Operator's Manual

IDEALARC® R3R-400

For use with machines having Code Numbers:

11839

GENUINE LINCOLN PARTS™

Register your machine:
www.lincolnelectric.com/register

Authorized Service and Distributor Locator:
www.lincolnelectric.com/locator

Save for future reference

Date Purchased

Code: (ex: 10859)

Serial: (ex: U1060512345)

IM10110 | Issue Date 11-Aug

© Lincoln Global, Inc. All Rights Reserved.

THE LINCOLN ELECTRIC COMPANY
22801 St. Clair Avenue • Cleveland, OH • 44117-1199 • U.S.A.
Phone: +1.216.481.8100 • www.lincolnelectric.com

THANK YOU FOR SELECTING A QUALITY PRODUCT BY LINCOLN ELECTRIC.

PLEASE EXAMINE CARTON AND EQUIPMENT FOR DAMAGE IMMEDIATELY

When this equipment is shipped, title passes to the purchaser upon receipt by the carrier. Consequently, claims for material damaged in shipment must be made by the purchaser against the transportation company at the time the shipment is received.

SAFETY DEPENDS ON YOU

Lincoln arc welding and cutting equipment is designed and built with safety in mind. However, your overall safety can be increased by proper installation ... and thoughtful operation on your part. **DO NOT INSTALL, OPERATE OR REPAIR THIS EQUIPMENT WITHOUT READING THIS MANUAL AND THE SAFETY PRECAUTIONS CONTAINED THROUGHOUT.** And, most importantly, think before you act and be careful.

⚠ WARNING

This statement appears where the information must be followed exactly to avoid serious personal injury or loss of life.

⚠ CAUTION

This statement appears where the information must be followed to avoid minor personal injury or damage to this equipment.

KEEP YOUR HEAD OUT OF THE FUMES.

DON'T get too close to the arc. Use corrective lenses if necessary to stay a reasonable distance away from the arc.

READ and obey the Safety Data Sheet (SDS) and the warning label that appears on all containers of welding materials.

USE ENOUGH VENTILATION or exhaust at the arc, or both, to keep the fumes and gases from your breathing zone and the general area.

IN A LARGE ROOM OR OUTDOORS, natural ventilation may be adequate if you keep your head out of the fumes (See below).

USE NATURAL DRAFTS or fans to keep the fumes away from your face.

If you develop unusual symptoms, see your supervisor. Perhaps the welding atmosphere and ventilation system should be checked.

WEAR CORRECT EYE, EAR & BODY PROTECTION

PROTECT your eyes and face with welding helmet properly fitted and with proper grade of filter plate (See ANSI Z49.1).

PROTECT your body from welding spatter and arc flash with protective clothing including woolen clothing, flame-proof apron and gloves, leather leggings, and high boots.

PROTECT others from splatter, flash, and glare with protective screens or barriers.

IN SOME AREAS, protection from noise may be appropriate.

BE SURE protective equipment is in good condition.

Also, wear safety glasses in work area **AT ALL TIMES.**

SPECIAL SITUATIONS

DO NOT WELD OR CUT containers or materials which previously had been in contact with hazardous substances unless they are properly cleaned. This is extremely dangerous.

DO NOT WELD OR CUT painted or plated parts unless special precautions with ventilation have been taken. They can release highly toxic fumes or gases.

Additional precautionary measures

PROTECT compressed gas cylinders from excessive heat, mechanical shocks, and arcs; fasten cylinders so they cannot fall.

BE SURE cylinders are never grounded or part of an electrical circuit.

REMOVE all potential fire hazards from welding area.

ALWAYS HAVE FIRE FIGHTING EQUIPMENT READY FOR IMMEDIATE USE AND KNOW HOW TO USE IT.

SECTION A: WARNINGS

CALIFORNIA PROPOSITION 65 WARNINGS

WARNING: Breathing diesel engine exhaust exposes you to chemicals known to the State of California to cause cancer and birth defects, or other reproductive harm.

- Always start and operate the engine in a well-ventilated area.
- If in an exposed area, vent the exhaust to the outside.
- Do not modify or tamper with the exhaust system.
- Do not idle the engine except as necessary.

For more information go to www.P65 warnings.ca.gov/diesel

WARNING: This product, when used for welding or cutting, produces fumes or gases which contain chemicals known to the State of California to cause birth defects and, in some cases, cancer. (California Health & Safety Code § 25249.5 *et seq.)*

WARNING: Cancer and Reproductive Harm www.P65warnings.ca.gov

ARC WELDING CAN BE HAZARDOUS. PROTECT YOURSELF AND OTHERS FROM POSSIBLE SERIOUS INJURY OR DEATH. KEEP CHILDREN AWAY. PACEMAKER WEARERS SHOULD CONSULT WITH THEIR DOCTOR BEFORE OPERATING.

Read and understand the following safety highlights. For additional safety information, it is strongly recommended that you purchase a copy of "Safety in Welding & Cutting - ANSI Standard Z49.1" from the American Welding Society, P.O. Box 351040, Miami, Florida 33135 or CSA Standard W117.2-1974. A Free copy of "Arc Welding Safety" booklet E205 is available from the Lincoln Electric Company, 22801 St. Clair Avenue, Cleveland, Ohio 44117-1199.

BE SURE THAT ALL INSTALLATION, OPERATION, MAINTENANCE AND REPAIR PROCEDURES ARE PERFORMED ONLY BY QUALIFIED INDIVIDUALS.

FOR ENGINE POWERED EQUIPMENT.

1.a. Turn the engine off before troubleshooting and maintenance work unless the maintenance work requires it to be running.

1.b. Operate engines in open, well-ventilated areas or vent the engine exhaust fumes outdoors.

1.c. Do not add the fuel near an open flame welding arc or when the engine is running. Stop the engine and allow it to cool before refueling to prevent spilled fuel from vaporizing on contact with hot engine parts and igniting. Do not spill fuel when filling tank. If fuel is spilled, wipe it up and do not start engine until fumes have been eliminated.

1.d. Keep all equipment safety guards, covers and devices in position and in good repair. Keep hands, hair, clothing and tools away from V-belts, gears, fans and all other moving parts when starting, operating or repairing equipment.

1.e. In some cases it may be necessary to remove safety guards to perform required maintenance. Remove guards only when necessary and replace them when the maintenance requiring their removal is complete. Always use the greatest care when working near moving parts.

1.f. Do not put your hands near the engine fan. Do not attempt to override the governor or idler by pushing on the throttle control rods while the engine is running.

1.g. To prevent accidentally starting gasoline engines while turning the engine or welding generator during maintenance work, disconnect the spark plug wires, distributor cap or magneto wire as appropriate.

1.h. To avoid scalding, do not remove the radiator pressure cap when the engine is hot.

ELECTRIC AND MAGNETIC FIELDS MAY BE DANGEROUS

2.a. Electric current flowing through any conductor causes localized Electric and Magnetic Fields (EMF). Welding current creates EMF fields around welding cables and welding machines

2.b. EMF fields may interfere with some pacemakers, and welders having a pacemaker should consult their physician before welding.

2.c. Exposure to EMF fields in welding may have other health effects which are now not known.

2.d. All welders should use the following procedures in order to minimize exposure to EMF fields from the welding circuit:

2.d.1. Route the electrode and work cables together - Secure them with tape when possible.

2.d.2. Never coil the electrode lead around your body.

2.d.3. Do not place your body between the electrode and work cables. If the electrode cable is on your right side, the work cable should also be on your right side.

2.d.4. Connect the work cable to the workpiece as close as possible to the area being welded.

2.d.5. Do not work next to welding power source.

ELECTRIC SHOCK CAN KILL.

3.a. The electrode and work (or ground) circuits are electrically "hot" when the welder is on. Do not touch these "hot" parts with your bare skin or wet clothing. Wear dry, hole-free gloves to insulate hands.

3.b. Insulate yourself from work and ground using dry insulation. Make certain the insulation is large enough to cover your full area of physical contact with work and ground.

In addition to the normal safety precautions, if welding must be performed under electrically hazardous conditions (in damp locations or while wearing wet clothing; on metal structures such as floors, gratings or scaffolds; when in cramped positions such as sitting, kneeling or lying, if there is a high risk of unavoidable or accidental contact with the workpiece or ground) use the following equipment:

- Semiautomatic DC Constant Voltage (Wire) Welder.
- DC Manual (Stick) Welder.
- AC Welder with Reduced Voltage Control.

3.c. In semiautomatic or automatic wire welding, the electrode, electrode reel, welding head, nozzle or semiautomatic welding gun are also electrically "hot".

3.d. Always be sure the work cable makes a good electrical connection with the metal being welded. The connection should be as close as possible to the area being welded.

3.e. Ground the work or metal to be welded to a good electrical (earth) ground.

3.f. Maintain the electrode holder, work clamp, welding cable and welding machine in good, safe operating condition. Replace damaged insulation.

3.g. Never dip the electrode in water for cooling.

3.h. Never simultaneously touch electrically "hot" parts of electrode holders connected to two welders because voltage between the two can be the total of the open circuit voltage of both welders.

3.i. When working above floor level, use a safety belt to protect yourself from a fall should you get a shock.

3.j. Also see Items 6.c. and 8.

ARC RAYS CAN BURN.

4.a. Use a shield with the proper filter and cover plates to protect your eyes from sparks and the rays of the arc when welding or observing open arc welding. Headshield and filter lens should conform to ANSI Z87. I standards.

4.b. Use suitable clothing made from durable flame-resistant material to protect your skin and that of your helpers from the arc rays.

4.c. Protect other nearby personnel with suitable, non-flammable screening and/or warn them not to watch the arc nor expose themselves to the arc rays or to hot spatter or metal.

FUMES AND GASES CAN BE DANGEROUS.

5.a. Welding may produce fumes and gases hazardous to health. Avoid breathing these fumes and gases. When welding, keep your head out of the fume. Use enough ventilation and/or exhaust at the arc to keep fumes and gases away from the breathing zone. **When welding hardfacing (see instructions on container or SDS) or on lead or cadmium plated steel and other metals or coatings which produce highly toxic fumes, keep exposure as low as possible and within applicable OSHA PEL and ACGIH TLV limits using local exhaust or mechanical ventilation unless exposure assessments indicate otherwise. In confined spaces or in some circumstances, outdoors, a respirator may also be required. Additional precautions are also required when welding on galvanized steel.**

5. b. The operation of welding fume control equipment is affected by various factors including proper use and positioning of the equipment, maintenance of the equipment and the specific welding procedure and application involved. Worker exposure level should be checked upon installation and periodically thereafter to be certain it is within applicable OSHA PEL and ACGIH TLV limits.

5.c. Do not weld in locations near chlorinated hydrocarbon vapors coming from degreasing, cleaning or spraying operations. The heat and rays of the arc can react with solvent vapors to form phosgene, a highly toxic gas, and other irritating products.

5.d. Shielding gases used for arc welding can displace air and cause injury or death. Always use enough ventilation, especially in confined areas, to insure breathing air is safe.

5.e. Read and understand the manufacturer's instructions for this equipment and the consumables to be used, including the Safety Data Sheet (SDS) and follow your employer's safety practices. SDS forms are available from your welding distributor or from the manufacturer.

5.f. Also see item 1.b.

WELDING AND CUTTING SPARKS CAN CAUSE FIRE OR EXPLOSION.

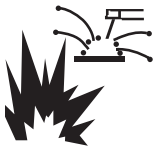

6.a. Remove fire hazards from the welding area. If this is not possible, cover them to prevent the welding sparks from starting a fire. Remember that welding sparks and hot materials from welding can easily go through small cracks and openings to adjacent areas. Avoid welding near hydraulic lines. Have a fire extinguisher readily available.

6.b. Where compressed gases are to be used at the job site, special precautions should be used to prevent hazardous situations. Refer to “Safety in Welding and Cutting” (ANSI Standard Z49.1) and the operating information for the equipment being used.

6.c. When not welding, make certain no part of the electrode circuit is touching the work or ground. Accidental contact can cause overheating and create a fire hazard.

6.d. Do not heat, cut or weld tanks, drums or containers until the proper steps have been taken to insure that such procedures will not cause flammable or toxic vapors from substances inside. They can cause an explosion even though they have been “cleaned”. For information, purchase “Recommended Safe Practices for the Preparation for Welding and Cutting of Containers and Piping That Have Held Hazardous Substances”, AWS F4.1 from the American Welding Society (see address above).

6.e. Vent hollow castings or containers before heating, cutting or welding. They may explode.

6.f. Sparks and spatter are thrown from the welding arc. Wear oil free protective garments such as leather gloves, heavy shirt, cuffless trousers, high shoes and a cap over your hair. Wear ear plugs when welding out of position or in confined places. Always wear safety glasses with side shields when in a welding area.

6.g. Connect the work cable to the work as close to the welding area as practical. Work cables connected to the building framework or other locations away from the welding area increase the possibility of the welding current passing through lifting chains, crane cables or other alternate circuits. This can create fire hazards or overheat lifting chains or cables until they fail.

6.h. Also see item 1.c.

6.I. Read and follow NFPA 51B “Standard for Fire Prevention During Welding, Cutting and Other Hot Work”, available from NFPA, 1 Batterymarch Park, PO box 9101, Quincy, MA 022690-9101.

6.j. Do not use a welding power source for pipe thawing.

CYLINDER MAY EXPLODE IF DAMAGED.

7.a. Use only compressed gas cylinders containing the correct shielding gas for the process used and properly operating regulators designed for the gas and pressure used. All hoses, fittings, etc. should be suitable for the application and maintained in good condition.

7.b. Always keep cylinders in an upright position securely chained to an undercarriage or fixed support.

7.c. Cylinders should be located:

- Away from areas where they may be struck or subjected to physical damage.
- A safe distance from arc welding or cutting operations and any other source of heat, sparks, or flame.

7.d. Never allow the electrode, electrode holder or any other electrically “hot” parts to touch a cylinder.

7.e. Keep your head and face away from the cylinder valve outlet when opening the cylinder valve.

7.f. Valve protection caps should always be in place and hand tight except when the cylinder is in use or connected for use.

7.g. Read and follow the instructions on compressed gas cylinders, associated equipment, and CGA publication P-I, “Precautions for Safe Handling of Compressed Gases in Cylinders,” available from the Compressed Gas Association, 14501 George Carter Way Chantilly, VA 20151.

FOR ELECTRICALLY POWERED EQUIPMENT.

8.a. Turn off input power using the disconnect switch at the fuse box before working on the equipment.

8.b. Install equipment in accordance with the U.S. National Electrical Code, all local codes and the manufacturer’s recommendations.

8.c. Ground the equipment in accordance with the U.S. National Electrical Code and the manufacturer’s recommendations.

Refer to http://www.lincolnelectric.com/safety for additional safety information.

PRÉCAUTIONS DE SÛRETÉ

Pour votre propre protection lire et observer toutes les instructions et les précautions de sûreté specifiques qui parraissent dans ce manuel aussi bien que les précautions de sûreté générales suivantes:

Sûreté Pour Soudage A L'Arc

1. Protegez-vous contre la secousse électrique:

   a. Les circuits à l'électrode et à la piéce sont sous tension quand la machine à souder est en marche. Eviter toujours tout contact entre les parties sous tension et la peau nue ou les vétements mouillés. Porter des gants secs et sans trous pour isoler les mains.
   b. Faire trés attention de bien s'isoler de la masse quand on soude dans des endroits humides, ou sur un plancher metallique ou des grilles metalliques, principalement dans les positions assis ou couché pour lesquelles une grande partie du corps peut être en contact avec la masse.
   c. Maintenir le porte-électrode, la pince de masse, le câble de soudage et la machine à souder en bon et sûr état defonctionnement.
   d.Ne jamais plonger le porte-électrode dans l'eau pour le refroidir.
   e. Ne jamais toucher simultanément les parties sous tension des porte-électrodes connectés à deux machines à souder parce que la tension entre les deux pinces peut être le total de la tension à vide des deux machines.
   f. Si on utilise la machine à souder comme une source de courant pour soudage semi-automatique, ces precautions pour le porte-électrode s'applicuent aussi au pistolet de soudage.

2. Dans le cas de travail au dessus du niveau du sol, se protéger contre les chutes dans le cas ou on recoit un choc. Ne jamais enrouler le câble-électrode autour de n'importe quelle partie du corps.

3. Un coup d'arc peut être plus sévère qu'un coup de soliel, donc:

   a. Utiliser un bon masque avec un verre filtrant approprié ainsi qu'un verre blanc afin de se protéger les yeux du rayonnement de l'arc et des projections quand on soude ou quand on regarde l'arc.
   b. Porter des vêtements convenables afin de protéger la peau de soudeur et des aides contre le rayonnement de l'arc.
   c. Protéger l'autre personnel travaillant à proximité au soudage à l'aide d'écrans appropriés et non-inflammables.

4. Des gouttes de laitier en fusion sont émises de l'arc de soudage. Se protéger avec des vêtements de protection libres de l'huile, tels que les gants en cuir, chemise épaisse, pantalons sans revers, et chaussures montantes.

5. Toujours porter des lunettes de sécurité dans la zone de soudage. Utiliser des lunettes avec écrans lateraux dans les zones où l'on pique le laitier.

6. Eloigner les matériaux inflammables ou les recouvrir afin de prévenir tout risque d'incendie dû aux étincelles.

7. Quand on ne soude pas, poser la pince à une endroit isolé de la masse. Un court-circuit accidental peut provoquer un échauffement et un risque d'incendie.

8. S'assurer que la masse est connectée le plus prés possible de la zone de travail qu'il est pratique de le faire. Si on place la masse sur la charpente de la construction ou d'autres endroits éloignés de la zone de travail, on augmente le risque de voir passer le courant de soudage par les chaines de levage, câbles de grue, ou autres circuits. Cela peut provoquer des risques d'incendie ou d'echauffement des chaines et des câbles jusqu'à ce qu'ils se rompent.

9. Assurer une ventilation suffisante dans la zone de soudage. Ceci est particuliérement important pour le soudage de tôles galvanisées plombées, ou cadmiées ou tout autre métal qui produit des fumeés toxiques.

10. Ne pas souder en présence de vapeurs de chlore provenant d'opérations de dégraissage, nettoyage ou pistolage. La chaleur ou les rayons de l'arc peuvent réagir avec les vapeurs du solvant pour produire du phosgéne (gas fortement toxique) ou autres produits irritants.

11. Pour obtenir de plus amples renseignements sur la sûreté, voir le code "Code for safety in welding and cutting" CSA Standard W 117.2-1974.

PRÉCAUTIONS DE SÛRETÉ POUR LES MACHINES À SOUDER À TRANSFORMATEUR ET À REDRESSEUR

1. Relier à la terre le chassis du poste conformement au code de l'électricité et aux recommendations du fabricant. Le dispositif de montage ou la piece à souder doit être branché à une bonne mise à la terre.

2. Autant que possible, l'installation et l'entretien du poste seront effectués par un électricien qualifié.

3. Avant de faires des travaux à l'interieur de poste, la debrancher à l'interrupteur à la boite de fusibles.

4. Garder tous les couvercles et dispositifs de sûreté à leur place.

TABLE OF CONTENTS

Page

Installation . . . . . Section A
Location and Stacking A-1
Input Wiring A-1
Output Connections A-2

Operating Instructions . . . . . Section B

Maintenance . . . . . Section D

Troubleshooting . . . . . Section E
Troubleshooting Procedures . . . . . E-1 thru E-10

Wiring Diagrams . . . . . Section F

Parts Lists . . . . . P-689 SERIES

LOCATION AND STACKING

⚠ WARNING

FALLING EQUIPMENT can cause injury.

- **Do not lift this machine using lift bail if it is equipped with a heavy accessory such as trailer or gas cylinder.**
- **Lift only with equipment of adequate lifting capacity.**
- **Be sure machine is stable when lifting.**

Install the welder in a dry location where there is a free circulation of air in through the front louvers and out the back of the case. A location which minimizes the amount of smoke and dirt drawn into the front louvers reduces the chance of dirt accumulation that can block air passages, causing overheating and nuisance shutdown of the machine.

The Idealarc® R3R welders can be stacked three high when the following precautions are observed:

1. Be sure the bottom machine is on a firm, level surface suitable for the total weight {up to 1350 pounds (608 Kg)} of the stacked machines.

2. Stack the machines with the fronts flush. Be certain the pins on the top front corners of the lower machines fit through the holes in the base rails of the upper machines.

3. No unit heavier than the bottom unit should be stacked on top of it. For example, an R3R-500 shall not be stacked on top of an R3R-400, but an R3R-400 may be stacked on top of an R3R-500.

INPUT WIRING

⚠ WARNING

ELECTRIC SHOCK can kill.

- **Have an electrician install and service this equipment.**
- **Turn the input power off at the fuse box before working on equipment.**
- **Do not touch electrically hot parts.**

Dual or triple voltage (eg: 230/460, 220/380/440, etc.) models are shipped connected for highest voltage. To change the connection, see the wiring or connection diagram pasted to the inside of the access panel in the case back.

Be sure the voltage, phase and frequency of the input power is as specified on the welder nameplate.

Have a qualified electrician remove the access panel in the case back and connect the three phase AC power to terminals L_1, L_2, L_3 of the input contactor in accordance with the U. S. National Electrical Code, all local codes, and the wiring diagram located inside the machine.

The welder frame must be grounded. A stud marked with the symbol ⏚ located on the floor of the input box is provided for this purpose. See the U.S. National Electrical Code for details on proper grounding methods.

Recommended Input Wire, Ground Wire and Fuse Sizes Based on U.S. National Electrical Code. For 60 hertz, 3 phase Welders at 60% Duty Cycle.

Welder	Input Volts	Amps Input	Copper Wire Size Type 75°C in Conduit: 3 Input Wires	Copper Wire Size Type 75°C in Conduit: 1 Ground Wire	Super Lag Fuse Size in Amps
400	230	82.0	6	6	125
	460	41.0	10	10	60

This welder is rated for 60% duty cycle. Duty cycle is based on a ten minute period. Therefore, the welder can be operated at nameplate rated output for 6 minutes of every 10 minute period without overheating. An amber high temperature warning light provides a visual indication of an over temperature condition.

⚠ CAUTION

Failure to follow these instructions can cause immediate failure of components within the machine.

When powering welder from a generator be sure to turn off welder first, before generator is shut down, in order to prevent damage to welder!

OUTPUT CONNECTIONS

OUTPUT STUDS

With the machine off, run electrode and work cables of the appropriate sizes (see the following table) up through the rectangular holes in the machine base located below the output studs. Connect the cable lugs to the output terminals marked (+) and (-) or, if the welder comes equipped with the polarity switch option “electrode” and “to work”. Tighten the holding nuts with a wrench.

Cable Sizes for Combined Length of Electrode and Work Cable (Copper) at 60% Duty Cycle

Machine Size	Up to 100 ft. (30 m)	100 to 150 ft. (30 – 46 m)	150 to 200 ft. (46 – 61 m)	200 to 250 ft. (61 – 76 m)
400	2/0 (68 mm^2)	2/0 (68 mm^2)	3/0 (86 mm^2)	4/0 (108 mm^2)

CONNECTION OF OPTIONAL REMOTE CONTROL – K857

Turn the machine off. The K857 consists of a control box with 28 feet (8.5m) of four conductor cable and a 6 pin connector for easy connection to the power source. This control will give the same control as the current control on the machine depending on the position of the current dial selector switch.

⚠ CAUTION

Extreme care must be observed when installing or extending the wiring of a remote control. The remote control cord can be lengthened to any length by splicing four wires to the standard 28 ft. (8.5m) cord before connecting to the R3R terminal strip. Only the green lead can and should be grounded to the machine case.

When extending the standard remote control make sure the leads are the same and the splice is water-proof. Don’t let the lugs touch against the case.

OPTIONAL K963 HAND AMPTROL AND K870 FOOT AMPTROL

These amptrols connect directly to the 6-pin connector on the front of the power source.

TIG WELDING

The R3R is shipped with proper R.F. By-pass circuitry installed to protect the control circuit when TIG welding with a Hi-Freq™ unit. **To provide protection, the welder frame grounding stud must be connected to ground.**

⚠ WARNING

ELECTRIC SHOCK can kill.

- **Do not touch electrically live parts or electrode with skin or wet clothing.**
- **Insulate yourself from work and ground.**
- **Always wear dry insulating gloves.**

FUMES AND GASES can be dangerous.

- **Keep your head out of fumes.**
- **Use ventilation or exhaust to remove fumes from breathing zone.**

WELDING SPARKS can cause fire or explosion.

- **Keep flammable material away.**
- **Do not weld on containers that have held combustibles.**

ARC RAYS can burn.

- **Wear eye, ear and body protection.**

NOTE: The P.C. Board is protected by a moisture resistant coating. When the welder is operated, this coating will “bake off” of certain power resistors that normally operate at high temperatures, emitting some smoke and odor for a short time. These resistors and the P.C. Board beneath them may become blackened. This is a normal occurrence and does not damage the component or affect the machine performance.

1. To Start the Welder, move the “Power” switch to “On”. This starts the welder and lights the white pilot light on the machine control panel. This light indicates that the line contactor is energized).

2. Setting Welding Current

   a. The “Current Control” dial on the front of the machine indicates the output current at the NEMA arc voltage.

      On the R3R-400 two dials are used, The “A” range controls the current over about 1/2 of the range of the “B” range. A toggle switch on the control panel allows selection of the desired range. The output control can be adjusted while welding.

   b. Provisions for remote control are standard on each power source. A current control switch on the machine control panel labeled “Current Control at R3R” or “Current Control Remote” is provided for selecting the desired mode of operation, either at the machine or remote, Be certain the machine remote switch is in the machine position, unless a remote control is connected, or the R3R is equipped with optional pocket amptrol.

   c. The “Arc Force Control”, located on the right side of the front control panel, is calibrated from one to ten. Lower settings will provide less short circuit current and a softer arc. A setting that is too low may cause the electrode to stick in the puddle. Higher settings will provide a higher short circuit current, a more forceful arc, and possibly more spatter. For most welding, the dial should be set at approximately mid range (5 – 6). Adjustment up or down can then be made depending on the electrode, procedures, and operator preference. For most TIG welding applications adjust this control to minimum for best operating characteristics.

OPTIONAL EQUIPMENT

1. Remote Current Control – See “Operation”.

2. Amptrol – See “Operation”.

3. Polarity Switch (Factory Installed Only). Permits changing polarity at the machine output terminals. (See also “Output Connections”.)

4. Meters – Ammeter and Voltmeter (Factory Installed Only)

RATINGS

Transformer insulation class 155(F)
IP21 enclosure protection

⚠ WARNING

ELECTRIC SHOCK can kill.

- **Have an electrician install and service this equipment.**
- **Turn the input power off at the fuse box before working on equipment.**
- **Do not touch electrically hot parts.**

GENERAL MAINTENANCE

1. The fan motor has sealed bearings which require no service.

2. In extremely dusty locations, dirt may clog the air channels causing the welder to run hot. Blow out the welder at regular intervals. The side panels can be removed even when the machines are stacked.

POWER RECTIFIER REPLACEMENT

Refer to the troubleshooting section “Power Rectifier Bridge Assembly Checking Procedure” if a rectifier failure is suspected.

NOTE: Since proper material and correct assembly procedures are critical, field disassembly of the power rectifier bridge sections can do more harm than good. Return a defective rectifier bridge section (or the entire bridge) to the factory for repairs.

HOW TO USE TROUBLESHOOTING GUIDE

⚠ WARNING

Service and Repair should only be performed by Lincoln Electric Factory Trained Personnel. Unauthorized repairs performed on this equipment may result in danger to the technician and machine operator and will invalidate your factory warranty. For your safety and to avoid Electrical Shock, please observe all safety notes and precautions detailed throughout this manual.

This Troubleshooting Guide is provided to help you locate and repair possible machine malfunctions. Simply follow the three-step procedure listed below.

Step 1. LOCATE PROBLEM (SYMPTOM).
Look under the column labeled "PROBLEM (SYMPTOMS)". This column describes possible symptoms that the machine may exhibit. Find the listing that best describes the symptom that the machine is exhibiting.

Step 2. POSSIBLE CAUSE.
The second column labeled "POSSIBLE CAUSE" lists the obvious external possibilities that may contribute to the machine symptom.

Step 3. RECOMMENDED COURSE OF ACTION

This column provides a course of action for the Possible Cause, generally it states to contact your local Lincoln Authorized Field Service Facility.

If you do not understand or are unable to perform the Recommended Course of Action safely, contact your local Lincoln Authorized Field Service Facility.

⚠ WARNING

ELECTRIC SHOCK can kill.
- **Do not touch electrically hot parts.**
- **Have an electrician install and service this equipment.**
- **Turn the input power off at the fuse box before working on equipment.**

⚠ CAUTION

If for any reason you do not understand the test procedures or are unable to perform the tests/repairs safely, contact your **Local Lincoln Authorized Field Service Facility** for technical troubleshooting assistance before you proceed.

Observe all Safety Guidelines detailed througout this manual

PROBLEMS (SYMPTOMS)	POSSIBLE CAUSE	RECOMMENDED COURSE OF ACTION
FUNCTION PROBLEMS		
Input contactor chatters.	1.Faulty input contactor. 2.Low line voltage.	If all recommended possible areas of misadjustment have been checked and the problem persists, **Contact your local Lincoln Authorized Field Service Facility.**
Machine input contactor does not operate.	1.Supply line fuse blown. 2.Power circuit dead. 3.Broken or loose power lead. 4.Wrong voltage. 5.Thermostats tripped. (High Temperature Warning Light should be lit.) (Welder overheated.) 6.Input contactor coil open. 7.Open winding on 115V pilot transformer. 8.Power ON-OFF switch not closing. 9.Lead broken or loose connection in 115V starter circuit. 10.Thermostats defective. (High Temperature Warning Light should be lit.)	

⚠ CAUTION

If for any reason you do not understand the test procedures or are unable to perform the tests/repairs safely, contact your **Local Lincoln Authorized Field Service Facility** for technical troubleshooting assistance before you proceed.

Observe all Safety Guidelines detailed througout this manual

PROBLEMS (SYMPTOMS)	POSSIBLE CAUSE	RECOMMENDED COURSE OF ACTION
FUNCTION PROBLEMS		
Machine input contactor closes but has no or low output. Open circuit voltage should be 67 to 71 volts.	1. Electrode or work lead loose or broken. 2. Open transformer primary or secondary circuit. 3. Supply line fuse blown. 4. Input line grounded causing single phase input. 5. Input leads not connected to contactor. 6. Latching resistor, R3, open. 7. Control circuit problems.	If all recommended possible areas of misadjustment have been checked and the problem persists, **Contact your local Lincoln Authorized Field Service Facility.**
Machine has maximum output but no control.	1. Possible defective power SCR. 2. Possible defective control board.	

⚠ CAUTION

If for any reason you do not understand the test procedures or are unable to perform the tests/repairs safely, contact your **Local Lincoln Authorized Field Service Facility** for technical troubleshooting assistance before you proceed.

Observe all Safety Guidelines detailed througout this manual

PROBLEMS (SYMPTOMS)	POSSIBLE CAUSE	RECOMMENDED COURSE OF ACTION
FUNCTION PROBLEMS		
Machine does not have maximum output (67 to 71 volts).	1. Input fuse blown. Machine is single phased. 2. One phase of main transformer windings open. 3. Defective power bridge.	If all recommended possible areas of misadjustment have been checked and the problem persists, **Contact your local Lincoln Authorized Field Service Facility.**
Machine comes on but soon trips off while under load and High Temperature Warning Light glows. (Thermostat tripped)	1. Improper ventilation. 2. Loaded beyond rating. 3. Fan inoperative. 4. Shorted diode or SCR in power rectifier bridge.	
Machine comes on but reduces to low output under load and remains there until the load is broken and arc re-started. See Fault Protection Operation Section.	1. Excessive load causing the over-load protection on control board to operate. 2. Machine output shorted causing overload protection on control board to operate. 3. Control circuit defective.	

⚠ CAUTION

If for any reason you do not understand the test procedures or are unable to perform the tests/repairs safely, contact your **Local Lincoln Authorized Field Service Facility** for technical troubleshooting assistance before you proceed.

Observe all Safety Guidelines detailed througout this manual

PROBLEMS (SYMPTOMS)	POSSIBLE CAUSE	RECOMMENDED COURSE OF ACTION
FUNCTION PROBLEMS		
Machine trips off when under no load or makes excessive noise like it is loaded.	1. Power bridge rectifier may have a shorted diode or SCR. 2. Short in the transformer. 3. Fan hitting vertical baffle.	If all recommended possible areas of misadjustment have been checked and the problem persists, **Contact your local Lincoln Authorized Field Service Facility.**
Variable or sluggish welding arc.	1. Poor work or electrode cable connection. 2. Current too low. 3. Welding leads too small. 4. Open SCR or diode in power rectifier bridge. 5. Control circuit problems.	
Welder will not shut off.	1. Input contactor contacts frozen.	
115VAC Receptacle not working.	1. Circuit Breaker Tripped. 2. Defective Cicuit Breaker. 3. Broken connectionin wiring.	

⚠ CAUTION

If for any reason you do not understand the test procedures or are unable to perform the tests/repairs safely, contact your **Local Lincoln Authorized Field Service Facility** for technical troubleshooting assistance before you proceed.

Observe all Safety Guidelines detailed througout this manual

PROBLEMS (SYMPTOMS)	POSSIBLE CAUSE	RECOMMENDED COURSE OF ACTION
FUNCTION PROBLEMS		
Current control on machine not functioning.	1. Current control switch in wrong position. 2. Current control switch defective. 3. Current control potentiometer defective. 4. Lead or connection in control circuit open. 5. Defective control or circuit boards.	If all recommended possible areas of misadjustment have been checked and the problem persists, **Contact your local Lincoln Authorized Field Service Facility.**
Optional remote current control not functioning. See Troubleshooting Procedures before connecting.	1. Current control switch in the wrong position. 2. Leads 75, 76 and 77 not connected to correct numbers on models with terminal strip. 3. Remove control leads broken. 4. Remote control potentiometer open. 5. Lead or connection in current control circuit open. 6. Control PC board plug disconnected or loose. 7. Control circuit problems.	

⚠ CAUTION

If for any reason you do not understand the test procedures or are unable to perform the tests/repairs safely, contact your **Local Lincoln Authorized Field Service Facility** for technical troubleshooting assistance before you proceed.

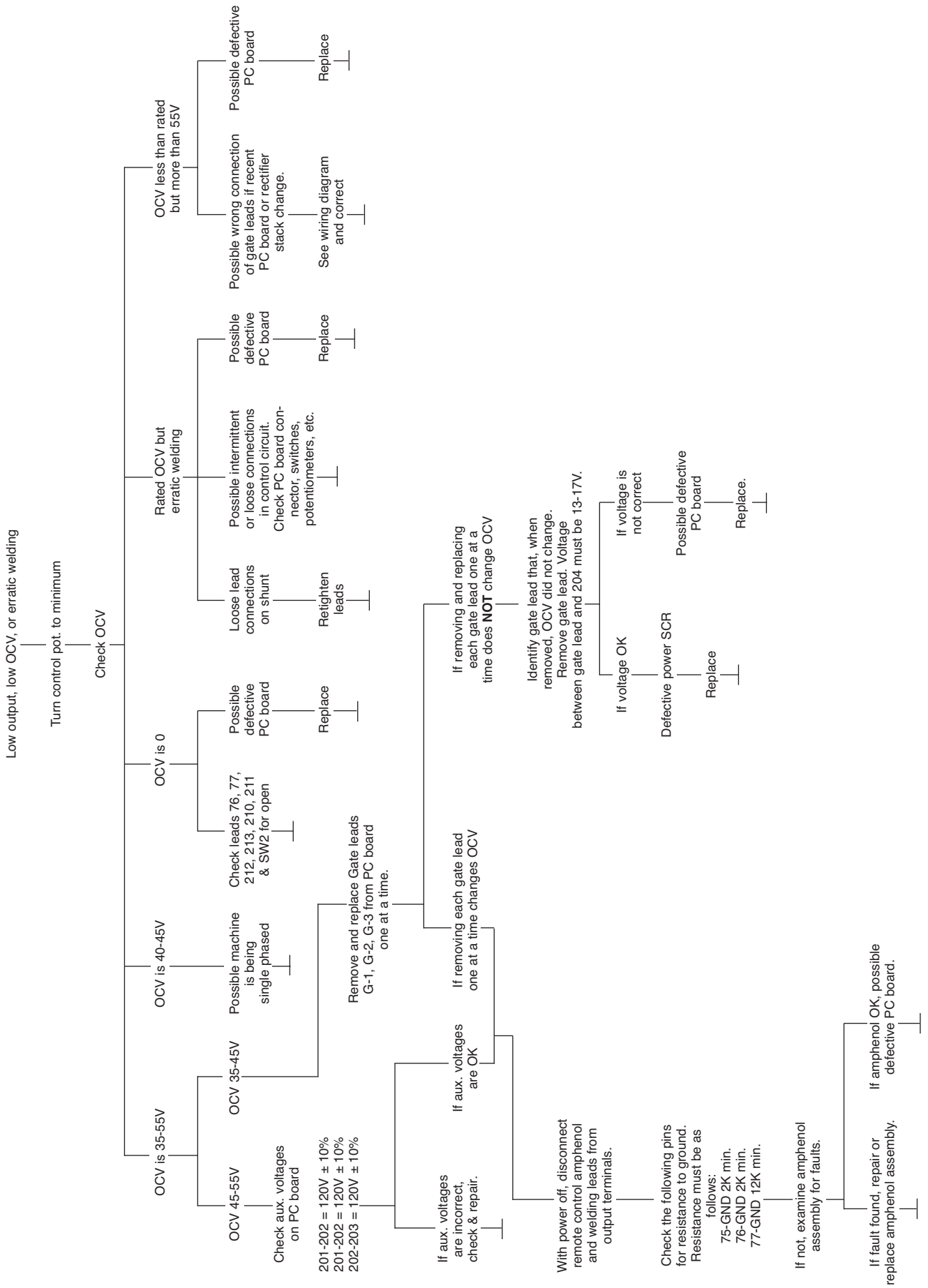
Low output, low OCV, or erratic welding
Turn control pot. to minimum
Check OCV
OCV less than rated but more than 55V
Possible defective PC board
Replace
Possible wrong connection of gate leads if recent PC board or rectifier stack change.
See wiring diagram and correct
Rated OCV but erratic welding
Possible defective PC board
Replace
Possible intermittent or loose connections in control circuit. Check PC board connector, switches, potentiometers, etc.
Loose lead connections on shunt
Retighten leads
OCV is 0
Possible defective PC board
Replace
Check leads 76, 77, 212, 213, 210, 211 & SW2 for open
OCV is 40-45V
Possible machine is being single phased
OCV is 35-55V
OCV 35-45V
OCV 45-55V
Check aux. voltages on PC board
201-202 = 120V ± 10%
201-202 = 120V ± 10%
202-203 = 120V ± 10%
Remove and replace Gate leads G-1, G-2, G-3 from PC board one at a time.
If aux. voltages are incorrect, check & repair.
If aux. voltages are OK
If removing each gate lead one at a time changes OCV
If removing and replacing each gate lead one at a time does NOT change OCV
Identify gate lead that, when removed, OCV did not change. Remove gate lead. Voltage between gate lead and 204 must be 13-17V.
If voltage OK
Defective power SCR
Replace
If voltage is not correct
Possible defective PC board
Replace.
With power off, disconnect remote control amphenol and welding leads from output terminals.
Check the following pins for resistance to ground. Resistance must be as follows:
75-GND 2K min.
76-GND 2K min.
77-GND 12K min.
If not, examine amphenol assembly for faults.
If amphenol OK, possible defective PC board.
If fault found, repair or replace amphenol assembly.

TROUBLESHOOTING PROCEDURES

PROCEDURE FOR REPLACING P.C. BOARD

(The P.C. Board is located behind the front control panel. Remove the nameplate screws to loosen the control panel.)

When the P.C. Board is to be replaced, follow this procedure:

Visually inspect P.C. Board in question. Are any of the components damaged? Is a conductor on the back side of the board damaged?

1. If there is no damage to the P.C. Board, insert a new one and see if this remedies the problem. If the problem is remedied, re-insert the old P.C. Board and see if the problem still exists with the old P.C. Board.

   a. If the problem does not exist with the old board, check the harness plug and P.C. Board plug for corrosion, contamination, or oversize.

   b. Check leads in the harness for loose connections.

2. If there is damage to the P.C. Board, refer to the Troubleshooting Guide.

OUTPUT VOLTAGE

The open circuit voltage of the machine should be 67 to 71 volts and should not vary when the rheostat is varied. If any other condition exists, refer to the Troubleshooting Guide.

OVERLOAD PROTECTION

All IDEALARC® R3R-400s have built-in protective thermostats. If the rectifier or transformer reaches the maximum safe operating temperature because of frequent overload or high room temperature plus overload, the line contactor drops out stopping the welder. The thermostats automatically reset and the line contactor pulls in when the temperature reaches a safe operating level.

The power rectifier bridge is also protected against short term, high current overloads generally caused by poor operating techniques.

For example, if an arc gouging carbon or the electrode is allowed to touch – or almost touch – the work for a couple of seconds or more, the overload protection P.C. Board automatically reduces the output to minimum and keeps it there until the overload is removed or the machine is turned off.

CHECKING SNUBBER CIRCUIT

In case of an SCR malfunction or failure, the snubber assembly should be checked. Turn the machine off and disconnect one lead of the snubber assembly. (Either 221, 222, or 223 depending on the SCR in question. See wiring diagram.) The sides of the machine have to be removed to do this. (See parts list for the exact location.)

1. Visually inspect the snubber assembly for overheated components.

2. Using a V.O.M meter on the X10 scale connect the positive lead to the lead removed. Touch the negative lead to the shunt. The indicating needle on the meter will move quickly to the right (low resistance value) and then slowly return to the left (high resistance value). This indicates that the capacitor in the snubber circuit is taking a charge.

3. If the needle stays to the right, the capacitor is shorted and the assembly is defective.

4. If the needle does not move, the capacitor or resistor on the snubber assembly is open and the assembly is defective.

CHECKING CURRENT CONTROL RHEOSTAT ON MACHINE

Turn the machine off.

Remove the control panel screws and open the front cover.

Turn the current control switch to remote.

Disconnect the harness plug from the control board.

Put current range switch to “B” range.

With an ohmmeter on X1K, connect it to lead 210 and 211 on SW #2.

Rotate the current control rheostat. The resistance reading should be from around zero to 10K ohms. Check the resistance reading between 75 on the terminal strip and 211 on SW #2. The reading must be 10K ohms.

No reading will indicate an open rheostat and a low reading will indicate a shorted or partially shorted rheostat; in either case, replace.

TOGGLE SWITCH CHECK

1. Turn off the machine power input. SW #1 has 115 volts across it when the input power is connected.
2. Isolate the switch to be tested by removing all connecting leads.
3. Check to make sure the switch is making connections with a V.O.M. meter. The meter should read zero resistance.
4. Put the ohmmeter on X1K scale and measure the resistance between the terminal and the case of the machine (touch a self tapping screw). Reading should be infinite.
5. If either step (3) or step (4) fails, replace the switch.

REMOTE CONTROL CHECK

Disconnect the remote field control and connect an ohmmeter across 75 and 76 and rotate the rheostat in the remote control. The resistance reading should go from zero to 10K ohms. Repeat with ohmmeter across 77 and 76 with same results. Connect ohmmeter across 75 and 77. The reading should be 10K ohms. A lower reading will indicate a shorted or partially shorted rheostat. A very high reading will indicate an open rheostat. In either of the last two cases, replace the rheostat. Check for any physical damage.

CHECKING POWER RECTIFIER BRIDGE ASSEMBLY

⚠ CAUTION

Precise evaluation of diodes or SCRs require laboratory equipment. If a bridge problem still exists after test, please call a Lincoln Field Service Shop.

Equipment Needed:

1. V.O.M. or ohmmeter for diodes
2. Circuit Diagram 1 for SCRs

   DEVICE ISOLATION (See the instruction manual parts list for the exact location.)
   Disconnect the following leads from the bridge, shown in Diagram 2:

   1. Wiring harness gate leads (G1, G2, G3) from gate lead connector J4 on control P.C. Board
   2. AC leads X1, X2, and X3 from the anodes of the SCRs and cathodes of the diodes.
   3. The 200, 221, 222, and 223 leads from the Snubber P.C. Board.
   4. Lead 220 that connects to the latching resistor (R3).
   5. The cathode of each diode (4 total).

POWER DIODE TEST

1. Establish the polarity of the ohmmeter leads and set to the X10 scale.
2. Connect the ohmmeter positive led to anode and negative lead to the cathode.
3. Reverse the leads of the ohmmeter from Step 2.
4. A shorted diode will indicate zero or an equally low resistance in both directions. An open diode will have an infinite or high resistance in both directions; and a good diode will have a low resistance in Step 2 and a much higher resistance in Step 3.

POWER SILICON CONTROLLED RECTIFIER TEST

The SCR must be mounted in the heat sink when making this test.

1. Connect the ohmmeter (set to the X10 scale) leads to the anode and cathode.
2. Reverse the leads of the ohmmeter from Step 1.
3. A shorted SCR will indicate zero or an equally low resistance in one or both directions.
4. Establish the polarity of the ohmmeter. Connect the positive lead to the gate and the negative lead to the cathode.
5. An open gate circuit will have an infinite or high resistance. A good gate circuit will read a low resistance, but not zero ohms.

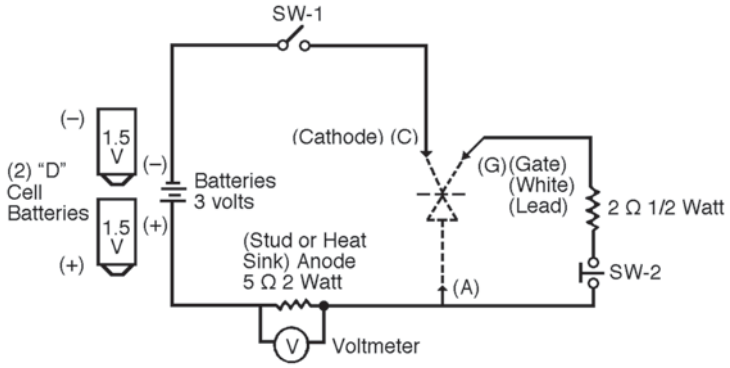

DIAGRAM 1

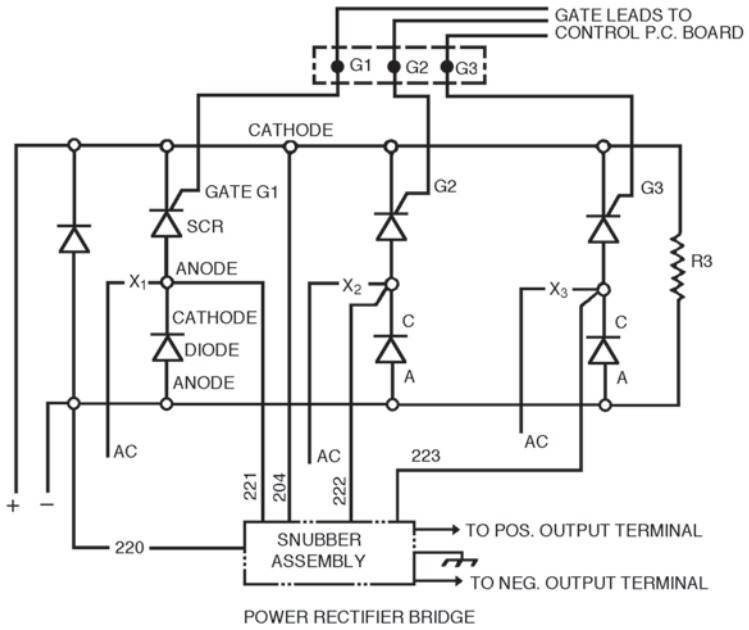

DIAGRAM 2

BATTERY TEST

Check the batteries by shorting leads (A) and (C), then close switch SW-1. Replace batteries if voltage is less than 3 volts.

SCR TEST

1. Isolate SCR to be tested by disconnecting gate leads from the terminals on the P. C. Board. (Do not remove SCR from the heat sink.)

2. Connect SCR into the test circuit as shown (A) lead to anode (C) lead to cathode and (G) lead to the gate.

3. Close switch SW #1 (switch SW#2 should be open); voltmeter should read zero. If the voltmeter reads higher than zero, the SCR is shorted.

4. With switch SW #1 closed, close switch SW #2 for two seconds and release. The voltmeter should read 2 to 2.5 volts before and after switch SW #2 is released. If the voltmeter does not read, or reads only while SW #2 is depressed, the SCR is open or batteries are defective (repeat Battery Test Procedure).

5. Open switch SW #1, disconnect the gate lead (G) and reverse the (A) and (C) leads on the SCR. Close switch SW #1. The voltmeter should read zero. If the voltage is higher than zero, the SCR is shorted.

IDEALARC R3R-400 & 500-I WIRING DIAGRAM

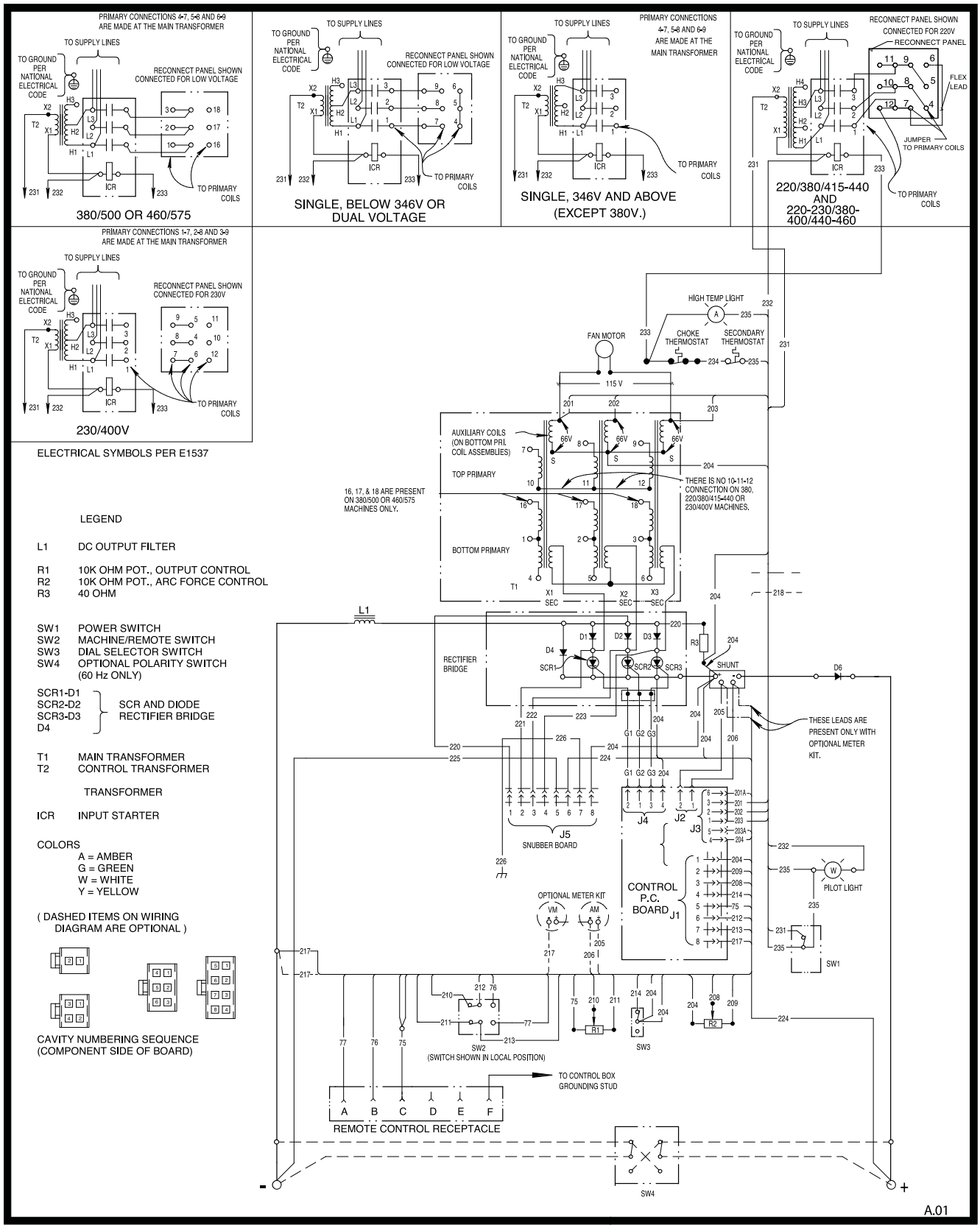

L9376-1

NOTE: This diagram is for reference only. It may not be accurate for all machines covered by this manual. The specific diagram for a particular code is pasted inside the machine on one of the enclosure panels.

LINCOLN® ELECTRIC

● Keep your head out of fumes. ● Use ventilation or exhaust to remove fumes from breathing zone.	● Turn power off before servicing.	● Do not operate with panel open or guards off.	**WARNING**
● Los humos fuera de la zona de respiración. ● Mantenga la cabeza fuera de los humos. Utilice ventilación o aspiración para gases.	● Desconectar el cable de alimentación de poder de la máquina antes de iniciar cualquier servicio.	● No operar con panel abierto o guardas quitadas.	Spanish **AVISO DE PRECAUCION**
● Gardez la tête à l'écart des fumées. ● Utilisez un ventilateur ou un aspirateur pour ôter les fumées des zones de travail.	● Débranchez le courant avant l'entretien.	● N'opérez pas avec les panneaux ouverts ou avec les dispositifs de protection enlevés.	French **ATTENTION**
● Vermeiden Sie das Einatmen von Schweibrauch! ● Sorgen Sie für gute Be- und Entlüftung des Arbeitsplatzes!	● Strom vor Wartungsarbeiten abschalten! (Netzstrom völlig öffnen; Maschine anhalten!)	● Anlage nie ohne Schutzgehäuse oder Innenschutzverkleidung in Betrieb setzen!	German **WARNUNG**
● Mantenha seu rosto da fumaça. ● Use ventilação e exhaustão para remover fumo da zona respiratória.	● Não opere com as tampas removidas. ● Desligue a corrente antes de fazer serviço. ● Não toque as partes elétricas nuas.	● Mantenha-se afastado das partes moventes. ● Não opere com os paineis abertos ou guardas removidas.	Portuguese **ATENÇÃO**
● ヒュームから頭を離すようにして下さい。 ● 換気や排煙に十分留意して下さい。	● メンテナンス・サービスに取りかかる際には、まず電源スイッチを必ず切って下さい。	● パネルやカバーを取り外したままで機械操作をしないで下さい。	Japanese **注意事項**
● 頭部遠離煙霧。 ● 在呼吸區使用通風或排風器除煙。	● 維修前切斷電源。	● 儀表板打開或沒有安全罩時不準作業。	Chinese **警 告**
● 얼굴로부터 용접가스를 멀리하십시요. ● 호흡지역으로부터 용접가스를 제거하기 위해 가스제거기나 통풍기를 사용하십시요.	● 보수전에 전원을 차단하십시요.	● 판넬이 열린 상태로 작동치 마십시요.	Korean **위 험**
● ابعد رأسك بعيداً عن الدخان. ● استعمل التهوية أو جهاز ضغط الدخان للخارج لكي تبعد الدخان عن المنطقة التي تتنفس فيها.	● اقطع التيار الكهربائي قبل القيام بأية صيانة.	● لا تشغل هذا الجهاز اذا كانت الاغطية الحديدية الواقية ليست عليه.	Arabic **تحذير**

LEIA E COMPREENDA AS INSTRUÇÕES DO FABRICANTE PARA ESTE EQUIPAMENTO E AS PARTES DE USO, E SIGA AS PRÁTICAS DE SEGURANÇA DO EMPREGADOR.

使う機械や溶材のメーカーの指示書をよく読み、まず理解して下さい。そして貴社の安全規定に従って下さい。

請詳細閱讀並理解製造廠提供的説明以及應該使用的銀捍材料，並請遵守貴方的有関勞動保護規定。

이 제폼에 동봉된 작업지침서를 숙지하시고 귀사의 작업자 안전수칙을 준수하시기 바랍니다.

اقرأ بتمعن وافهم تعليمات المصنع المنتج لهذه المعدات والمواد قبل استعمالها واتبع تعليمات الوقاية لصاحب العمل.

WARNING	● Do not touch electrically live parts or electrode with skin or wet clothing. ● Insulate yourself from work and ground.	● Keep flammable materials away.	● Wear eye, ear and body protection.
Spanish **AVISO DE PRECAUCION**	● No toque las partes o los electrodos bajo carga con la piel o ropa mojada. ● Aislese del trabajo y de la tierra.	● Mantenga el material combustible fuera del área de trabajo.	● Protéjase los ojos, los oídos y el cuerpo.
French **ATTENTION**	● Ne laissez ni la peau ni des vêtements mouillés entrer en contact avec des pièces sous tension. ● Isolez-vous du travail et de la terre.	● Gardez à l'écart de tout matériel inflammable.	● Protégez vos yeux, vos oreilles et votre corps.
German **WARNUNG**	● Berühren Sie keine stromführenden Teile oder Elektroden mit Ihrem Körper oder feuchter Kleidung! ● Isolieren Sie sich von den Elektroden und dem Erdboden!	● Entfernen Sie brennbarres Material!	● Tragen Sie Augen-, Ohren- und Körperschutz!
Portuguese **ATENÇÃO**	● Não toque partes elétricas e electrodos com a pele ou roupa molhada. ● Isole-se da peça e terra.	● Mantenha inflamáveis bem guardados.	● Use proteção para a vista, ouvido e corpo.
Japanese **注意事項**	● 通電中の電気部品、又は溶材にヒフやぬれた布で触れないこと。 ● 施工物やアースから身体が絶縁されている様にして下さい。	● 燃えやすいものの側での溶接作業は絶対にしてはなりません。	● 目、耳及び身体に保護具をして下さい。
Chinese **警 告**	● 皮肤或濕衣物切勿接觸帶電部件及銲條。 ● 使你自己與地面和工件絶緣。	● 把一切易燃物品移離工作場所。	● 佩戴眼、耳及身體勞動保護用具。
Korean **위 험**	● 전도체나 용접봉을 젖은 헝겁 또는 피부로 절대 접촉치 마십시요. ● 모재와 접지를 접촉치 마십시요.	● 인화성 물질을 접근 시키지 마시요.	● 눈, 귀와 몸에 보호장구를 착용하십시요.
Arabic **تحذير**	● لا تلمس الاجزاء التي يسري فيها التيار الكهربائي أو الالكترود بجلد الجسم أو بالملابس المبللة بالماء. ● ضع عازلا على جسمك خلال العمل.	● ضع المواد القابلة للاشتعال في مكان بعيد.	● ضع أدوات وملابس واقية على عينيك وأذنيك وجسمك.

READ AND UNDERSTAND THE MANUFACTURER'S INSTRUCTION FOR THIS EQUIPMENT AND THE CONSUMABLES TO BE USED AND FOLLOW YOUR EMPLOYER'S SAFETY PRACTICES.

SE RECOMIENDA LEER Y ENTENDER LAS INSTRUCCIONES DEL FABRICANTE PARA EL USO DE ESTE EQUIPO Y LOS CONSUMIBLES QUE VA A UTILIZAR, SIGA LAS MEDIDAS DE SEGURIDAD DE SU SUPERVISOR.

LISEZ ET COMPRENEZ LES INSTRUCTIONS DU FABRICANT EN CE QUI REGARDE CET EQUIPMENT ET LES PRODUITS A ETRE EMPLOYES ET SUIVEZ LES PROCEDURES DE SECURITE DE VOTRE EMPLOYEUR.

LESEN SIE UND BEFOLGEN SIE DIE BETRIEBSANLEITUNG DER ANLAGE UND DEN ELEKTRODENEINSATZ DES HERSTELLERS. DIE UNFALLVERHÜTUNGSVORSCHRIFTEN DES ARBEITGEBERS SIND EBENFALLS ZU BEACHTEN.

• World's Leader in Welding and Cutting Products •
• Sales and Service through Subsidiaries and Distributors Worldwide •
Cleveland, Ohio 44117-1199 U.S.A. TEL: 216.481.8100 FAX: 216.486.1751 WEB SITE: www.lincolnelectric.com