OPTIMARC® CV/CC500

FOR CODES: 76209, 76210

SERVICE MANUAL

Safety Depends on You

Lincoln arc welding and cutting equipment is designed and built with safety in mind. However, your overall safety can be increased by proper installation and thoughtful operation on you part.

DO NOT INSTALL, OPERATE OR REPAIR THIS EQUIPMENT WITHOUT READING THIS MENUAL AND THE SAFETY PRECAUTIONS CONTAINED THROUGHOUT. And, most importantly, think before you act and be careful.

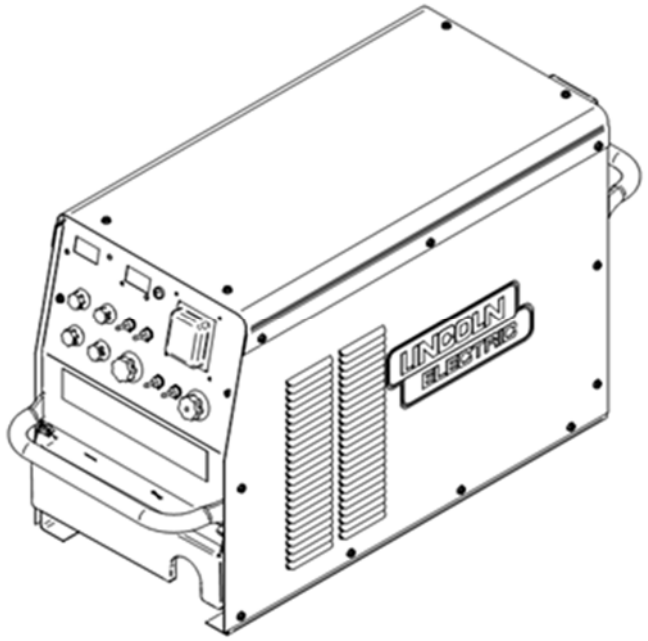

SVM7007 Rev 01

Copyright © **The Shanghai Lincoln Electric Company 2021.10**

THE SHANGHAI LINCOLN ELECTRIC COMPANY
No. 195, Lane 5008, Hu Tai Rd. Baoshan, Shanghai, PRC 201907
www.lincolnelectric.com.cn

SAFETY

⚠WARNING

ARC WELDING CAN BE HAZARDOUS. PROTECT YOURSELF AND OTHERS FROM POSSIBLE SERIOUS INJURY OR DEATH. KEEP CHILDREN AWAY. PACEMAKER WEARERS SHOULD CONSULT WITH THEIR DOCTOR BEFORE OPERATING.

BE SURE THAT ALL INSTALLATION, OPERATION, MAINTENANCE AND REPAIR PROCEDURES ARE PERFORMED ONLY BY QUALIFIED INDIVIDUALS.

ELECTRIC AND MAGNETIC FIELDS may be dangerous.

1.a Electric current flowing through any conductor causes localized Electric and Magnetic Field(EMF). Welding current creates EMF fields around welding cables and welding machines.

1.b EMF fields may interfere with some pacemakers, and welders having a pacemaker should consult their physician before welding.

1.c All welders should use the following procedures in order to minimize exposure to EMF fields from the welding circuit:

1.c.1 Route the electrode and work cables together – Secure them with tape when possible.

1.c.2 Never coil the electrode lead around your body.

1.c.3 Do not place your body between the electrode and work cables. If the electrode cable is on your right side, the work cable should also be on your right side.

1.c.4 Connect the work cable to the work piece as close as possible to the area being welded.

ARC RAYS can burn.

2.a Use a shield with the proper filter and cover plates to protect your eyes from sparks and the rays of the arc. Headshield and filter lens should conform to ANSI Z87. I standards.

2.b Use suitable clothing made from durable flame-resistant material to protect your skin and that of your helpers from the arc rays.

2.c Protect other nearby personnel with suitable, non-flammable screening and/or warn them not to watch the arc nor expose themselves to the arc rays or to hot spatter or metal.

ELECTRIC SHOCK can kill.

3.a The electrode and work (or ground) circuits are electrically “hot” when the welder is on. Do not touch these “hot” parts with your bare skin or wet clothing. Wear dry, hole-free gloves to insulate hand.

3.b Insulate yourself from work and ground using dry insulation. Make certain the insulation is large enough to cover your full area of physical contact with work and ground.

In addition to the normal safety precautions, if welding must be performed under electrically hazardous conditions (in damp locations or while wearing wet clothing; on metal structures such as floors, grating or scaffolds; when in cramped positions such as sitting, kneeling or lying, if there is a high risk of unavoidable or accidental contact with the work piece or ground) use the following equipment:

- Semiautomatic DC Constant Voltage (Wire) Welder.
- DC Manual (MMA) Welder.
- AC Welder with Reduced Voltage Control.

3.c In semiautomatic or automatic wire welding, the electrode, electrode reel, welding head, nozzle or semiautomatic welding gun are also electrically “hot”.

3.d Always be sure the work cable makes a good electrical connection with the metal being welded. The connection should be as close as possible to the area being welded.

3.e Ground the work or metal to be welded to a good electrical (earth) ground.

3.f Maintain the electrode holder, work clamp, welding cable and welding machine in good, safe operating condition. Replace damaged insulation.

3.g Never dip the electrode in water for cooling.

3.h Never simultaneously touch electrically “hot” parts of electrode holder to two welders because voltage between the two can be total of the open circuit voltage of both welders.

FUMES AND GASES can be dangerous.

4.a Welding may produce fumes and gases hazardous to health. Avoid breathing these fumes and gases. When welding, keep your head out of fume. Use enough ventilation and/or exhaust at the arc to keep fumes and gases away from the breathing zone. When welding with electrodes which require special ventilation such as stainless or hard facing (see instructions on container or MSDS) or on lead or cadmium plated steel and other metals or coatings which produce highly toxic fumes, keep exposure as low as possible and below Threshold Limit Values (TLV) using local exhaust or mechanical ventilation. In confined spaces or in some circumstances, outdoors, a respirator may be required. Additional precautions are also required when welding on galvanized steel.

4.b Do not weld in locations near chlorinated hydrocarbon vapors coming from degreasing, cleaning or spraying operations. The heat and rays or the arc can react with solvent vapors to form phosgene, a highly toxic gas, and other irritating products.

4.c Shielding gases used for arc welding can displace air and cause injury or death. Always use enough ventilation, especially in confined areas, to insure breathing air is safe.

4.d Read and understand the manufacturer's instructions for this equipment and the consumables to be used, including the material safety data sheet (MSDS) and follow your employer's safety practices. MSDS forms are available from your welding distributor or from the manufacturer.

FOR ELECTRICALLY powered equipment.

5.a Turn off input power using the disconnect switch at the fuse box before working on the equipment.

5.b Install equipment in accordance with the national standard, all local standards and the manufacturer's recommendations.

5.c Ground the equipment in accordance with the national standards and the manufacturer's recommendations.

WELDING SPARKS can cause fire or explosion.

6.a Remove fire hazards from the welding area. If this is not possible, cover them to prevent the welding sparks from starting a fire. Remember that welding sparks and hot materials from welding can easily go through small cracks and openings to adjacent areas. Avoid welding near hydraulic lines. Have a fire extinguisher readily available.

6.b When not welding, make certain no part of the electrode circuit is touching the work or ground. Accidental contact can cause overheating and create a fire hazard.

6.c Do not heat, cut or weld tanks, drums or containers until the proper steps have been taken to insure that such procedures will not cause flammable or toxic vapors from substances inside. They can cause an explosion even though they have been "cleaned".

6.d Sparks and spatter are thrown from the welding arc. Wear oil free protective garments such as leather gloves, heavy shirt, cuffless trousers, high shoes and a cap over your hair.

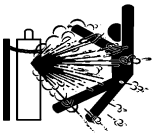

CYLINDER may explode if damaged.

7.a Use only compressed gas cylinders containing the correct shielding gas for the process used and properly operating regulators designed for the gas and pressure used. All hoses, fittings, etc. should be suitable for the application and maintained in good condition.

7.b Always keep cylinders in an upright position securely chained to an undercarriage or fixed support.

7.c Cylinder should be located:
Away from areas where they may be struck or subjected to physical damage.
A safe distance from arc welding or cutting operations and any other source of heat, sparks, or flame.

7.d Never allow the electrode, electrode holder or any other electrically "hot" parts to touch a cylinder.

7.e Keep your head and face away from the cylinder valve outlet when opening the cylinder valve.

7.f Valve protection caps should always be in place and hand tight except when the cylinder is in use or connected for use.

INSTALLATION ..... Section A

OPERATION ..... Section B

MAINTENANCE ..... Section C

THEORY OF OPERATION ..... Section D

TROUBLESHOOTING AND REPAIR ..... Section E

WIRING DIAGRAMS ..... Section F

Technical Specifications A-2

Safety Precautions A-3

Input and Grounding Connections A-3

Output Connection A-3

TECHNICAL SPECIFICATIONS – OPTIMARC® CV/CC500

INPUT – THREE PHASE ONLY			
Standard Voltage/Phase/Frequency		380V ~ 415V (±10%) / 3 / 50 Hz	
RAETED OUTPUT – DC AND AC			
Input Power at Rated Output (MMA)		23kVA (60% DUTY CYCLE)	
MODE	DUTY CYCLE	CURRENT	RATED OUTPUT VOLTAGE
GMAW	60% 100%	500A 390A	39V 33.5V
SMAW (STICK)	60% 100%	500A 390A	40V 35.6V
GTAW (TIG)	60% 100%	500A 390A	30V 25.6V
OUTPUT RANGE			
MODE	OUTPUT CURRENT RANGE	OCV	OUTPUT VOLTAGE RANGE
GMAW	50A ~ 500A	60V	16 V ~ 39V
SMAW (STICK)	15A ~ 500A	60V	20.6 V ~ 40V
GTAW (TIG)	5A ~ 500A	60V	10.2 V ~ 30V

RECOMMENDED INPUT WIRE AND FUSE SIZES					
Input Voltage/ Frequency (Hz)	Maximum Input Ampere	Maximum Effective Supply Current	60°C Copper Wire in Conduct Sizes	Fuse or Breaker Size (Super Lag)	Grounding Conductor Size
342V~456.5V/ 50/60Hz	51A	40A	12mm^2	60A	10mm^2

PHYSICAL DIMENSIONS			
Height	Width	Depth	Weight
500mm	350mm	850mm	45Kg

For any maintenance or repair operation it is recommended to contact the nearest technical service center or directly consult the machine division of the Shanghai Lincoln Electric. Maintenance or repairs performed by unauthorized service center or personnel will void the manufacturer's warranty.

SAFETY PRECAUTIONS

Read the entire installation section before starting installation.

⚠ WARNING

ELECTRIC SHOCK can kill.

- **Only qualified personnel should perform this installation.**
- **Turn the input power OFF at the main switch or fuse box before working on this equipment. Turn off the input power to any other equipment connected to the welding system at the main switch or fuse box before working on the equipment.**
- **Do not touch electrically "Hot" parts.**
- **Always connect the OPTIMARC® grounding lug (located at the rear of the case) to a proper safety (Earth) ground.** OPTIMARC® is for use on a 4 wire system with earthed neutral.

SELECT SUITABLE LOCATION

This power source should not be subjected to falling water, nor should any parts of it be submerged in water. Doing so may cause improper operation as well as pose a safety hazard. The best practice is to keep the machine in a dry, sheltered area.

⚠ CAUTION

The bottom of machine must always be placed on a firm, secure, level surface. There is a danger of the machine toppling over if this precaution is not taken.

Place the welder where clean cooling air can freely circulate in through the back louvers and out through the case or front sides. Water, dirt dust or any foreign material that can be drawn into the welder should be kept to a minimum. Failure to observe these precautions can result in excessive operating temperatures and nuisance shutdowns.

Locate the machine away from radio-controlled machinery. Normal operation of the welder may adversely affect the operation of RF controlled equipment, which may result in bodily injury or damage to the equipment.

STACKING

The machine cannot be stacked. Be sure to locate the machines on a firm level surface.

LIFTING

The machine can be moved using the handles.

INPUT AND GROUNDING CONNECTIONS

⚠ WARNING

Only a qualified electrician should connect the input leads to the OPTIMARC®. Connections should be made in accordance with the connection diagram. Failure to do so may result in bodily injury or death.

Open the input box on the rear of the case. Use a three-phase supply line, the three live wires should go through the three holes of the input wire holder and be securely clamped and fixed. Connect L1, L2, L3 and ground according to the Input Supply Connection Diagram decal, refer to Figure A.1.

FIGURE A.1

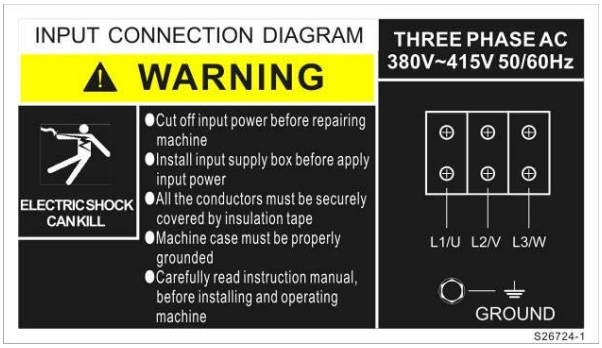

Make sure the amount of power available from the input connection is adequate for normal operation of the machine. Refer to the Technical Specifications at the beginning of this Installation section for recommended
fuse and wire sizes. Fuse the input circuit with the recommended super lug fuse or delay type breakers. Using fuses or circuit breakers smaller than recommended may result in "nuisance" shut-offs from welder inrush currents, even if the machine is not being used at high currents.

OUTPUT CONNECTION

Connect electrode and work leads with sufficient size between the proper output studs on the power source and the electrode or the work. Be sure the connection to the work makes tight metal to metal electrical contact. Poor work lead connections can result in poor welding performance.

To avoid interference problems with other equipment and to achieve the best possible operation, route all cables directly to the electrode and the work. Avoid excessive lengths and do not coil excess cable.

Minimum work and electrode cable sizes are as follows:

TABLE A.1

Current (60% Duty Cycle)	Minimum Copper Work Cable Size
	Up To 30m Length
200A	30 mm^2
300A	50 mm^2
400A	70 mm^2
500A	95 mm^2

Note: The recommended cable size may need to change depending on its quality. When the rated current flow goes through, the total voltage drop on the ground cable and electrode cable must not exceed 4 volts.

CONNECTION DIAGRAMS

GMAW PROCESS (CV MODE) CONNECTION (FIGURE A.2)

- Set the rotary switch to **FCAW-GS** or **GMAW** mode
- Set the control switch to **Feeder**

FIGURE A.2

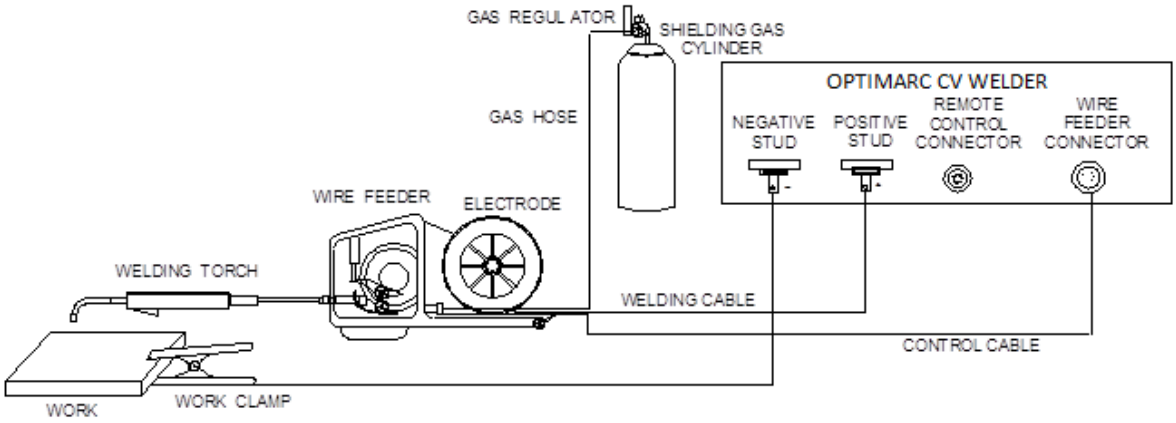

GTAW PROCESS (CC MODE) CONNECTION (FIGURE A.3)

- Set the rotary switch to **GTAW** mode
- Set the control switch to **REMOTE**, the actual output current would be set by the remote device up to the maximum current set by local output pot. Recommended to use Foot Amptrol K870.
- Set the control switch to **LOCAL**, machine output the current set by local output pot.

When the machine set to 4 step, turning the crater current and voltage, the crater value will be shown on the display, then change back to the weld preset value.

FIGURE A.3

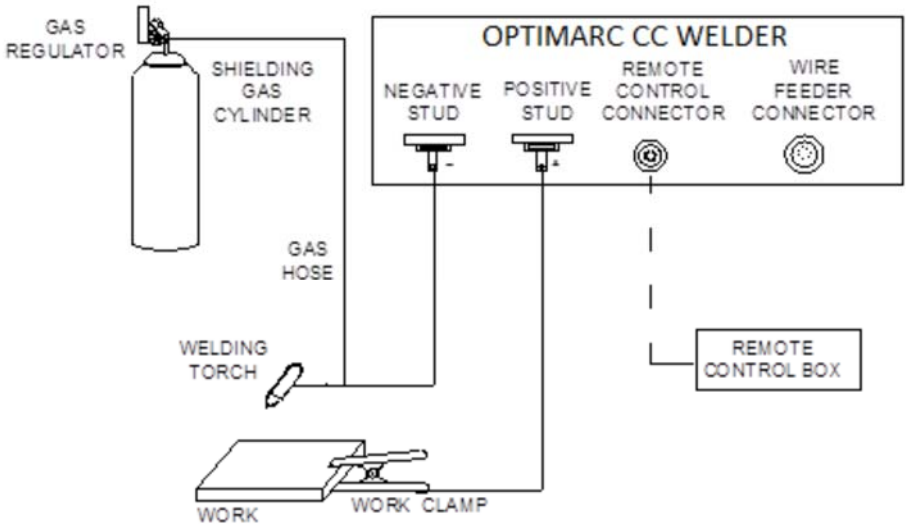

SMAW PROCESS (CC MODE) CONNECTION (FIGURE A.4)

- Set the rotary switch to **SMAW** mode
- Set the control switch to **REMOTE**, the actual output current would be set by the remote device up to the maximum current set by local output pot.
- Set the control switch to **LOCAL**, machine output the current set by local output pot.

FIGURE A.4

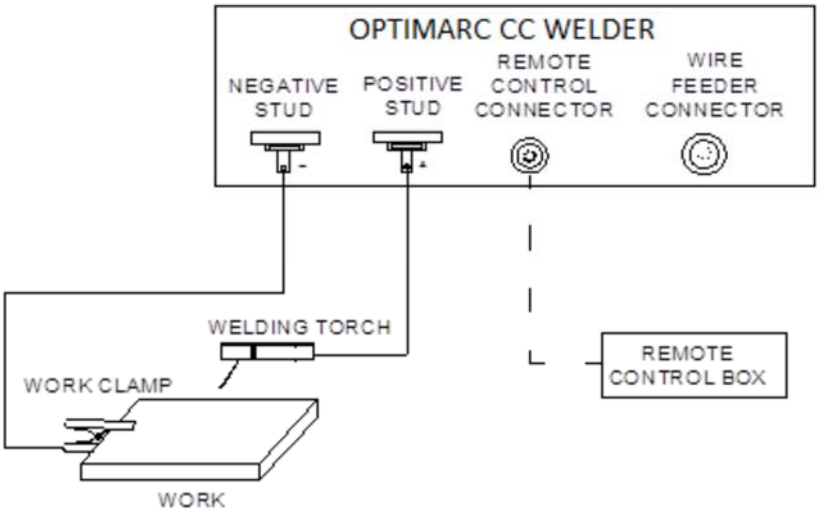

6-PIN WIRE FEEDER CONNECTOR INSTRUCTION
Please see Figure A.5 and Table A.2 for more details.

6-PIN REMOTE CONNECTOR INSTRUCTION
Please see Figure A.6 and Table A.3 for more details.

FIGURE A.5 WIRE FEEDER CONNECTOR

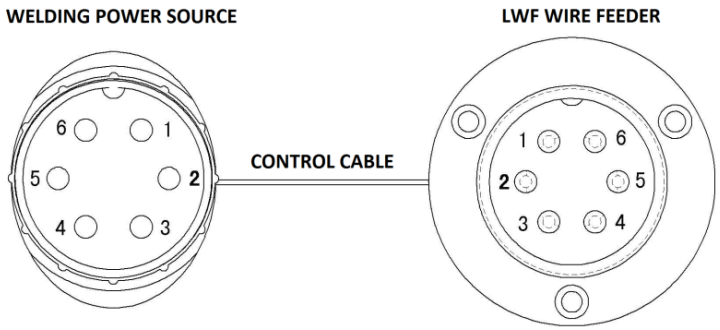

FIGURE A.6

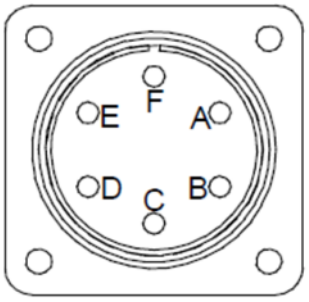

TABLE A.2

Power Source			Wire Feeder		
Pin	**Function**	**Lead #**	**Pin**	**Function**	**Lead #**
1	" + " pulse signal for motor control	91	1	Positive terminal of motor	91
2	" + " pulse signal for gas solenoid	92	2	One lead of gas solenoid	92
3	" + " control signal for gas purge, cold inch and trigger	93	3	Control signals output (gas purge, cold inch and trigger)	93
4	+/- 10V control signal for arc current and arc voltage	94	4	Control signals output (arc current and arc voltage)	94
5	GND for arc current, arc voltage, gas purge, cold inch and trigger control	95	5	Common GND	95
6	GND for gas solenoid & motor control	96	6	Negative terminal of motor and another lead of gas solenoid	96

TABLE A.3

Power Source			Remote Controller		
Pin	**Function**	**Lead #**	**Pin**	**Function**	**Lead #**
A	Output control power +	77	A	Pot foot 1	77
B	Output control signal	76	B	Pot foot 2	76
C	Output control power -	75	C	Pot foot 3	75
D	Output control switch +	2	D	Switch foot 1	2
E	Output control switch -	4	E	Switch foot 2	4
F	Ground lead (case)	G2	F	Case	G2

Safety Precautions B-2

Duty Cycle & Thermal Protection B-2

Front Panel Function B-3

Rear Panel Function B-4

DIP Switch Descriptions B-6

SAFETY PRECAUTIONS

⚠ WARNING

ELECTRIC SHOCK can kill.

- **Do not touch electrically live parts or electrode with skin or wet clothing.**
- **Insulate yourself from work and ground.**
- **Always wear dry insulating gloves.**

FUMES AND GASES can be dangerous.

- **Keep your head out of fumes.**
- **Use ventilation or exhaust to remove fumes from breathing zone.**

WELDING SPARKS can cause fire or explosion.

- **Keep flammable material away.**
- **Do not weld on closed containers.**

ARC RAYS can burn eyes and skin.

- **Wear eye, ear and body protection.**

PLEASE SEE ADDITIONAL WARNING INFORMATION AT THE FRONT OF THIS OPERATOR'S MENUAL.

DUTY CYCLE

The duty cycle of a welding machine is the percentage of time in a 10 minute cycle at which the welder can operate the machine at rated welding current.

60% duty cycle:

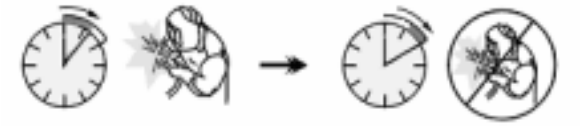

Weld for 6 minutes Break for 4 minutes

Excessive extension of the duty cycle may cause the thermal protection circuit to activate.

THERMAL PROTECTION

The OPTIMARC® machine is equipped with thermal protection devices. When the machine has gone into thermal overload, the output will be shut off and the thermal protection symbol will be displayed on the screen. When the machine has been cooled to a safe temperature, the thermal protection symbol will disappear and the machine may resume normal operation.

Note:
For safety reasons the machine's welding output will not come on after a thermal shutdown until the output is disabled and re-enabled.

OPERATIONAL FEATURES AND CONTROLS

FRONT PANEL (SEE FIGURE B.1)

1. GAS SELECTION

OPTIMARC® CV/CC500 is designed for CO2 and Ar/CO2.

2. WELDING MODE SELECTION

- **FCAW**
  It is for self-shielded flux cored wire arc welding.
- **FCAW-GS**
  It is for gas shielded flux cored wire arc welding. Setting up the machine, please see the Figure A.3
- **GMAW**
  It is for gas shielded solid wire arc welding.
- **GTAW**
  It is for TIG mode. OPTIMARC® CV/CC500 must apply "touch start" for arc start.
- **SMAW**
  It is for stick mode.

3. WIRE DIAMETER SELECTION

OPTIMARC® CV/CC500 is designed for ≤Φ1.0, Φ1.2-1.4 and ≥Φ1.6 wires.

4. ON/OFF POWER SWITCH

Switch up to power on; Switch down to power off.

5. CONTROL SWITCH

- **LOCAL**
  When switch to local, the output current or output voltage can be set by output control knob (See item 15).
- **FEEDER**
  When switch to feeder, the welding current and voltage can be set by the feeder knob in GMAW mode (See item 19).
- **REMOTE**
  When switch to remote， the welding current or voltage can be set by a remote control box, choose the right connector according to the weld mode (See item 18).

6. THERMAL INDICATOR

This status light illuminates when an over temperature situation occurs. The indicator light also momentary turns on during start up.

7. 2-STEP AND 4-STEP SELECTION

This toggle switch enables the selection of 2-STEP (no crater) or 4-STEP (with crater) operation mode.
2-STEP mode - no crater output after user release the trigger.
4-STEP mode – crater function initiates when user "Clicks" trigger again after releasing it.

FIGURE B.1 FRONT PANEL

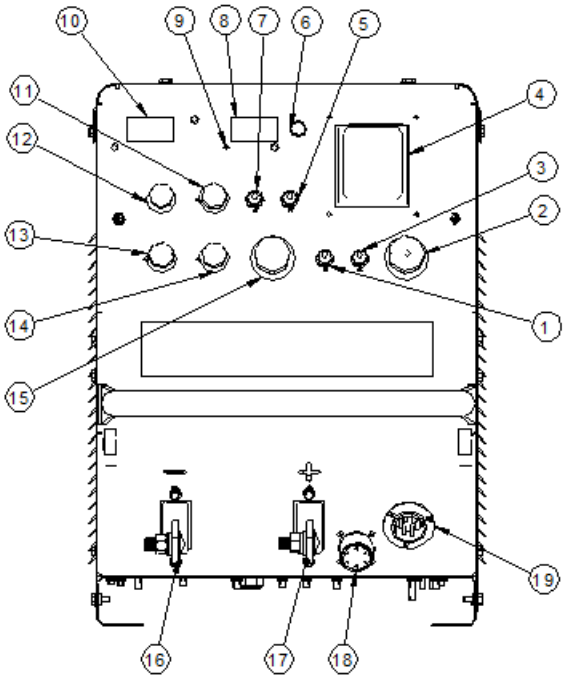

Please see **FIGURE B.3 and B.4** for more details of weld sequence.

8. DIGITAL VOLTAGE METER

This meter displays the preset voltage before a weld and the actual voltage during weld. The actual voltage will displays and flashes for 5 seconds after a weld ends.

9. SYNERGIC

This status light illuminates when the power source is set for synergic operation. Synergic operation is controlled by DIP switch 5 on the control board. See the DIP switch section for additional information.

10. DIGITAL CURRENT METER

This meter displays the preset current before a weld and the actual welding current during weld. The actual current will displays and flashes for 5 seconds after a weld ends.

11. CRATER VOLTAGE

This knob sets the value of output voltage during the crater time.

12. CRATER CURRENT

This knob sets the value of output current (wire feeding speed) during the crater time.

13. HOT START

This knob can be used for setting the additional output value at the start of weld in all of modes.

14. ARC CONTROL

This knob controls the arc output characteristic. When it is turned clockwise, the arc is crisper. When it turned counter-clockwise, the arc is softer.

15. LOCAL OUTPUT CONTROL

When the **CONTROL SWITCH** is set to "LOCAL", The output voltage (CV mode) or output current (CC mode) will be controlled by this knob.
In TIG mode, it will control the maximum output current.
In stick mode, it will control the output current range.

16. NEGATIVE OUTPUT STUD

17. POSITIVE OUTPUT STUD

18. 6-PIN AMPHENOL CONNECTOR

Please see the **FIGURE A.7** for the details of the connection. Recommend remote controller for GTAW mode is K870 (Foot amptrol), and recommend remote controller for SMAW is K857 (Pot control).

19. 6-PIN WIRE FEEDER CONNECTOR

Please see the **FIGURE A.6** for the details of the connection.

20. STATUS INDICATOR

The status light will be green for normal operation. The status light will flash in red with a serial of error digital codes as power source gets in some trouble. The status light will always have synchronization with the LED3 on switchboard inside machine.

REAR PANEL (PLEASE SEE FIGURE B.2)

21. INPUT CABLE HOLDING BRACKET

This bracket securely holds the three phase power cables in place.

22. INPUT BOX

This insulation box is used to cover the input connections.

⚠ WARNING

This insulation box must be secure before turning on the main power supply.

23. GROUND LEAD CONNECTION

Connect the ground lead to the paint-free location on the case back by securing its lug-end with the screw into the case.

24. AUX. POWER RECEPTACLE

Export type machine: This is a 220V/200W auxiliary power output socket, for gas heater.

⚠ CAUTION

Only plug the correct gas heater into this receptacle. DO NOT plug other electric devices into the receptacle, otherwise, damage may occur to the machine.

25. FUSE AND FUSE HOLDER

Export type machine: 250V/2A fuse is used to protect the auxiliary 220V power outlet.

26. FUSE AND FUSE HOLDER

250V/8A fuse is used to protect the auxiliary power for the wire feeder.

FIGURE B.2 – REAR PANEL

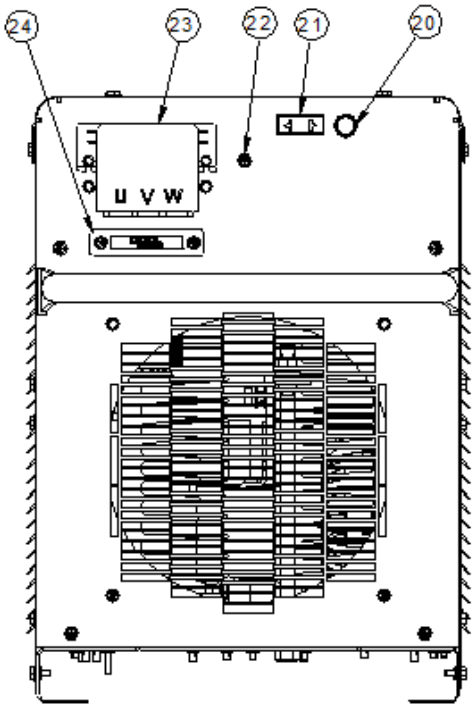

FIGURE B.3 - 2-STEP

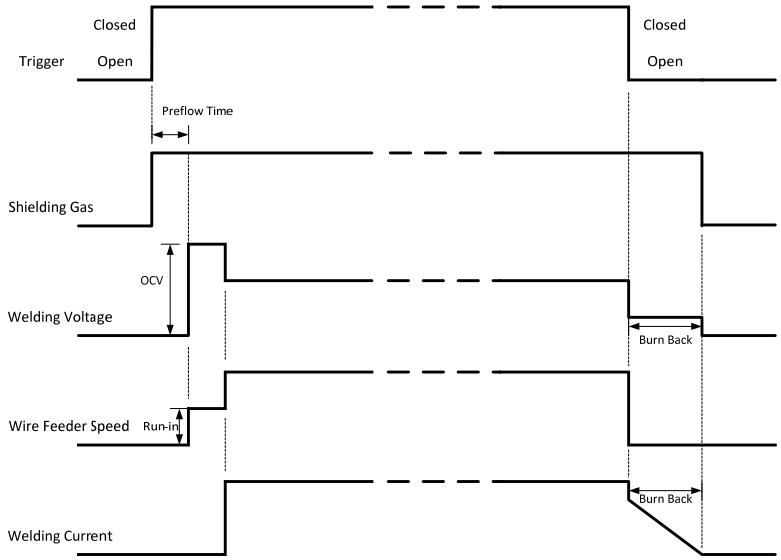

FIGURE B.4 - 4 STEP (CRATER REPEAT MODE OFF)

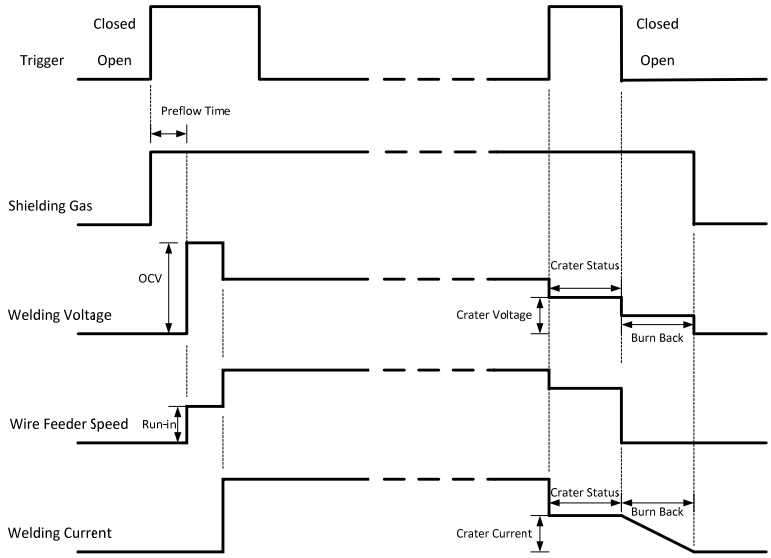

FIGURE B.5 - 4 STEP (CRATER REPEAT MODE ON)

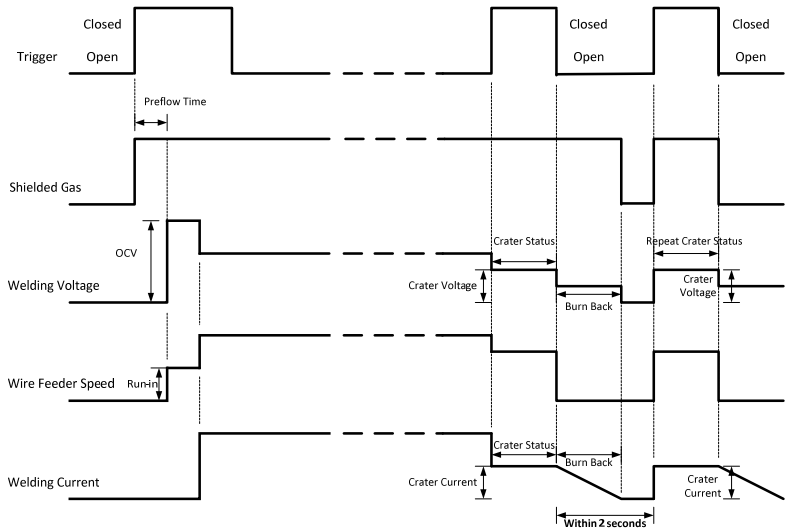

DIP SWITCH DESCRIPTIONS

OPTIMARC® CV/CC machine offers a DIP switch on the control board, which allows user to have additional features. After disconnecting the machine from input power remove the roof To set the DIP switch.See **FIGURE B.7** for the right position.
There are 8 individual switches integrated into this DIP switch .All the initial factory settings in the OFF position. Please see **FIGURE B.6.**

⚠ WARNING

Disconnecting the power supply before the roof removed.

1. PREFLOW ON/OFF SWITCH
This switch enables preflow before turning on output voltage. Please see **FIGURE B.3** for detail.

2. LONG CABLE WELD MODE SWITCH
OFF = welding with a cable length less than 20M.
ON = welding with a cable length more than 20M (including 20M).

3. CRATER REPEAT MODE SWITCH
After releasing the trigger, if the operator find a visible crater appearing, and activating the trigger again within 2 seconds, the power source will continue output at crater voltage and current to fill this crater. For more details, please see **FIGURE B.5**.

4. SPECIAL FUNCTION TEST
It enables a test procedure to test the control knobs and the toggle switches when this DIP switch is **ON** and the other DIP switches are **OFF**. This DIP switch should be **OFF** when user prepares to weld.

5. SYNERGIC
OFF = Amps and volts knobs on feeder are independent.
ON = Preset of volts knob is tied to the preset of the amps knob.
Set the current first, then set the voltage to match the current, such as 200A/25V, then the voltage will follow the current as machine programmed when the current adjusted.
See operation feature item 8.

6. FAST RUN-IN
OFF = run-in speed is 35% of weld set wire feed speed (limited by the absolute wire feed speed minimum set in the parameter file)
ON = run-in speed is 75% of weld set wire feed speed (limited by the absolute wire feed speed minimum set in the parameter file)

7. FEEDER APPLICATION
OFF = 18.3V wire feeder application.
ON = 24V wire feeder application.

8. WIRE FEEDER SPEED CALIBRATION

FIGURE B.6 – DIP SWITCH LOCATION

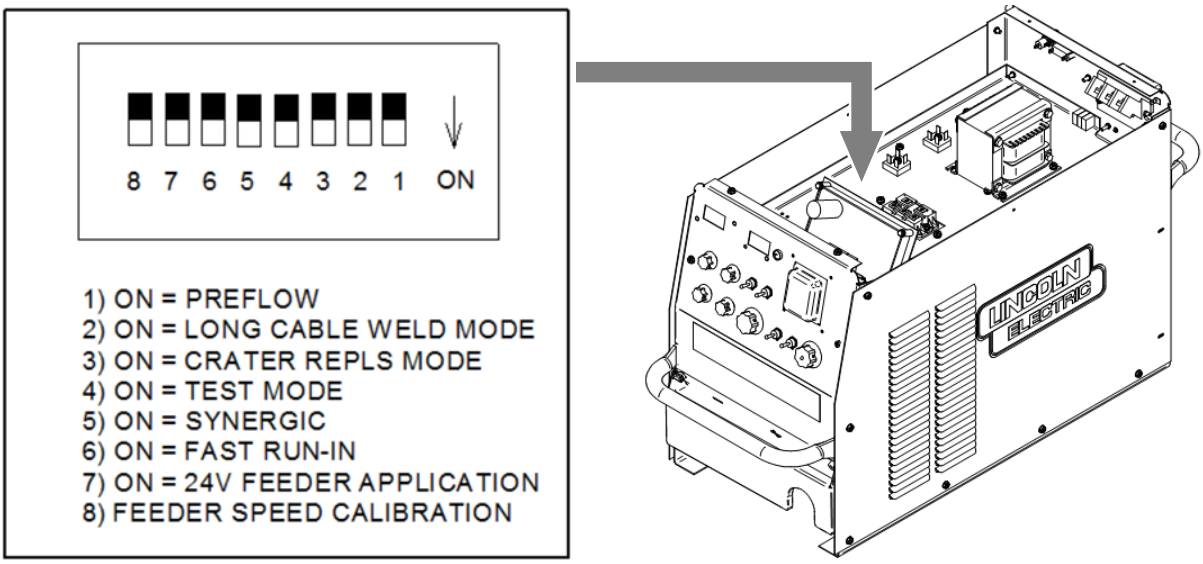

Safety Precautions C-2

Periodic Maintenance C-2

Thermal Protection C-2

Layout of Main Components C-3

SAFETY PRECAUTIONS

Read this entire section of the operating instructions before operating the machine.

⚠ WARNING

ELECTRIC SHOCK can kill

- **Only qualified personnel should perform this installation.**
- **Turn the input power OFF at the main switch or fuse box before working on this equipment. Turn off the input power to any other equipment connected to the welding system at the main switch or fuse box before working on the equipment.**
- **Do not touch electrically "Hot" parts.**
- **Always connect the OPTIMARC® grounding lug (located at the rear of the case) to a proper safety (Earth) ground.** OPTIMARC® is for use on a 4 wire system with earthed neutral.

⚠ WARNING

For any maintenance or repair operation, it is recommended to contact the nearest technical service centre or directly consult the machine division of the Shanghai Lincoln Electric.

Maintenance or repairs performed by unauthorized service centre or personnel will void the manufacturer's warranty.

PERIODIC MAINTENANCE

The daily maintenance frequency of the equipment should be determined according to the actual working environment. Any noticeable safety hazard should be reported immediately.

- Check to make sure the cable and related connectors work well, otherwise replace them.
- Clean interior of machine with a low pressure air stream regularly.
- Always keep the machine clean. Use a soft dry cloth to wipe the machine's case, especially the louver part of air in and out.

⚠ WARNING

Do not open or connect any other substance into the device. All maintenance work must be carried out when the power supply of the equipment is cut off. Please wear gloves according to safety rules. The operation safety must be confirmed before each repair and welding test.

THERMAL PROTECTION

Thermostats protect the machine from excessive operating temperatures. Excessive temperatures may be caused by a lack of cooling air or operating the machine beyond the duty cycle and output rating. If excessive operating temperature should occur, the thermostat will prevent output voltage or current. The meter will remain energized during this time. Thermostats are self-resetting once the machine cools sufficiently. If the thermostat shutdown was caused by excessive output or duty cycle and the fan is operating normally, the Power Switch may be left on.

For the sake of safety, when the torch trigger is not released, the machine will not output again even after the thermostats are self-reset.

LAYOUT OF MAIN COMPONENTS

FIGURE C.1

Ⅰ Case Front Assembly

Ⅱ Divider Panel Assembly

Ⅲ Base & Centre Assembly

Ⅳ Case Back Assembly

Ⅴ Wraparound Assembly

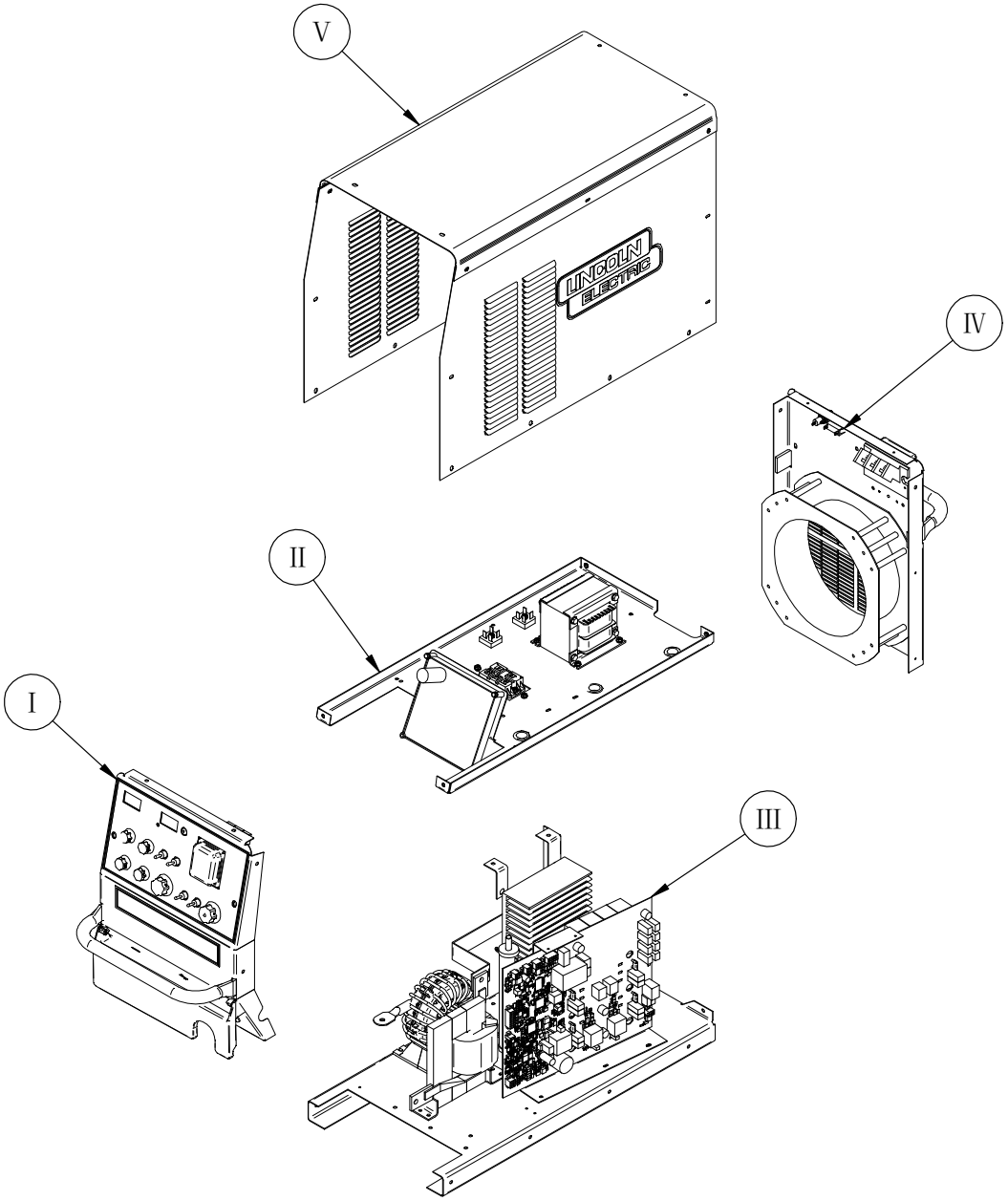

Input Power, Input Rectifier, Aux Transformer & Fan…… D-2

Thermostat, Switchboard, Main Transformer, Output Rectifier & Output Choke…… D-3

Single-phase Rectifier, Control Board, Setting Circuit & Display Board …… D-4

Operating Principle of Inverter …… D-5

INPUT POWER, INPUT RECTIFIER, AUX TRANSFORMER & FAN

When the input line switch on, three-phase 342V~418V & 50/60Hz input voltage is applied to the Input Rectifier, Aux Transformer and the Fan.

Two phases of the three-phase input power are applied to the Aux Transformer by leads 20A & 21A, also applied to the Fan by leads 20B & 21B.

Three 36VAC (for the export version machine, one out of the three is 220VAC) that developed by the Aux Transformer are applied to the Control Board (4 & 5), the Switchboard (8 & 9) and the Heater Receptacle (6 & 7).

The initial input power is applied to the Input Rectifier through a line switch. The Input Rectifier developed a pulsed 480V～590VDC voltage to the Switchboard.

FIGURE D.1

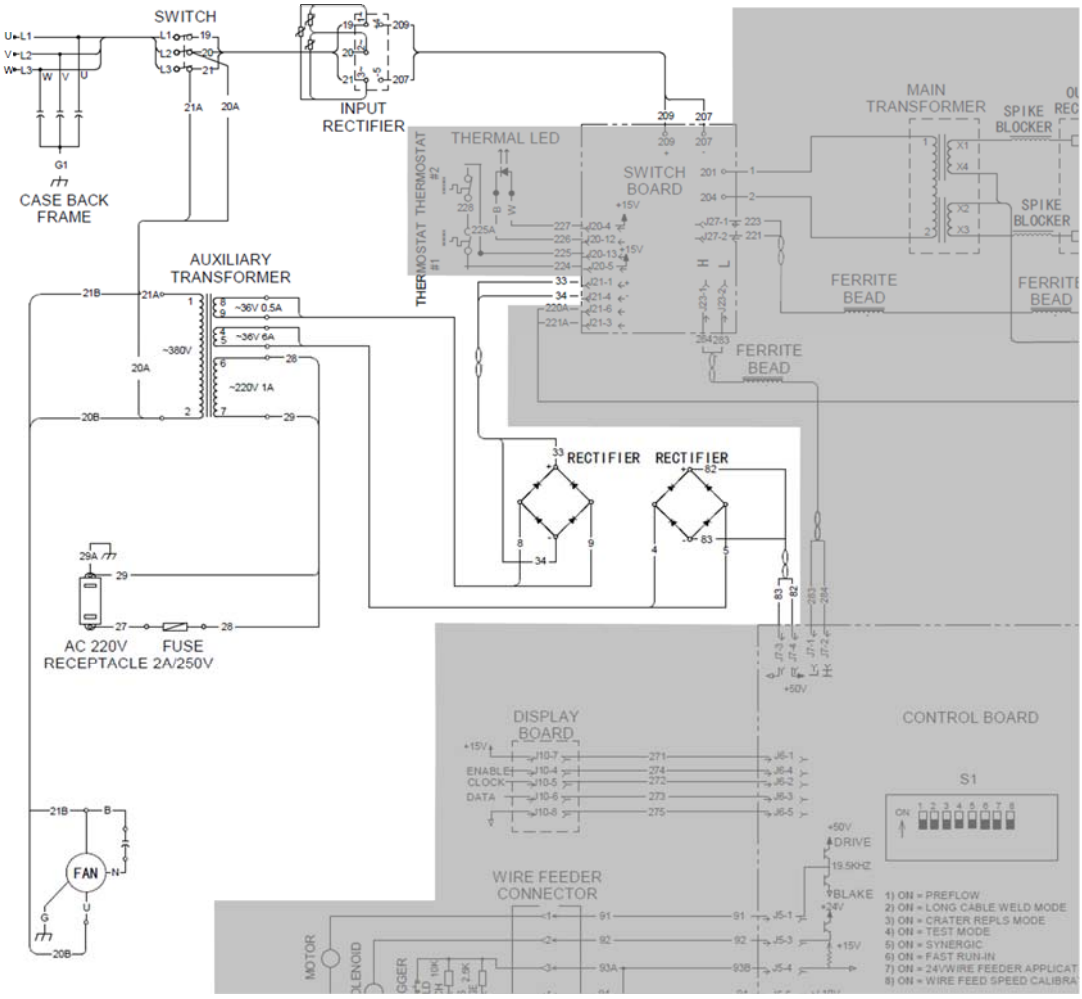

THERMOSTAT

Two normally closed (NC) thermostats protect the machine from excessive operating temperatures. These thermostats are wired in series and are connected to the Switchboard. One of the thermostats is located on the IGBT module heatsink and the other is located on the Diode Assembly heatsink.

SWITCHBOARD, MAIN TRANSFORMER, OUTPUT RECTIFIER & OUTPUT CHOKE

When the input voltage is applied to the machine, the Aux Transformer generates power supply to the Control Board and the Switchboard, and starting system self-test and initialization.

The main function of the Switchboard is to receive the pulsed DC voltage from the Input Rectifier (207/209), then filter and invert to 30 KHz AC voltage (201/204), output to the primary windings of the Main Transformer.

The hi-frequency low-voltage AC power from the secondary windings of the Main Transformer will be rectified by the Output Rectifier, and filtered by the Output Choke, then provide a stable welding output.

In addition the Switchboard monitors the status of the machine by receive current feedback signal from primary winding of the Main Transformer, over-voltage /low-voltage signal from the main circuit, voltage and current feedback from the output terminals.

FIGURE D.2

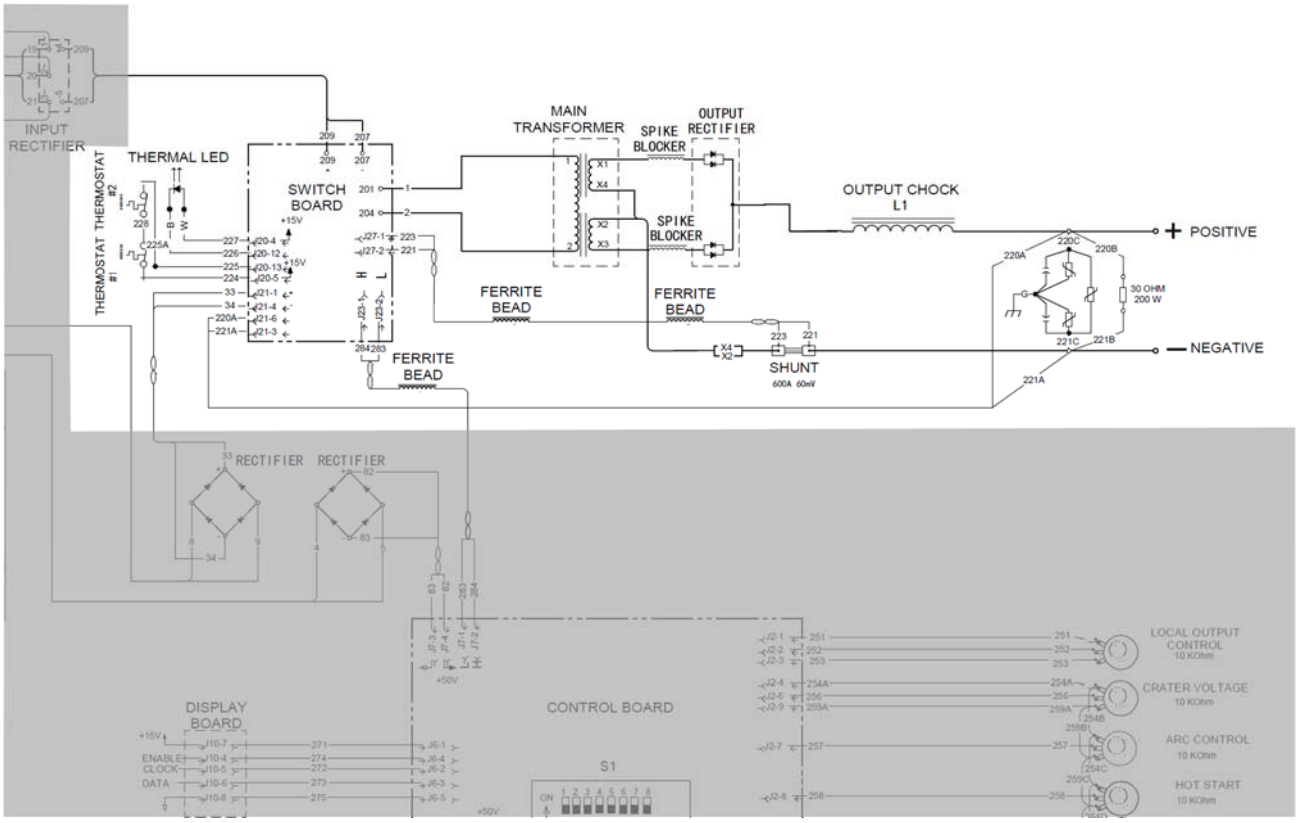

SINGLE-PHASE RECTIFIER

Two single-phase rectifier bridges are respectively connected to two 36VAC voltage output of the Auxiliary Transformer. The single-phase rectifier bridge rectifies the 36VAC voltage into pulsating DC voltage and supplies it to the Control Board (82/83) and the Switchboard (33/34).

CONTROL BOARD

The Control Board receives parameter adjustment and function selection signals from the front panel and wire feeder, and communicates with the Switchboard through CAN bus. These signals are processed and transmitted to the Switchboard to control the welding output. The Control Board also drives the Feeding Motor and the Gas solenoid, and provides signals to the Display Board.

SETTING CIRCUIT

The given circuit provides the given signal for the Control Board according to the parameters set by the operator. It is composed of potentiometers and function selection switches on the panel of the power source and the wire feeder, including: current & voltage potentiometer, gas purge button and wire feed button on wire feeder, crater current & crater voltage potentiometer, arc control potentiometer, gas selection switch, wire selection switch, 2/4 step selection switch & mode selection switch on front panel of power source.

DISPLAY BOARD

Receive the signals come from the Control Board and display preset/output parameters and status of the machine. The Control Board provide DC15V power supply to the Display Board.

FIGURE D.3

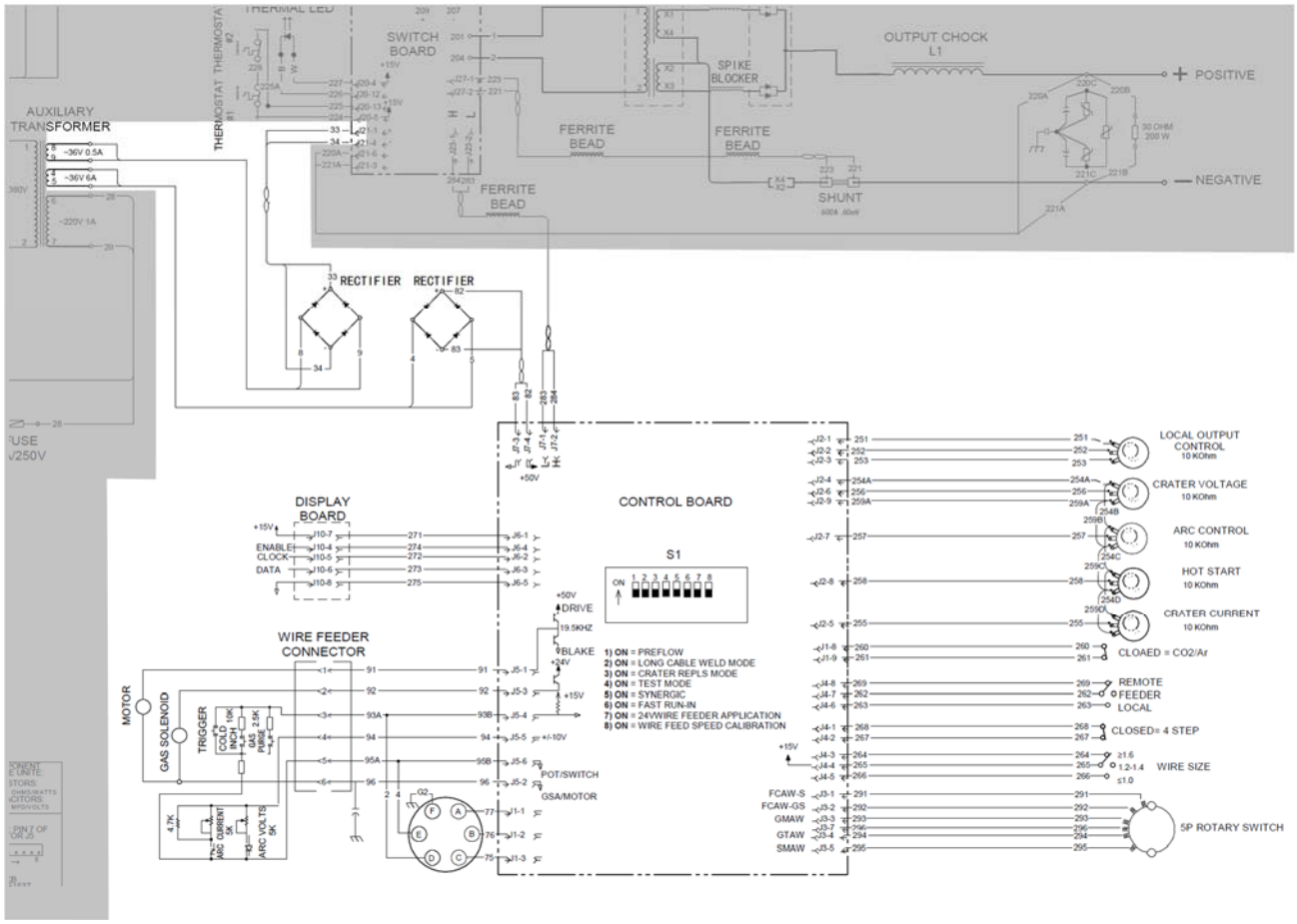

OPERATING PRINCIPLE OF INVERTER

Inverter is one of the four converter technologies in power electronics, it's comparative to rectifier. Rectifier changes from AC to DC, so the process of DC to AC (the inverse process of rectifier) is called inverter.

MAIN CIRCUIT OF INVERTER

FIGURE D.4

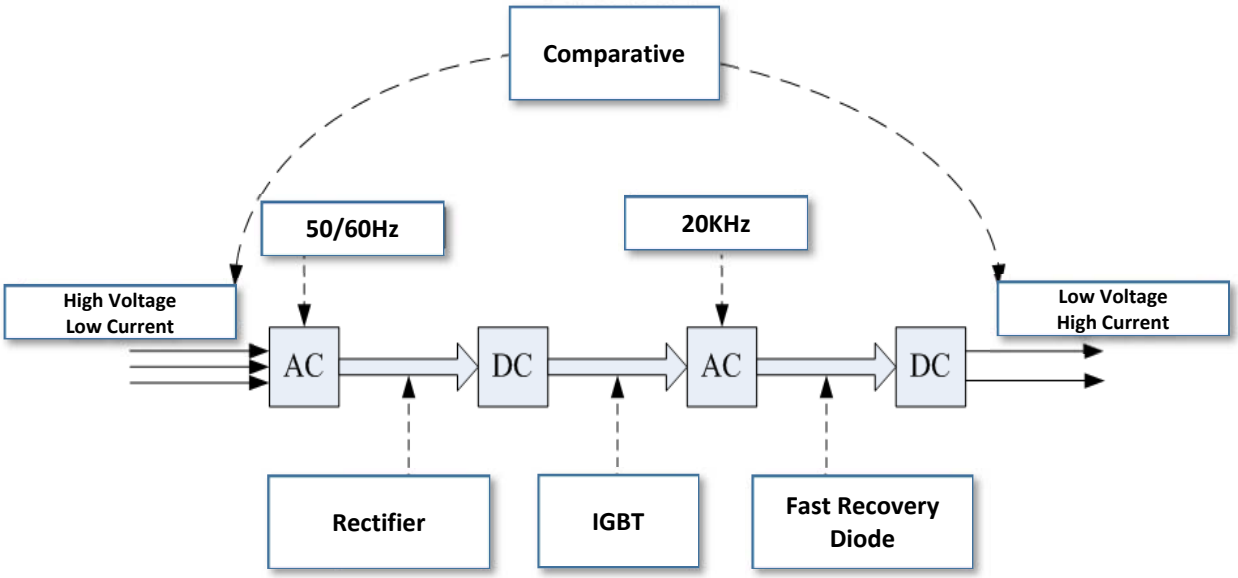

How to Use Troubleshooting Guide E-2

PC Board Troubleshooting Procedures E-3

Troubleshooting Guide E-4

Case Cover Removal E-7

Input Rectifier Removal E-9

Input Rectifier Test E-11

Switchboard Removal E-13

Switchboard Test E-15

Output Rectifier Diode Removal E-17

Output Rectifier Diode Test E-20

Control Board Removal E-22

Aux Transformer Removal E-24

Aux Transformer Test E-26

Output Resistance Test E-28

Functional Test E-29

Wire Feed Speed Calibration Procedure E-31

Voltage and Ampere Meter Calibration Procedure E-32

Retest After Repair E-33

HOW TO USE TROUBLESHOOTING GUIDE

⚠ WARNING

Service and Repair should only be performed by Lincoln Electric Factory Trained Personnel. Unauthorized repairs performed on this equipment may result in danger to the technician and machine operator and will invalidate your factory warranty. For your safety and to avoid Electrical Shock, please observe all safety notes and precautions detailed throughout this manual.

This Troubleshooting Guide is provided to help you locate and repair possible machine malfunctions. Simply follow the three-step procedure listed below.

Step 1. LOCATE PROBLEM (SYMPTOM).

Look under the column labeled "PROBLEM (SYMPTOMS)". This column describes possible symptoms that the machine may exhibit. Find the listing that best describes the symptom that the machine is exhibiting. Symptoms are grouped into the following categories: output problems, operating problems and welding problems.

Step 2. PERFORM EXTERNAL TESTS.

The second column labeled "POSSIBLE AREAS OF MISADJUSTMENT(S)" lists the obvious external possibilities that may contribute to the machine symptom. Perform these tests/checks in the order listed. In general, these tests can be conducted without removing the case wrap-around cover.

Step 3. RECOMMENDED COURSE OF ACTION

The last column labeled "Recommended Course of Action" lists the most likely components that may have failed in your machine. It also specifies the appropriate test procedure to verify that the subject component is either good or bad. If there are a number of possible components, check the components in the order listed to eliminate one possibility at a time until you locate the cause of your problem.

All of the referenced test procedures referred to in the Troubleshooting Guide are described in detail at the end of this chapter. Refer to the Troubleshooting and Repair Table of Contents to locate each specific Test Procedure. All of the specified test points, components, terminal strips, etc. can be found on the referenced electrical wiring diagrams and schematics. Refer to the Electrical Diagrams Section Table of Contents to locate the appropriate diagram.

CAUTION

If for any reason you do not understand the test procedures or are unable to perform the tests/repairs safely, contact the Lincoln Electric Service Department for technical troubleshooting assistance before you proceed.

TEL: 400 820 9755

Mailbox: China_Service@Lincolnelectric.com

PC BOARD TROUBLESHOOTING PROCEDURES

⚠ WARNING

ELECTRIC SHOCK can kill.

Have an electrician install and service this equipment. Turn the input power OFF at the fuse box before working on equipment. Do not touch electrically hot parts.

⚠ CAUTION

Sometimes machine failures appear to be due to PC board failures. These problems can sometimes be traced to poor electrical connections. To avoid problems when troubleshooting and replacing PC boards, please use the following procedure:

1. Determine to the best of your technical ability that the PC board is the most likely component causing the failure symptom.
2. Check for loose connections at the PC board to assure that the PC board is properly connected.
3. If the problem persists, replace the suspect PC board using standard practices to avoid static electrical damage and electrical shock. Read the warning inside the static resistant bag and perform the following procedures:

   PC board can be damaged by static electricity.

ATTENTION
Static-Sensitive Devices Handle only at Static-Safe Workstations

Reusable Container Do Not Destroy

- Remove your body's static charge before opening the static shielding bag. Wear an anti-static wrist strap. For safety, use a 1 Meg ohm resistive cord connected to a grounded part of the equipment frame.
- If you don't have a wrist strap, touch an un-painted, grounded, part of the equipment frame. Keep touching the frame to prevent static build-up. Be sure not to touch any electrically live parts at the same time.
- Tools which come in contact with the PC board must be either conductive, anti-static or static-dissipative.
- Remove the PC board from the static-shielding bag and place it directly into the equipment. Don't set the PC board on or near paper, plastic or cloth which could have a static charge. If the PC board can't be installed immediately, put it back in the static-shielding bag.
- If the PC board uses protective shorting jumpers, don't remove them until installation is complete.
- If you return a PC board to The Lincoln Electric Company for credit, it must be in the static-shielding bag. This will prevent further damage and allow proper failure analysis.

4. Test the machine to determine if the failure symptom has been corrected by the replacement PC board.

   NOTE: Allow the machine to heat up so that all electrical components can reach their operating temperature.
5. Remove the replacement PC board and substitute it with the original PC board to recreate the original problem.
   - If the original problem does not reappear by substituting the original board, then the PC board was not the problem. Continue to look for bad connections in the control wiring harness, junction blocks and terminal strips.
   - If the original problem is recreated by the substitution of the original board, then the PC board was the problem. Reinstall the replacement PC board and test the machine.
6. Always indicate that this procedure was followed when warranty reports are to be submitted.

NOTE: Following this procedure and writing on the warranty report, "INSTALLED AND SWITCHED PC BOARDS TO VERIFY PROBLEM," will help avoid denial of legitimate PC board warranty claims.

Observe Safety Guidelines detailed in the beginning of this manual.

PROBLEMS (SYMPTOMS)	POSSIBLE AREAS OF MISADJUSTMENT(S)	RECOMMENDED COURSE OF ACTION
Major physical or electrical damage is evident when the sheet metal covers are removed.		Contact your local authorized Lincoln Electric Field Service facility for technical assistance.
The machine will not power up. (no lights or displays, and the fan not running.)	1. No power supply.	Make sure the correct power is connected to the machine and the input line switch is turned on.
	2. The line switch maybe faulty.	Check the line switch for proper operation. Also check the associated leads for loose or faulty connections. See the Wiring Diagram.
Thermal LED lights on.	1. Material blocking intake or exhaust louvers, or for excessive dirt clogging cooling channels in machine.	Check and clean the cooling channels.
	2. The Fan maybe faulty.	Check for proper fan operation.
	3. The welding application may be exceeding the recommended duty cycle and/or current limits of the machine.	Check and change the welding application.
The machine doesn't have welding output.	1. Input voltage maybe too low or too high.	Check and correct the input voltage level.
	2. If the thermal protection symbol displays, see thermal LED section.	
	3. If the error code displays, see error code section.	
The machine will not produce full output.	1. Input voltage maybe too low.	Check input voltage level.
	2. Secondary current or voltage is not properly calibrated.	Contact your local authorized Lincoln Electric Field Service facility for technical assistance.
	3. Problem with the current feedback circuit.	Check the current feedback circuit.
"Noodle" welds (output is limited to approximately 100 amps).	Secondary current limit has been exceeded.	Adjust procedure or reduce the output current.
General degradation of the weld performance.	1. Wire feeding problem.	Check and correct.
	2. Bad cable connections or excessive loops in cabling.	Check and correct.
	3. Weld mode is incorrect for processes.	Check and correct.
	4. The power source maybe require calibration.	Contact your local authorized Lincoln Electric Field Service facility for technical assistance.

Observe Safety Guidelines detailed in the beginning of this manual.

PROBLEMS (SYMPTOMS)	POSSIBLE AREAS OF MISADJUSTMENT(S)	RECOMMENDED COURSE OF ACTION
4-step mode does not work.	1. Problem with the current feedback signal.	Check the current feedback circuit.
	2. PC board may be faulty.	Contact your local authorized Lincoln Electric Field Service facility for technical assistance.
The welding arc is not stable or too hard.	1. Incorrect wire or shielding gas.	Check and correct.
	2. Bad welding cable connections.	Check and correct.
	3. Improper output voltage or wire feed speed setting..	Check and correct.
	4. Incorrect polarity is being used.	Check and correct.
	5. PC board may be faulty.	Contact your local authorized Lincoln Electric Field Service facility for technical assistance.
Arc striking is difficult.	1. Incorrect welding procedure, parameters polarity or shielding gas.	Check and correct.
	2. Bad welding cable connections.	Check and correct.
	3. Too much oxide on the surface of work piece.	Check and clean the work piece.
	4. PC board may be faulty.	Contact your local authorized Lincoln Electric Field Service facility for technical assistance.

Observe Safety Guidelines detailed in the beginning of this manual.

PROBLEMS (SYMPTOMS)	POSSIBLE AREAS OF MISADJUSTMENT(S)	RECOMMENDED COURSE OF ACTION
ERROR CODE		
ERR 031	Primary of the Switchboard over current.	Contact your local authorized Lincoln Electric Field Service facility for technical assistance.
ERR 032	Low input line voltage error from the Control Board.	Contact your local authorized Lincoln Electric Field Service facility for technical assistance.
ERR 035	Input voltage out of range.	Make certain that input voltage is proper, according to the Rating Plate.
ERR 036	Thermal protection.	Contact your local authorized Lincoln Electric Field Service facility for technical assistance.
ERR 041	Secondary of the Switchboard over current.	Contact your local authorized Lincoln Electric Field Service facility for technical assistance.
ERR 082	Motor overload.	Check the wire feeding routine or reduce the duty cycle.
ERR 124	Invalid weld mode.	Make certain all the welding procedures are correct.
ERR 213	CAN communication error.	Contact your local authorized Lincoln Electric Field Service facility for technical assistance.

CASE COVER REMOVAL

WARNING

Service and repair should be performed only by Lincoln Electric factory trained personnel. Unauthorized repairs performed on this equipment may result in danger to the technician or machine operator and will invalidate your factory warranty. For your safety and to avoid electrical shock, please observe all safety notes and precautions detailed throughout this manual.

If for any reason you do not understand the test procedures or are unable to perform the test/repairs safely, contact the Lincoln Electric Service Department for electrical troubleshooting assistance before you proceed. **CALL 400 820 9755**

DESCRIPTION

This procedure will aid the technician in the removal and replacement of the Case Covers.

MATERIALS NEEDED

8mm Wrench

PROCEDURE

1. Remove the input power to the OPITIMARC® CV/CC500 machine.
2. Using an 8mm wrench, remove the four screws from the top of the case top and six screws from the both sides of the case top. See Figure E.1.
3. Using an 8mm wrench, remove the eight screws from the right case side. See Figure E.2.
4. Using an 8mm wrench, remove the eight screws from the left case side. See Figure E.3.
5. Remove the case top, the left case side and the right case side.

FIGURE E.1 - CASE TOP REMOVAL

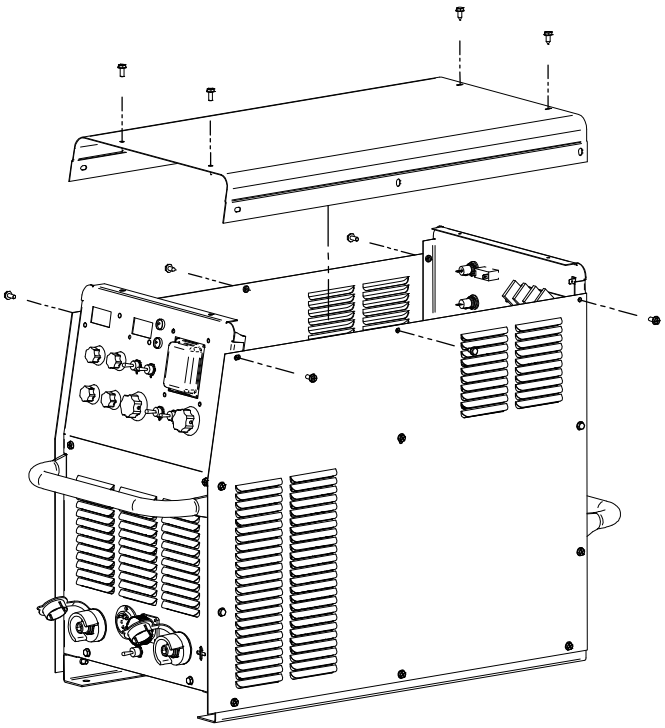

CASE COVER REMOVAL (continued)

FIGURE E.2 – RIGHT CASE SIDE REMOVAL

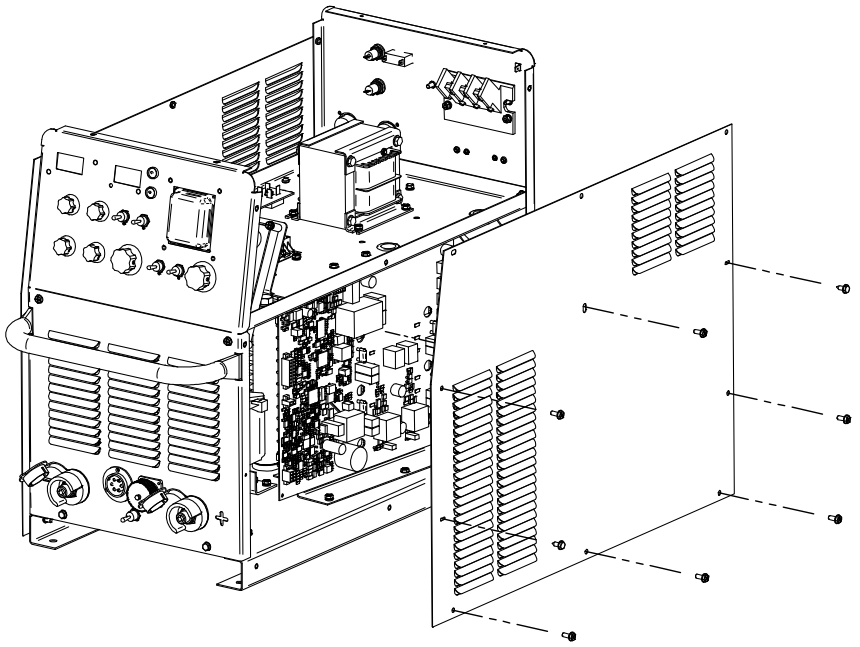

FIGURE E.3 – LEFT CASE SIDE REMOVAL

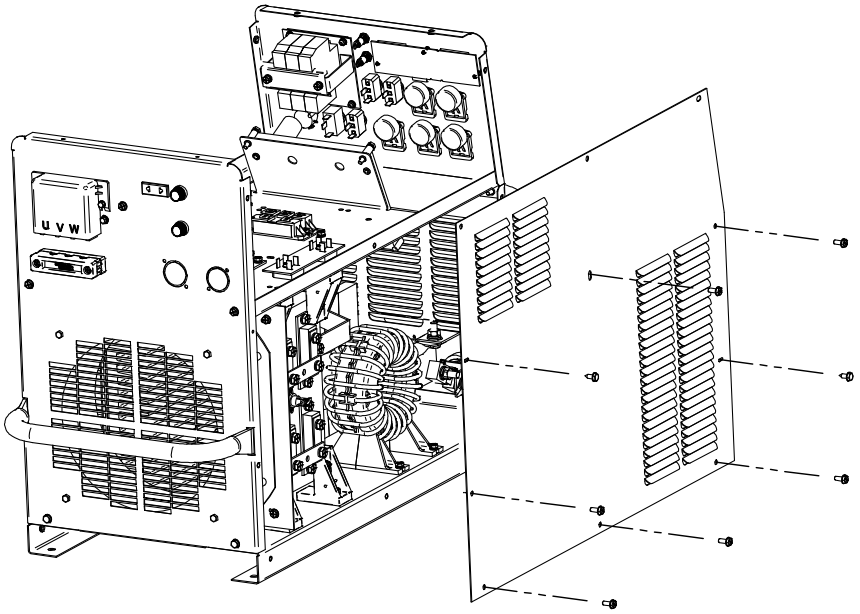

INPUT RECTIFIER REMOVAL

WARNING

Service and repair should be performed only by Lincoln Electric factory trained personnel. Unauthorized repairs performed on this equipment may result in danger to the technician or machine operator and will invalidate your factory warranty. For your safety and to avoid electrical shock, please observe all safety notes and precautions detailed throughout this manual.

If for any reason you do not understand the test procedures or are unable to perform the test/repairs safely, contact the Lincoln Electric Service Department for electrical troubleshooting assistance before you proceed. **CALL 400 820 9755**

DESCRIPTION

This procedure will aid the technician in the removal and replacement of the Input Rectifier.

MATERIALS NEEDED

8mm Wrench

Screwdriver

PROCEDURE

1. Remove the input power to the OPITIMARC® CV/CC500 machine.
2. Perform the **Case Cover Removal Procedure**, remove the case top.

⚠ WARNING **ELECTRIC SHOCK can kill !**
Wait until the Switchboard is fully discharged.

3. Locate the Input Rectifier. See figure E.4. Using a 8mm wrench, remove the MOV assembly from leads 1(19#), 2(20#) and 3(21#), label and remove the input leads and output leads on the Input Rectifier.
   Note: The RTV glue should be applied between the MOV assembly and the terminals after reconnecting.
   Note: Incorrect installation of leads 207 and 209 will cause damage to the PC Board, label them if necessary.
4. Using a screwdriver, remove the two bolts that securing the Input Rectifier. See Figure E.5.
   Note: 0.88CC E2529 should be applied between the rectifier and the heatsink while reassembly.
   Note: Torque the bolt to 2.0 N.M while reassembly.

INPUT RECTIFIER REMOVAL (continued)

FIGURE E.4 - INPUT RECTIFIER LOCATION

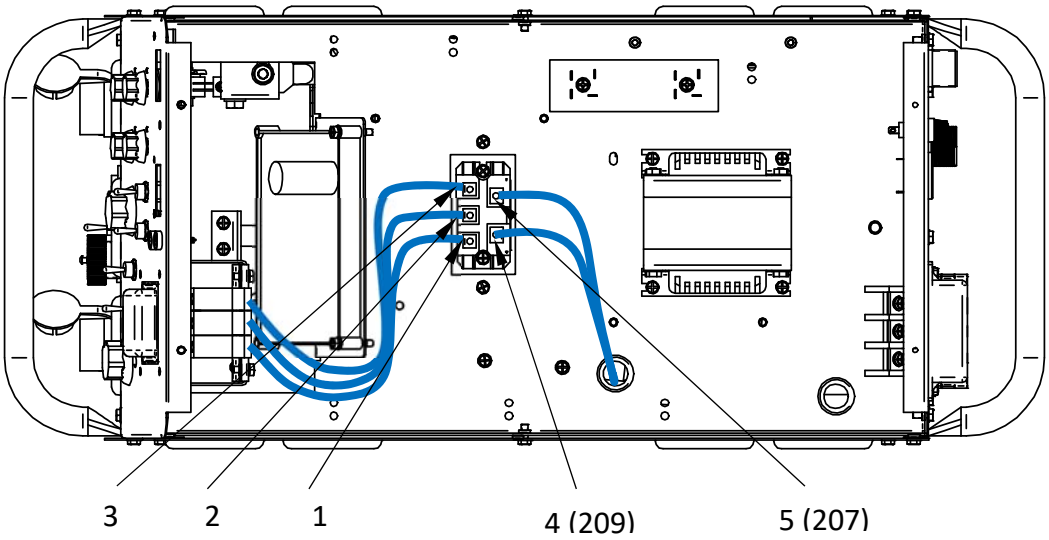

FIGURE E.5 - INPUT RECTIFIER REMOVAL

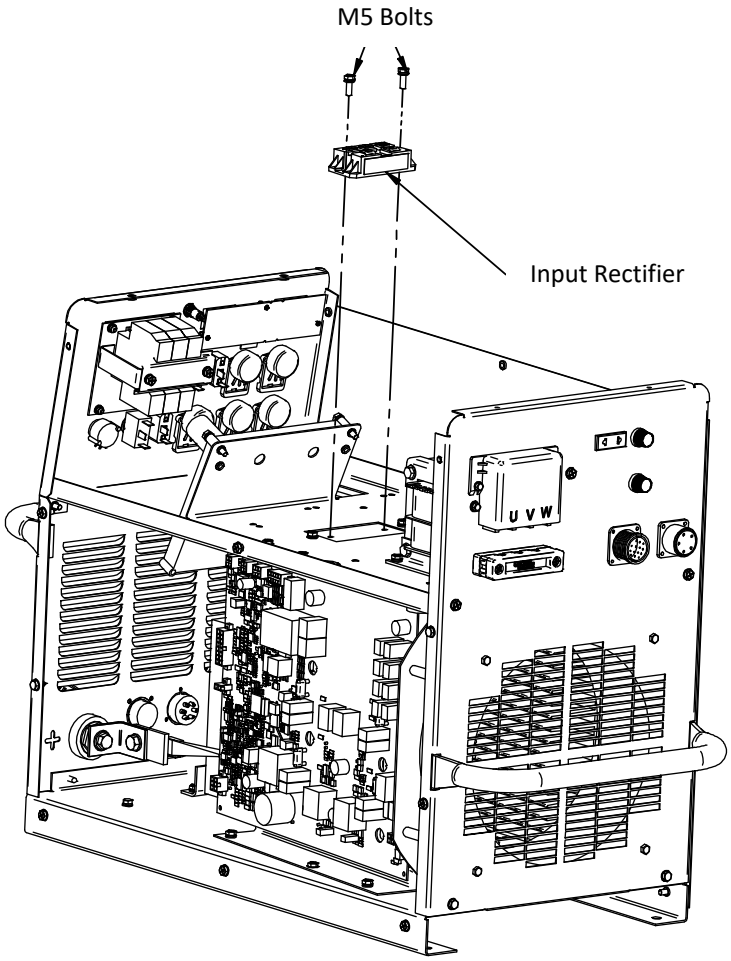

INPUT RECTIFIER TEST

WARNING

Service and repair should be performed only by Lincoln Electric factory trained personnel. Unauthorized repairs performed on this equipment may result in danger to the technician or machine operator and will invalidate your factory warranty. For your safety and to avoid electrical shock, please observe all safety notes and precautions detailed throughout this manual.

If for any reason you do not understand the test procedures or are unable to perform the test/repairs safely, contact the Lincoln Electric Service Department for electrical troubleshooting assistance before you proceed. **CALL 400 820 9755**

DESCRIPTION

This test will help determine if the Input Rectifier is functioning correctly.

MATERIALS NEEDED

8mm Wrench
Multimeter
Wiring Diagram

PROCEDURE

1. Remove the input power to the OPITIMARC® CV/CC500 machine.
2. Perform the **Case Cover Removal Procedure**, remove the case top.

⚠ WARNING **ELECTRIC SHOCK can kill !**
Wait until the Switchboard is fully discharged.

3. Locate the Input Rectifier. See figure E.6. Using an 8mm wrench, remove output leads 207# and 209# from the Input Rectifier.
4. Perform the diode checks per Table E.1. If the measured value deviates greatly from the expected value, the Input Rectifier may be faulty. Perform the **Input Rectifier Removal** and replace it.

Note: The Input Switch and Switchboard should be checked before replace the Input Rectifier.

INPUT RECTIFIER TEST (continued)

FIGURE E.6 - INPUT RECTIFIER

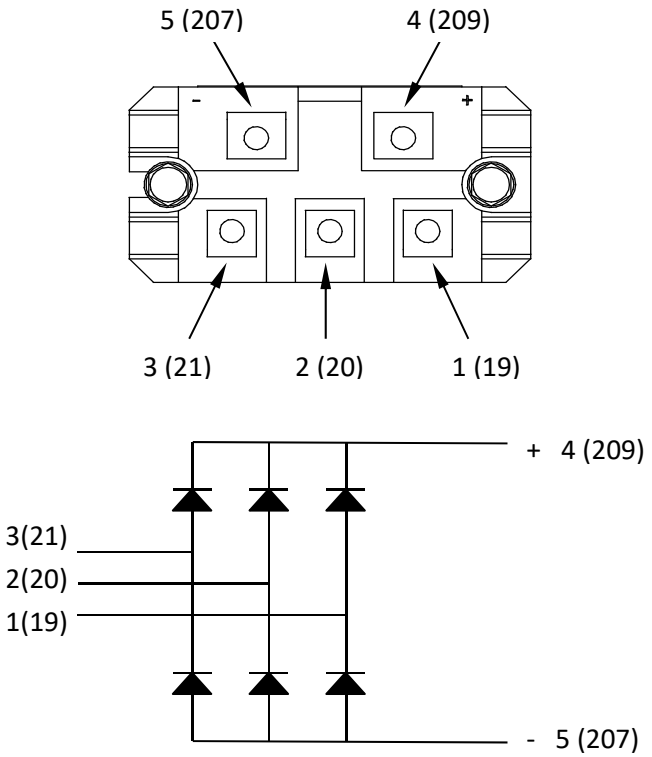

TABLE E.1 – INPUT RECTIFIER STATIC TEST

METER PROBE (+)	METER PROBE (–)	METER MODE	EXPECTED VALUE
1（19）	4（209）	DIODE	0.3－0.7V
2（20）	4（209）	DIODE	0.3－0.7V
3（21）	4（209）	DIODE	0.3－0.7V
4（209）	1（19）	DIODE	OPEN CIRCUIT
4（209）	2（20）	DIODE	OPEN CIRCUIT
4（209）	3（21）	DIODE	OPEN CIRCUIT
5（207）	1（19）	DIODE	0.3－0.7V
5（207）	2（20）	DIODE	0.3－0.7V
5（207）	3（21）	DIODE	0.3－0.7V
1（19）	5（207）	DIODE	OPEN CIRCUIT
2（20）	5（207）	DIODE	OPEN CIRCUIT
3（21）	5（207）	DIODE	OPEN CIRCUIT

SWITCHBOARD ASSEMBLY REMOVAL

WARNING

Service and repair should be performed only by Lincoln Electric factory trained personnel. Unauthorized repairs performed on this equipment may result in danger to the technician or machine operator and will invalidate your factory warranty. For your safety and to avoid electrical shock, please observe all safety notes and precautions detailed throughout this manual.

If for any reason you do not understand the test procedures or are unable to perform the test/repairs safely, contact the Lincoln Electric Service Department for electrical troubleshooting assistance before you proceed. **CALL 400 820 9755**

DESCRIPTION

This procedure will aid the technician in the removal and replacement of the Switchboard Assembly.

MATERIALS NEEDED

8mm Wrench

PROCEDURE

1. Remove the input power to the OPITIMARC® CV/CC500 machine.
2. Perform the **Case Cover Removal Procedure**, remove the case top and the right case side.

⚠ WARNING **ELECTRIC SHOCK can kill !**
Wait until the Switchboard is fully discharged.

3. Locate the Switchboard, disconnect all the plugs J20, J21, J23 & J27 on the board (J22, J24 & J26 do not have plugs when factory default). See Figure E.7.
4. Using an 8mm wrench, remove four bolts securing the leads 201#, 204#, 207# & 209#.
   Note: Each cable is marked with the cable number, do not connect them wrong while reassembly.
   Note: Torque the bolt to 5.0 N.M while reassembly.
5. Using an 8mm wrench, remove five bolts (three at top and two at bottom) securing the Switchboard Assembly, carefully remove the Switchboard Assembly. See Figure E.8.

Note: The voltage and current calibration procedure must be performed after replacing the Switchboard Assembly.
Note: Due to the high assembly requirements between the Switchboard and the heatsink, we do not recommend to separate the Switchboard and the heatsink on site!

SWITCHBOARD ASSEMBLY REMOVAL (continued)

FIGURE E.7 - SWITCHBOARD LOCATION

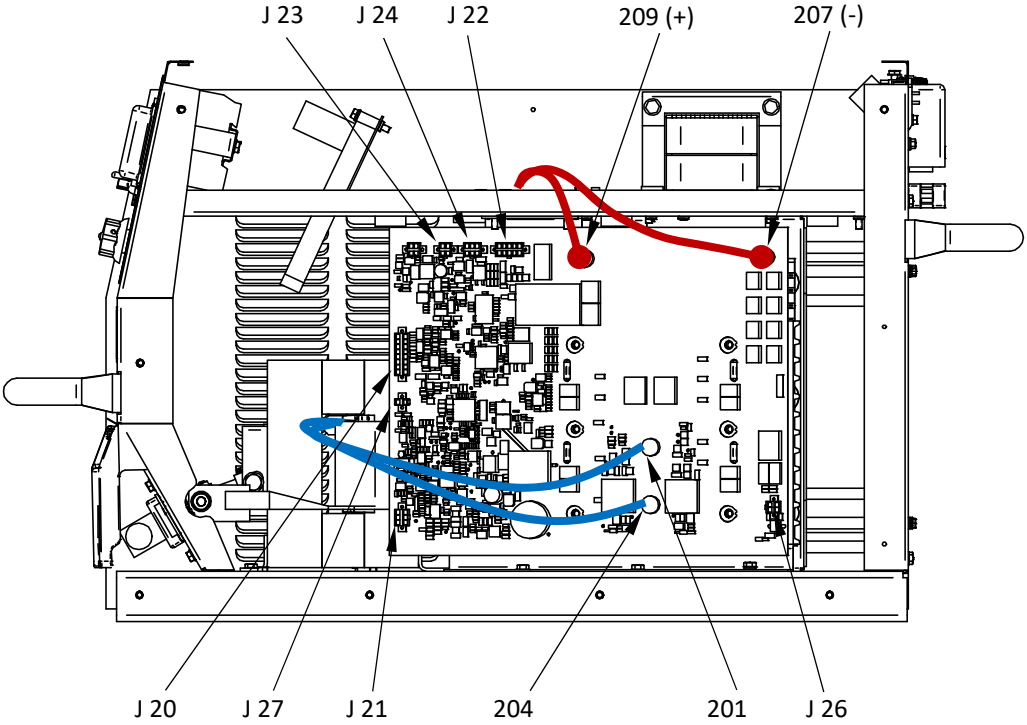

FIGURE E.8 - SWITCHBOARD ASSEMBLY REMOVAL

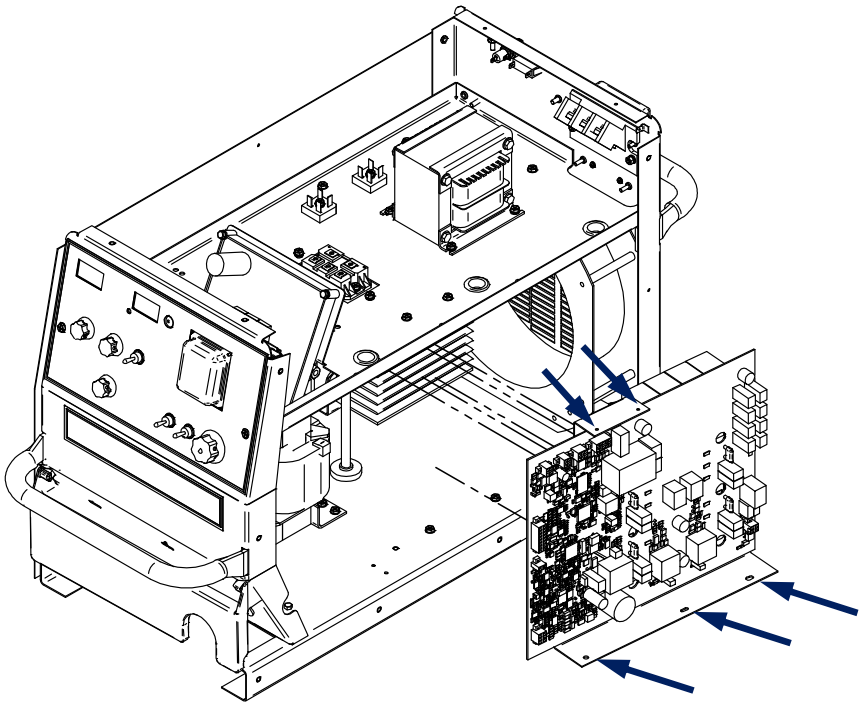

SWITCHBOARD TEST

WARNING

Service and repair should be performed only by Lincoln Electric factory trained personnel. Unauthorized repairs performed on this equipment may result in danger to the technician or machine operator and will invalidate your factory warranty. For your safety and to avoid electrical shock, please observe all safety notes and precautions detailed throughout this manual.

If for any reason you do not understand the test procedures or are unable to perform the test/repairs safely, contact the Lincoln Electric Service Department for electrical troubleshooting assistance before you proceed. **CALL 400 820 9755**

DESCRIPTION

This test will help determine if the invert circuit of the Switchboard is faulty.

MATERIALS NEEDED

8mm Wrench
Multimeter
Wiring Diagram

PROCEDURE

1. Remove the input power to the OPITIMARC® CV/CC500 machine.
2. Perform the **Case Cover Removal Procedure**, remove the case top and the right case side.

⚠ WARNING **ELECTRIC SHOCK can kill !**
Wait until the Switchboard is fully discharged.

3. Locate the Switchboard. Using an 8mm wrench, remove leads 201#, 204#, 207# and 209# from the Switchboard. See figure E.9
4. Remove all plugs from the Switchboard.
5. Perform the diode checks per Table E.2. If the measured value deviates greatly from the expected value, the Switchboard may be faulty. Perform the **Switchboard Assembly Removal** and replace it.

SWITCHBOARD TEST (continued)

FIGURE E.9 - SWITCHBOARD

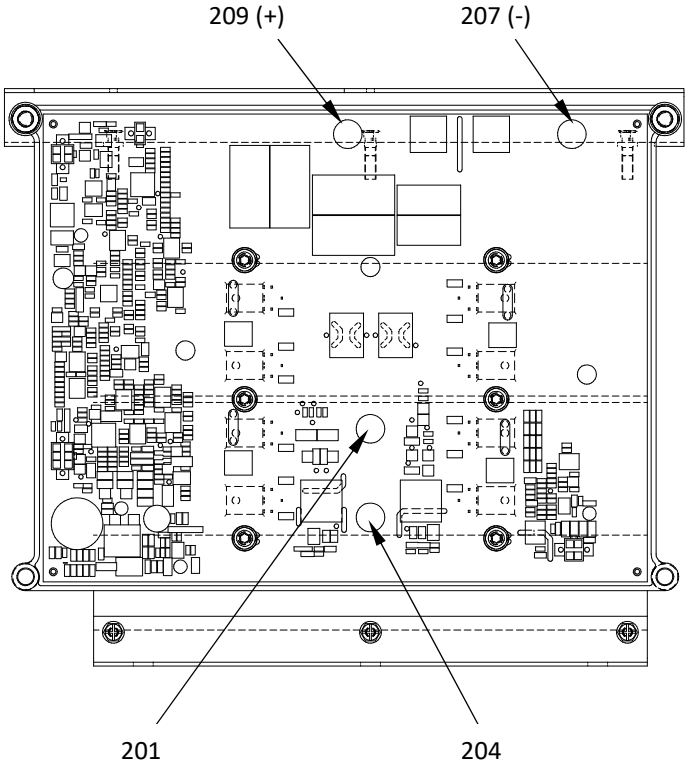

TABLE E.2 – SWITCHBOARD STATIC TEST

METER PROBE (+)	METER PROBE (–)	METER MODE	EXPECTED VALUE
207	204	DIODE	0.25－0.7V
209	204	DIODE	OPEN CIRCUIT
204	207	DIODE	OPEN CIRCUIT
204	209	DIODE	0.25－0.7V
201	207	DIODE	OPEN CIRCUIT
201	209	DIODE	0.25－0.7V
207	201	DIODE	0.25－0.7V
209	201	DIODE	OPEN CIRCUIT

OUTPUT DIODE REMOVAL

WARNING

Service and repair should be performed only by Lincoln Electric factory trained personnel. Unauthorized repairs performed on this equipment may result in danger to the technician or machine operator and will invalidate your factory warranty. For your safety and to avoid electrical shock, please observe all safety notes and precautions detailed throughout this manual.

If for any reason you do not understand the test procedures or are unable to perform the test/repairs safely, contact the Lincoln Electric Service Department for electrical troubleshooting assistance before you proceed. **CALL 400 820 9755**

DESCRIPTION

This procedure will aid the technician in the removal and replacement of the Output Diode.

MATERIALS NEEDED

8mm Wrench

10mm Wrench

PROCEDURE

1. Remove the input power to the OPITIMARC® CV/CC500 machine.
2. Perform the **Case Cover Removal Procedure**, remove the case top and the left case side.
3. Locate the Output Diode (totally four PCS) and input/output harness. Using a 10mm wrench, disconnect two input harness X1 & X3, then disconnect output leads 222#. See Figure E.10.
4. Using a 10mm wrench, remove the eight bolts securing the copper straps, remove the copper straps. See Figure E.11.
5. Using a 10mm wrench, remove the eight bolts securing the Diode Module to the heatsink, carefully remove the Diode Module. See Figure E.12.
   Note: Torque the bolts to 4*.0 N.M while reassembly.*
   Note: Thermal joint compound shall be applied between the Output Diode and the heatsink.

OUTPUT DIODE REMOVAL (continued)

FIGURE E.10

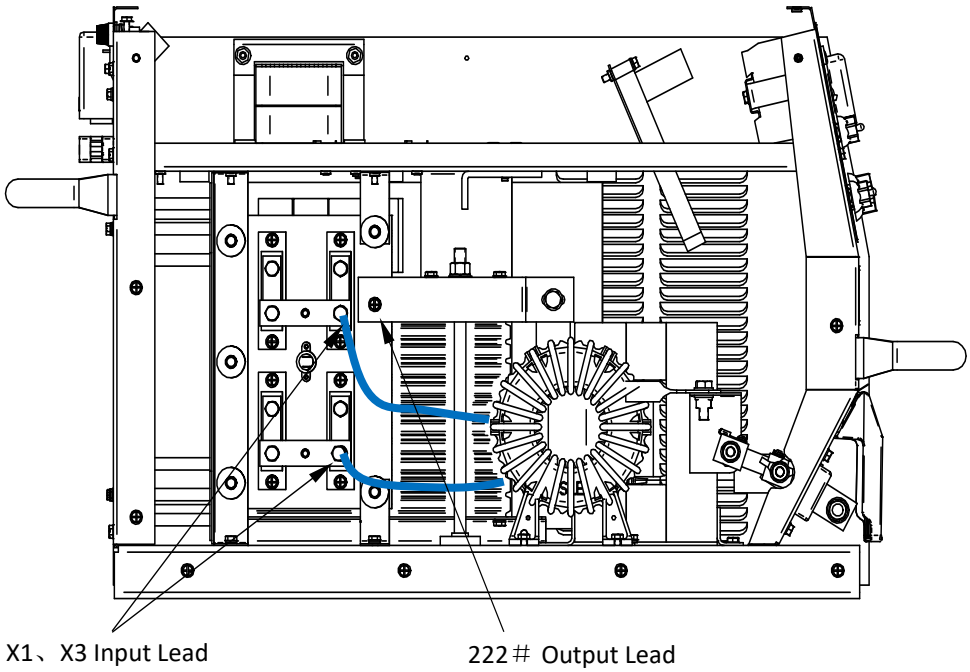

FIGURE E.11

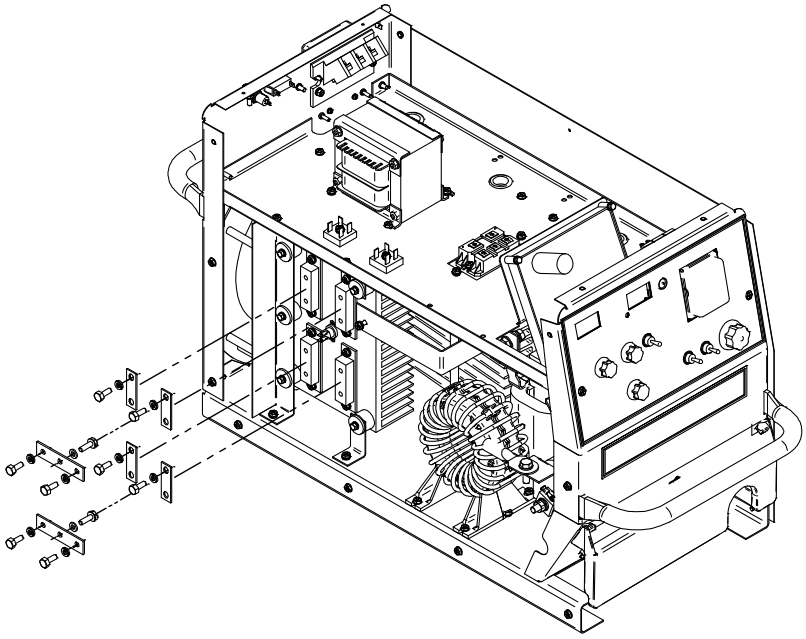

OUTPUT DIODE REMOVAL (continued)

FIGURE E.12

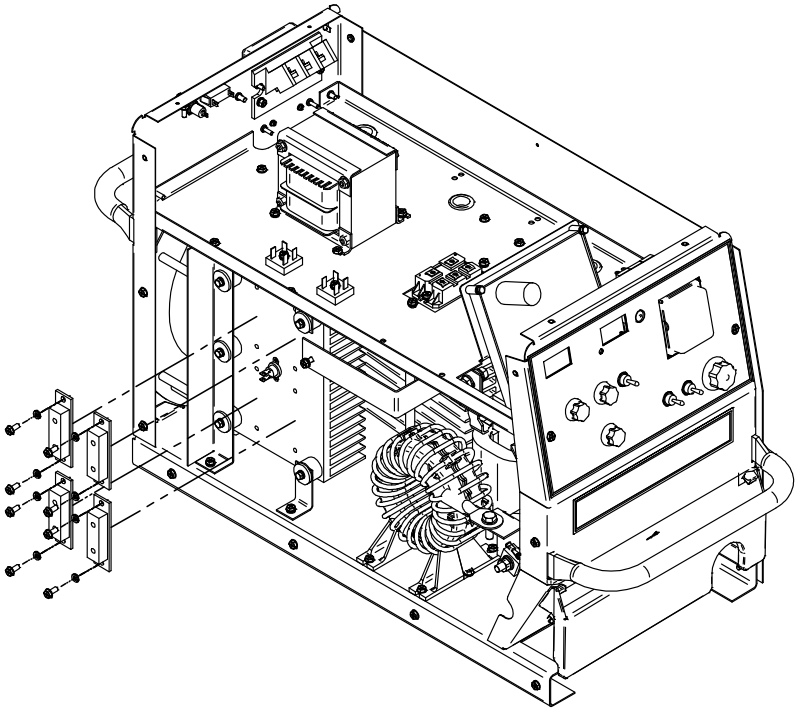

OUTPUT DIODE TEST

WARNING

Service and repair should be performed only by Lincoln Electric factory trained personnel. Unauthorized repairs performed on this equipment may result in danger to the technician or machine operator and will invalidate your factory warranty. For your safety and to avoid electrical shock, please observe all safety notes and precautions detailed throughout this manual.

If for any reason you do not understand the test procedures or are unable to perform the test/repairs safely, contact the Lincoln Electric Service Department for electrical troubleshooting assistance before you proceed. **CALL 400 820 9755**

DESCRIPTION

This test will help determine if the Output Diode is functioning correctly.

MATERIALS NEEDED

8mm Wrench
10mm Wrench
Multimeter
Wiring Diagram

PROCEDURE

1. Remove the input power to the OPITIMARC® CV/CC500 machine.
2. Perform the **Case Cover Removal Procedure**, remove the case top and the left case side.
3. Locate the Output Diode (totally four PCS) and disconnect all input/output harness.
4. Perform the diode checks per Table E.3. If the measured value deviates greatly from the expected value, the Output Diode may be faulty. Perform the **Output Diode Removal** and replace it.

Note: The Switchboard should be checked before replace the Output Diode.

OUTPUT DIODE TEST (continued)

FIGURE E.13 OUTPUT DIODE

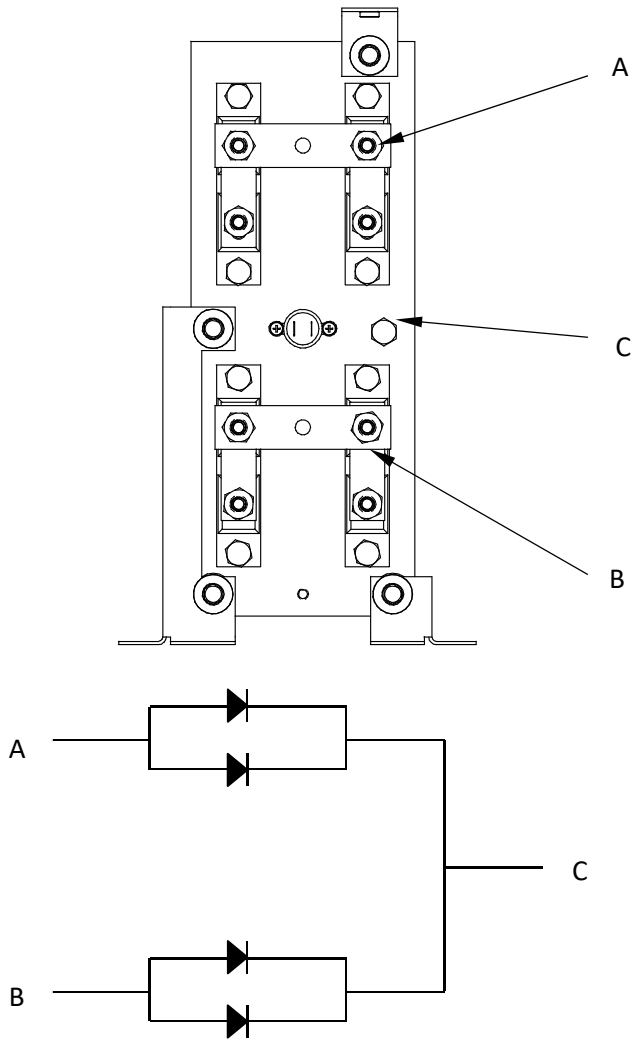

TABLE E.3 – OUTPUT DIODE STATIC TEST

METER PROBE (+)	METER PROBE (–)	METER MODE	EXPECTED VALUE
A	C	DIODE	0.1-0.7V
B	C	DIODE	0.1-0.7V
C	A	DIODE	OPEN CIRCUIT
C	B	DIODE	OPEN CIRCUIT

CONTROL BOARD REMOVAL

WARNING

Service and repair should be performed only by Lincoln Electric factory trained personnel. Unauthorized repairs performed on this equipment may result in danger to the technician or machine operator and will invalidate your factory warranty. For your safety and to avoid electrical shock, please observe all safety notes and precautions detailed throughout this manual.

If for any reason you do not understand the test procedures or are unable to perform the test/repairs safely, contact the Lincoln Electric Service Department for electrical troubleshooting assistance before you proceed. **CALL 400 820 9755**

DESCRIPTION

This procedure will aid the technician in the removal and replacement of the Control Board.

MATERIALS NEEDED

8mm Wrench

PROCEDURE

1. Remove the input power to the OPITIMARC® CV/CC500 machine.
2. Perform the **Case Cover Removal Procedure**, remove the case top.
3. Locate the Control Board, it's behind the front panel. See Figure E.14.
4. Disconnect all the plugs on the Control Board.
5. Using an 8mm wrench, remove the two bolts securing the Control Board, carefully remove the Control Board. See Figure E.15.
   Torque the bolt to 2.0 N.M while reassembly.

CONTROL BOARD REMOVAL (continued)

FIGURE E.14 - CONTROL BOARD LOCATION

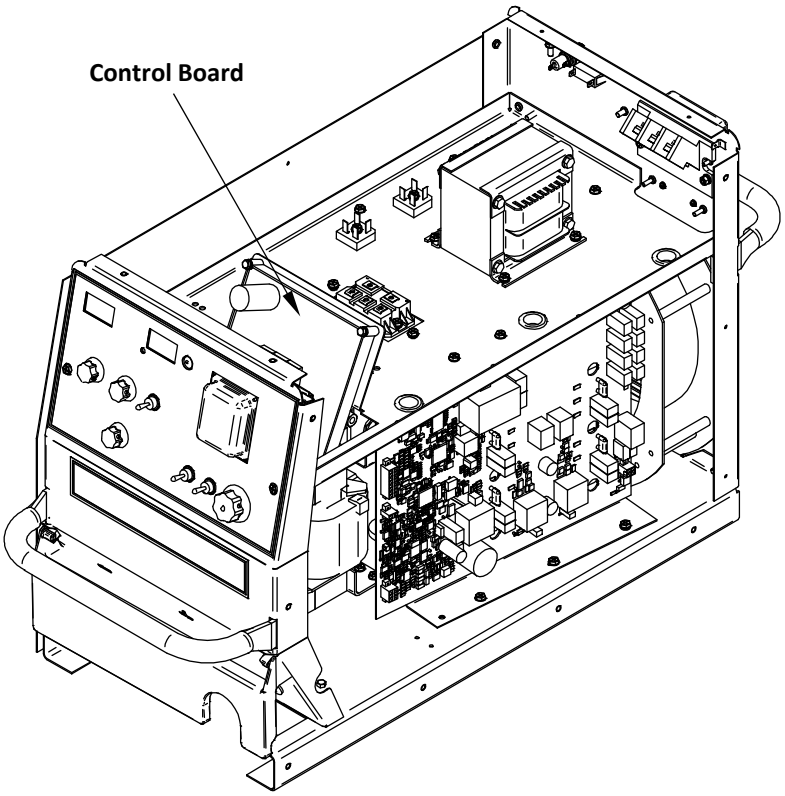

FIGURE E.15 - CONTROL BOARD REMOVAL

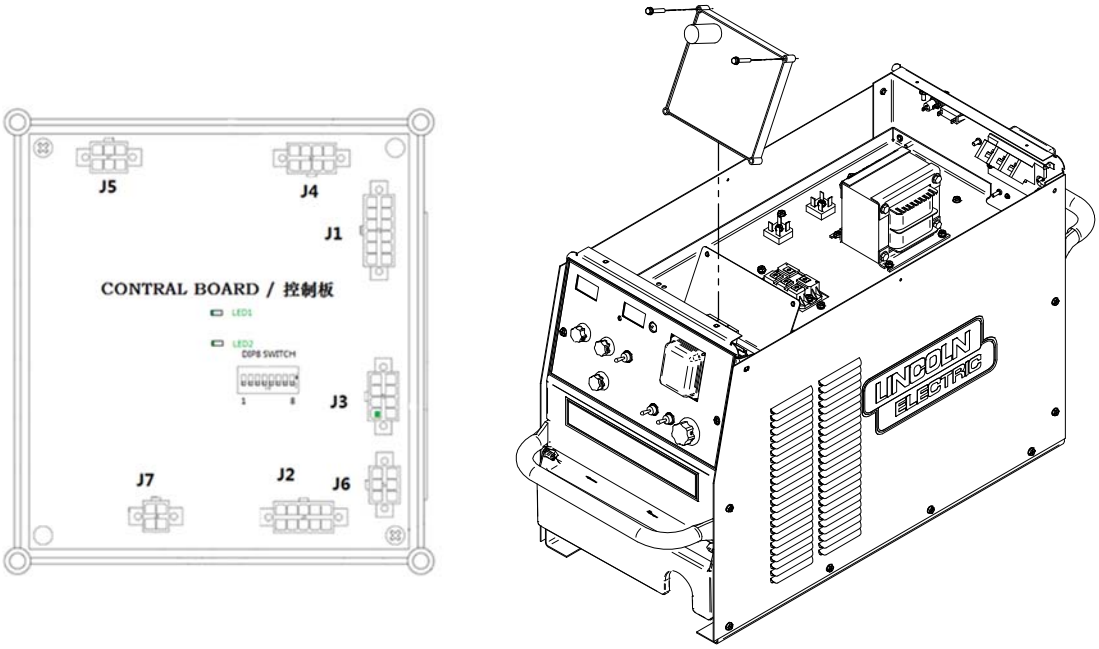

AUX TRANSFORMER REMOVAL

WARNING

Service and repair should be performed only by Lincoln Electric factory trained personnel. Unauthorized repairs performed on this equipment may result in danger to the technician or machine operator and will invalidate your factory warranty. For your safety and to avoid electrical shock, please observe all safety notes and precautions detailed throughout this manual.

If for any reason you do not understand the test procedures or are unable to perform the test/repairs safely, contact the Lincoln Electric Service Department for electrical troubleshooting assistance before you proceed. **CALL 400 820 9755**

DESCRIPTION

This procedure will aid the technician in the removal and replacement of the Aux Transformer.

MATERIALS NEEDED

8mm Wrench

PROCEDURE

1. Remove the input power to the OPITIMARC® CV/CC500 machine.
2. Perform the **Case Cover Removal Procedure**, remove the case top.
3. Locate the Aux Transformer, label and disconnect the primary leads 1#, 2# and secondary leads 4#, 5#, 8#, 9#, 28# & 29#.
4. Using an 8mm wrench, remove the four bolts securing the Aux Transformer to the divider panel. Carefully remove the Aux Transformer from the machine. See Figure E.16.

Note: Torque the bolt to 2.0 N.M while reassembly.

AUX TRANSFORMER REMOVAL (continued)

FIGURE E.16 - AUX TRANSFORMER REMOVAL

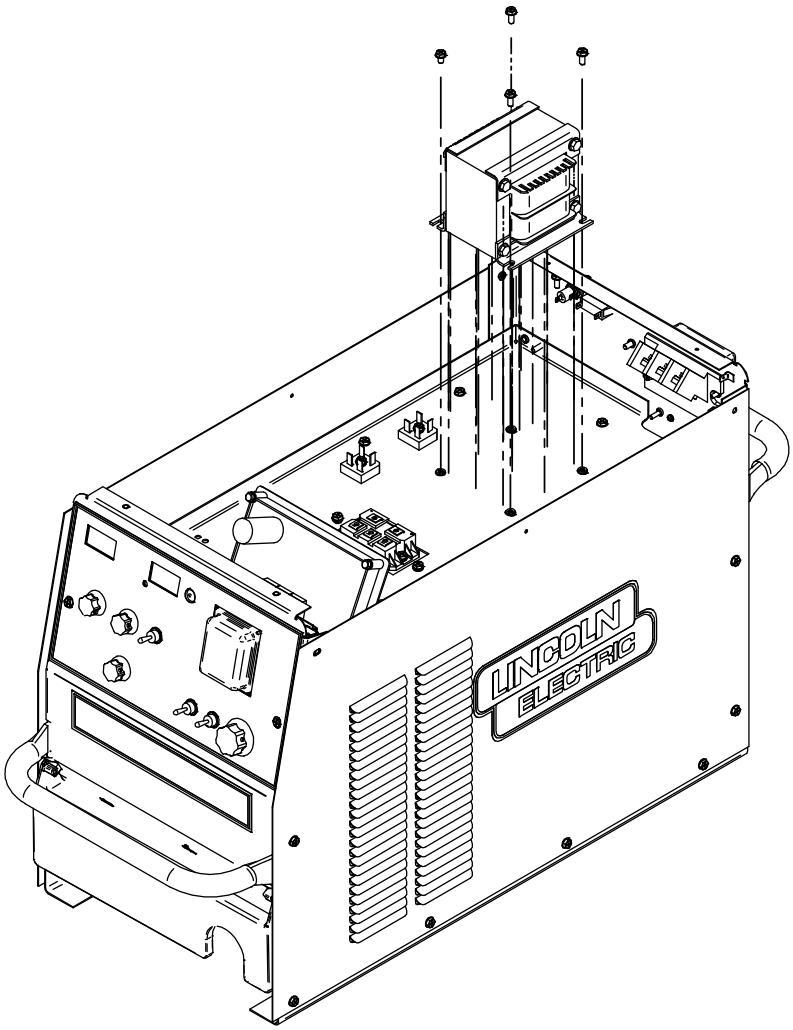

AUX TRANSFORMER TEST

WARNING

Service and repair should be performed only by Lincoln Electric factory trained personnel. Unauthorized repairs performed on this equipment may result in danger to the technician or machine operator and will invalidate your factory warranty. For your safety and to avoid electrical shock, please observe all safety notes and precautions detailed throughout this manual.

If for any reason you do not understand the test procedures or are unable to perform the test/repairs safely, contact the Lincoln Electric Service Department for electrical troubleshooting assistance before you proceed. **CALL 400 820 9755**

DESCRIPTION

This test will help determine if the Aux Transformer is functioning correctly.

MATERIALS NEEDED

8mm Wrench

Multimeter

Wiring Diagram

PROCEDURE

1. Remove the input power to the OPITIMARC® CV/CC500 machine.
2. Perform the **Case Cover Removal Procedure**, remove the case top.
3. Locate the Aux Transformer, label and disconnect the primary and secondary leads. See Figure E.17.
4. Perform the resistor checks per Table E.4.
5. Reconnect the primary and secondary leads to the Aux Transformer. Carefully apply power to the machine and turn the power on. Perform the voltage checks per Table E.5.
   Note: The secondary voltage varies with the primary voltage.
   If the primary voltage is correct and the measured value of secondary voltage deviates greatly from the expected value, the Aux Transformer may be faulty. Perform the **Aux Transformer Removal** and replace it.

AUX TRANSFORMER TEST (continued)

FIGURE E.17 - AUX TRANSFORMER

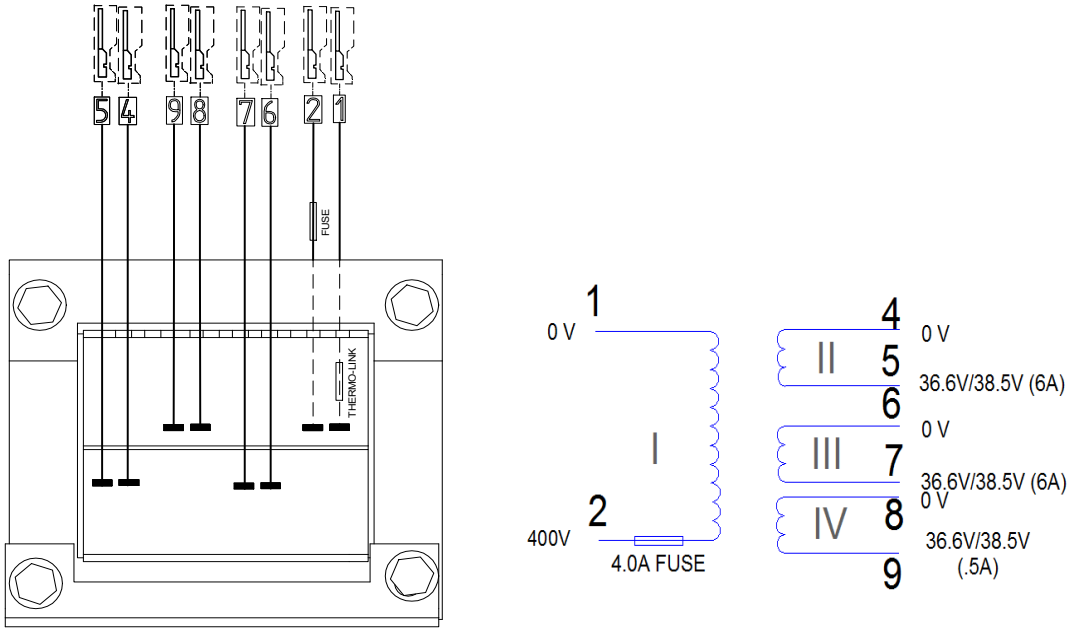

TABLE E.4 – AUX TRANSFORMER STATIC TEST

METER PROBE (+)	METER PROBE (–)	METER MODE	EXPECTED VALUE
1	2	RESISTOR	5Ω
4	5	RESISTOR	0Ω
6	7	RESISTOR	0Ω (code 76210) 5Ω (code 76209)
8	9	RESISTOR	0Ω

TABLE E.5 – AUX TRANSFORMER ACTIVE TEST

METER PROBE (+)	METER PROBE (–)	METER MODE	EXPECTED VALUE
1	2	AC VOLTAGE	AC400V ±10%
4	5	AC VOLTAGE	AC36V-38V
6	7	AC VOLTAGE	AC36V-38V (code 76210) AC190V-200V (code 76209)
8	9	AC VOLTAGE	AC36V-38V

OUTPUT RESISTANCE TEST

WARNING

Service and repair should be performed only by Lincoln Electric factory trained personnel. Unauthorized repairs performed on this equipment may result in danger to the technician or machine operator and will invalidate your factory warranty. For your safety and to avoid electrical shock, please observe all safety notes and precautions detailed throughout this manual.

If for any reason you do not understand the test procedures or are unable to perform the test/repairs safely, contact the Lincoln Electric Service Department for electrical troubleshooting assistance before you proceed. **CALL 400 820 9755**

DESCRIPTION

This test will help determine if the main circuit and keeper resistor is functioning correctly.

MATERIALS NEEDED

17mm Wrench

Multimeter

Wiring Diagram

PROCEDURE

1. Remove the input power to the OPITIMARC® CV/CC500 machine.
2. Lift the cover of the output terminal, using a 17mm wrench, unsecrw the nuts at the positive and negative terminals, remove work cable and electrode cable from the output terminals. See Figure E.18.
3. Perform the resistor check, the resistance of the output terminal should be 29 ~ 31 ohms.
   If the resistance is too small or too large, please further check the keeper resistor or output rectifier diode.

Figure E.18

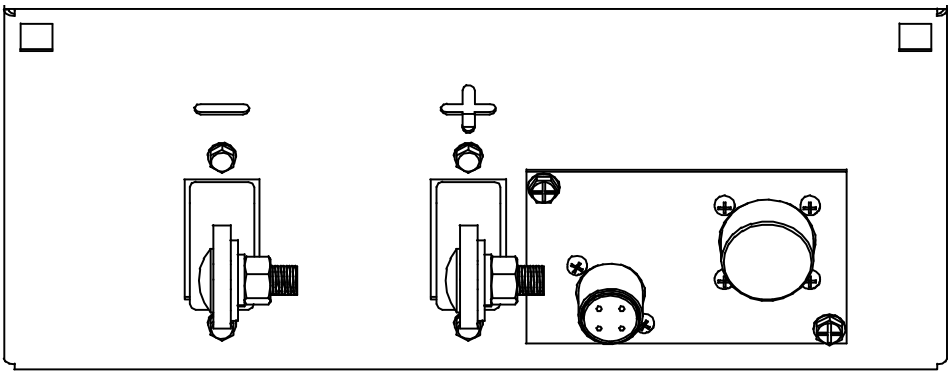

FUNCTIONAL TEST

WARNING

Service and repair should be performed only by Lincoln Electric factory trained personnel. Unauthorized repairs performed on this equipment may result in danger to the technician or machine operator and will invalidate your factory warranty. For your safety and to avoid electrical shock, please observe all safety notes and precautions detailed throughout this manual.

If for any reason you do not understand the test procedures or are unable to perform the test/repairs safely, contact the Lincoln Electric Service Department for electrical troubleshooting assistance before you proceed. **CALL 400 820 9755**

DESCRIPTION

This test will help determine if the connection of equipment is functioning correctly.

MATERIALS NEEDED

8mm Wrench

PROCEDURE

1. Remove the input power to the OPITIMARC® CV/CC500 machine.
2. Perform the **Case Cover Removal Procedure**, remove the case top.
3. Locate the Control Board, set all the DIP switches to OFF except 4# to ON.
   Note: Please record the initial position of DIP switches before setting so that it can be restored after the test.
4. Set the switches and potentiometers on the front panel as below:
   - Process Selection Switch – **FCAW-S** Position
   - 2-Step/4-Step Switch – **2-Step** position
   - Wire Size Selection Switch – **1.2/1.4mm** position
   - Gas Selection Switch – **CO2** position
   - Local/Feeder/Remote Switch – **LOCAL** Position
   - Crater Current Potentiometer - **Fully Counter-Clockwise**
   - Crater Voltage Potentiometer - **Fully Clockwise**
   - Arc Control Potentiometer - **Fully Counter-Clockwise**
   - Hot Start Potentiometer - **Fully Counter-Clockwise**
   - Output Control Potentiometer – **Fully Counter-Clockwise**
   - Feeder Current Potentiometer - **Fully Counter-Clockwise**
   - Feeder Voltage Potentiometer - **Fully Counter-Clockwise**
   - 6 pin remote connector - **Remote Potentiometer Fully Counter-Clockwise and trigger open** (if present)
5. Turn on the power to the OPITIMARC® CV/CC500 machine, the thermal LED will turn on 1 second then off. The displays will show “8.8.8. 8.8.8.”, then software version (left: wire feed motor, right: welding). "--- ---" will be displayed after about 5 seconds.
6. Using the Wire Size Switch to switch the test items listed in table E.5. To step forward, pull the switch up and then back to the middle position; to step backward, pull the switch down and then back to the middle position.
7. Turn off the power to the machine. Reset all DIP switches to their initial settings.

FUNCTIONAL TEST (continued)

TABLE E.5 – FUNCTIONAL TEST

TEST ITEMS (Current meter)	ACTUAL TESTED PARTS	INSPECTED VALUES (Voltage meter)
1	Crater current pot	0~100 Variable
2	Crater voltage pot	0~100 Variable
3	Arc control pot	0~100 Variable
4	Feeder voltage pots	0~100 Variable
5	Feeder current pots	0~100 Variable
6	All of switch on original position	1
	Trigger on torch	33（Closed）
	Gas purge switch on feeder	65（Pressed）
	Cold feeding switch on feeder	129（Pressed）
	2/4 step on front panel of machine	3 (4 step position)
	CO2 or CO2/Ar switch	9 (CO2)
	Local / Feeder/Remote control switch	4 (Remote)
	Local / Feeder/Remote control switch	0 (Feeder)
7	5-position process switch	0（FCAW-SS）
		1（FCAW-GS）
		2（GMAW）
		3（GTAW）
		4（SMAW）
8	Display and Synergic led	Display “8.8.8” “8.8.8”,Synergic LED bright
9	---	---
10	Hot start pot	0~100 Variable
11	Local output pot	0~100 Variable
12	Remote control box pot	0~100 Variable

WIRE FEED SPEED CALIBRATION PROCEDURE

MATERIALS NEEDED

8mm Wrench

Tachometer or band tape

PROCEDURE

1. Remove the input power to the OPITIMARC® CV/CC500 machine.
2. Perform the **Case Cover Removal Procedure**, remove the case top.
3. Set DIP switch on the Control Board as below:
   DIP 1~7: OFF
   DIP 8: ON
   Note: Please record the initial position of DIP switches before setting so that it can be restored after the test.
4. Turn on power to the machine, set the front panel to: GMAW / CO2 / 1.2mm / 2-Step.
5. Turn the CURRENT knob at the feeder fully counter-clockwise. The display will show “SPd 2.5”.
6. Press and hold the trigger, adjust the crater current pot until the measured wire feed speed matches 2.5 m/min. (LWF-24 Plus: 23 RPM)
7. Release the trigger. Switch the crater switch to the ON position and then back to the OFF position. The speed calibration information for the low feed speed is recorded. The display will show “CAL dun”.
8. Turn the CURRENT knob at the feeder fully clockwise. The display will show “SPd 15.0”.
9. Press and hold the trigger, adjust the crater current pot until the measured wire feed speed matches 15 m/min. (LWF-24 Plus: 136 RPM)
10. Release the gun trigger. Switch the crater switch to the ON position and then back to the OFF position. The speed calibration information for the high feed speed is recorded. The display will show “CAL dun”.
11. Turn off the power to the machine. Reset all DIP switches to their initial settings.
12. Power on the machine. Pre-set the current to 350A, verify the wire feed speed is 139±2 rpm.

Note: The maximum or minimum wire feeding speed can be set according to customer needs.

VOLTAGE AND AMPERE METER CALIBRATION PROCEDURE

MATERIALS NEEDED

Calibrated Test Voltmeter
Calibrated Test Ammeter
Resistive Load Bank
8mm Wrench
Phillips Screwdriver

PROCEDURE

1. Remove the input power to the OPITIMARC® CV/CC500 machine.
2. Perform the **Case Cover Removal Procedure**, remove the right case side.
3. Locate the Control Board, set all the DIP switches to OFF except 4# to ON.
   Note: Please record the initial position of DIP switches before setting so that it can be restored after the test.
4. Connect wire feeder or control box to the machine.
5. Connect the voltage meter between positive terminal and negative terminal.
6. Connect the current meter in the output line.
7. Turn on the power to the machine. Press and hold the trigger without connecting the load bank.
8. Tune the potentiometer R249 on the Switchboard with a Phillips screwdriver, until the OCV is 60V. See Figure E.19.
9. Connect the load bank to output terminals of the machine.
10. Adjust the load bank and output of the machine to get the output as following table:

Output Current (A)	100 ±2	200 ±2	500 ±5
Output Voltage (V)	19±1	24±1	39±1

11. Tune the potentiometer R249 on the Switchboard with a Phillips screwdriver, until the machine display voltage value consistent with the test voltage meter reading.
12. Tune the potentiometer R207 on the Switchboard with a Phillips screwdriver, until the machine display current value consistent with the test current meter reading.
13. Turn off the power to the machine. Reset all DIP switches to their initial settings.

Figure E.19 – POT LOCATION

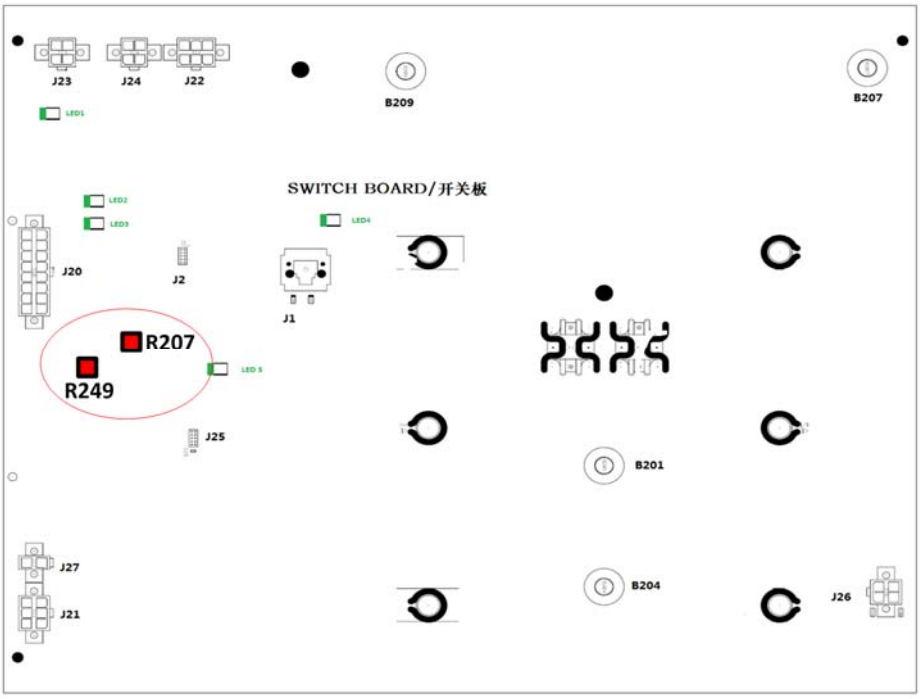

RETEST AFTER REPAIR

Service and repair should be performed only by Lincoln Electric factory trained personnel. Unauthorized repairs performed on this equipment may result in danger to the technician or machine operator and will invalidate your factory warranty. For your safety and to avoid electrical shock, please observe all safety notes and precautions detailed throughout this manual.

If for any reason you do not understand the test procedures or are unable to perform the test/repairs safely, contact the Lincoln Electric Service Department for electrical troubleshooting assistance before you proceed. **CALL 400 820 9755**

DESCRIPTION

This procedure will aid the technician in testing the OPITIMARC® CV/CC500 after the repair or replacement of a part or PC board.

MATERIALS NEEDED

Multimeter
Resistive Load Bank

TEST CONTENTS

I. **Resistance between Positive and Negative Terminals (open circuit): 29~31 ohms.**

II. **Open Circuit Voltage: DC60V.**

III. Output Range

ITEM	MIN. OUPUT	MAX. OUTPUT
Output Current (A)	50±2	500±10
Output Voltage (V)	16±1	39±1

IV. Input Current

Measure and record input current of each phase in idle status. The value should be less than 1A, and the difference between phases shall be less than 0.5A.

V. Calibrate of Voltage and Current Display

Refer to ***VOLTAGE AND AMPERE METER CALIBRATION PROCEDURE***.

VI. Calibrate of Wire Feed Speed

Refer to ***WIRE FEED SPEED CALIBRATION PROCEDURE***.

Wiring Schematic - 76209 ..... F-2

Wiring Schematic - 76210 ..... F-3

LED & Additional Descriptions of PC Boards F-4

OPTIMARC CV/CC500 WIRING SCHEMATIC

CODE: 76209

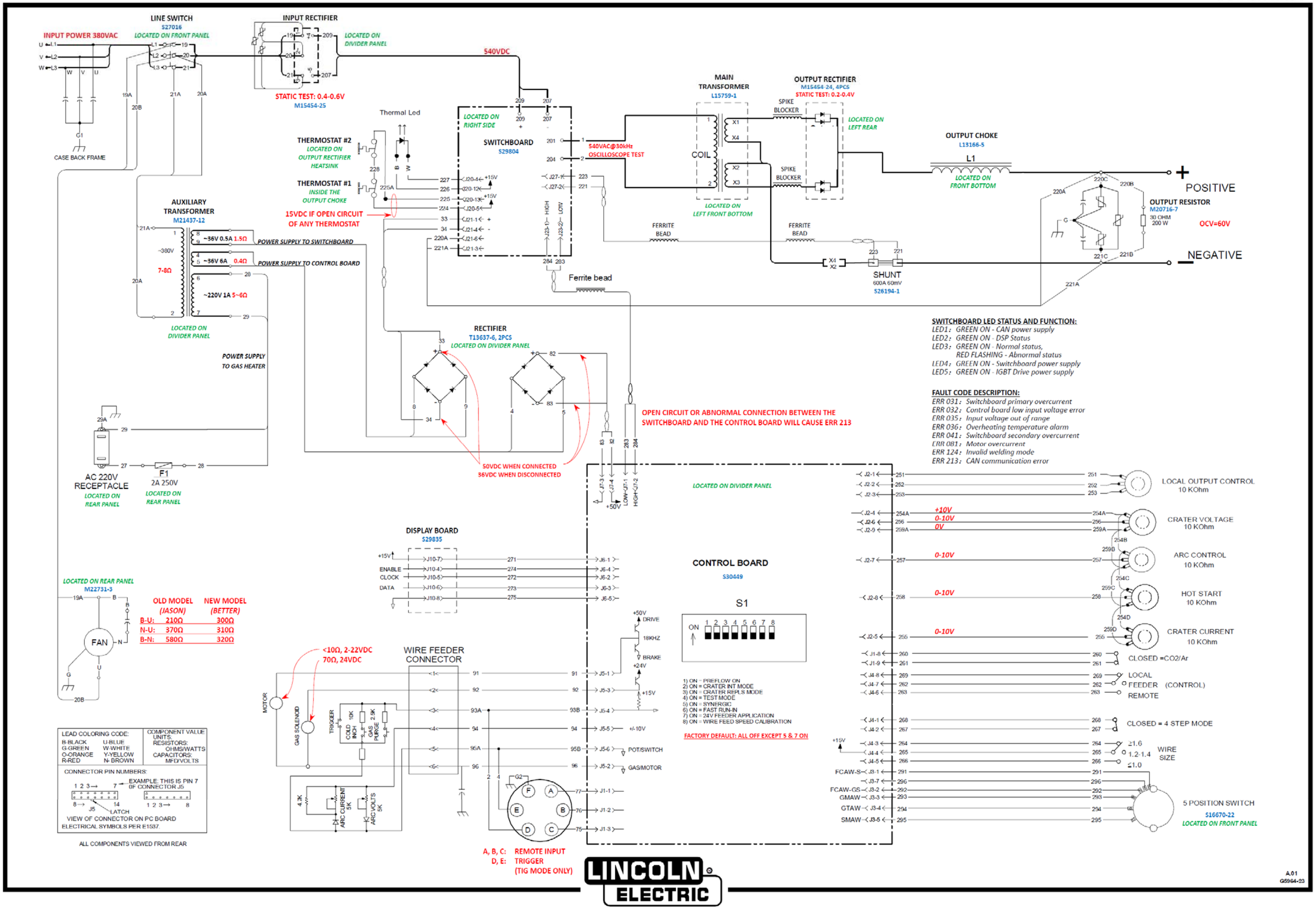

LINCOLN ELECTRIC

OPTIMARC CV/CC500 接线图

CODE: 76210

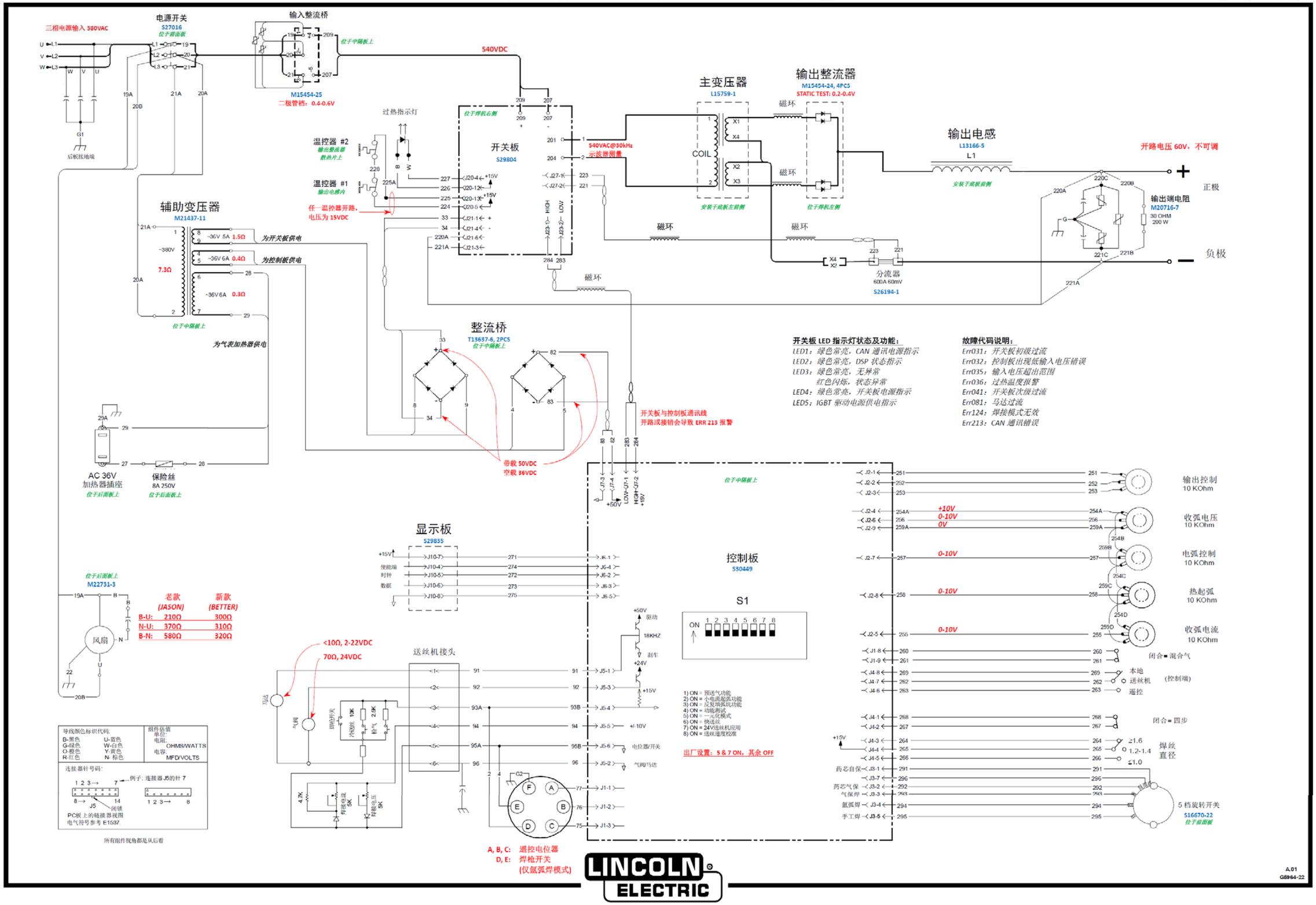

LED & ADDITIONAL DESCRIPTIONS OF PC BOARDS

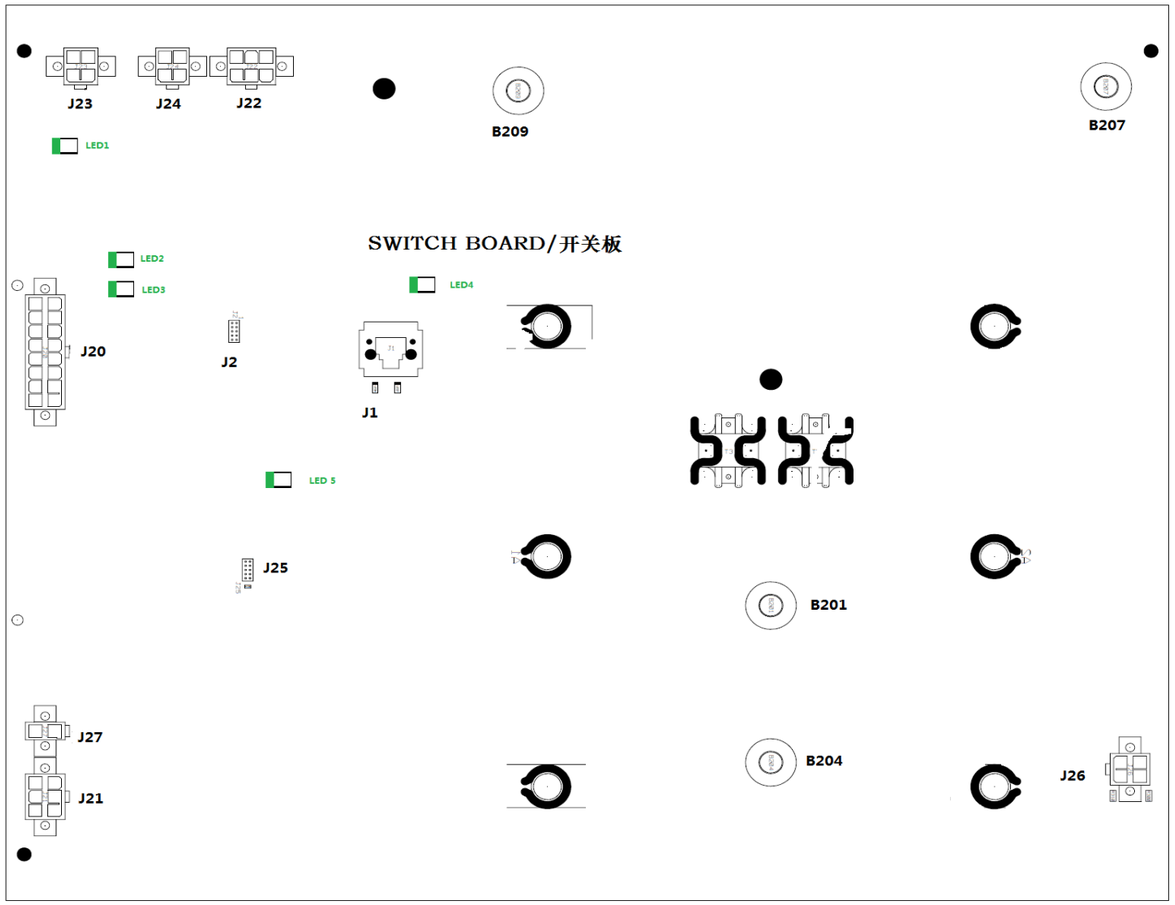

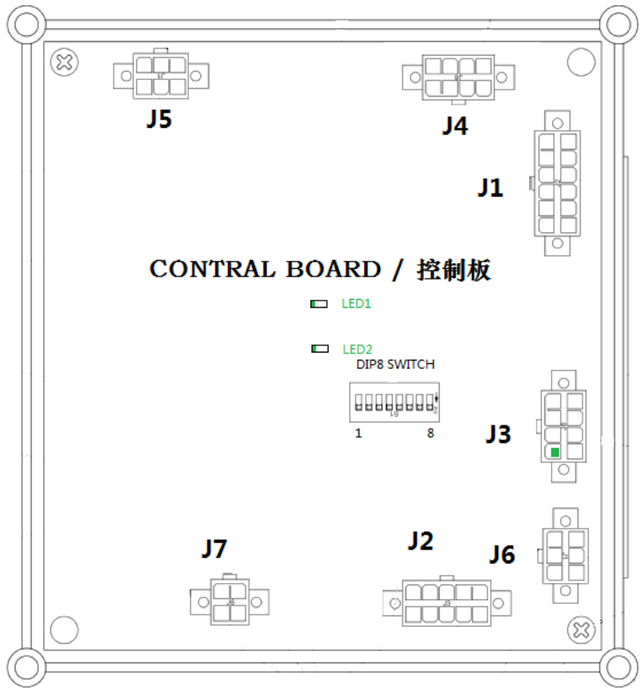

开关板 LED 功能描述 DESCRIPTION OF LED FUNCTIONS ON SWITCHBOARD

LED#	颜色 Color	功能 FUNCTION
1	GREEN 绿色	CAN 通讯电源正常 CAN COMMUNICATION POWER SUPPLY “OK”
2	GREEN 绿色	DSP 状态指示正常 DSP STATUS “OK”
3	GREEN 绿色	异常状态指示灯，绿色表示正常，故障时转为红色闪烁 NORMALLY GREEN, FLASHING RED WHEN STATUS “ERROR”
4	GREEN 绿色	开关板电源指示灯 SWITCH BOARD POWER SUPPLY “OK”
5	GREEN 绿色	IGBT 驱动电源指示灯 IGBT DRIVER POWER SUPPLY “OK”

控制板 LED 功能描述
DESCRIPTION OF LED FUNCTIONS ON CONTROL BOARD

LED#	颜色 Color	功能 FUNCTION
1	绿色 GREEN	机器工作正常 MACHINE STATUS “OK”
2	红色 RED	机器出现异常 MACHINE STATUS “ERROR”

8 位拨码开关功能 DIP SWITCH FUNCTIONS	
1	ON=PREFLOW ON 预送气功能
2	ON=LONG CABLE WELD MODE 长电缆焊接模式
3	ON=CRATER REPLS MODE 反复填弧坑功能
4	ON=TEST MODE 功能测试
5	ON=SYNERGIC 一元化模式
6	ON=FAST RUN-IN 快速送丝
7	ON=24V FEEDER APPLICATION 24V 送丝机应用
8	ON=WIRE FEED SPEED CALIBRATION 送丝速度校准

World's Leader in Welding and Cutting

THE SHANGHAI LINCOLN ELECTRIC COMPANY

No. 195, Lane 5008, Hu Tai Rd. Baoshan, Shanghai, PRC 201907

www.lincolnelectric.com.cn