IM3210
12/2025
REV04

SPRINTER® 160S / 180S

OPERATOR'S MANUAL



ENGLISH

Lincoln Electric Bester Sp. z o.o.
ul. Jana III Sobieskiego 19A, 58-260 Bielawa, Poland
www.lincolnelectric.eu

12/05

THANK YOU! For choosing the QUALITY of the Lincoln Electric products.

- Please check packaging and equipment for damage. Claims for material damaged in shipment must be notified immediately to the dealer.
- For ease of use, please enter your product identification data in the table below. Model Name, Code & Serial Number can be found on the machine rating plate.

Model Name:	
.....	
Code & Serial number:	
.....	.....
Date & Where Purchased:	
.....	.....

ENGLISH INDEX

Technical Specifications 1
ECO design information 3
Electromagnetic Compatibility (EMC) 5
Safety 6
Installation and Operator Instructions 8
WEEE 15
Spare Parts 15
Authorized Service Shops Location 15
Electrical Schematic 15
Accessories 16
Dimension Diagram 17

Technical Specifications

03/25

NAME	INDEX
SPRINTER® 160S	**K14436-1**
SPRINTER® 180S	**K14437-1**

INPUT			
	Input Voltage U_1	EMC Class	Frequency
SPRINTER® 160S	230V ± 10%, 1-phase 120V ± 10%, 1-phase	A	50/60Hz
SPRINTER® 180S			
	Input Power at Rated Cycle	Input Amperes I_{1max}	Power factor for max input current
SPRINTER® 160S	5,2kVA @ 1x230V, 45% Duty Cycle	22,5A	0,99
	2,5kVA @ 1x120V, 25% Duty Cycle	20,6A	
SPRINTER® 160S	6kVA @ 1x230V, 35% Duty Cycle	25,5A	
	2,5kVA @ 1x120V, 25% Duty Cycle	20,6A	

RATED OUTPUT						
	Process	Input Voltage	Open Circuit Voltage peak	Duty Cycle 40°C (based on a 10 min. period)	Output Current	Output Voltage
SPRINTER® 160S	SMAW	1x230V	95V	45%	160A	26,4V
				60%	150A	26V
				100%	110A	24,4V
SPRINTER® 180S				35%	180A	27,2V
				60%	150A	26V
				100%	110A	24,4V
SPRINTER® 160S		1x120V		60%	85A	23,4V
				100%	60A	24,4V
SPRINTER® 180S				60%	85A	23,4V
				100%	60A	22,4V
SPRINTER® 160S	GTAW (Lift TIG)	1x230V	14V	45%	180A	17,2V
				60%	160A	16,4V
				100%	120A	14,8V
SPRINTER® 180S				25%	200A	18V
				60%	160A	16,4V
				100%	120A	14,8V
SPRINTER® 160S		1x120V		60%	110A	14,4V
				100%	100A	14V
SPRINTER® 180S				60%	110A	14,4V
				100%	100A	14V

WELDING CURRENT RANGE			
	Input Voltage	SMAW	GTAW (Lift TIG)
SPRINTER® 160S	1x230V	20A÷160A	10A÷180A
	1x120V	20A÷85A	10A÷110A
SPRINTER® 180S	1x230V	20A÷180A	10A÷200A
	1x120V	20A÷85A	10A÷110A

RECOMMENDED INPUT CABLE AND FUSE SIZES		
	Fuse Type DZ/Gf or Circuit Breaker D	Power Lead with plug
SPRINTER® 160S	16A, D16A*, D20A***	3 Conductor, 2,5mm^2 3 - pin, 16A/250V
SPRINTER® 180S		
	Maximum recommended extension cord length	Minimum recommended extension cord size
SPRINTER® 160S	100m**	4mm^2
SPRINTER® 180S		

WELDING VOLTAGE REGULATION RANGE			
	Input Voltage	SMAW	GTAW (Lift TIG)
SPRINTER® 160S	1x230V	20,8V÷26,4V	10,4V÷17,2V
	1x120V	20,8V÷23,1V	10,4V÷14,4VA
SPRINTER® 180S	1x230V	20,8V÷27,2V	10,4V÷18V
	1x120V	20,8V÷23,1V	10,4V÷14,4V

DIMENSION				
	Weight	Height	Width	Length
SPRINTER® 160S	8,4kg	305mm	162mm	438mm
SPRINTER® 180S				

OTHERS		
	Protection Rating	Operating Humidity (t=20°C)
SPRINTER® 160S	IP23S	≤ 90 %
SPRINTER® 180S		
	Operating Temperature	Storage Temperature
SPRINTER® 160S	from -10°C to +40°C	from -25°C to 55°C
SPRINTER® 180S		

*For D16A max duty cycle is 15% for 180A in SMAW (MMA).
**Recommended fuse D20A or D25A - for extension cord.
***We declare that the device achieves full operating parameters for a 16A type DZ/Gf fuse type.
In the case of connecting the device to a network with a B16A fuse, the fuse may blow up if welding current in SMAW (MMA) depending on many factors (electrode type, distance of the device from the fuse board, impedance of the supply network, welder skills). The recommended fuse in the network in such cases is D20A (as for extension cord).

ECO design information

03/25

The equipment has been designed in order to be compliant with the Directive 2009/125/EC and the Regulation 2019/1784/EU.

Efficiency and idle power consumption:

Index	Name	Efficiency when max power consumption / Idle power consumption	Equivalent model
K14436-1	**SPRINTER® 160S**	81% / N/A	No equivalent model
K14437-1	**SPRINTER® 180S**	82% / N/A	No equivalent model

Idle state occurs under the condition specified in below table

IDLE STATE	
Condition	**Presence**
MIG mode	N/A
TIG mode	N/A
STICK mode	N/A
After 30 minutes of non-working	N/A
Fan off	N/A

The value of efficiency and consumption in idle state have been measured by method and conditions defined in the product standard EN 60974-1:2022.

Manufacturer's name, product name, code number, product number, serial number and date of production can be read from rating plate.

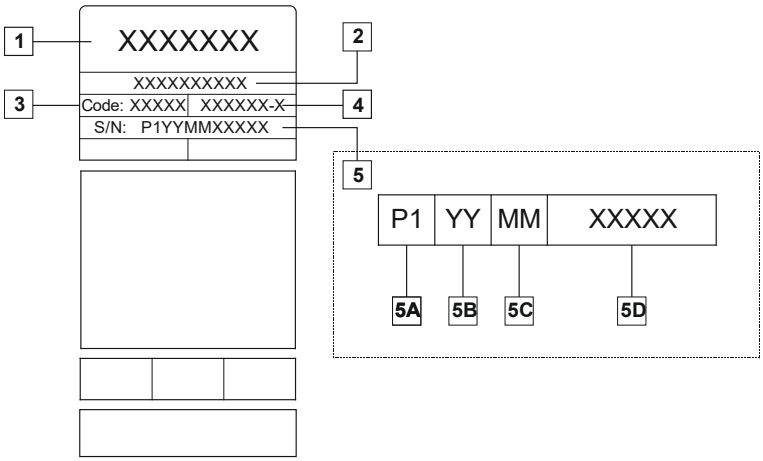

Where:

- **1-** Manufacturer name and address
- **2-** Product name
- **3-** Code number
- **4-** Product number
- **5-** Serial number
  - **5A-** country of production
  - **5B-** year of production
  - **5C-** month of production
  - **5D-** progressive number different for each machine

Tig Process:

In TIG welding process, gas usage depends on cross-sectional area of the nozzle. For commonly used torches:

Helium: 14-24 l/min
Argon: 7-16 l/min

Notice: Excessive flow rates causes turbulence in the gas stream which may aspirate atmospheric contamination into the welding pool.

Notice: A cross wind or draft moving can disrupt the shielding gas coverage, in the interest of saving of protective gas use screen to block air flow.



End of life

At end of life of product, it has to be disposal for recycling in accordance with Directive 2012/19/EU (WEEE), information about the dismantling of product and Critical Raw Material (CRM) present in the product, can be found at https://www.lincolnelectric.com/en-GB/Safety-Document-Search/Critical-Raw-Materials

Electromagnetic Compatibility (EMC)

11/04

This machine has been designed in accordance with all relevant directives and standards. However, it may still generate electromagnetic disturbances that can affect other systems like telecommunications (telephone, radio, and television) or other safety systems. These disturbances can cause safety problems in the affected systems. Read and understand this section to eliminate or reduce the amount of electromagnetic disturbance generated by this machine.

This machine has been designed to operate in an industrial area. To operate in a domestic area it is necessary to observe particular precautions to eliminate possible electromagnetic disturbances. The operator must install and operate this equipment as described in this manual. If any electromagnetic disturbances are detected the operator must put in place corrective actions to eliminate these disturbances, if necessary with assistance from Lincoln Electric.

WARNING

This equipment complies with IEC 61000-3-12.

Before installing the machine, the operator must check the work area for any devices that may malfunction because of electromagnetic disturbances. Consider the following.

- Input and output cables, control cables, and telephone cables that are in or adjacent to the work area and the machine.
- Radio and/or television transmitters and receivers. Computers or computer controlled equipment.
- Safety and control equipment for industrial processes. Equipment for calibration and measurement.
- Personal medical devices like pacemakers and hearing aids.
- Check the electromagnetic immunity for equipment operating in or near the work area. The operator must be sure that all equipment in the area is compatible. This may require additional protection measures.
- The dimensions of the work area to consider will depend on the construction of the area and other activities that are taking place.

Consider the following guidelines to reduce electromagnetic emissions from the machine.

- Connect the machine to the input supply according to this manual. If disturbances occur if may be necessary to take additional precautions such as filtering the input supply.
- The output cables should be as short as possible and positioned together as close as possible to each other. If possible connect the work piece to ground in order to reduce the electromagnetic emissions. The operator must check that connecting the work piece to ground does not cause problems or unsafe operating conditions for personnel and equipment.
- Shielding of cables in the work area can reduce electromagnetic emissions. This may be necessary for special applications.

WARNING

EMC classification of this product is class A in accordance with electromagnetic compatibility standard EN 60974-10 which means that the product is designed to be used in an industrial environment only.

WARNING

The Class A equipment is not intended for use in residential locations where the electrical power is provided by the public low-voltage supply system. There may be potential difficulties in ensuring electromagnetic compatibility in those locations, due to conducted as well as radiated disturbances.



Safety

11/04

WARNING

This equipment must be used by qualified personnel. Be sure that all installation, operation, maintenance and repair procedures are performed only by qualified person. Read and understand this manual before operating this equipment. Failure to follow the instructions in this manual could cause serious personal injury, loss of life, or damage to this equipment. Read and understand the following explanations of the warning symbols. Lincoln Electric is not responsible for damages caused by improper installation, improper care or abnormal operation.

	WARNING: This symbol indicates that instructions must be followed to avoid serious personal injury, loss of life, or damage to this equipment. Protect yourself and others from possible serious injury or death.
	WEAR CORRECT EYE, EAR &BODY PROTECTION: Protect your eyes and face with welding helmet properly fitted and with proper grade of filter plate. Protect your body from welding spatter and arc flash with protective clothing including woolen clothing, flame-proof apron and gloves, leather leggings, and high boots. Protect others from splatter, flash, and glare with protective screens or barriers. In some areas, protection from noise may be appropriate. Be sure protective equipment is in good condition. Also, wear safety glasses in work area at all times.
	READ AND UNDERSTAND INSTRUCTIONS: Read and understand this manual before operating this equipment. Arc welding can be hazardous. Failure to follow the instructions in this manual could cause serious personal injury, loss of life, or damage to this equipment.
	ELECTRIC SHOCK CAN KILL: Welding equipment generates high voltages. Do not touch the electrode, work clamp, or connected work pieces when this equipment is on. Insulate yourself from the electrode, work clamp and connected work pieces.
	ELECTRICALLY POWERED EQUIPMENT: Turn off input power using the disconnect switch at the fuse box before working on this equipment. Ground this equipment in accordance with local electrical regulations.
	ELECTRICALLY POWERED EQUIPMENT: Regularly inspect the input, electrode, and work clamp cables. If any insulation damage exists replace the cable immediately. Do not place the electrode holder directly on the welding table or any other surface in contact with the work clamp to avoid the risk of accidental arc ignition.
	ELECTRIC AND MAGNETIC FIELDS MAY BE DANGEROUS: Electric current flowing through any conductor creates electric and magnetic fields (EMF). EMF fields may interfere with some pacemakers and welders having a pacemaker shall consult their physician before operating this equipment. Exposure to EMF may have other health effects which are unknown. Welders should use the following procedures to minimize exposure to EMF: route the electrode and work cables together on the same side of your body, secure them with tape when possible, do not place your body between the torch and work cables, never coil the torch or work cable around your body, keep welding power source and cables as far away from your body as possible, connect the work cable to the workpiece as close as possible to the area being welded.
	CE COMPLIANCE: This equipment complies with the European Community Directives.
	ARTIFICIAL OPTICAL RADIATION: According with the requirements in 2006/25/EC Directive and EN 12198 Standard, the equipment is a category 2. It makes mandatory the adoption of Personal Protective Equipment (PPE) having filter with a protection degree up to a maximum of 15, as required by EN169 Standard.

	FUMES AND GASES CAN BE DANGEROUS: Welding may produce fumes and gases hazardous to health. Avoid breathing these fumes and gases. To avoid these dangers the operator must use enough ventilation or exhaust to keep fumes and gases away from the breathing zone.
	ARC RAYS CAN BURN: Use a shield with the proper filter and cover plates to protect your eyes from sparks and the rays of the arc when welding or observing. Use suitable clothing made from durable flame-resistant material to protect you skin and that of your helpers. Protect other nearby personnel with suitable, non-flammable screening and warn them not to watch the arc nor expose themselves to the arc.
	WELDING SPARKS CAN CAUSE FIRE OR EXPLOSION: Remove fire hazards from the welding area and have a fire extinguisher readily available. Welding sparks and hot materials from the welding process can easily go through small cracks and openings to adjacent areas. Do not weld on any tanks, drums, containers, or material until the proper steps have been taken to insure that no flammable or toxic vapors will be present. Never operate this equipment when flammable gases, vapors or liquid combustibles are present.
	WELDED MATERIALS CAN BURN: Welding generates a large amount of heat. Hot surfaces and materials in work area can cause serious burns. Use gloves and pliers when touching or moving materials in the work area.
	CYLINDER MAY EXPLODE IF DAMAGED: Use only compressed gas cylinders containing the correct shielding gas for the process used and properly operating regulators designed for the gas and pressure used. Always keep cylinders in an upright position securely chained to a fixed support. Do not move or transport gas cylinders with the protection cap removed. Do not allow the electrode, electrode holder, work clamp or any other electrically live part to touch a gas cylinder. Gas cylinders must be located away from areas where they may be subjected to physical damage or the welding process including sparks and heat sources.
	SAFETY MARK: This equipment is suitable for supplying power for welding operations carried out in an environment with increased hazard of electric shock.

The manufacturer reserves the right to make changes and/or improvements in design without upgrade at the same time the operator's manual.

Introduction

The welding machines **SPRINTER® 160S** / **SPRINTER® 180S** enables welding:
- SMAW (MMA),
- GTAW (Lift TIG).

The complete package contains:
- Manual Instruction (USB),
- Transport strap.

Recommended equipment, which can be bought by user, was mentioned in the chapter "Accessories".

Installation and Operator Instructions

Read this entire section before installation or operation of the machine.

Location and Environment

This machine can operate in harsh environments. However, it is important that simple preventative measures are followed to assure long life and reliable operation:
- Do not place or operate this machine on a surface with an incline greater than 15° from horizontal.
- Do not use this machine for pipe thawing.
- This machine must be located where there is free circulation of clean air without restrictions for air movement to and from the air vents. Do not cover the machine with paper, cloth or rags when switched on.
- Dirt and dust that can be drawn into the machine should be kept to a minimum.
- This machine has a protection rating of IP23S. Keep it dry when possible and do not place it on wet ground or in puddles.
- Do not use in rain or snow.
- Locate the machine away from radio controlled machinery. Normal operation may adversely affect the operation of nearby radio controlled machinery, which may result in injury or equipment damage. Read the section on electromagnetic compatibility in this manual.
- Do not operate in areas with an ambient temperature greater than 40°C.

Duty cycle and Overheating

The duty cycle of a welding machine is the percentage of time in a 10 minute cycle at which the welder can operate the machine at rated welding current.

Example: 60% duty cycle

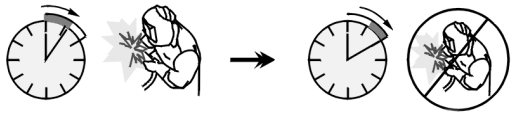

Welding for 6 minutes. Break for 4 minutes.

Excessive extension of the duty cycle will cause the thermal protection circuit to activate.

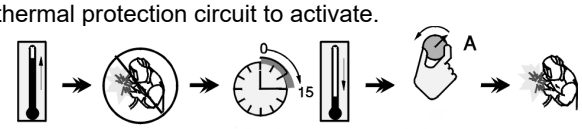

Minutes or decrease Duty Cycle

Input Supply Connection

⚠ WARNING

Only a qualified electrician can connect the welding machine to the supply network. Installation had to be made in accordance with the appropriate National Electrical Code and local regulations.

Check the input voltage, phase and frequency supplied to this machine before turning it on. Verify the connection of ground wires from the machine to the input source. The welding machine **SPRINTER® 160S / SPRINTER® 180S**, must be connected to a correctly installed plug-in socket with an earth pin.
Input voltage is 120 V / 230 Vac 50/60 Hz. For more information about input supply refer to the technical specification section of this manual and to the rating plate of the machine.

Make sure that the amount of mains power available from the input supply is adequate for normal operation of the machine. The necessary delayed fuse or circuit breaker and cable sizes are indicated in the technical specification section of this manual.

⚠ WARNING

The welding machine can be powered by a generator with a recommended power of 10 kVA.

⚠ WARNING

When powering the machine from a generator be sure to turn off welder first, before generator is shut down, in order to prevent damage to welder!

Output Connections

Refer to points [2] and [3] of the Figures below.

Controls and Operational Features

1. User Interface: See “User Interface” chapter.
2. Positive Output Socket for the Welding Circuit: For connecting an electrode holder with lead / work lead depending on the require configuration.
3. Negative Output Socket for the Welding Circuit: For connecting an electrode holder with lead / work lead depending on the require configuration.
4. Power Switch ON/OFF (I/O): Controls the input power to the machine. Be sure the power source is connected to the mains supply before turning power on.
5. Remote Control Connector Plug: To install Remote Control Kit. This connector allows connection Remote Control. See "Accessories" chapter.
6. Main Input Cord (3 m).

WARNING

When the machine is switched again on, last welding process will be recalled.

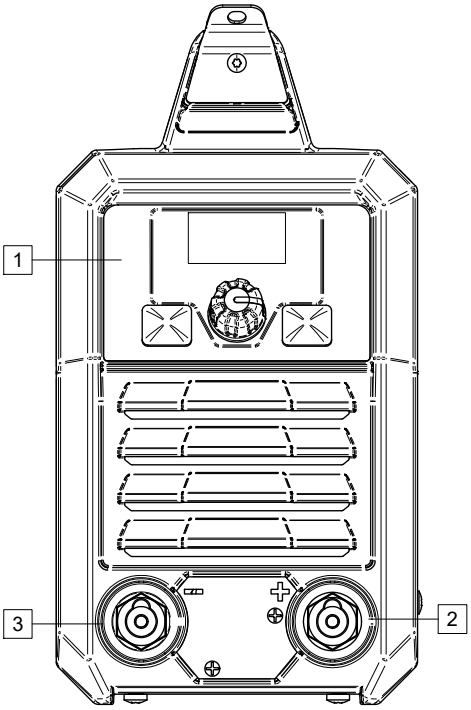

Figure 1

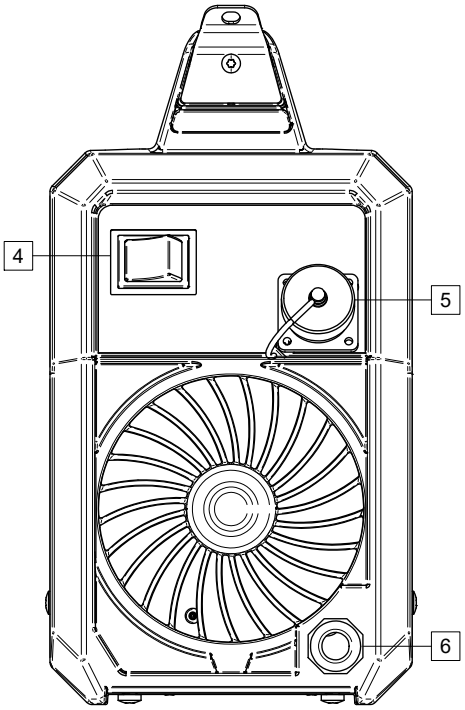

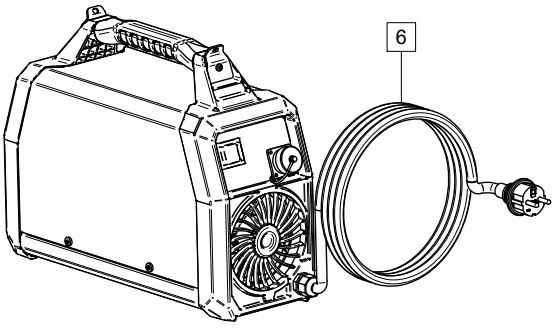

Figure 2

User Interface

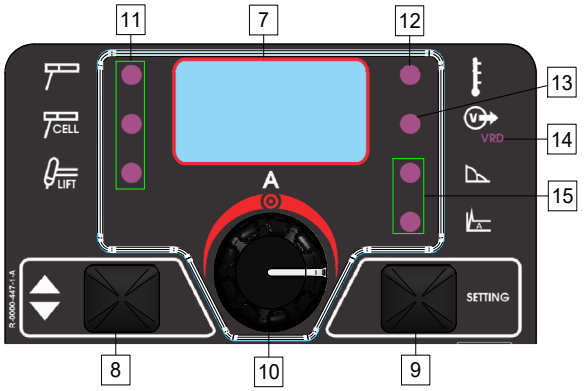

Figure 3

7. Display: shows welding processes parameters.

8. Left button: Enables selecting the welding process.

9. Right button: Enables selecting the welding process parameters

10. Central Knob Button: Enables to adjust the value shown on the display and confirm/validate your selection.

11. Welding Process Indicators: LED indicates the process is active.

Symbol	Process
	Process SMAW (MMA)
CELL	Process SMAW (MMA) cellulose
LIFT	GTAW (Lift TIG)

12. Thermal Overload Indicator: It indicates that the machine is overloaded or that the cooling is not sufficient.

13. Power ON LED: a lit LED indicates that the machine is ready to operate.

14. VRD LED

This machine is provided by VRD (Voltage Reduction Device) function: this reduces the voltage at the output leads.

To enable function VRD, hold the left button for 5 seconds.

The VRD LED is ON when the Output Voltage is below 14 V with the Machine at idle (no welding time).

15. Welding process parameter indicator: LED indicates the active process parameter:

Proces SMAW		ARC FORCE: The output current is temporarily increased to clear short circuit connections between the electrode and the work piece. Lower values will provided less short circuit current and a softer arc. Higher settings will provided a higher short circuit current, more forceful arc and possibly more spatter. • Factory default: OFF • Regulation range: from 0.0 to +10.0.
	A	HOT START: temporarily increases the nominal current value during arc start with electrode to make the arc start easier. • Factory default: OFF • Regulation range: from 0.0 to +10.0.

Welding SMAW (MMA) Process

SPRINTER® 160S / **SPRINTER® 180S** include the electrode holder with lead necessary for SMAW welding.

Procedure of begin welding of SMAW process:

- First turn the machine off.
- Determine the electrode polarity for the electrode to be used. Consult the electrode data for this information.
- Depending on the polarity of using electrode, connect the work lead and the electrode holder with lead to output socket and lock them. See the Table 1.

Table 1

			OUTPUT SOCKET	
POLARITY	DC (+)	The electrode holder with lead to SMAW	[2]	+
		Work lead	[3]	−
	DC (-)	The electrode holder with lead to SMAW	[3]	−
		Work lead	[2]	+

- Connect the work lead to the welding piece with the work clamp.
- Install the proper electrode in the electrode holder.
- Turn the welding machine on.
- Set the welding parameters.
- The welding machine is now ready to weld.
- By applying the principle of occupational health and safety at welding, welding can be begun.

User can set functions:

- The welding current
- Arc dynamics ARC FORCE
- HOT START.

Welding GTAW Process (Lift TIG)

SPRINTER® 160S / **SPRINTER® 180S** can be used to GTAW process with DC (-). Arc ignition can be achieved only by lift TIG method (contact ignition and lift ignition).

SPRINTER® 160S / **SPRINTER® 180S** does not include the torch to GTAW welding, but the one can be purchased separately. See "Accessories" chapter.

Procedure of begin welding of GTAW process:

- First turn the machine off.
- Connect GTAW torch to [3] output socket.
- Connect the work lead to [2] output socket.
- Connect the work lead to the welding piece with the work clamp.
- Install the proper tungsten electrode in the GTAW torch.
- Turn the machine on.
- Set up welding mode to GTAW [11]
- Set the welding parameters.
- The welding machine is now ready to weld.
- By applying the principle of occupational health and safety at welding, welding can be begun.

Transport and Lifting



WARNING

Falling equipment can cause injury and damage to unit.

Only use the handle to move the device. Do not pull on the welding or power cable.

WARNING

Do not use handle to move the machine during operation.

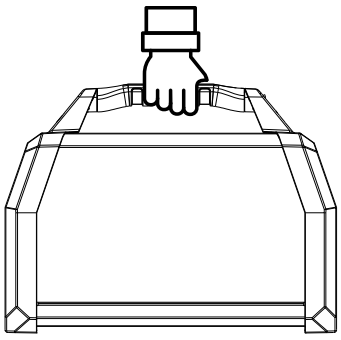

Figure 4

Maintenance

WARNING

For any repair operations, modifications or maintenances, it is recommended to contact the nearest Technical Service Center or Lincoln Electric. Repairs and modifications performed by unauthorized service or personnel will cause, that the manufacturer's warranty will become null and void.

Any noticeable damage should be reported immediately and repaired.

Routine maintenance (everyday)

- Check condition of insulation and connections of the work leads and insulation of power lead. If any insulation damage exists replace the lead immediately.
- Remove the spatters from the welding gun nozzle. Spatters could interfere with the shielding gas flow to the arc.
- Check the welding gun condition: replace it, if necessary.
- Check condition and operation of the cooling fan. Keep clean its airflow slots.

Periodic maintenance (every 200 working hours but at list once every year)

Perform the routine maintenance and, in addition:

- Keep the machine clean. Using a dry (and low pressure) airflow, remove the dust from the external case and from the cabinet inside.
- If it is required, clean and tighten all weld terminals.

The frequency of the maintenance operations may vary in accordance with the working environment where the machine is placed.

WARNING

Do not touch electrically live parts.

WARNING

Before the case of welding machine will be removed, the welding machine had to be turned off and the power lead had to be disconnected from mains socket.

WARNING

Mains supply network must be disconnected from the machine before each maintenance and service. After each repair, perform proper tests to ensure safety.

Customer Assistance Policy

The business of The Lincoln Electric Company is manufacturing and selling high quality welding equipment, consumables, and cutting equipment. Our challenge is to meet the needs of our customers and to exceed their expectations. On occasion, purchasers may ask Lincoln Electric for advice or information about their use of our products. We respond to our customers based on the best information in our possession at that time. Lincoln Electric is not in a position to warrant or guarantee such advice, and assumes no liability, with respect to such information or advice. We expressly disclaim any warranty of any kind, including any warranty of fitness for any customer's particular purpose, with respect to such information or advice. As a matter of practical consideration, we also cannot assume any responsibility for updating or correcting any such information or advice once it has been given, nor does the provision of information or advice create, expand or alter any warranty with respect to the sale of our products.

Lincoln Electric is a responsive manufacturer, but the selection and use of specific products sold by Lincoln Electric is solely within the control of, and remains the sole responsibility of the customer. Many variables beyond the control of Lincoln Electric affect the results obtained in applying these types of fabrication methods and service requirements.

Subject to Change – This information is accurate to the best of our knowledge at the time of printing. Please refer to www.lincolnelectric.com for any updated information.

Troubleshooting

No	Problem	Possible Cause	Recommended Course of Action
1	Machine not working - no output, no fan.	• Make certain that the input power switch is in the “ON” position and machine is plugged in. • Check the input voltage at the machine. Input voltage must match the rating plate and voltage connection. Refer to the Installation section of this manual. • Blown or missing fuses in input line.	Contact your Local **Lincoln Authorized Field Service Facility** for technical troubleshooting assistance.
2	Fan runs - no output from machine in either Stick or TIG modes.	• Check for proper input voltages per nameplate and voltage reconnection. • Check to make sure cables are firmly connected.	
3	Fan runs - no output from machine in either Stick or TIG modes and the yellow light on the control panel is on or flashing while welding.	• Welding application may have exceed the recommended duty cycle. Allow the unit to run until the fan cools the unit and the yellow light goes out.	
4	Machine regularly over heats - thermostat opens, yellow light on front panel illuminates or flashes. The fan runs but machine has no output.	• Welding application may exceed recommended duty cycle. Reduce the duty cycle. • Dirt and dust may have clogged the cooling channels inside the machine. Blow out unit with clean, dry low pressure air. • Air intake, brickwork and exhaust louvers may be blocked due to inadequate clearance around machine.	
5	Machine output is intermittently lost.	• Check Amptrol for proper operation and loose connections. • Check for proper input voltage and proper voltage reconnection.	
6	Arc “Flutters” when TIG welding.	• Tungsten electrode may be too large in diameter for the current setting. • Tungsten not prepared properly - should have slight blunt. • Gas shielding may be insufficient. Increase gas flow; reduce tungsten stickout beyond gas cup. • Check for contaminated gas or leaks in the gas line, torch, or connections • If a helium blend is used as a shielding gas, then reduce the percentage of helium.	

7	Black areas along weld bead.	• Clean any oily or organic contamination from the work piece. • Tungsten electrode may be contaminated. Replace or sharpen. • Check for contaminated gas or leaks in the gas line, torch, or connections • Gas shielding may be insufficient. Increase gas flow; reduce tungsten stickout beyond gas cup.	Contact your Local **Lincoln Authorized Field Service Facility** for technical troubleshooting assistance.
8	The end of the tungsten electrode melts away.	• The welding current is too high for the electrode type and/or size. • Check Polarity	
9	Stick electrode “Blasts Off” when arc is struck.	• Weld current may be set too high for electrode size. Reduce current control setting, or use a larger diameter electrode.	
10	Stick electrode “sticks” in the weld puddle.	• The weld current may be set too low. Increase the current control setting or use a smaller diameter electrode.	

WEEE

07/06

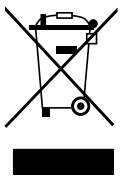

Do not dispose of electrical equipment together with normal waste!
In observance of European Directive 2012/19/EC on Waste Electrical and Electronic Equipment (WEEE) and its implementation in accordance with national law, electrical equipment that has reached the end of its life must be collected separately and returned to an environmentally compatible recycling facility. As the owner of the equipment, you should get information on approved collection systems from our local representative.
By applying this European Directive you will protect the environment and human health!

Spare Parts

12/05

Part list reading instructions

- Do not use this part list for a machine if its code number is not listed. Contact the Lincoln Electric Service Department for any code number not listed.
- Use the illustration of assembly page and the table below to determine where the part is located for your particular code machine.
- Use only the parts marked "X" in the column under the heading number called for in the assembly page (# indicate a change in this printing).

First, read the Part List reading instructions above then refer to the "Spare Part" manual supplied with the machine, which contains a picture-descriptive part number cross-reference).

Authorized Service Shops Location

09/16

- The purchaser must contact a Lincoln Authorized Service Facility (LASF) about any defect claimed under Lincoln's warranty period.
- Contact your local Lincoln Sales Representative for assistance in locating a LASF or go to www.lincolnelectric.com/en-gb/Support/Locator.

Electrical Schematic

Refer to the "Spare Parts" manual supplied with the machine.

Accessories

04/25

OPTIONS & ACCESSORIES	
K10095-1-15M	REMOTE CONTROL, 15 M
K10398	EXTENSION CABLE FOR REMOTE CONTROL BOX, 15 M
W000011139	KIT 35C50
WTT2 TIG TORCHES AIR	
W10529-17-4V	WTT2 17 TIG TORCH WITH GAS VALVE 4M AIR COOLED

Dimension Diagram

