Return to Master TOC
View Safety Info

GENUINE LINCOLN PARTS™

NOTE: This manual will cover most of the troubleshooting and repair procedures for the code numbers listed. Some variances may exist when troubleshooting/repairing later code numbers.

LN-25™ PORTABLE CV/CC SEMIAUTOMATIC WIRE FEEDER

For use with machines having Code Numbers:

9218	**9810**	**10557**
9219	**9811**	**10558**
9220	**9812**	**11144**
9383	**10556**	**11145**

SERVICE MANUAL

SVM114-C | Issue Date 08, Jul
© Lincoln Global, Inc. All Rights Reserved.

THE LINCOLN ELECTRIC COMPANY
22801 St. Clair Avenue • Cleveland, OH • 44117-1199 • U.S.A.
Phone: +1.216.481.8100 • www.lincolnelectric.com

WARNING

CALIFORNIA PROPOSITION 65 WARNINGS

Diesel engine exhaust and some of its constituents are known to the State of California to cause cancer, birth defects, and other reproductive harm.

The Above For Diesel Engines

The engine exhaust from this product contains chemicals known to the State of California to cause cancer, birth defects, or other reproductive harm.

The Above For Gasoline Engines

ARC WELDING can be hazardous. PROTECT YOURSELF AND OTHERS FROM POSSIBLE SERIOUS INJURY OR DEATH. KEEP CHILDREN AWAY. PACEMAKER WEARERS SHOULD CONSULT WITH THEIR DOCTOR BEFORE OPERATING.

Read and understand the following safety highlights. For additional safety information, it is strongly recommended that you purchase a copy of "Safety in Welding & Cutting - ANSI Standard Z49.1" from the American Welding Society, P.O. Box 351040, Miami, Florida 33135 or CSA Standard W117.2-1974. A Free copy of "Arc Welding Safety" booklet E205 is available from the Lincoln Electric Company, 22801 St. Clair Avenue, Cleveland, Ohio 44117-1199.

BE SURE THAT ALL INSTALLATION, OPERATION, MAINTENANCE AND REPAIR PROCEDURES ARE PERFORMED ONLY BY QUALIFIED INDIVIDUALS.

FOR ENGINE powered equipment.

1.a. Turn the engine off before troubleshooting and maintenance work unless the maintenance work requires it to be running.

1.b. Operate engines in open, well-ventilated areas or vent the engine exhaust fumes outdoors.

1.c. Do not add the fuel near an open flame welding arc or when the engine is running. Stop the engine and allow it to cool before refueling to prevent spilled fuel from vaporizing on contact with hot engine parts and igniting. Do not spill fuel when filling tank. If fuel is spilled, wipe it up and do not start engine until fumes have been eliminated.

1.d. Keep all equipment safety guards, covers and devices in position and in good repair.Keep hands, hair, clothing and tools away from V-belts, gears, fans and all other moving parts when starting, operating or repairing equipment.

1.e. In some cases it may be necessary to remove safety guards to perform required maintenance. Remove guards only when necessary and replace them when the maintenance requiring their removal is complete. Always use the greatest care when working near moving parts.

1.f. Do not put your hands near the engine fan. Do not attempt to override the governor or idler by pushing on the throttle control rods while the engine is running.

1.g. To prevent accidentally starting gasoline engines while turning the engine or welding generator during maintenance work, disconnect the spark plug wires, distributor cap or magneto wire as appropriate.

1.h. To avoid scalding, do not remove the radiator pressure cap when the engine is hot.

ELECTRIC AND MAGNETIC FIELDS may be dangerous

2.a. Electric current flowing through any conductor causes localized Electric and Magnetic Fields (EMF). Welding current creates EMF fields around welding cables and welding machines

2.b. EMF fields may interfere with some pacemakers, and welders having a pacemaker should consult their physician before welding.

2.c. Exposure to EMF fields in welding may have other health effects which are now not known.

2.d. All welders should use the following procedures in order to minimize exposure to EMF fields from the welding circuit:

2.d.1. Route the electrode and work cables together - Secure them with tape when possible.

2.d.2. Never coil the electrode lead around your body.

2.d.3. Do not place your body between the electrode and work cables. If the electrode cable is on your right side, the work cable should also be on your right side.

2.d.4. Connect the work cable to the workpiece as close as possible to the area being welded.

2.d.5. Do not work next to welding power source.

Mar '95

Return to Master TOC
Return to Master TOC
Return to Master TOC
Return to Master TOC

Return to Master TOC
Return to Master TOC
Return to Master TOC
Return to Master TOC

ELECTRIC SHOCK can kill.

3.a. The electrode and work (or ground) circuits are electrically "hot" when the welder is on. Do not touch these "hot" parts with your bare skin or wet clothing. Wear dry, hole-free gloves to insulate hands.

3.b. Insulate yourself from work and ground using dry insulation. Make certain the insulation is large enough to cover your full area of physical contact with work and ground.

In addition to the normal safety precautions, if welding must be performed under electrically hazardous conditions (in damp locations or while wearing wet clothing; on metal structures such as floors, gratings or scaffolds; when in cramped positions such as sitting, kneeling or lying, if there is a high risk of unavoidable or accidental contact with the workpiece or ground) use the following equipment:

- **Semiautomatic DC Constant Voltage (Wire) Welder.**
- **DC Manual (Stick) Welder.**
- **AC Welder with Reduced Voltage Control.**

3.c. In semiautomatic or automatic wire welding, the electrode, electrode reel, welding head, nozzle or semiautomatic welding gun are also electrically "hot".

3.d. Always be sure the work cable makes a good electrical connection with the metal being welded. The connection should be as close as possible to the area being welded.

3.e. Ground the work or metal to be welded to a good electrical (earth) ground.

3.f. Maintain the electrode holder, work clamp, welding cable and welding machine in good, safe operating condition. Replace damaged insulation.

3.g. Never dip the electrode in water for cooling.

3.h. Never simultaneously touch electrically "hot" parts of electrode holders connected to two welders because voltage between the two can be the total of the open circuit voltage of both welders.

3.i. When working above floor level, use a safety belt to protect yourself from a fall should you get a shock.

3.j. Also see Items 6.c. and 8.

ARC RAYS can burn.

4.a. Use a shield with the proper filter and cover plates to protect your eyes from sparks and the rays of the arc when welding or observing open arc welding. Headshield and filter lens should conform to ANSI Z87. I standards.

4.b. Use suitable clothing made from durable flame-resistant material to protect your skin and that of your helpers from the arc rays.

4.c. Protect other nearby personnel with suitable, non-flammable screening and/or warn them not to watch the arc nor expose themselves to the arc rays or to hot spatter or metal.

FUMES AND GASES can be dangerous.

5.a. Welding may produce fumes and gases hazardous to health. Avoid breathing these fumes and gases.When welding, keep your head out of the fume. Use enough ventilation and/or exhaust at the arc to keep fumes and gases away from the breathing zone. **When welding with electrodes which require special ventilation such as stainless or hard facing (see instructions on container or MSDS) or on lead or cadmium plated steel and other metals or coatings which produce highly toxic fumes, keep exposure as low as possible and below Threshold Limit Values (TLV) using local exhaust or mechanical ventilation. In confined spaces or in some circumstances, outdoors, a respirator may be required. Additional precautions are also required when welding on galvanized steel.**

5. b. The operation of welding fume control equipment is affected by various factors including proper use and positioning of the equipment, maintenance of the equipment and the specific welding procedure and application involved. Worker exposure level should be checked upon installation and periodically thereafter to be certain it is within applicable OSHA PEL and ACGIH TLV limits.

5.c. Do not weld in locations near chlorinated hydrocarbon vapors coming from degreasing, cleaning or spraying operations. The heat and rays of the arc can react with solvent vapors to form phosgene, a highly toxic gas, and other irritating products.

5.d. Shielding gases used for arc welding can displace air and cause injury or death. Always use enough ventilation, especially in confined areas, to insure breathing air is safe.

5.e. Read and understand the manufacturer's instructions for this equipment and the consumables to be used, including the material safety data sheet (MSDS) and follow your employer's safety practices. MSDS forms are available from your welding distributor or from the manufacturer.

5.f. Also see item 1.b.

Return to Master TOC
Return to Master TOC
Return to Master TOC
Return to Master TOC

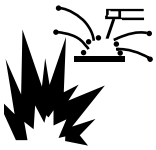

WELDING and CUTTING SPARKS can cause fire or explosion.

6.a. Remove fire hazards from the welding area. If this is not possible, cover them to prevent the welding sparks from starting a fire. Remember that welding sparks and hot materials from welding can easily go through small cracks and openings to adjacent areas. Avoid welding near hydraulic lines. Have a fire extinguisher readily available.

6.b. Where compressed gases are to be used at the job site, special precautions should be used to prevent hazardous situations. Refer to “Safety in Welding and Cutting” (ANSI Standard Z49.1) and the operating information for the equipment being used.

6.c. When not welding, make certain no part of the electrode circuit is touching the work or ground. Accidental contact can cause overheating and create a fire hazard.

6.d. Do not heat, cut or weld tanks, drums or containers until the proper steps have been taken to insure that such procedures will not cause flammable or toxic vapors from substances inside. They can cause an explosion even though they have been “cleaned”. For information, purchase “Recommended Safe Practices for the Preparation for Welding and Cutting of Containers and Piping That Have Held Hazardous Substances”, AWS F4.1 from the American Welding Society (see address above).

6.e. Vent hollow castings or containers before heating, cutting or welding. They may explode.

6.f. Sparks and spatter are thrown from the welding arc. Wear oil free protective garments such as leather gloves, heavy shirt, cuffless trousers, high shoes and a cap over your hair. Wear ear plugs when welding out of position or in confined places. Always wear safety glasses with side shields when in a welding area.

6.g. Connect the work cable to the work as close to the welding area as practical. Work cables connected to the building framework or other locations away from the welding area increase the possibility of the welding current passing through lifting chains, crane cables or other alternate circuits. This can create fire hazards or overheat lifting chains or cables until they fail.

6.h. Also see item 1.c.

6.I. Read and follow NFPA 51B “ Standard for Fire Prevention During Welding, Cutting and Other Hot Work”, available from NFPA, 1 Batterymarch Park,PO box 9101, Quincy, Ma 022690-9101.

6.j. Do not use a welding power source for pipe thawing.

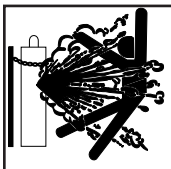

CYLINDER may explode if damaged.

7.a. Use only compressed gas cylinders containing the correct shielding gas for the process used and properly operating regulators designed for the gas and pressure used. All hoses, fittings, etc. should be suitable for the application and maintained in good condition.

7.b. Always keep cylinders in an upright position securely chained to an undercarriage or fixed support.

7.c. Cylinders should be located:

- Away from areas where they may be struck or subjected to physical damage.
- A safe distance from arc welding or cutting operations and any other source of heat, sparks, or flame.

7.d. Never allow the electrode, electrode holder or any other electrically “hot” parts to touch a cylinder.

7.e. Keep your head and face away from the cylinder valve outlet when opening the cylinder valve.

7.f. Valve protection caps should always be in place and hand tight except when the cylinder is in use or connected for use.

7.g. Read and follow the instructions on compressed gas cylinders, associated equipment, and CGA publication P-I, “Precautions for Safe Handling of Compressed Gases in Cylinders,” available from the Compressed Gas Association 1235 Jefferson Davis Highway, Arlington, VA 22202.

FOR ELECTRICALLY powered equipment.

8.a. Turn off input power using the disconnect switch at the fuse box before working on the equipment.

8.b. Install equipment in accordance with the U.S. National Electrical Code, all local codes and the manufacturer’s recommendations.

8.c. Ground the equipment in accordance with the U.S. National Electrical Code and the manufacturer’s recommendations.

Return to Master TOC
Return to Master TOC
Return to Master TOC
Return to Master TOC

PRÉCAUTIONS DE SÛRETÉ

Pour votre propre protection lire et observer toutes les instructions et les précautions de sûreté specifiques qui parraissent dans ce manuel aussi bien que les précautions de sûreté générales suivantes:

Sûreté Pour Soudage A L'Arc

1. Protegez-vous contre la secousse électrique:

   a. Les circuits à l'électrode et à la piéce sont sous tension quand la machine à souder est en marche. Eviter toujours tout contact entre les parties sous tension et la peau nue ou les vétements mouillés. Porter des gants secs et sans trous pour isoler les mains.
   b. Faire trés attention de bien s'isoler de la masse quand on soude dans des endroits humides, ou sur un plancher metallique ou des grilles metalliques, principalement dans les positions assis ou couché pour lesquelles une grande partie du corps peut être en contact avec la masse.
   c. Maintenir le porte-électrode, la pince de masse, le câble de soudage et la machine à souder en bon et sûr état defonctionnement.
   d. Ne jamais plonger le porte-électrode dans l'eau pour le refroidir.
   e. Ne jamais toucher simultanément les parties sous tension des porte-électrodes connectés à deux machines à souder parce que la tension entre les deux pinces peut être le total de la tension à vide des deux machines.
   f. Si on utilise la machine à souder comme une source de courant pour soudage semi-automatique, ces precautions pour le porte-électrode s'applicuent aussi au pistolet de soudage.

2. Dans le cas de travail au dessus du niveau du sol, se protéger contre les chutes dans le cas ou on recoit un choc. Ne jamais enrouler le câble-électrode autour de n'importe quelle partie du corps.

3. Un coup d'arc peut être plus sévère qu'un coup de soliel, donc:

   a. Utiliser un bon masque avec un verre filtrant approprié ainsi qu'un verre blanc afin de se protéger les yeux du rayonnement de l'arc et des projections quand on soude ou quand on regarde l'arc.
   b. Porter des vêtements convenables afin de protéger la peau de soudeur et des aides contre le rayonnement de l'arc.
   c. Protéger l'autre personnel travaillant à proximité au soudage à l'aide d'écrans appropriés et non-inflammables.

4. Des gouttes de laitier en fusion sont émises de l'arc de soudage. Se protéger avec des vêtements de protection libres de l'huile, tels que les gants en cuir, chemise épaisse, pantalons sans revers, et chaussures montantes.

5. Toujours porter des lunettes de sécurité dans la zone de soudage. Utiliser des lunettes avec écrans lateraux dans les zones où l'on pique le laitier.

6. Eloigner les matériaux inflammables ou les recouvrir afin de prévenir tout risque d'incendie dû aux étincelles.

7. Quand on ne soude pas, poser la pince à une endroit isolé de la masse. Un court-circuit accidental peut provoquer un échauffement et un risque d'incendie.

8. S'assurer que la masse est connectée le plus prés possible de la zone de travail qu'il est pratique de le faire. Si on place la masse sur la charpente de la construction ou d'autres endroits éloignés de la zone de travail, on augmente le risque de voir passer le courant de soudage par les chaines de levage, câbles de grue, ou autres circuits. Cela peut provoquer des risques d'incendie ou d'echauffement des chaines et des câbles jusqu'à ce qu'ils se rompent.

9. Assurer une ventilation suffisante dans la zone de soudage. Ceci est particuliérement important pour le soudage de tôles galvanisées plombées, ou cadmiées ou tout autre métal qui produit des fumeés toxiques.

10. Ne pas souder en présence de vapeurs de chlore provenant d'opérations de dégraissage, nettoyage ou pistolage. La chaleur ou les rayons de l'arc peuvent réagir avec les vapeurs du solvant pour produire du phosgéne (gas fortement toxique) ou autres produits irritants.

11. Pour obtenir de plus amples renseignements sur la sûreté, voir le code "Code for safety in welding and cutting" CSA Standard W 117.2-1974.

PRÉCAUTIONS DE SÛRETÉ POUR LES MACHINES À SOUDER À TRANSFORMATEUR ET À REDRESSEUR

1. Relier à la terre le chassis du poste conformement au code de l'électricité et aux recommendations du fabricant. Le dispositif de montage ou la piece à souder doit être branché à une bonne mise à la terre.

2. Autant que possible, l'installation et l'entretien du poste seront effectués par un électricien qualifié.

3. Avant de faires des travaux à l'interieur de poste, la debrancher à l'interrupteur à la boite de fusibles.

4. Garder tous les couvercles et dispositifs de sûreté à leur place.

Mar '93

MASTER TABLE OF CONTENTS FOR ALL SECTIONS

	Page
Safety	i-iv
Installation	Section A
Operation	Section B
Accessories	Section C
Maintenance	Section D
Theory of Operation	Section E
Troubleshooting and Repair	Section F
Electrical Diagrams	Section G
Parts Manual (below code 10500)	P-175
Parts Manual (above code 10500)	P-333

TABLE OF CONTENTS
- INSTALLATION SECTION -

Installation . . . . . **Section A**
Technical Specifications A-2
Safety Precautions A-3
Power Source Connection A-3
DC-250™ A-3
DC-400™ and CV-400™ A-3
DC-600™ A-4
SAM-400™, -650™ A-4
SA-200™, -250™ or SAE-300™, -400™ A-4
Invertec, CV300™ and other newer Lincoln Power Sources A-4
Gun Cable Connection to Feeder A-4
Weld Cable Connection A-5
Electrode Cable Connections A-5
Work Cable Connection A-5
Wire Feed Drive Roll and Guide Tube Kits A-5

Return to Master TOC
Return to Master TOC
Return to Master TOC
Return to Master TOC

Return to Section TOC
Return to Master TOC

TECHNICAL SPECIFICATIONS – LN-25™

VOLTAGE	
Constant Voltage (CV) or Constant Current (CC)	15-40 VDC (110VDC Maximum OCV)

RATED CURRENT	
Rated current without contactor	500 Amps 60% Duty Cycle
Rated current with contactor	300 Amps 60% Duty Cycle

WIRE FEED SPEED
50 – 700 Inches Per Minute (IPM)

WIRE DIAMETERS	
.023" to 1/16" .045" to 5/64" .035" to 1/16"	SOLID STEEL WIRE CORED WIRE ALUMINUM WIRE

PHYSICAL DIMENSIONS			
HEIGHT (Handle Down)	WIDTH	DEPTH	WEIGHT w/o Options
14 Inches (354 mm)	7.4 Inches (187 mm)	21 Inches (531 mm)	28 lbs (13 kg)

TEMPERATURE RANGE	
OPERATION:	- 40° C to +40° C (- 40° F to +104° F)
STORAGE:	- 40° C to +70° C (- 40° F to +158° F)

ENVIRONMENTAL RATING
IP23 (IEC529)

Return to Section TOC
Return to Master TOC

SAFETY PRECAUTIONS

⚠ WARNING

Unless an optional output control or contactor is used with the LN-25™, the electrode circuit (including welding wire, wire drive and welding gun) is electrically hot when the welding power source is on. The gun trigger controls wire feed only.

Disconnect or shut off welding power source before making connections or installations to the LN-25™.

Welding gun should be stored in the insulated gun holder, located near the rear on the top of the LN-25™ case, to avoid accidental arcing. The LN-25™ should be positioned upright on a horizontal surface.

⚠ WARNING

ELECTRIC SHOCK can kill.

- Do not touch metal portions of the LN-25™ lead clip when welding power source is on.

POWER SOURCE CONNECTION

The LN-25™ can be used with any DC welding power source. A constant voltage power source is recommended; however, the LN-25™ can also be used with a constant current power source as long as the open circuit voltage is less than 110V DC.

⚠ CAUTION

Do not use LN-25™ models below Code 9200 with any TIG or Square Wave welding power sources. Do not use LN-25™ models equipped with internal contactors with non- Lincoln TIG or Square Wave welding power sources. Damage to the LN-25™ circuit can occur as a result of the high output inductance typically associated with these power sources. TIG high frequency power should never be applied to the LN-25™.

If not using an LN-25™ Remote Output Control option (See Remote Output Control Options and Cable Assemblies Section), the power source output must be electrically "hot" at all times when the power source is turned on.

See the power source instruction manual for proper power source connections and setting required.

⚠ WARNING

ELECTRIC SHOCK can kill.

- Do not operate with covers removed.
- Turn off power source before installing or servicing.
- Do not touch electrically hot parts.
- Turn the input power to the welding power source off at the fuse box before working in the terminal strip.
- Only qualified personnel should install, use or service this equipment.

DC-250™

a. Connect a jumper from 2 to 4 on the power source terminal strip so the output will be energized when the DC-250™ is turned on.

b. Connect electrode cable to the "Innershield/GMAW" output terminal of polarity required by electrode. Connect work lead to other "Innershield/GMAW" output terminal.

c. Place "Set to CV Electrode Cable Polarity" switch at appropriate position.

d. Place power source toggle switch in "Output Control at DC-250™" position, unless a Remote Control is connected to 75, 76 and 77 on the DC-250™ terminal strip.

e. Place mode switch in "Innershield GMAW (CV)" position. Set CV arc control to "2" (or "NORMAL" on some machines). Initially set the output control on "7".

DC-400™ AND CV-400™

a. Connect a jumper from 2 to 4 on the power source terminal strip so the output will be energized when the power source is turned on.

NOTE: DC-400™ machines above Code 9200 have an output toggle switch to perform this function.

b. Connect the electrode cable to the output terminal of polarity required by electrode. Connect work lead to other output terminal.

Return to Section TOC
Return to Master TOC

c. Place “Set to Same Polarity As Electrode Cable Connection” switch at appropriate position.

d. Place power source toggle switch in “Output Control at DC(CV) -400™” position, unless a remote control is connected to 75, 76 and 77 on the power source terminal strip or to the MS type connector.

e. If power source has a mode switch, set switch to Constant Voltage Innershield. Initially set the output control on “6”.

DC-600™

a. Connect a jumper from 2 to 4 on the power source terminal strip so the output will be energized when the DC-600™ is turned on. (For DC-600™ below Code 8200, also jumper N to S.)

b. Connect the electrode cable to the output terminal of polarity required by electrode. Connect work lead to other output terminal.

c. Place “Set to Same Polarity As Electrode Cable Connection” switch at appropriate position.

d. Place power source toggle switch in “Output Control at DC-600™” position, unless a remote control is connected to 75, 76 and 77 on the DC-600™ terminal strip.

e. Set mode switch to Constant Voltage Innershield. Initially set output control on “4”.

SAM-400™, –650™

a. Connect a jumper from 2 to C4 on the power source terminal strip so the output will be energized when the SAM power source is on.

b. Connect work lead to WORK stud. Connect electrode to AUTO EQUIPMENT stud. Connect SAM-650™ “Tap” lead to the Innershield stud desired.

c. Set ELECTRODE POLARITY switch to constant voltage polarity required by electrode.

d. Set toggle switch to “Constant Voltage” and set the Constant Voltage Control on welder and the portable field control on #5 for initial start.

SA-200™, –250™ OR SAE-300™, –400™ (WITH CV ADAPTER)

a. For electrode negative welding, connect the electrode lead from the LN-25™ to the output terminal on the CV Adapter, and the work lead to the power source output terminal labeled “POSITIVE”. For electrode positive welding, interchange the above lead connections so the LN-25™ electrode lead is then connected to the positive power source terminal.

b. Place both switches on the CV Adapter to the CV INNERSHIELD position and make appropriate power source settings per the CV Adapter instructions provided for the power source being used.

c. The output voltage is set with the voltage control on the CV Adapter.

NOTE: Refer to the Instruction Manual provided with the machine for details on connection and operation of the LN-25™ with the power source.

INVERTEC, CV300™ AND OTHER NEWER LINCOLN POWER SOURCES

Refer to the instruction manual provided with the power source for details on connection and operation of the LN-25™ with these newer machines.

GUN CABLE CONNECTION TO FEEDER

Lay the cable out straight. Insert the connector on the welding conductor cable into the brass conductor block on the front of the wire drive unit. Make sure it is all the way in and tighten the hand wheel clamp. Keep this connection clean and bright. Connect the control cable polarized amphenol plug into the mating 5-cavity receptacle on the front panel of the wire feeder case.

FOR GMA GUN AND CABLES:

Requires installation of K430-1 or K430-2 Gas Solenoid Kit (factory installed on K446 and K449 models).

See K430-1 or K430-2 Gas Solenoid Kit Section (in ***Accessories Section***) for gas solenoid operation and gas supply connection.

Return to Section TOC
Return to Master TOC

Install the barbed fitting and union nut to the 5/8-18 female inert gas fitting on the front panel of the LN-25™ case. Connect the 3/16" I.D. gas hose from the gun cable to the barbed fitting.

When the gun is to be removed, this fitting can be easily detached by loosening the union nut.

WELD CABLE CONNECTION

The size of the electrode cable and work cable must be sufficient for the maximum weld current and total cable length to be used. Refer to table A.1.

TABLE A.1

Weld Current 60% Duty Cycle	Total Cable Length			
	50'-100'	100'-150'	150'-200'	200'-250'
200Amps	2 AWG	2 AWG	1 AWG	1/0
300Amps	1 AWG	1 AWG	1/0	2/0
400Amps	2/0	2/0	3/0	3/0
500Amps	2/0	3/0	3/0	4/0

ELECTRODE CABLE CONNECTION

On units without an internal contactor route the electrode cable through the oval hole in the LN-25™ rear panel, then along the case floor behind the reel support and around the door side of the wire drive. Connect the electrode cable to the LN-25™ using the 1/2" bolt on the front of the wire drive.

On units with an internal contactor connect the electrode cable to the LN-25™ electrode input cable with the nut and bolt provided. Tape the bolted connection.

ELECTRODE CABLE CONNECTION

(FOR LATER CODE NUMBERS ABOVE 10500)

Route the electrode cable through the oval hole in the lower portion of the LN-25™ rear panel. Connect the electrode cable to the LN-25™ input stud using the the 1/2" nut provided.

Secure the cable with the strain relief clamp provided. All units are supplied with an optional pigtail for customers that prefer to make a taped and bolted connection externally.

WORK CABLE CONNECTION

Connect a work lead of sufficient size between the proper output stud on the power source and the work. Be sure the connection to the work makes tight metal-to-metal electrical contact. Poor work lead connections can result in poor welding performance.

WIRE FEED DRIVE ROLL AND GUIDE TUBE KITS

⚠ WARNING

Turn off power source before installing or changing drive roll and/or guide tubes.

NOTE: The maximum wire sizes the LN-25™ will satisfactorily feed are 5/64" cored and 1/16" solid electrodes.

The electrode sizes that can be fed with each roll and guide tube are stencilled[1] on each part. Check the kit for proper components. See the instructions, included with the drive roll kit, to install these parts on new machines or replace them on used machines. Refer to table A.2.

TABLE A.2

	Kit	Instructions
Steel Wire Sizes:		
.068-5/64 Cored	KP653-3/32	L9932
1/16 (.062) Cored or Solid Steel	-1/16	
(Can also be used for .052)		
.045 and .052 Solid Steel	-.052	
.045 and .052 Cored	-.052C	
.035 Solid Steel	-.035S	
.035 Cored	-.035C	
.030 Solid Steel	-.030S	
.025 Solid Steel	-.025S	
Aluminum Wire Sizes:		
1/16	KP654-1/16A	L9932
3/64	-3/64A	
.035	-.035A	

[1]Drive rolls for only **cored** electrode sizes are stencilled with a "C" suffix to the wire sizes.

Drive rolls for only **solid** electrode sizes are stencilled with an "S" suffix to the wire sizes.

Drive rolls for aluminum wire sizes are stencilled with an "A" suffix to the wire sizes.

NOTES

A-6

Return to Section TOC
Return to Master TOC
Return to Section TOC
Return to Master TOC
Return to Section TOC
Return to Master TOC
Return to Section TOC
Return to Master TOC

TABLE OF CONTENTS
- OPERATION SECTION -

Return to Master TOC
Return to Master TOC
Return to Master TOC
Return to Master TOC

Operation . . . . . **Section B**
Safety Precautions B-2
General Description B-2
Recommended Processes and Equipment B-2
Welding Capability B-2
LN-25™ Instruments and Controls B-3
Sequence of Operation B-5
Loading Electrode B-5
Mounting 22 to 30 lb Readi-Reel Coils B-5
Mounting 10 to 30 lb Spools B-5
Mounting 13 or 14 lb Innershield Coils B-5
Loading Wire Drive B-6
Idle Roll Pressure Setting B-6
Presetting Wire Feed Speed B-7
Setting Constant Wire Feed Speed (CV Mode) B-7
Setting Arc Sensing Wire Feed Speed (CC Mode) B-7
Making a Weld B-8
Welding B-9
Procedure at End of Coil B-9
Open Arc Welding with a Constant Current Power Source B-9
Automatic Protection Shutdown B-10
Overvoltage Shutdown B-10
Motor Overload Shutdown B-10

Return to Section TOC
Return to Master TOC

SAFETY PRECAUTIONS

READ AND UNDERSTAND ENTIRE SECTION BEFORE OPERATING MACHINE

⚠ WARNING

ELECTRIC SHOCK can kill.

- Do not touch electrically live part or electrode with skin or wet clothing.
- Insulate yourself from work and ground.
- Always wear dry insulating gloves.

FUMES AND GASSES can be dangerous.

- Keep your head out of fumes.
- Use ventilation or exhaust to remove fumes from breathing zone.

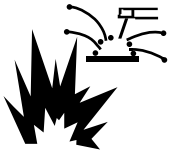

WELDING SPARKS can cause fire or explosion.

- Keep flammable material away.

ARC RAYS can burn.

- Wear eye, ear and body protection.

GENERAL DESCRIPTION

The LN-25™ is a lightweight portable semiautomatic wire feeder designed for “across-the-arc” operation without a control cable on most any DC welding power source. Simply connect the LN-25™ to the electrode cable, clip it to Work and it is ready to weld, using up to 30 lb. coils or spools.

The wire drive, controls and wire reel are fully enclosed in a rugged molded plastic case providing a compact and versatile welding package ideally suited to “on-the-go” field welding applications in virtually any environment.

RECOMMENDED PROCESSES AND EQUIPMENT

When combined with the drive roll kits and accessories available for use with the LN-25™, a versatile portable welding system can be provided to meet the specific needs of Innershield, submerged arc or gas metal arc welding applications within the wire feed capabilities of the LN-25™.

The LN-25™ provides constant wire feed speed for use with constant voltage (CV) power sources, and arc-sensing wire feed speed for use with constant current (CC) (formerly variable voltage) power sources. Wire speed is presettable on a dual-range calibrated dial.

The power sources recommended for use with the LN-25™ include the DC-250™, -400™, -600™, CV-400™ and R3S type transformer machines, and the SAM-400™, -650™ engine welders, as well as the SA-200™, -250™ or SAE-300™, -400™ with CV Adapter and Pulse Power 500™ with K460-1 LN-25™ Kit.

WELDING CAPABILITY

The LN-25™ will handle up to 500 Amp 60% duty cycle welding currents. However, when equipped with a K443-1,-2, or-3 (depending on code number) Contactor, the LN-25™ will handle up to 300 Amp 60% duty cycle.

Return to Section TOC
Return to Master TOC

LN-25™ INSTRUMENTS AND CONTROLS

Refer to Figure B.1 for control locations.

FIGURE B.1 – CONTROL LOCATIONS.

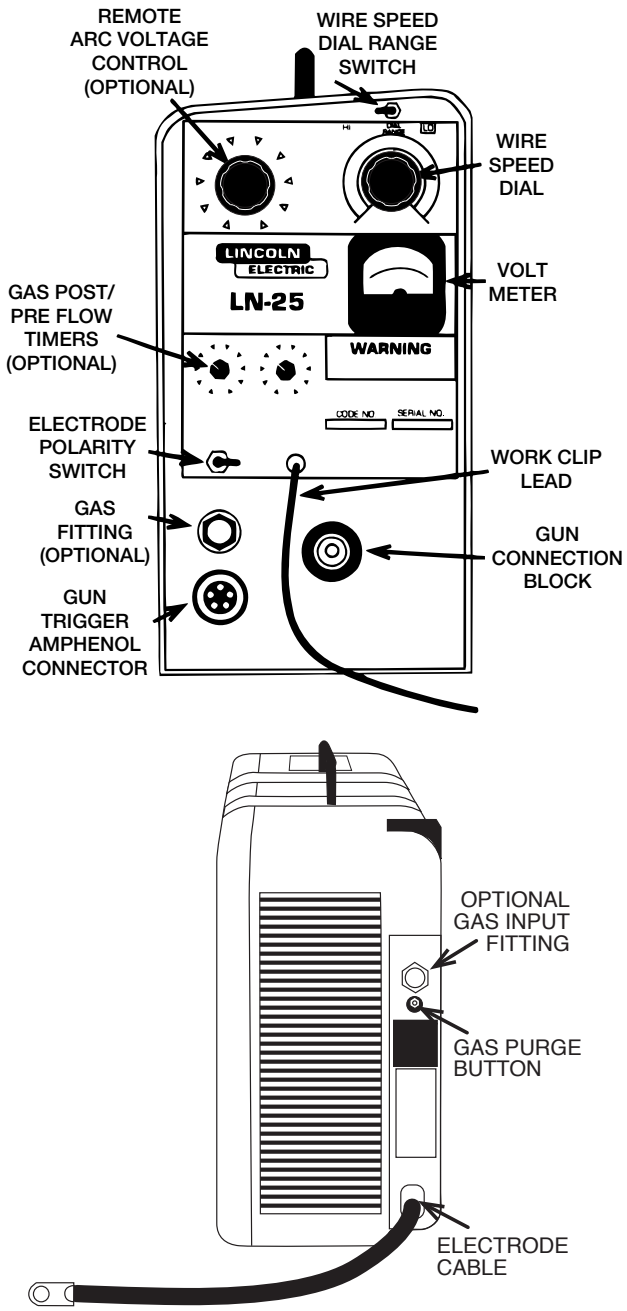

VOLTMETER

(Factory installed on model Codes above 9218)

The 40V DC analog voltmeter is mounted to the front control panel of the LN-25™ and is connected to read the arc voltage between the LN-25™ electrode cable connection and the work clip lead.

NOTE:

1. The Voltmeter will read zero if the LN-25™ work clip lead is not connected to work, even if the electrode is electrically “hot” to work.
2. The Voltmeter will read below zero if the LN-25™ polarity switch is not set to the same polarity as the electrode.
3. The Voltmeter will read power source open circuit voltage when the gun trigger is open, even if the LN-25™ is equipped with the internal contactor.

“ELECTRODE POLARITY” SWITCH

The polarity switch is located on the front panel of the LN-25™ case.

Set the switch to the same polarity as the electrode lead connection to the power source. If the switch is not set for the correct polarity, the wire feeder will not operate.

WIRE FEED MODE SWITCH

The CV-VV (CC) Wire Feed Mode switch is located inside the LN-25™ case. The toggle switch extends from beneath the control box just above the wire drive.

The forward “CV” position provides constant wire feed speed mode for use with constant voltage (CV) welding power sources.

The backward “VV (CC)” position provides arc-sensing wire feed speed mode for use with constant current (formerly variable voltage) welding power sources.

WIRE SPEED DIAL AND RANGE SWITCH

The Wire Speed control dial on the front panel of the LN-25™ has two calibrated dial ranges selected by the HI-LO Dial Range switch.

When switched to the LO range position, the constant wire feed speed (CV Wire Feed Mode) is set on the inside (white) dial range calibrated for 50 to 350 in/min.

When switched to the HI range position, the constant wire feed speed (CV Wire Feed Mode) is set on the outside (black) dial range calibrated for 50 to 700 in/min.

The volts marks around the HI range calibrated dial indicate the minimum arc volts required to obtain the indicated HI range wire feed speeds. For example; if wire speed is set to 400 in/min., a welding procedure arc voltage of at least 17V would be required to obtain the 400 in/min. wire feed speed.

Return to Section TOC
Return to Master TOC

WORK CLIP LEAD

⚠ WARNING

ELECTRIC SHOCK can kill.

- Do not touch metal portions of the LN-25™ lead clip when welding power source is on.

⚠ WARNING

IMPORTANT SAFETY NOTE: To avoid possible electrical shock, do **not** touch the metal portions of the LN-25™ work lead clip if the power source output is on. The clip will be electrically "HOT" to work if the input electrode cable to the LN-25™ is electrically "HOT" even if the gun trigger is off and even if an internal contactor is used. Care should be taken to only handle the LN-25™ work clip by its non-metal insulated portions and/or the welding power source should be turned off before handling the work clip.

The 15 ft work clip lead attached to the front panel of the LN-25™ case must be connected directly to the work using the spring clip on the end of the lead.

If not connected, the LN-25™ will not operate even if a K431-1 or K624-1 (42V) Remote Output Control option (refer to ***Accessories Section***) is used. However, the electrode will still be electrically "HOT" when the clip lead is disconnected, if K431-1 or K624-1 (42V) Remote Output Control Option, or Internal Contactor (K443-1, 2 or3), is not used.

NOTE: The clip lead also serves as a work sensing lead for the LN-25™ Voltmeter (if installed). If the clip lead is extended by the user beyond the standard 15 ft. (4.6m) length, the voltmeter reading will be lower than the actual arc volts due to the LN-25™ motor control current flowing through the resistance of the extended lead. To minimize this voltmeter error, the following minimum lead size is recommended for the maximum extended lengths shown:

AWG	Maximum Length
#14	25 Ft (7.6m)
#12	50 Ft (15.2m)
#10	100 Ft (30.5m)
#6	200 Ft (61m)

REMOTE ARC VOLTAGE CONTROL (OPTIONAL)

This rheostat control allows you to control the power source output arc voltage level. Refer to K444, K444-1 and K444-2 Remote Voltage Kits in the ***Accessories section.***

GAS FITTING (OPTIONAL)

Provides gas output connection to the welding gun for the GMAW process. Refer to K430-1 or 2 Gas Solenoid Kit in the ***Accessories Section.***

GAS POST PRE-FLOW TIMERS (OPTIONAL)

Allows for variable adjustment of gas pre-flow & post-flow at the start and end of the weld. Refer to K434-1 Gas Flow Timer Kit in ***Accessories Section.***

Return to Section TOC
Return to Master TOC

SEQUENCE OF OPERATION

LOADING ELECTRODE

⚠ WARNING

ELECTRIC SHOCK can kill.

- Unless an optional output control or internal contactor is used with the LN-25™, the electrode circuit is electrically "Hot" when the power source is on.
- Turn off the power source while mounting electrode coils.

MOUNTING 22 TO 30 LB READI-REEL® COILS

The early models of the LN-25™ were factory equipped with a K363-P Readi-Reel® Adapter which is required to load Lincoln 22 to 30 lb Readi-Reel® coils. Later models require the optional K363-P adapter kit.

a. Make certain that the threaded locking collar is tight and securely locks the adapter on the spindle (See ***Figure B.2***).

b. Rotate the spindle and adapter so the retaining spring is at the 12 o'clock position.

c. Position the Readi-Reel® so that it will rotate in a clockwise direction when feeding (wire is to be dereeled from **bottom** of the coil).

d. Set one of the Readi-Reel® inside cage wires on the slot in the retaining spring tab.

e. Lower the Readi-Reel® to depress the retaining spring and align the other inside cage wires with the grooves in the molded adapter.

f. Slide cage all the way onto the adapter until the retaining spring "pops up" fully.

⚠ WARNING

Check to be sure the retaining spring has fully returned to the locking position and has securely locked the Readi-Reel® cage in place. Retaining spring must rest on the cage, not the welding electrode.

g. To remove Readi-Reel® from Adapter, depress retaining spring tab with thumb while pulling the Readi-Reel® cage from the molded adapter with both hands. It is not necessary to remove adapter from spindle.

h. Load wire into wire drive per ***Loading Wire Drive Section.***

MOUNTING 10 TO 30 LB SPOOLS

For 12" Diameter Spools:

a. Remove the locking collar and the Readi-Reel® adapter shipped on the 2" diameter spindle (adapter is not required).

b. Place the spool on the spindle so the brake holding pin enters one of the holes in the back side of the spool. Be sure the wire comes off the spool in a clockwise direction when dereeled from the bottom of the coil.

c. Replace and tighten the locking collar.

d. See ***Loading Wire Drive section*** for loading instructions.

For 8" Diameter Spools (Requires optional K468 Spindle Adapter for 8" Spools):

a. Remove the locking collar and the Readi-Reel® adapter shipped on the 2" diameter spindle (adapter is not required).

b. Slide S18221 Spindle Adapter onto the 2" spindle so the brake holding pin enters the adapter pin hole.

c. Place the spool on the spindle so the adapter tab enters one of the holes in the back side of the spool. Be sure the wire comes off the spool in a clockwise direction when dereeled from the bottom of the coil.

d. Replace and tighten the Locking Collar.

e. Load wire into wire drive per Loading Wire Drive Section.

MOUNTING 13 OR 14 LB INNERSHIELD COILS

(Requires Optional K435 Spindle Adapter for 14 lb Coils.)

a. Remove the locking collar and the Readi-Reel® adapter shipped on the 2" diameter spindle (adapter is not required).

b. Mount K435 Spindle Adapter and Innershield coil per the Instructions (S18256) included with the K435.

FIGURE B.2 – READI-REEL® INSTALLATION.

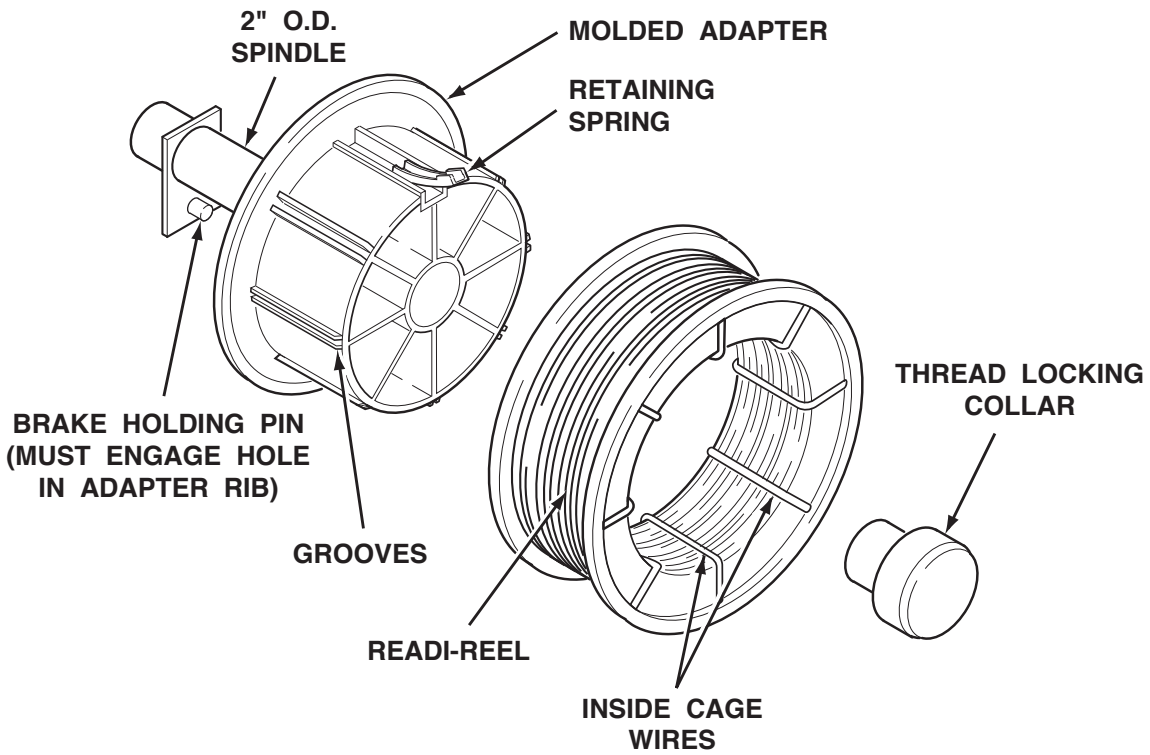

LOADING WIRE DRIVE

a. Turn the reel or spool until the free end of the electrode is accessible.

b. While tightly holding the electrode, cut off the bent end and straighten the first six inches. Cut off the first inch. (If the electrode is not properly straightened, it may not feed or may not go into the outgoing guide tube causing a "birdnest".)

c. Insert the free end through the incoming guide tube to the drive roll.

d. Turn on the welding power source.

⚠ WARNING

Unless an optional output control or internal contactor is used with the LN-25™, the electrode circuit is electrically "hot" when the power source is on.

e. Press the gun trigger and push the electrode until it **just** enters the drive roll.

⚠ WARNING

When inching with gun trigger, the electrode and drive mechanism are always "hot" to work and ground. Use the "cold" inch switch on models with internal contactor.

f. Inch the electrode through the gun.

g. Adjust the brake tension with the thumbscrew on the spindle hub until the reel turns freely, but with little or no overrun when wire feeding is stopped. Do not over tighten.

⚠ CAUTION

Keep gun in LN-25™ gun holder when not feeding wire to prevent accidental arcing.

IDLE ROLL PRESSURE SETTING

The idle roll pressure is set at the factory backed out two turns from full pressure. This is an approximate setting. For small wire sizes and aluminum wire, the optimum idle roll pressure varies with type of wire, surface condition, lubrication and hardness. The optimum idle roll setting can be determined as follows:

1. Press end of gun against a solid object that is electrically isolated from the welder output. Press the gun trigger for several seconds.

2. If the wire "birdnests," jams or breaks at the drive roll, the idle roll pressure is too great. Back the pressure setting out ½ turn, run new wire through gun, and repeat above steps.

3. If the only result is drive roll slippage, shut off the power source, then loosen the gun cable clamping

Return to Section TOC
Return to Master TOC

screw in the gearbox conductor block and pull the gun cable forward about six inches. There should be a slight waviness in the exposed wire. If there is no waviness, the pressure is too low. Increase the pressure setting ¼ turn, lock the gun cable in place and repeat the above steps.

PRESETTING WIRE FEED SPEED

The LN-25™ permits accurate presetting of the desired wire feed speed, before welding, in both CV and CC wire feed modes.

SETTING CONSTANT WIRE FEED SPEED (CV MODE)

a. Set Wire Feed Mode switch to CV position.

b. Set Dial Range switch to LO position for wire feed speeds up to 350 in/min., or HI position for wire feed speeds over 350 in/min.

c. Set Wire Feed dial to the desired wire feed speed on the selected calibrated dial range.

The wire speed will remain constant at the value set, independent of arc voltage changes, as long as the arc voltage does not drop below the value per the chart below for the max. wire feed speed shown:

Maximum Speed	Minimum Arc Volts
350 IPM	15V
400 IPM	17V
500 IPM	21V
600 IPM	24V
700 IPM	27V

SETTING ARC SENSING WIRE FEED SPEED (CC MODE)

When using a constant current (formerly variable voltage) power source, welding performance is improved using arc sensing wire feed speed (CC [VV] mode). In this wire feed mode the wire speed increases if arc voltage increases, and decreases if arc voltage decreases, but remains constant at any specific voltage level.

The LN-25™ permits accurate CC mode presetting of the desired wire feed speed, for the desired arc voltage to be used, by setting the Wire Speed dial in the following manner before welding:

a. Set Wire Feed Mode switch to CC position.

FIGURE B.3 – CC WIRE SPEED SETTING.

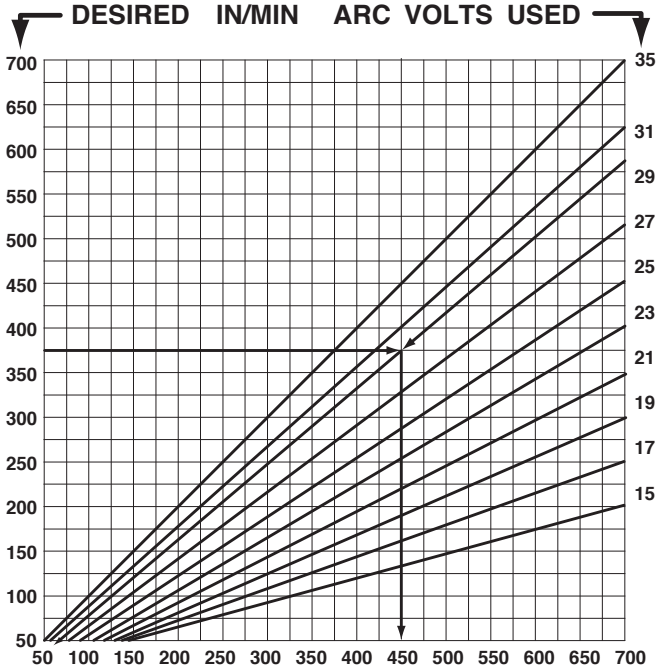

b. Referring to the graph located above the Mode switch (also shown in Figure B.3):

1. Select the horizontal line representing the DESIRED IN/MIN. for the welding procedure. (See example arrow line for 375 in/min.)
2. Select the diagonal line representing the ARC VOLTS to be used for the welding procedure. (See example arrow line for 29 volts.)
3. Determine the vertical line representing the CC WIRE SPEED SETTING where the above two lines cross. (See example arrow line for 450.)

c. Set the Wire Speed dial to the value determined in Step (3) above (450 for example used). Use HI Dial Range if value to be set is over 350.

The wire will feed at the DESIRED IN/MIN speed when the welding power source is set to the arc voltage to be used for the weld procedure (375 in/min. at 29V for example used).

A chart representation of the CC wire speed setting graph is shown in ***Figure B.4***, giving the Wire Speed dial setting required for the DESIRED IN/MIN and ARC VOLTS used for the welding procedures:

Return to Section TOC
Return to Master TOC

Return to Section TOC
Return to Master TOC

FIGURE B.4 – VV (CC) WIRE SPEED SETTING.

Desired In/Min	Arc Volts Used									
	16	18	20	22	24	26	28	30	32	34
50	109	97	88	80	73	67	63	58	55	51
60	131	117	105	95	88	81	75	70	66	62
70	153	136	123	111	102	94	88	82	77	72
80	175	156	140	127	117	108	100	93	88	82
90	197	175	158	143	131	121	113	105	98	93
100	219	194	175	159	146	135	125	117	109	103
110	241	214	193	175	160	148	138	128	120	113
120	263	233	210	191	175	162	150	140	131	124
130	284	253	228	207	190	175	163	152	142	134
140	306	272	245	223	204	188	175	163	153	144
150	328	292	263	239	219	202	188	175	164	154
160	350	311	280	255	233	215	200	187	175	165
170	372	331	298	270	248	229	213	198	186	175
180	394	350	315	286	263	242	225	210	197	185
190	416	369	333	302	277	256	238	222	208	196
200	438	389	350	318	292	269	250	233	219	206
210	459	408	368	334	306	283	263	245	230	216
220	481	428	385	350	321	296	275	257	241	226
230	503	447	403	366	335	310	288	268	252	237
240	525	467	420	382	350	323	300	280	263	247
250	547	486	438	398	365	337	313	292	273	257
260	569	506	455	414	379	350	325	303	284	268
270	591	525	473	430	394	365	338	315	295	278
280	613	544	490	445	408	377	350	327	306	288
290	634	564	508	461	423	390	363	338	317	299
300	656	583	525	477	438	404	375	350	328	309
310	678	603	543	493	452	417	388	362	339	319
320	700	622	560	509	467	431	400	373	350	329
330		642	578	525	481	444	413	385	361	340
340		661	595	541	496	458	425	397	372	350
350		681	613	557	510	471	438	408	383	360
360		700	630	572	526	484	450	420	394	370
380			666	604	554	512	472	444	416	392
400			700	636	584	538	500	466	438	412
420				668	612	566	526	490	460	432
440				700	642	592	550	514	482	452
460					670	620	576	536	504	472
480					700	646	600	560	526	494
500						674	626	584	546	514
520						700	650	606	568	536
540							676	630	590	556
560							700	654	612	576
580								676	634	598
600								700	656	618
620									678	638
640									700	658
660										680
680										700
700										

$$\text{VV(CC) Speed Setting} = \frac{\text{Desired IPM}}{\text{Arc Volts}} \times 35$$

MAKING A WELD

SETUP

a. Connect work cable to metal to be welded. Work cable must make good electrical contact to the work. The work must also be grounded as stated in "Arc Welding Safety Precautions."

b. Check that the LN-25™ is properly connected to the power source for the polarity and process to be used, and appropriate power source settings are made for the procedure to be used. (Refer to power source operating and connection instructions.)

NOTE: If the K431-1 Remote Output Control Kit or K624-1 42V Remote Control Module is installed but the LN-25™ is to be used **without** the Remote Control Cable Assembly, then the Remote Board harness plug must be removed from the 16-pin receptacle on the Control Board and the jumper plug (T13498-21) reinstalled.

c. Place the LN-25™ conveniently near the work area in a location to minimize exposure to weld spatter and to avoid sharp bends in the gun cable.

d. Connect the LN-25™ Clip Lead to work and set Polarity Switch to same polarity as electrode.

e. Set WIRE FEED MODE switch to CV or VV (CC), as appropriate for the power source, then set the proper DIAL RANGE and WIRE SPEED dial setting for the proper wire feed speed per the welding procedure:

For CV: Set dial to the calibrated IN/MIN desired. (Refer to ***Setting Constant Wire Feed Speed Section***.)

For CC: Set dial to value determined from the CC Wire Speed Graph for the DESIRED IN/ MIN and ARC VOLTS to be used. (Refer to ***Setting Arc Sensing Wire Feed Speed Section***.)

NOTE: If procedure permits a range of acceptable arc voltage, use the middle of the range to determine proper WIRE SPEED setting.

f. If using the optional Gas Flow Timer, set the desired PREFLOW TIME and POSTFLOW TIME.

g. Be sure the proper contact tip for the wire size being used is in the gun, and the gun is safe from work contact. (Use the LN-25™ insulated gun holder.)

Return to Section TOC
Return to Master TOC

h. Turn on the welding power source, as well as the shielding gas supply (if used).

⚠ WARNING

Unless an optional output control or internal contactor is used, the electrode is electrically "hot" when the power source is on. The gun trigger controls wire feed only.

⚠ WARNING

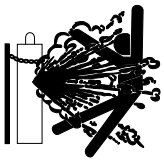

CYLINDER may explode if damaged.

- Keep cylinder upright and chained to support.
- Keep cylinder away from areas where it may be damaged.
- Never lift welder with cylinder attached
- Never allow welding electrode to touch cylinder.
- Keep cylinder away from welding or other live electrical circuits.

WELDING

⚠ WARNING

ARC RAYS can burn.

- Do not touch metal portions of the LN-25™ lead Clip when welding power source is on.

a. Cut the electrode within approximately ⅜" of the end of the contact tip for solid wire and within approximately ¾" of the extension guide for cored wire.

b. Position electrode over joint. End of electrode should be slightly off the work.

c. Lower welding helmet, close gun trigger, and begin welding. Hold the gun so the contact tip to work distance gives the correct electrical stickout as required for the procedure being used.

NOTE: If the arc voltage is not within the proper procedure range adjust the power source output control. (The CC mode WIRE SPEED setting should not be changed from the preset procedure value for the proper arc voltage.)

d. To stop welding, release the gun trigger and then pull the gun away from the work. Store the gun in the LN-25™ insulated gun holder when not welding.

PROCEDURE AT END OF COIL

When the wire on the reel is used up, the following procedure is to be followed for removing the old wire from the gun cable and loading a new reel.

a. Shut off power source if a Remote Output Control Option or internal contactor is not used.

b. Cut the end of the electrode off at the gun end. Do not break it off by hand since this puts a slight bend in the wire and makes it difficult or impossible to pull it back through the nozzle.

c. Uncouple the gun conductor cable from the LN-25™.

d. Lay the cable out straight.

e. Using pliers to grip the wire, pull it out of the cable from the connector end. Do not pull it from the gun end.

f. Put the conductor cable back on wire drive unit after the electrode has been removed.

g. Load a new coil of wire and feed it through the cable as described in Loading Electrode Section.

OPEN ARC WELDING WITH A CONSTANT CURRENT (formerly variable voltage) POWER SOURCE

Although a constant voltage (CV) power source is recommended for Innershield® and gas metal arc (GMAW) open arc welding, satisfactory general purpose welding may be obtained using the LN-25™ with a constant current (CC) power source for **non-critical** commercial quality mild steel welding applications.

Return to Section TOC
Return to Master TOC

⚠ CAUTION

Do not use LN-25™ models below Code 9200 with any TIG or Square Wave welding power sources. Do not use LN-25™ models equipped with internal contactors with non-Lincoln TIG or Square Wave welding power sources. Damage to the LN-25™ circuit can occur as a result of the high output inductance typically associated with these power sources. TIG high frequency power should never be applied to the LN-25™.

While welding with a continuously fed electrode, weld current variations are continuously taking place. There are many causes for these variations, but predominantly they occur due to changes in electrical stickout (operator hand movements, nozzle tip contact variations, etc.) and the dynamic metal transfer characteristics of the process or procedure being used (short arc, globular transfer, etc.).

When using a CV power source, these current variations have essentially no effect on the welding arc stability since CV power sources can provide a wide range of weld current levels with virtually no change in average arc voltage. These “flat slope” CV power sources, therefore, provide the arc power required to produce the best welding characteristics and ease of operation for most open arc, constant wire feed speed, welding processes.

CC (formerly VV) power sources, on the other hand, permit the arc voltage to decrease with increases in welding current. The output characteristics of these power sources can range from a “drooping slope,” which provide minor arc voltage changes with weld current variations, to “steep slope” which provide broad voltage changes with only minor current variations. The steeper the slope the more difficult it becomes to maintain arc voltage stability with a constant wire speed open arc process.

To aid in stabilizing the arc voltage when welding on CC power sources the LN-25™ is provided with a CC wire feed mode. This arc voltage sensing feed mode decreases (or increases) the wire speed when the arc voltage decreases (or increases). However, if the electrode shorts to the work, the arc voltage will essentially drop to zero and the short circuit current supplied by the CC power source may not provide enough power to re-establish the arc (especially with steeper slope machines). Under this condition the LN-25™ feeder will stop, as if the trigger was released, and not restart until the short has been opened.

Arc shorting is more difficult to avoid when using a CC power source, and requires a more refined operator technique than when using a CV power source. Improved performance can be obtained on CC power source applications within the following guidelines:

1. Flatter slope power sources with higher arc force (short circuit current) will improve performance over steep slope machines. The steeper the slope, the more critical it is to hold proper electrode stickout to maintain arc stability. Welding techniques, such as weaving, will be more difficult to control. Use the highest output current tap or setting capable of providing the voltage adjustment required for the procedure.
2. Use spray or non-shorting small ball type transfer processes at higher procedure voltage levels. Generally, open arc processes with procedure voltage levels over 22 volts perform satisfactorily. Arc stability at procedure voltage levels below 22 volts may be more difficult to control, with the general exception of fine (.023–.035) solid steel electrodes with Argon-rich shielding gas or NR-152 and NR-211 Innershield®.

CIRCUIT PROTECTION AND AUTOMATIC SHUTDOWN

The LN-25™ control provides automatic electronic protection circuits which shut down the LN-25™ under various fault conditions.

OVERVOLTAGE SHUTDOWN

If the power source open circuit voltage exceeds about 110-120 volts, the LN-25™ will not operate until the power source voltage drops below about 102-110 volts.

MOTOR OVERLOAD SHUTDOWN

If excessive motor overload occurs (due to prolonged excessive feeding force, jammed drive rolls or shorted motor leads), the LN-25™ will shut down within a few seconds after the overload occurs.

CONTROL PC BOARD (Codes above 9900).

The Control P.C. Board has electronic protection for trigger circuit faults to the electrode circuit.

The shutdown will reset automatically when the gun trigger is released, but will reoccur if the situation is not remedied.

TABLE OF CONTENTS
- ACCESSORIES SECTION -

Accessories . . . . . **Section C**
LN-25™ Option Chart C-2
Optional Accessories C-3
Gas Solenoid Kit C-3
K434-1 Gas Flow Timer Kit C-3
LN-25™ Contactor Kit C-4
Remote Output Control Options and Control Cable Assemblies C-4
K431-1 Remote Output Control Kit C-4
K433 Power Source Remote Box C-4
K432 Remote Control Cable Assembly C-4
K439 Remote Extension Cable Assembly C-5
K624-1 42V Remote Output Control Module C-5
K625, K626, K627 Remote Control Cable Assembly C-5
K444, K444-1 or K444-2 Remote Voltage Control Kit C-5
K363P Readi-Reel® Adapter Kit C-4
Gun Cable Connector Requirements To Permit Proper Connection
To LN-25™ Wire Feeder C-6

Return to Master TOC
Return to Master TOC
Return to Master TOC
Return to Master TOC

Return to Section TOC
Return to Master TOC

How to use Table C.1.

Determine which Kit No. is to be used. Locate that Kit No. in the left hand vertical column.
Scan horizontally to determine which LN-25™ model is required and what additional kits may be required.

TABLE C.1

LN-25™ OPTION CHART

O = **CANNOT BE USED WITH** X = **REQUIRED** ① = **REQUIRES ONE OF THESE** + = **INCLUDED WITH**

SEE TEXT

KIT NO.		LN-25™ MODELS			LN-25™ KITS												
		K428 LN-25™	K446 LN-25™	K449 LN-25™	K431-1	K432	K433	K443-1	K444	K444-1	K444-2	K460-1	K461	K624-1	K625	K626	K627
K430-1,2	Solenoid Kit	X	+	+													
K431-1	Remote Output Control Module	①	①	O		X	X	O	O	O	O	O		O			
K432	Remote Control Cable				X		X										
K433	115VAC Power Source Remote Box				X	X											
K434-1	Gas Flow Timer Kit			①	①			①				①		①			
K439	50 Ft. Ext. Cable					X											
K443-1	Contactor Kit			+	O							O		O			
K443-2	Contactor Kit Codes 10500,10558			+	O							O		O			
K443-3	Contactor Kit Codes 11144 & Above			+	O							O		O			
K444	Remote for Power Source w/Terminal Strip	①	①	①	O							O		O			
K444-1	Remote for Power Source w/6 Pin Amphenol	①	①	①	O							O		O			
K444-2	Remote for Power Source w/14 Pin Amphenol	①	①	①	O							O		O			
K-624-1	42VAC Remote Output Control Module	①	①	O	O			O	O	O	O	O			①	①	①
K625	500 Amp Cable /w Stud-Type Output Terminals													X			
K626	350 Amp Cable /w Stud-Type Output Terminals													X			
K627	400 Amp Cable /w Twist-Mate™ Type Terminals													X			
K460-1	Pulse Power™ Adapter Kit	①	①	O	O			O	O	O	O		X	O			
K461	Pulse Power™ Control Cable											X					

IMPORTANT SAFETY NOTE: This wire feeder provides "COLD" electrode when gun trigger is released if equipped with K431-1, K432 or K433 remote output control system, or K443-2 internal contactor kit. This feature and the use of a DC Constant Voltage welder provide an added margin of safety when welding must be performed under electrically hazardous conditions such as: • Damp locations • While wearing wet clothing • On metal structures, or, • In cramped positions (sitting, kneeling or lying) if there is a high risk of unavoidable or accidental contact with the workpiece or ground.

Return to Section TOC
Return to Master TOC

OPTIONAL ACCESSORIES

⚠ WARNING

ELECTRIC SHOCK can kill.

- Do not operate with covers removed.
- Turn off power source before installing or servicing.
- Do not touch electrically hot parts.
- Turn the input power to the welding power source off at the fuse box before working in the terminal strip.
- Only qualified personnel should install, use or service this equipment.

GAS SOLENOID KIT (K430-2 FOR CODES ABOVE 10500 OR K430-1 FOR CODES BELOW 10500)

(Factory Installed on K446 and K449 Models)

The kit permits the LN-25™ to be used for Gas Metal Arc Welding (GMAW) processes with a GMA gun cable.

The kit can be used with or without a Remote Output Control option installed in the LN-25™ and provides flow of shielding gas:

1. **With** wire feed, when the gun trigger is closed.
2. **Without** wire feed, when the kit's Purge button (located beneath the gas inlet fitting) is pressed.

NOTE: Always shut off the valve at the gas cylinder before making any gas connections to the LN-25™.

User must provide a supply of shielding gas, a pressure regulator, a flow control valve and a hose from the flow valve to the gas inlet fitting of the LN-25™. Install by connecting a supply hose from the gas flow valve outlet to the ⅝-18 female inert gas fitting on the back panel of the LN-25™ case. The LN-25™ can be used with any shielding gas recommended in the electrode's product literature at a maximum pressure of 60 psi (4.1 bar). This may include gases such as Argon, Helium, Nitrogen and blended gases such as Ar-He, Ar-N_2, Ar-O_2, Ar-CO_2, CO_2, Ar-CO_2-O_2.

⚠ WARNING

See American National Standard Z-49.1, "Safety in Welding and Cutting" published by the American Welding Society.

⚠ WARNING

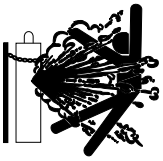

CYLINDER may explode if damaged.

- Keep cylinder upright and chained to support.
- Keep cylinder away from areas where it may be damaged.
- Never lift welder with cylinder attached.
- Never allow welding electrode to touch cylinder.
- Keep cylinder away from welding or other live electrical circuits.

See GMA Gun Cable Gas Connection.

Installation instructions are included with the kit.

K434-1 GAS FLOW TIMER KIT

(Requires either a K431-1 Remote Output Control Kit, K624-1 42V Remote Output Control Kit, or internal contactor K443-1 or K443-2 installed in LN-25™).

The K434-1 Gas Flow Timer Kit is used with the LN-25™ Gas Solenoid when the LN-25™ is equipped with any of the Remote Output Control Options or internal contactor.

This kit provides the following gas flow timer functions:

1. **Preflow Control** - Provides flow of shielding gas to the work before the arc is established. The solenoid valve is energized immediately when the gun trigger is closed, but the time delay before the wire feeder and welding output are energized is adjustable between at least 0 to 1 second.
2. **Postflow Control** - Provides flow of shielding gas to the work after welding is stopped. Delay of the shut off of the solenoid valve after the gun trigger is released is adjustable between at least 0.5 to 5 seconds.

Installation instructions are included with this kit.

Return to Section TOC
Return to Master TOC

LN-25™ CONTACTOR KIT (K443-1 FOR CODES BELOW 10500, K443-2 FOR CODES 10500 TO 10558 OR K433-3 FOR CODES ABOVE 11144)

(Factory installed in K449 Model.)

The internal contactor provides "cold" electrode until the gun trigger is pressed, and a fixed burnback time delay to prevent electrode from sticking in the weld crater when the trigger is released. The contactor is rated for use up to 300 amps. A cold inch switch allows the wire to be loaded into the system without being electrically "hot".

Installation Instructions are included with the kit.

⚠ CAUTION

These kits can only be used with LN-25™'s above Code 9200 or with LN-25™'s equipped with a G1757-3 (or higher part number) Control PC board. To prevent possible damage to the LN-25™ with internal contactor, do not connect to non-Lincoln TIG or Square Wave power sources. TIG high frequency power should never be applied to the LN-25™.

NOTE: The K443-1, K443-2 or K433-3 cannot be used with K431-1 or K624-1 Remote Output Control Kit. If remote voltage control is desired along with the internal contactor, obtain a K444, K444-1 or K444-2 Remote Voltage Control Kit.

REMOTE OUTPUT CONTROL OPTIONS AND CONTROL CABLE ASSEMBLIES

Remote Output Control Options are available to provide the LN-25™ with the following additional features:

1. "Cold" electrode until the gun trigger is pressed, and a fixed burnback time delay to prevent electrode from sticking in the weld crater when the gun trigger is released.
2. Remote (10K ohm rheostat) control of power source output arc voltage level.

K431-1 REMOTE OUTPUT CONTROL KIT

(For use with K432 Remote Control Cable and K433 Power Source Remote Box.)

The Kit includes a Remote PC board and control cable receptacle which mount and connect inside the LN-25™ control box per the Installation Instructions (M17584) included with the kit.

NOTE: If the K431-1 Remote Output Control Kit is installed but the LN-25™ is to be used without the K432 Remote Control Cable Assembly, then the Remote Board harness plug must be removed from the 12-pin receptacle on the Control Board and the jumper plug (T13498-21) reinstalled.

K433 POWER SOURCE REMOTE BOX

(Requires K431-1 Remote Output Control Kit installed in LN-25™ using K432 Remote Control Cable.)

The Remote Box is designed to mount and connect to Lincoln Idealarc® semiautomatic power sources per the Installation Instructions and power source connection diagrams included with the kit.

The Remote Box provides the proper welding power source control interface and isolated 24V AC input supply for the LN-25™ equipped with the K431-1 Remote Output Control Kit.

Remote Box requires 115V AC, 50/60 Hz input and a welding power source using a contact closure output pilot circuit, as available on appropriate Lincoln welding power sources.

K432 REMOTE CONTROL CABLE ASSEMBLY

(Requires K431-1 Remote Output Control Kit installed in LN-25™ and K433 Remote Box mounted to power source with 115V AC auxiliary power.)

The K432 control cable assemblies include an electrode cable, rated for up to 500 amps 60% duty cycle, and a 6-conductor control cable with pin connectors on both ends. Available in 25, 50, 75 and 100 ft. lengths.

The cable assembly end with the socket pin connector connects to the LN-25™ per the Instructions included with the K431-1 kit.

The cable assembly end with the male pin connector connects to the K433 and power source per the Instructions included with the K433 kit.

K363P READI-REEL® ADAPTER KIT

Adapts Lincoln Redi-Reel® coils of electrode 30 lb. (14kg) and 22 lb. (10kg) to a 2" (51mm) spindle. Durable molded plastic one piece construction. Designed for easy loading: adapter remains on spindle for quick changeover.

Return to Section TOC
Return to Master TOC

K439 REMOTE EXTENSION CABLE ASSEMBLY

The 50 ft. Extension cable assemblies are used to extend the K432 Remote Control Cable Assembly when longer cable lengths are required.

Multiple K439 Extensions may be used, however, to prevent excessive weld cable voltage drops, the 500 amp max. rating of the K432 should be reduced by at least 50 amps for each K439 Extension used. For example, if three K439 Extensions are used (150 ft total extension), the maximum welding current used should be less than 350 amps.

The K439 Extension cable end with the male pin connector connects to the K433 Remote Box and power source per the Instructions included with the K433 kit.

The K439 Extension cable end with the socket pin connector connects to the mating K432 cable end (or next K439 Extension cable end). The electrode cables are connected using the bolt and nut provided with the K439 Extension. Properly insulate the bolted connection with electrical tape.

K624-1 42V REMOTE OUTPUT CONTROL MODULE

(For use with K625, K626, K627 Remote Control Cable)

The Module includes a 42V Remote PC board and control cable receptacle which mount and connect inside the LN-25™ control box per the Installation Instructions included with the kit.

NOTE: If the K624-1 42V Remote Output Control Module is installed but the LN-25™ is to be used without the K625, K626 or K627 Remote Control Cable Assembly, then the Remote Board harness plug must be removed from the 16-pin receptacle on the Control Board and the jumper plug (T13498-21) reinstalled.

K625, K626, K627 REMOTE CONTROL CABLE ASSEMBLY

(Requires K624-1 Remote Output Control Module installed in LN-25™.)

The K625, K626, K627 control cable assemblies include an electrode cable and a 8-conductor control cable:

CABLE TYPE	60% DUTY RATING	POWER SOURCE ELECTRODE CONNECTION
K625	500 Amps	Stud Terminal
K626	350 Amps	Stud Terminal
K627	400 Amps	Twist-Mate™

The cable assembly end with the socket pin connector connects to the LN-25™ per the Instructions included with the K624-1 Kit.

The cable assembly end with the male pin connector connects to the power source per the Instructions included with the K624-1 kit.

K444, K444-1 OR K444-2 REMOTE VOLTAGE CONTROL KIT

(Not required if using K431-1 or K624-1 Remote Output Control Kit.

The Remote Voltage Control Kit provides remote (10K ohm rheostat) control of power source output arc voltage level.

K444 connects to power sources with control terminal strip connections for lead numbers 75, 76 and 77.

K444-1 connects to power sources with a 6-pin control receptacle.

NOTE: To use a K444-1 with power sources with only a 14-pin control receptacle, a K864 Adapter is required to connect to K444-1 and if using a power source without an output control switch, a K484 Jumper Plug will also be required to jumper the output pilot circuit (2-4).

K444-2 connects to power sources with a 14-pin control receptacle and provides a 2-4 jumper to activate power source output.

Installation Instructions are included with the kit.

K577-1 REAR HANDLE KIT

(For LN-25™ model codes above 9383)

The fold-down handle mounts to the rear of the LN25 case per the Installation Instructions (M16567) shipped with the kit.

This handle provides a means to also carry the LN25 in the vertical position, especially convenient for passing the unit through a manhole.

Return to Section TOC
Return to Master TOC

The following Figures C.1 and C.2 should serve as a guide to determine if a particular gun or switch can be connected to the LN-25™.

FIGURE C.1

GUN CABLE CONNECTOR REQUIREMENTS TO PERMIT PROPER CONNECTION TO LN-25™ WIRE FEEDER.

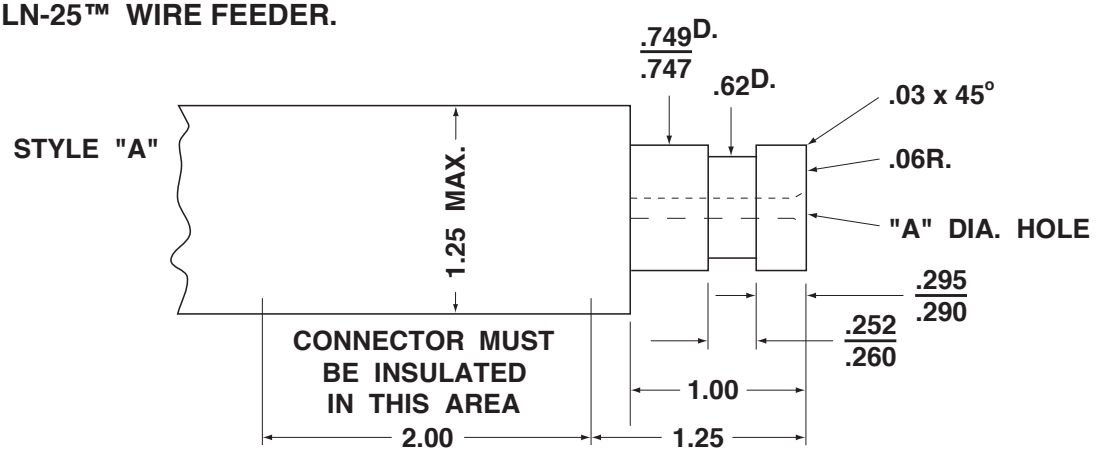

LN-25 Connector for 1/16 (.062) through 5/64 Wire

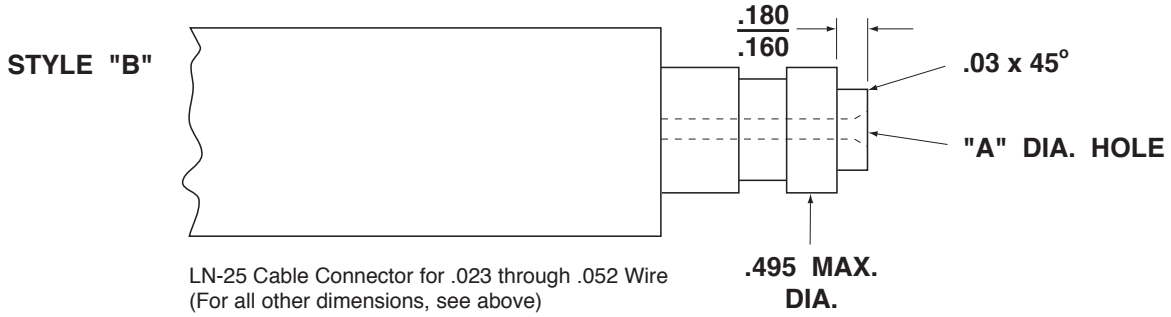

LN-25 Cable Connector for .023 through .052 Wire
(For all other dimensions, see above)

FIGURE C.2 – SWITCH REQUIREMENTS.

NOTE: Connector part with .749/.747 diameter should be made from brass if it is to be part of the welding current carrying circuit.

Wire Size	"A Dia. Hole" To be Concentric to .749/.747 Dia. Within .008 F.I.M.
.068 thru 5/64	.125 (1/8 Drill)
1/16 (.062)	.078 (5/64 Drill)
.045 & .052	.062 (1/16 Drill)
.023 thru .035	.055 (#54 Drill)

Drive Roll & Guide Tube Kit No.	Wire Sizes Used
T-13355-3/32	5/64, .072 & .068
T-13355-1/16[1]	1/16, .062
T-13355-.052C	.045, .052 Cored
T-13355-.052	.045, .052 Solid
T-15010.-.035S	.023 thru .035 Solid

[1] Can also be used for .052" wire

SWITCH REQUIREMENTS

½ Amp AC 24 Volts – Inductive
½ Amp DC 24 Volts – Inductive

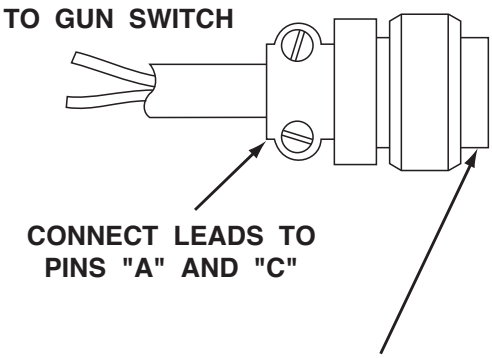

S12024-1 (L.E. PART NO.)
AMPHENOL AN3057-10 (OR EQUIV.)
S12020-6 (L.E. PART NO.)
AMPHENOL MS-3106A-18-11P (OR EQUIV.)

TABLE OF CONTENTS
- MAINTENANCE SECTION -

Maintenance . . . . . **Section D**
Safety Precautions D-2
Routine Maintenance D-2
Drive Rolls and Guide Tubes D-2
Wire Reel Spindle D-2
Control Box D-2
Wire Drive Motor and Gearbox D-2
Gun and Cable Maintenance D-2
Circuit Protection and Automatic Shutdown D-2
Control PC Board Fuse D-2
Automatic Protection Shutdown D-2
Adjusting Speed Sensor Module D-2
Calibration of LN-25™ Wire Speed Dial D-3

Return to Master TOC
Return to Master TOC
Return to Master TOC
Return to Master TOC

Return to Section TOC
Return to Master TOC

SAFETY PRECAUTIONS

⚠ WARNING

ELECTRIC SHOCK can kill.

- Do not operate with covers removed.
- Turn off power source before installing or servicing.
- Do not touch electrically hot parts.
- Turn the input power to the welding power source off at the fuse box before working in the terminal strip.
- Only qualified personnel should install, use or service this equipment.

ROUTINE MAINTENANCE

DRIVE ROLLS AND GUIDE TUBES

After feeding every coil of wire, inspect the drive roll section. Clean it as necessary. Do not use a solvent for cleaning the idle roll because it may wash the lu - bricant out of the bearing. The drive roll, idle roll and guide tubes are stamped with the wire sizes they will feed. If a wire size other than that stamped on the rolls is to be used, the rolls and guide tubes must be changed.

The drive rolls for .035 through .052 cored electrode and 1/16 through 5/64 electrode have a double set of teeth so they can be reversed for additional life. Drive rolls for .023 through .052 solid electrode and aluminum sizes have no teeth but use two grooves so they also can be reversed for additional life.

See Wire Feed Drive Roll and Guide Tube Kits Sec - tion for roll changing instructions.

WIRE REEL SPINDLE

No routine maintenance required. Do not lubricate spindle.

CONTROL BOX

Every six months open and inspect the control section. The accumulated dirt should be gently blown off all of the electrical components. Be sure the air that is being used is dry. Check that lead plugs are secure in their receptacles.

WIRE DRIVE MOTOR AND GEARBOX

Every year examine the gearbox. Paint the gear teeth with molydisulfide filled grease. **Do not** use a graphite grease.

Check the motor brushes. Replace if they are worn down to ¼" or less. When ordering feed motor brushes, give all information from the motor nameplate.

GUN AND CABLE MAINTENANCE

See IM manual provided with the gun and cable assembly.

CIRCUIT PROTECTION AND AUTOMATIC SHUTDOWN

CONTROL PC BOARD FUSE

On G1757-6 (or higher part no.) PC boards the ⅛ amp fuse was replaced with electronic protection for trigger circuit faults to electrode circuit.

On G1757-2 through -5 part no. PC boards, the ⅛ amp fuse interrupts the 500A lead to the trigger switch. On G1757- 1 PC boards a 5 amp fuse was used to interrupt the 667 lead. The LN-25™ will not operate if the fuse is blown.

AUTOMATIC PROTECTION SHUTDOWN

(See ***Automatic Protection Shutdown*** Section.)

ADJUSTING SPEED SENSOR MODULE

The LN-25™ Speed Sensor Module is a three lead Hall Effect switch device encased in an externally threaded housing which is screwed into a mounting plate on the motor side of the wire drive gearbox.

Return to Section TOC
Return to Master TOC

Proper positioning of this module is critical to proper operation of the LN-25™ wire feed speed control. If the device is not screwed in far enough, the LN-25™ motor speed could be unstable or run at full speed with no control. If screwed in too far, it will rub a moving part inside the gearbox.

The module is properly mounted to the gearbox as shipped from the factory. If the device is ever removed or replaced, proper mounting technique is as follows:

1. Be sure all power to the LN-25™ is shut off at the power source.
2. Check that the module mounting plate is screwed securely to the side of the gearbox. Refer to ***Drive Motor and Gearbox Replacement Procedure*** and access to the ***Hall Effect Module*** in the Troubleshooting and Repair Section.
3. Gently screw the module into the mounting plate until it **just** touches and stops against the rotating part inside the gearbox.
4. Back the module out ½ turn, then snug the module lock nut without rotating the module position. Do not over tighten lock nut.

CALIBRATION OF LN-25™ WIRE SPEED DIAL

Calibration of the LN-25™ Wire Speed dial is achieved by proper mounting of the dial knob to the speed potentiometer shaft. Whenever the knob is removed, the dial is recalibrated as follows:

NOTE: Knob set screw does **not** seat on shaft flat.

1. Be sure the Wire Speed potentiometer mounting nut is securely tightened, then rotate the potentiometer shaft so its flat faces about to the 100 mark on the LO range calibrated dial.
2. Set DIAL RANGE switch to LO and WIRE FEED MODE switch to CV position.
3. Press gun trigger to feed wire and measure the wire feed speed (IN/MIN) using a Portable Digital Wire Feed Speed Meter (Lincoln K283). Take at least two readings to assure repeatable accuracy.

⚠ WARNING

Electrode will be electrically “hot”. Do not allow fed wire to contact any metal common with welding work.

An alternate means to measure wire feed speed is as follows:

a. Cut wire off at the end of the gun tip.
b. Press trigger to feed wire for exactly 30 seconds.
c. Cut fed wire off at the end of the gun tip and accurately measure its length.
d. Multiply the measured length by 2 to obtain the wire speed (IN/MIN).
e. Repeat above steps to assure repeatable accuracy.

4. Carefully slip speed knob onto potentiometer shaft so it points precisely to the wire speed measured in step 3, then secure the knob set screw without disturbing the position. Recheck by repeating step 3.

NOTES

D-4

Return to Section TOC
Return to Master TOC
Return to Section TOC
Return to Master TOC
Return to Section TOC
Return to Master TOC
Return to Section TOC
Return to Master TOC

TABLE OF CONTENTS
- THEORY OF OPERATION SECTION -

Theory of Operation . . . . . **Section E**
General Description E-2
Control Circuit Operation E-2
Input Power Circuit E-2
Welding Current Circuit E-2
Feedback and Control Circuits E-3
Trigger Circuit E-3
Optional Circuits E-4
Contactor E-4
Gas Solenoid E-4
Protective Devices & Circuits E-5
Overvoltage Shutdown E-5
Motor Overload Shutdown E-5
Control PC Board Fuses E-5

FIGURE E.1 THEORY OF OPERATION BLOCK DIAGRAM

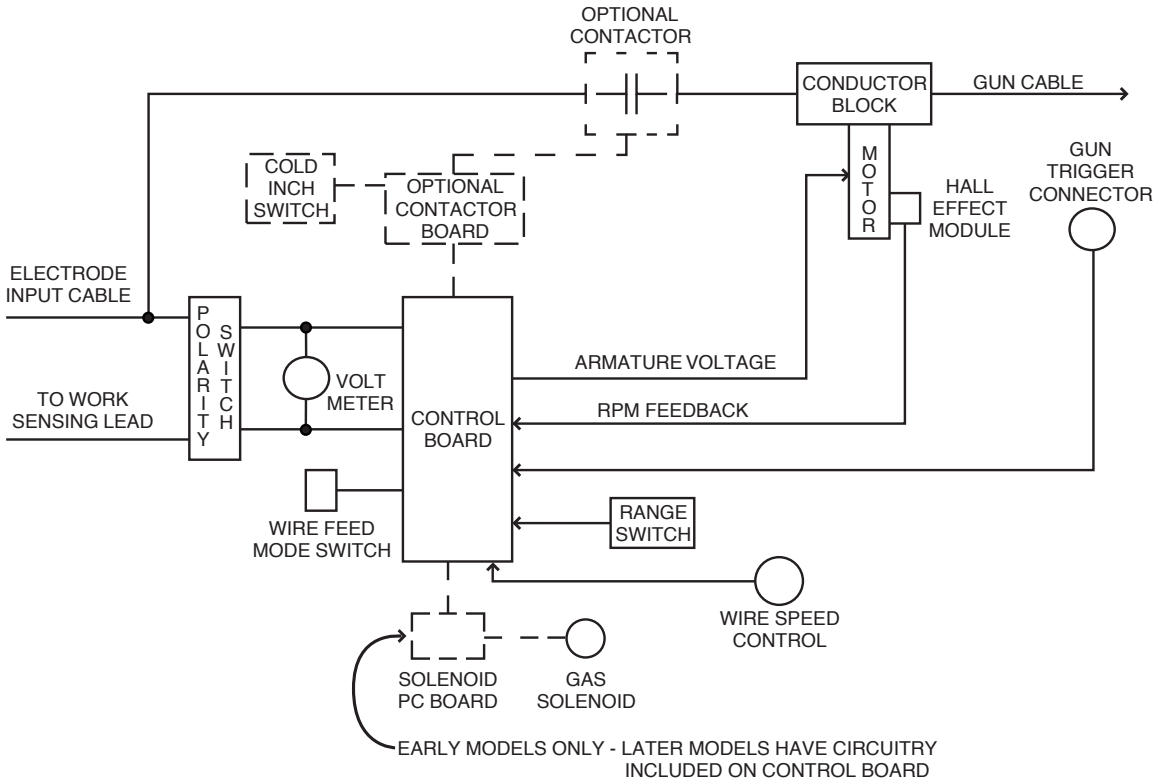

LINCOLN® ELECTRIC

Return to Master TOC
Return to Master TOC
Return to Master TOC
Return to Master TOC

GENERAL DESCRIPTION

The LN-25™ is a portable semiautomatic wire feeder designed to operate from a DC arc voltage. It is designed for maximum versatility in a variety of field applications. It can be used with most constant voltage or constant current DC power sources without the need of a control cable.

FIGURE E.2 – INPUT POWER CIRCUIT.

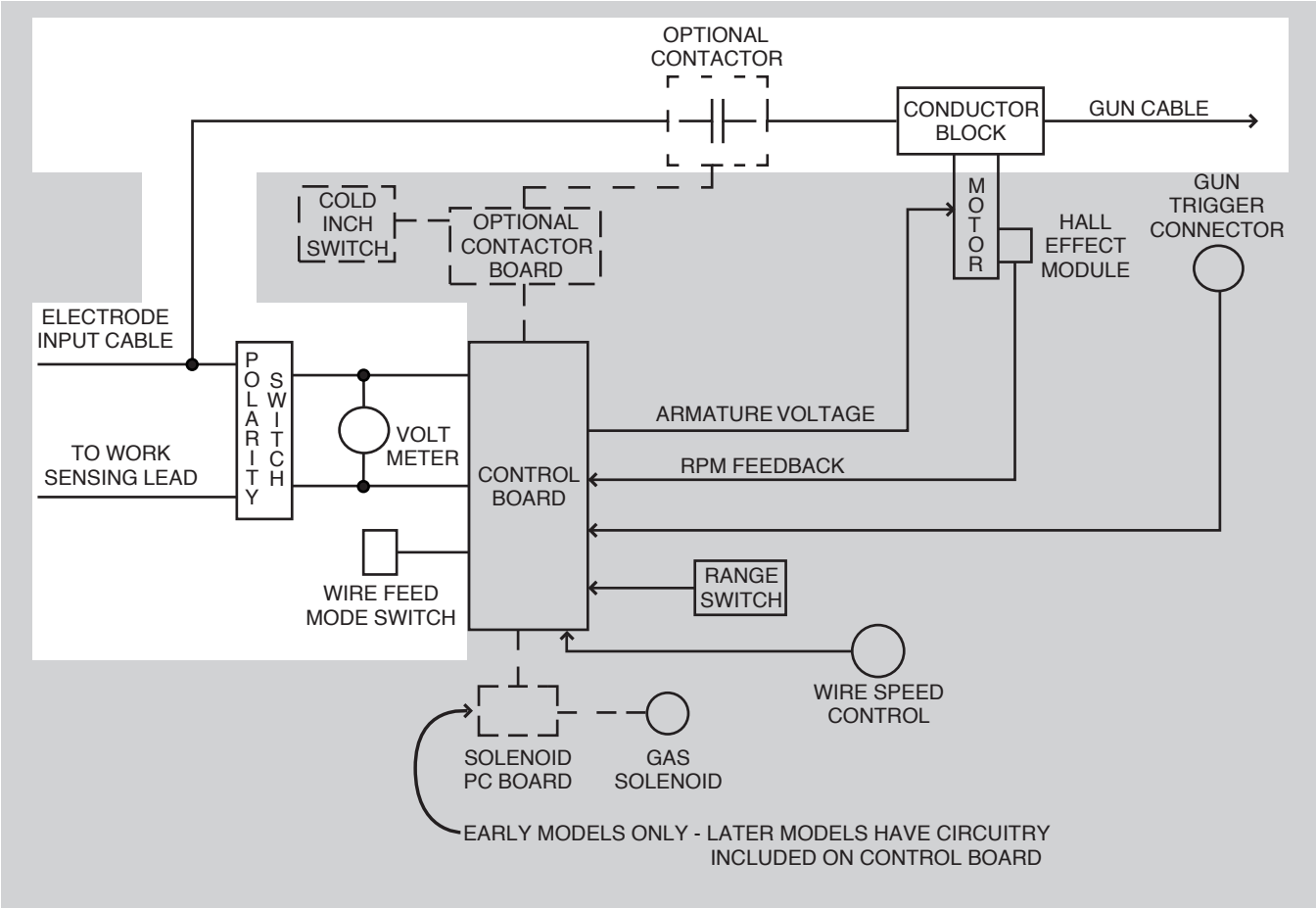

CONTROL CIRCUIT OPERATION

INPUT POWER CIRCUIT

The DC arc voltage from the power source is applied to the LN-25™ through the electrode cable and work sensing lead. This DC voltage is connected to the polarity switch, which allows the wire feeder to be used in either electrode positive or electrode negative polarity. The voltage is then coupled to the voltmeter and control board. A wire feed mode switch is included to give the user the capability of using a constant voltage or, in some processes, a constant current power source. See Figure E.2.

WELDING CURRENT CIRCUIT

The electrode voltage is also applied to the conductor block through a heavy current carrying cable. The welding gun cable is connected to the conductor block. This combination of welding cable, optional contactor, conductor block and gun cable constitute the welding current path to the electrode wire. See Figure E.2.

NOTE: Unshaded areas of block logic diagrams are the subject of discussion.

Return to Section TOC
Return to Master TOC

FIGURE E.3 – CONTROL CIRCUITS.

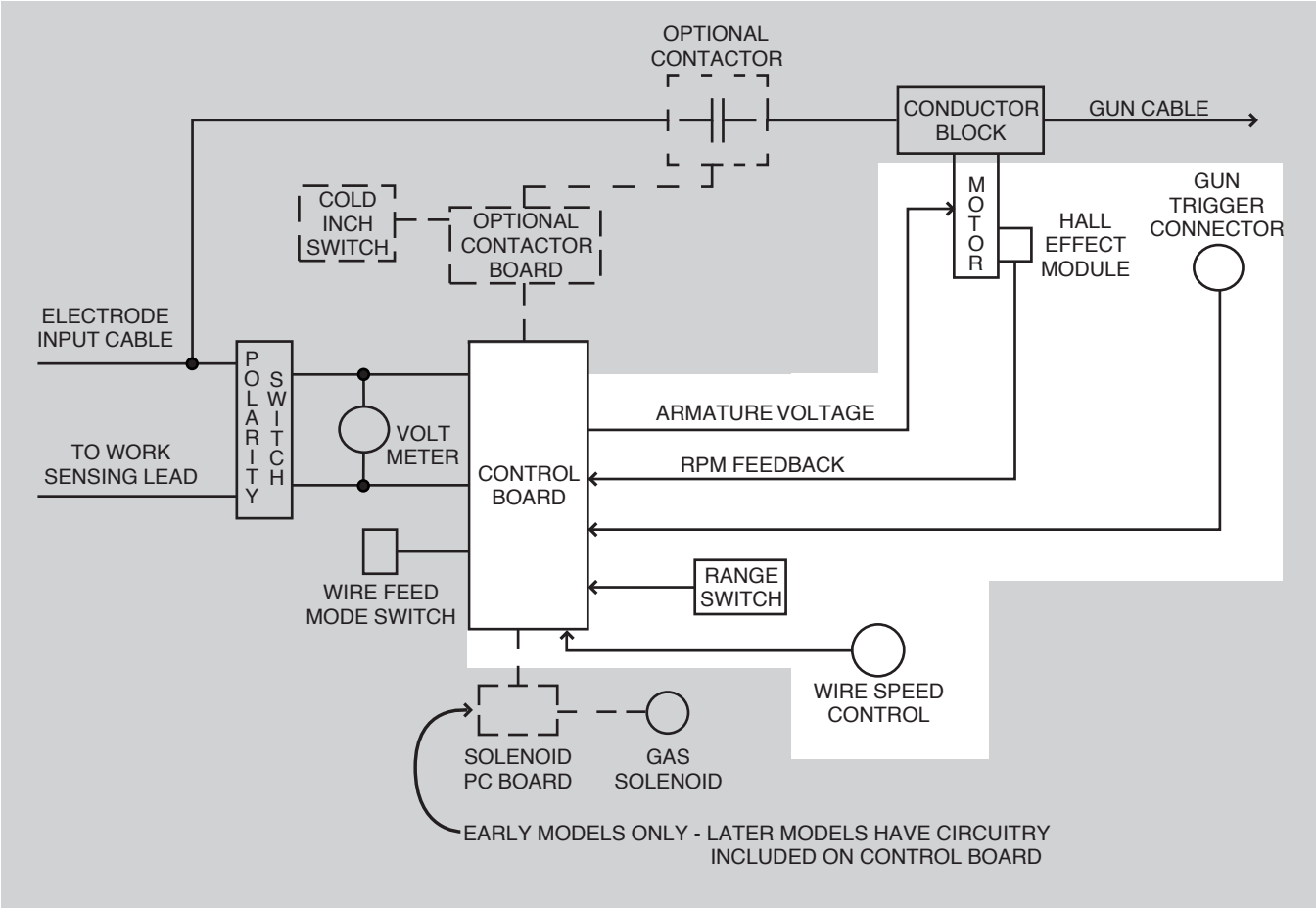

FEEDBACK AND CONTROL CIRCUITS

The combination of the range switch and wire speed control provides a command voltage for the control board. The hall effect module transforms the motor RPM to a digital voltage frequency that is “fed back” to the control board. When operating in the constant voltage (CV) mode, the control board monitors the “feedback signal”, compares it to the command voltage and delivers the appropriate armature voltage to the wire feed motor. In this manner, a constant wire feed speed is maintained. See Figure E.3. When the LN-25™ is connected to a constant current (CC) power source, a variable wire feed speed is desirable to compensate for the varying arc voltages associated with the constant current process. To accomplish this, the control board monitors the command voltage, the feedback signal from the hall effect module and the arc voltage. These three factors are monitored and compared, and then the appropriate armature voltage is applied to the wire feed motor.

TRIGGER CIRCUIT

When the gun trigger is closed, the control board is “signaled” to apply armature voltage to the drive motor and to activate any auxiliary circuits that may be incorporated within the LN-25™. See Figure E.3.

NOTE: Unshaded areas of block logic diagrams are the subject of discussion.

LINCOLN ELECTRIC

Return to Section TOC
Return to Master TOC

FIGURE E.4 – OPTIONAL CIRCUITS.

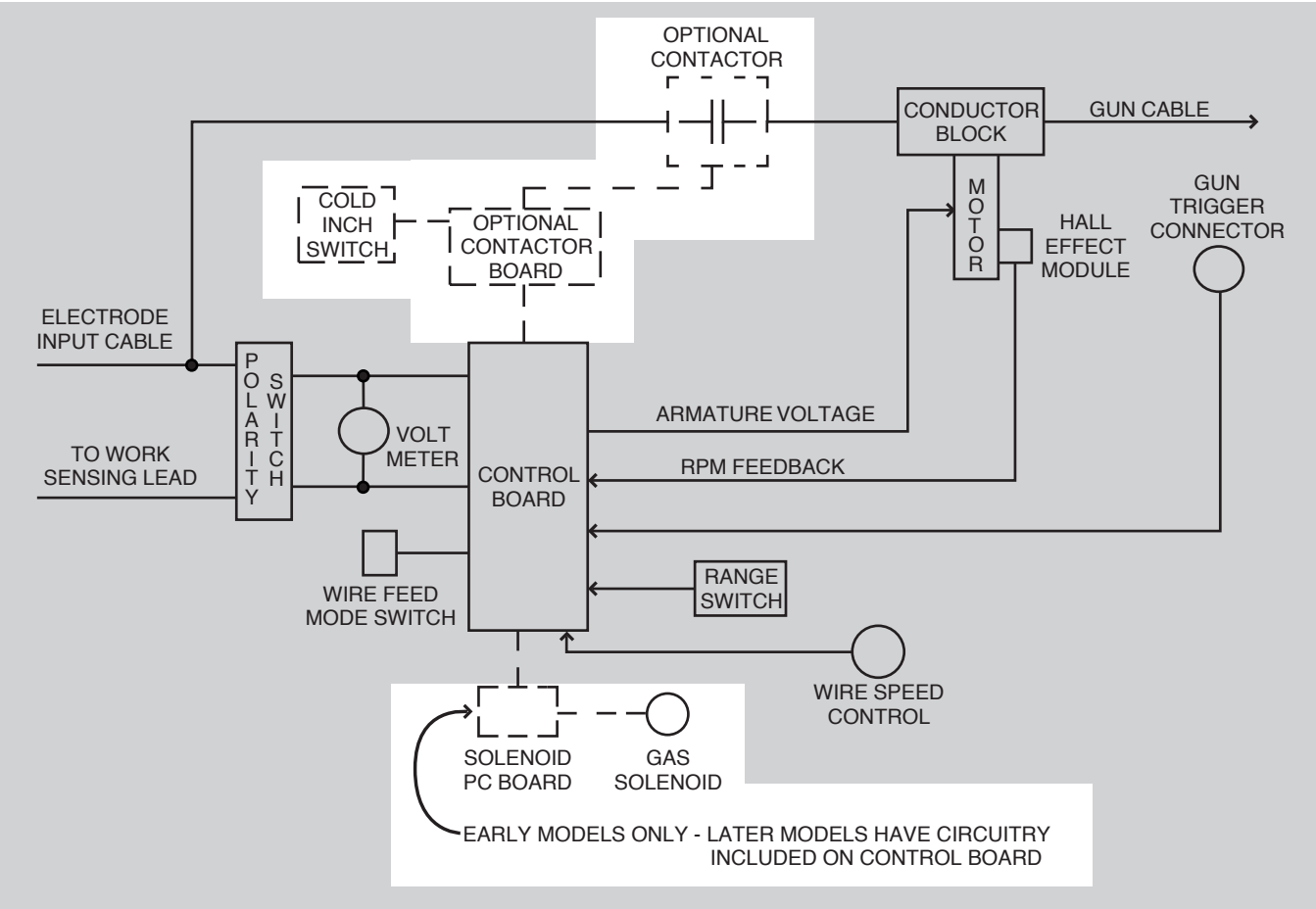

OPTIONAL CIRCUITS

CONTACTOR

The contactor, contactor PC board, and cold inch switch are commonly incorporated in the LN-25™. This feature enables the user to have an electrically "COLD" gun even though the power sources output terminals are electrically "HOT". Upon receiving a command from the control board, the contactor PC board sends a current signal to activate the contactor. The signal closes the welding current path from the cable to the conductor block, making the gun electrically "HOT". The cold inch switch allows the user to feed wire without closing the contactor. In this manner, the electrode wire can be fed through the gun with the gun tip electrically "COLD". See Figure E.4.

LATER MODELS

Codes above 11144 have the Contactor circuitry added to the Control Board and the Contactor PC Board has been eliminated. Older codes that have been upgraded to the newew PControl Board may have had the Contactor PC Board removed

GAS SOLENOID
Early Models Only (Below 10500)

The gas solenoid feature permits the LN-25™ to be used for gas metal arc welding (GMAW) processes. When the gun trigger circuit is activated, the control board signals the solenoid PC board to activate the gas solenoid, which allows shielding gas to flow through the gun to the arc.

Later Models Only (Above 10500)

The solenoid PC board circuitry has been added to the Control board and the solenoid PC board has been eliminated.

NOTE: Unshaded areas of block logic diagrams are the subject of discussion.

Return to Section TOC
Return to Master TOC

Return to Section TOC
Return to Master TOC

PROTECTIVE DEVICES AND CIRCUITS

OVERVOLTAGE SHUTDOWN

If the power source open circuit voltage exceeds about 110-120 volts, the LN-25™ will not operate until the power source voltage drops below about 102-112 volts.

MOTOR OVERLOAD SHUTDOWN

If excessive motor overload occurs (due to prolonged excessive feeding force, jammed drive rolls or shorted motor leads) the LN-25™ will shut down within a few seconds after the overload occurs. The shutdown will reset automatically when the gun trigger is released, but will reoccur if the overload situation is not remedied

CONTROL PC BOARD FUSES

On G1757-2 thru -5 part no. PC boards, the 1/8 amp fuse interrupts the 500A lead to the trigger switch. On G1757-1 PC boards, a 5 amp fuse was used to interrupt the 667 lead. The LN-25™ will not operate if either fuse is blown.

On G1757-6 (or higher) part no. PC boards, the 1/8 amp fuse was replaced with electronic protection for trigger circuit faults to electrode circuit.

NOTES

E-6

Return to Section TOC
Return to Master TOC
Return to Section TOC
Return to Master TOC
Return to Section TOC
Return to Master TOC
Return to Section TOC
Return to Master TOC

TABLE OF CONTENTS
- TROUBLESHOOTING AND REPAIR SECTION -

Troubleshooting and Repair . . . . . **Section F**
How to Use Troubleshooting Guide F-2
PC Board Troubleshooting Procedures F-3
Troubleshooting Guide F-4
Test Procedures
Gas Solenoid Valve and Solenoid PC Board Test F-7
Gas Solenoid Valve and Control PC Board Test F-13
Hall Effect Module Test F-19
Wire Drive Motor Test F-23
Contactor & Contactor PC Board Test F-25
Component Replacement Procedures
Contactor PC Board Replacement F-31
Control PC Board Replacement F-35
Contactor Replacement (codes below 10500) F-39
Contactor Replacement (codes above 10500) F-41
Gas Solenoid Valve and/or Solenoid
PC Board (If Present) Replacement F-43
Drive Motor And Gearbox Replacement and
Access to Hall Effect Module F-47
Retest After Repair F-51

⚠ WARNING

ELECTRIC SHOCK can kill.

- Never work on the inside of the machine without removing the input power. You can receive a life threatening electrical shock if you fail to do this. Only qualified technicians should perform installation, maintenance, and troubleshooting work on the machine.

Return to Master TOC
Return to Master TOC
Return to Master TOC
Return to Master TOC

Return to Section TOC
Return to Master TOC

HOW TO USE TROUBLESHOOTING GUIDE

⚠ WARNING

Service and Repair should only be performed by Lincoln Electric Factory Trained Personnel. Unauthorized repairs performed on this equipment may result in danger to the technician and machine operator and will invalidate your factory warranty. For your safety and to avoid Electrical Shock, please observe all safety notes and precautions detailed throughout this manual.

This Troubleshooting Guide is provided to help you locate and repair possible machine malfunctions. Simply follow the three-step procedure listed below.

Step 1. LOCATE PROBLEM (SYMPTOM).
Look under the column labeled "PROBLEM (SYMPTOMS)". This column describes possible symptoms that the machine may exhibit. Find the listing that best describes the symptom that the machine is exhibiting. Symptoms are grouped into the following categories: output problems, function problems, wire feeding problems, and welding problems.

Step 2. PERFORM EXTERNAL TESTS.
The second column labeled "POSSIBLE AREAS OF MISADJUSTMENT(S)" lists the obvious external possibilities that may contribute to the machine symptom. Perform these tests/checks in the order listed. In general, these tests can be conducted without removing the case wrap-around cover.

Step 3. RECOMMENDED COURSE OF ACTION
The last column labeled "Recommended Course of Action" lists the most likely components that may have failed in your machine. It also specifies the appropriate test procedure to verify that the subject component is either good or bad. If there are a number of possible components, check the components in the order listed to eliminate one possibility at a time until you locate the cause of your problem.

All of the referenced test procedures referred to in the Troubleshooting Guide are described in detail at the end of this chapter. Refer to the Troubleshooting and Repair Table of Contents to locate each specific Test Procedure. All of the specified test points, components, terminal strips, etc. can be found on the referenced electrical wiring diagrams and schematics. Refer to the Electrical Diagrams Section Table of Contents to locate the appropriate diagram.

⚠ CAUTION

If for any reason you do not understand the test procedures or are unable to perform the tests/repairs safely, contact the Lincoln Electric Service Department for technical troubleshooting assistance before you proceed. Call 1-888-935-3877.

PC BOARD TROUBLESHOOTING PROCEDURES

⚠ WARNING

ELECTRIC SHOCK can kill.

- Have an electrician install and service this equipment. Turn the input power OFF at the fuse box before working on equipment. Do not touch electrically hot parts.

⚠ CAUTION

Sometimes machine failures appear to be due to PC board failures. These problems can sometimes be traced to poor electrical connections. To avoid problems when troubleshooting and replacing PC boards, please use the following procedure:

1. Determine to the best of your technical ability that the PC board is the most likely component causing the failure symptom.
2. Check for loose connections at the PC board to assure that the PC board is properly connected.
3. If the problem persists, replace the suspect PC board using standard practices to avoid static electrical damage and electrical shock. Read the warning inside the static resistant bag and perform the following procedures:

PC board can be damaged by static electricity.

ATTENTION Static-Sensitive Devices Handle only at Static-Safe Workstations

- Remove your body's static charge before opening the static-shielding bag. Wear an anti-static wrist strap. For safety, use a 1 Meg ohm resistive cord connected to a grounded part of the equipment frame.

- If you don't have a wrist strap, touch an un-painted, grounded, part of the equipment frame. Keep touching the frame to prevent static build-up. Be sure not to touch any electrically live parts at the same time.

- Tools which come in contact with the PC board must be either conductive, anti-static or static-dissipative.

- Remove the PC board from the static-shielding bag and place it directly into the equipment. Don't set the PC board on or near paper, plastic or cloth which could have a static charge. If the PC board can't be installed immediately, put it back in the static-shielding bag.

- If the PC board uses protective shorting jumpers, don't remove them until installation is complete.

- If you return a PC board to The Lincoln Electric Company for credit, it must be in the static-shielding bag. This will prevent further damage and allow proper failure analysis.

4. Test the machine to determine if the failure symptom has been corrected by the replacement PC board.

NOTE: It is desirable to have a spare (known good) PC board available for PC board troubleshooting.

NOTE: Allow the machine to heat up so that all electrical components can reach their operating temperature.

5. Remove the replacement PC board and substitute it with the original PC board to recreate the original problem.
   a. If the original problem does not reappear by substituting the original board, then the PC board was not the problem. Continue to look for bad connections in the control wiring harness, junction blocks, and terminal strips.
   b. If the original problem is recreated by the substitution of the original board, then the PC board was the problem. Reinstall the replacement PC board and test the machine.
6. Always indicate that this procedure was followed when warranty reports are to be submitted.

NOTE: Following this procedure and writing on the warranty report, "INSTALLED AND SWITCHED PC BOARDS TO VERIFY PROBLEM," will help avoid denial of legitimate PC board warranty claims.

Return to Section TOC
Return to Master TOC

Return to Section TOC
Return to Master TOC

Troubleshooting Guide – See Wiring Diagrams for location of specified components. See Wiring Diagrams for troubleshooting of specific circuits.

Observe Safety Guidelines detailed in the beginning of this manual.

PROBLEMS (SYMPTOMS)	POSSIBLE AREAS OF MISADJUSTMENT(S)	RECOMMENDED COURSE OF ACTION
FEEDING PROBLEMS		

NOTE: Many options and possible option combinations are available for the LN-25™. In many cases, it is best to disconnect the options and test the LN-25™ in its "basic" form. In this manner, many possible faulty circuits can be isolated and/or eliminated from the troubleshooting procedure.

Major physical or electrical damage is evident when the box cover is removed.	1. Contact Lincoln Electric Service Department 1-888-935-3877.	
When gun trigger is pulled, there is no wire feed. **NOTE:** On codes above 10100, the motor leads (541 & 539) are in Control Board Connector J4, pins 13 & 14.	1. Check to see if the drive rolls are turning when the gun trigger is pulled. If the drive rolls are turning, then check for a mechanical restriction in the wire feed path. 2. If the drive rolls do not turn, then check to ensure the power source is on and an open circuit voltage (OCV) is present at the weld terminals. 3. Make sure the LN-25™ work clip is connected to the work piece or work terminal. 4. Ensure the LN-25™ polarity switch matches the electrode polarity. 5. Check if the jumper plug on the control board or contactor board (if used) is loose or missing. 6. Make certain the power source open circuit voltage is above 15 VDC but not more than 110 VDC. 7. Check if the gun trigger is faulty. Repair or replace. 8. On "older" control boards, check the 1/8 amp fuse. If "blown", the gun may be faulty.	1. With the gun trigger circuit activated and the mode switch in the CV position, check for the presence of 2 to 23 VDC at leads 539 to 541. This is the normal range for armature voltage, which is dependent on the wire speed setting. 2. If the normal armature voltage is present at leads 539 to 541, then the motor or motor brushes may be faulty. Check or replace. 3. If the correct armature voltage is missing, then remove any option plugs that may be connected to J3 on the control board. Install the jumper plug into the J3 receptacle. If the problem is solved, then the option board may be faulty. 4. Check the wire speed control, range switch and associated wiring to the control board. 5. If the correct armature voltage is still not present at leads 539 to 541, then the control board may be faulty. Replace.

⚠ CAUTION

If for any reason you do not understand the test procedures or are unable to perform the tests/repairs safely, contact the Lincoln Electric Service Department for technical troubleshooting assistance before you proceed. Call 1-888-935-3877.

Return to Section TOC
Return to Master TOC

Troubleshooting Guide – See Wiring Diagrams for location of specified components. See Wiring Diagrams for troubleshooting of specific circuits.

Observe Safety Guidelines detailed in the beginning of this manual.

PROBLEMS (SYMPTOMS)	POSSIBLE AREAS OF MISADJUSTMENT(S)	RECOMMENDED COURSE OF ACTION
FEEDING PROBLEMS (Continued)		
The wire feeds for a short period of time but then stops feeding. When the gun trigger is released and then retriggered, the wire resumes feeding but soon stops again.	1. The drive motor may be overloaded. Check the wire feeding path for mechanical restrictions. 2. While welding make certain the power source arc voltage is staying above 15 VDC. The feeder will not function properly on less than 15 VDC.	1. Check the motor armature current through either of the armature leads (539 or 541). A typical value is 4 amps DC. 2. If 5 amps or less is indicated and the armature voltage is being disabled by the control board, then the control board may be faulty. Replace. 3. If more than 5 amps is indicated, then the motor is drawing too much armature current. Check and or replace the motor brushes. 4. The motor or gearbox may be faulty. Replace.
The wire stops or stubs while welding. **NOTE:** On codes above 10100, the motor leads (541 & 539) are in Control Board Connector J4, pins 13 & 14.	1. If the LN-25™ is connected to a constant current power source, the arc voltage may be "dipping" below the 15 VDC threshold that is essential for proper LN-25™ operation. 2. Try connecting the LN-25™ to a constant voltage power source or a flatter slope output. 3. Make sure the wire feed mode switch (S3) is in the correct position for the power source being used, and proper speed setting is used for the procedure. 4. Check for mechanical restrictions in the wire feed path.	1. Monitor the motor armature voltage (leads 539 to 541). Normal range is 2 to 23 VDC. If the armature voltage is proper, then check or replace the motor brushes. 2. If the motor armature voltage is not correct, then the control board may be faulty. Replace.

⚠ CAUTION

If for any reason you do not understand the test procedures or are unable to perform the tests/repairs safely, contact the Lincoln Electric Service Department for technical troubleshooting assistance before you proceed. Call 1-888-935-3877.

Return to Section TOC
Return to Master TOC

Troubleshooting Guide – See Wiring Diagrams for location of specified components. See Wiring Diagrams for troubleshooting of specific circuits.

Observe Safety Guidelines detailed in the beginning of this manual.

PROBLEMS (SYMPTOMS)	POSSIBLE AREAS OF MISADJUSTMENT(S)	RECOMMENDED COURSE OF ACTION
FUNCTION PROBLEMS (Continued)		
The wire feed motor runs at a constant speed with no control. **NOTE:** Loss of tach feedback may result in MAX speed or a motor voltage of approx. 14VDC depending on the Control Board being used.	1. Make sure the mode switch (S3) is in the CV mode. 2. Make sure the wire speed control and the wire speed range switch (S2) are set correctly.	1. Perform the ***Hall Effect Module Test.*** 2. Perform the ***Wire Drive Motor Test.*** 3. The control board may be faulty. Replace.
The gas solenoid valve will not function.	1. Make sure the LN-25™ is equipped with a gas solenoid valve and properly connected. 2. Make sure the gas supply is adequate and the gas hoses are not loose or kinked. NOTE: Control Boards L12253-[ ] or higher do not use a Gas Solenoid PC Board.	1a. Perform the ***Solenoid PC Board and Gas Solenoid Valve Test*** **NOTE:** Test is code specific. Codes above 10100 may or may not have a Solenoid PC Board. 2. If a K434-1 gas flow timer kit is installed in the unit, disconnect and plug in the timer jumper plug. If the gas solenoid functions, then replace the K434-1 kit. 3. The contactor board or remote control board (if used) may be faulty. 4. The control board may be faulty. Replace.
The contactor does not function.	1. Make certain the LN-25™ is equipped with a contactor and properly connected. 2. Check the connections to the contactor PC board. **NOTE:** Control Boards L12253-[ ] or higher do not use a Contactor PC Board.	1. Perform the ***Contactor Test.*** **NOTE:** Test is code specific. Codes above 10100 may or may not have a Contactor PC Board. 2. The Contactor PC board or the Control Board may be faulty. Replace.

⚠ CAUTION

If for any reason you do not understand the test procedures or are unable to perform the tests/repairs safely, contact the Lincoln Electric Service Department for technical troubleshooting assistance before you proceed. Call 1-888-935-3877.

Return to Section TOC
Return to Master TOC

GAS SOLENOID VALVE AND SOLENOID PC BOARD TEST

(FOR CODES BELOW 10500 ONLY)

⚠ WARNING

Service and repair should be performed by only Lincoln Electric factory trained personnel. Unauthorized repairs performed on this equipment may result in danger to the technician or machine operator and will invalidate your factory warranty. For your safety and to avoid electrical shock, please observe all safety notes and precautions detailed throughout this manual.

If for any reason you do not understand the test procedures or are unable to perform the test/repairs safely, contact the Lincoln Electric Service Department for electrical troubleshooting assistance before you proceed. Call 1-888-935-3877.

TEST DESCRIPTION

This test will determine if the gas solenoid valve or the solenoid PC board are functional.

MATERIALS NEEDED

Phillips Head Screwdriver
12 VDC Supply
Volt/Ohmmeter
DC Voltage Source (25 to 100 VDC)

GAS SOLENOID VALVE AND SOLENOID PC BOARD TEST
(continued)

FIGURE F.1 – CONTROL BOX COVER REMOVAL.

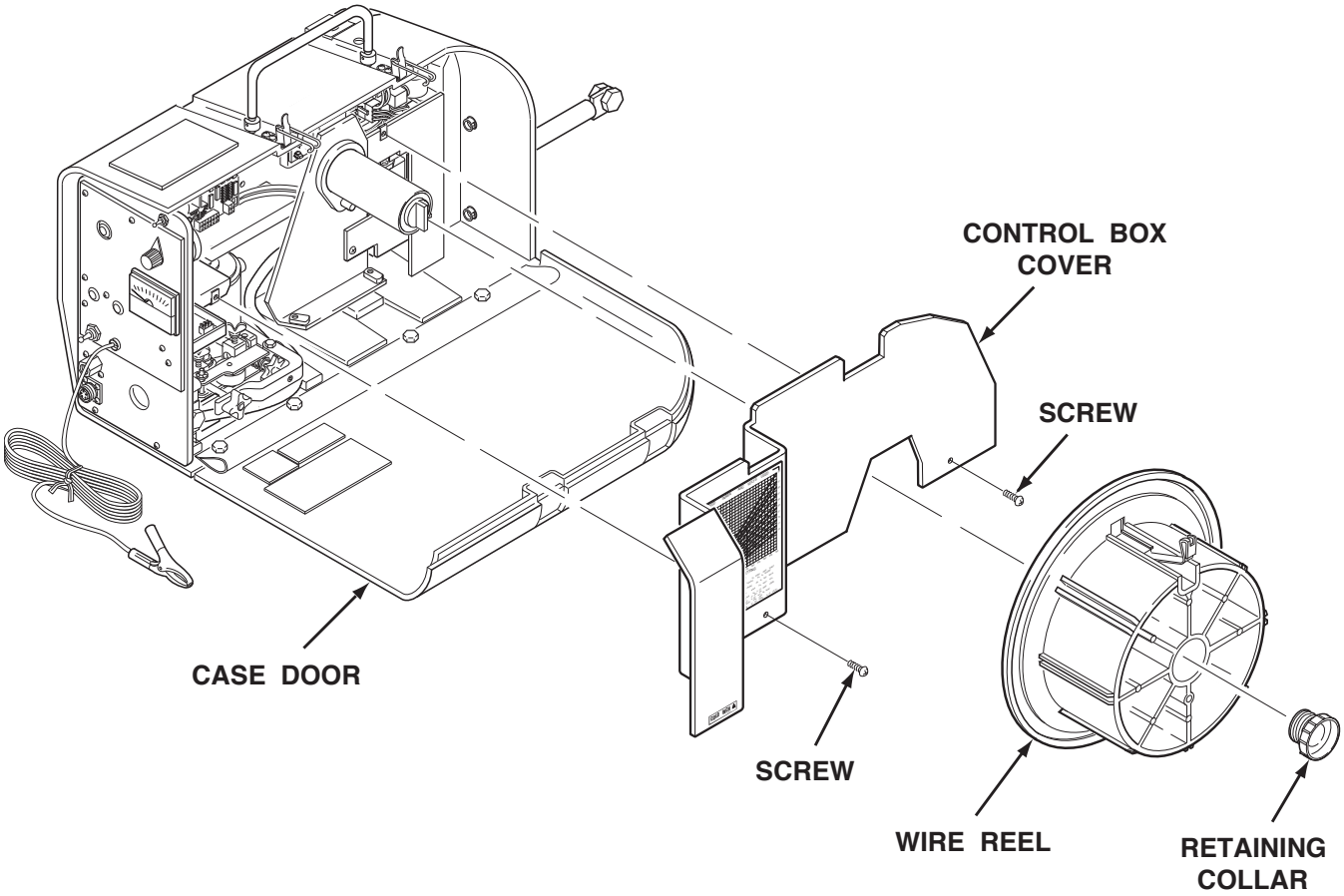

TEST PROCEDURE

GAS SOLENOID VALVE

1. Open the case door. Remove the wire reel by removing the retaining collar. See Figure F.1.
2. Remove the screws holding the control box cover in place and remove the control box cover. See Figure F.1.

Return to Section TOC
Return to Master TOC

Return to Section TOC
Return to Master TOC

GAS SOLENOID VALVE AND SOLENOID PC BOARD TEST
(continued)

FIGURE F.2 – SOLENOID LEADS.

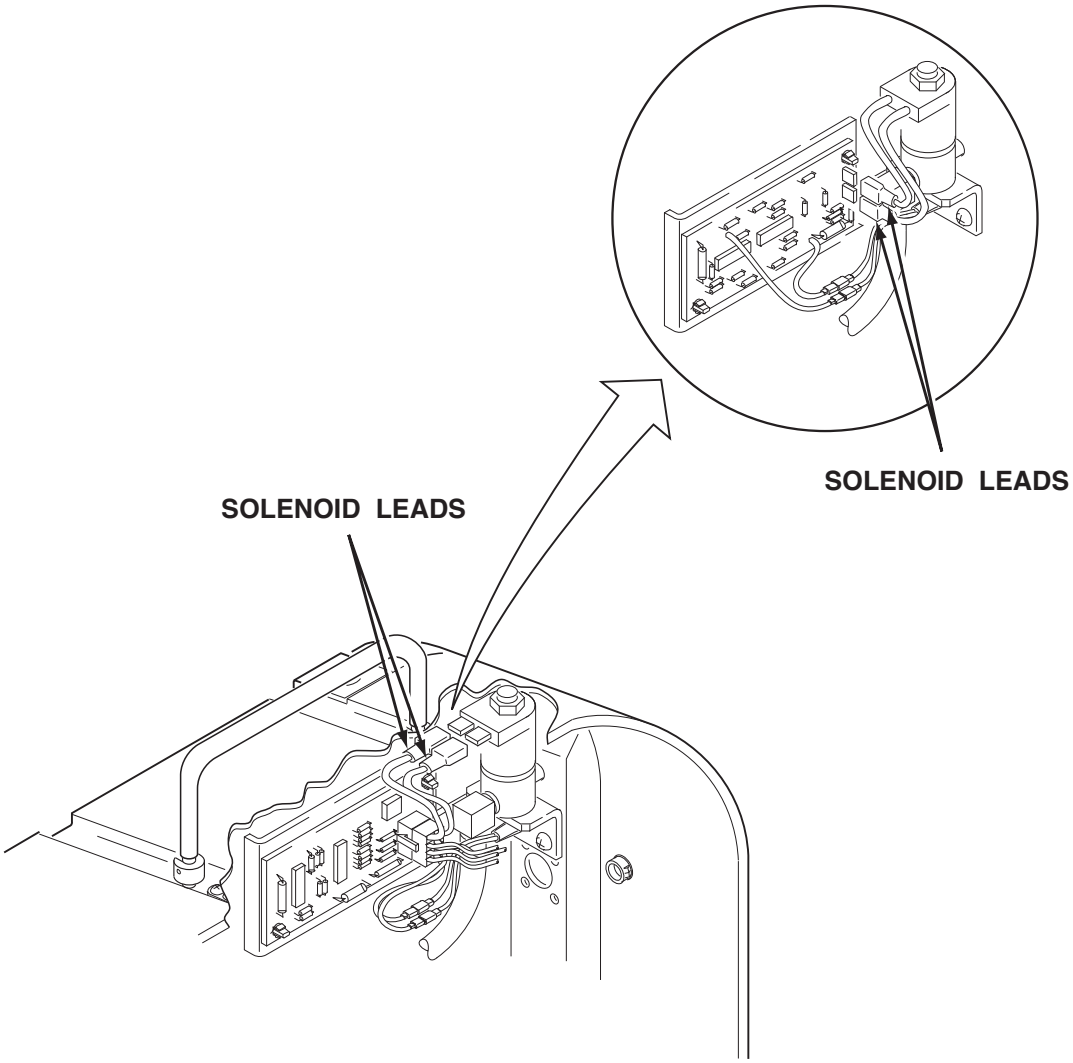

3. Locate and remove the two solenoid leads from the solenoid valve (For codes 9812 and below, remove the two leads from the Solenoid PC Board). See Figure F.2.
4. Make sure the gas supply for the solenoid is hooked up, and then apply 12 VDC to the gas solenoid.
5. If the solenoid activates and allows gas flow, then the solenoid valve is good.

NOTE: There should not be any gas flow until the solenoid is activated.

6. If the solenoid does not activate and allow gas to flow, then the solenoid is faulty. Replace.
7. The normal solenoid resistance is approximately 20 to 27 ohms.

GAS SOLENOID VALVE AND SOLENOID PC BOARD TEST
(continued)

FIGURE F.3 – APPLIED VOLTAGE POLARITY.

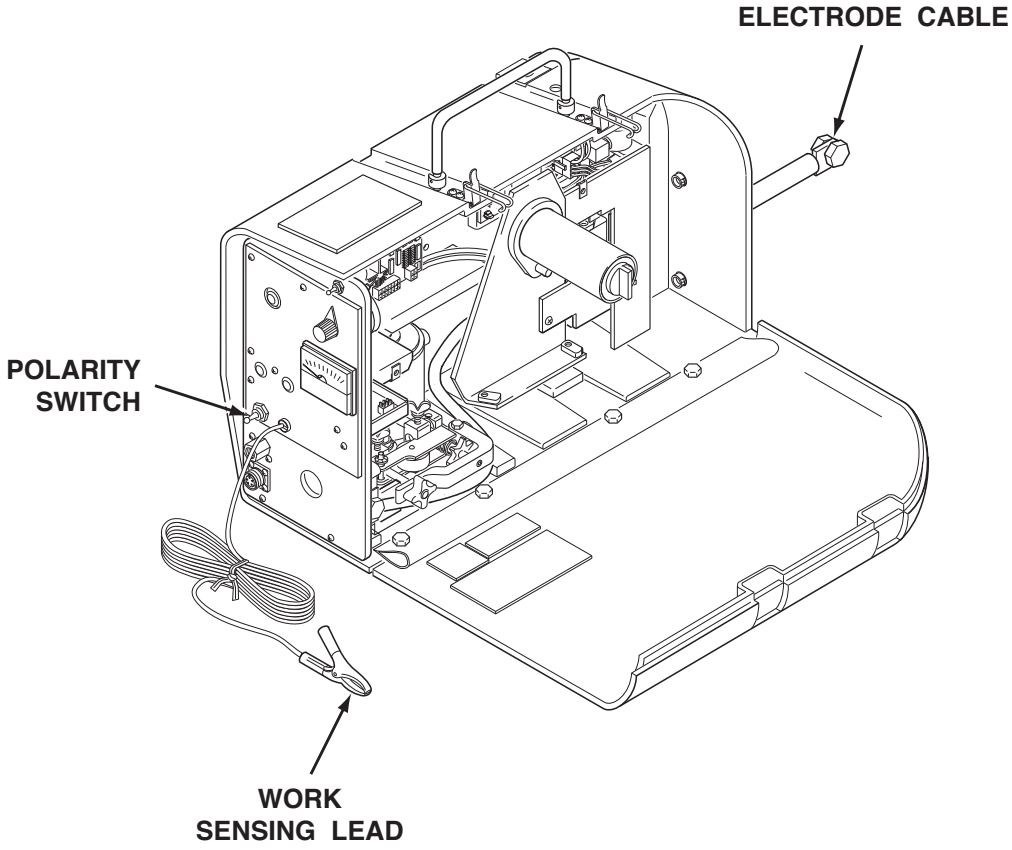

SOLENOID PC BOARD

1. Apply at least 25 VDC but no more than 100 VDC to the LN-25™ from the electrode cable to the work sensing lead. Make sure the polarity switch is set to match the polarity of the electrode cable. For example, if the electrode cable is positive and the work sensing lead is negative, set the polarity switch to positive. See Figure F.3.

Return to Section TOC
Return to Master TOC

GAS SOLENOID VALVE AND SOLENOID PC BOARD TEST *(continued)*

FIGURE F.4 – PC BOARD FOR K430-1 GAS SOLENOID KIT.

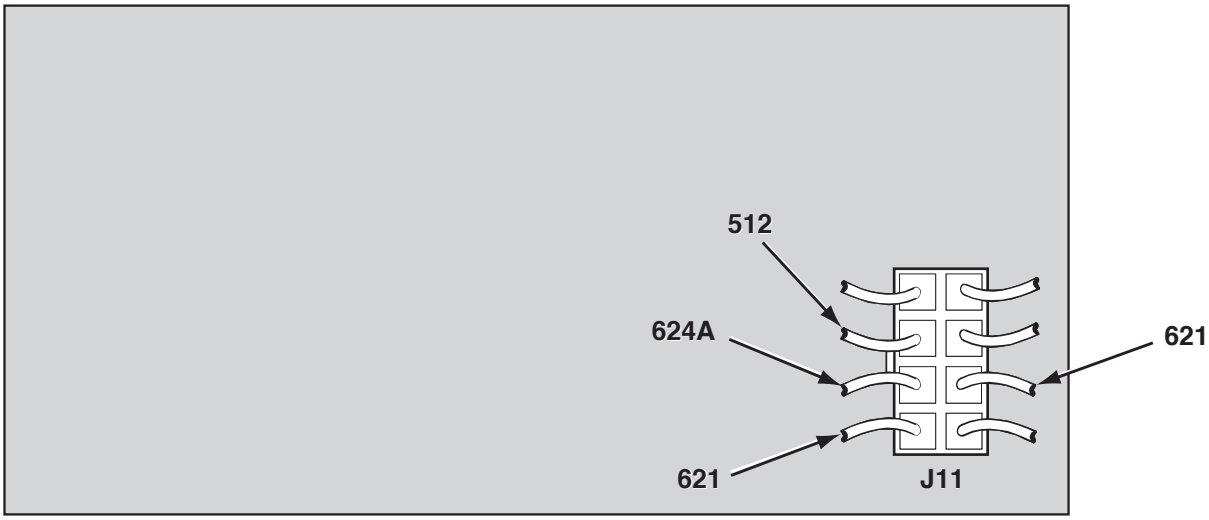

PC BOARD FOR K430 GAS SOLENOID KIT.

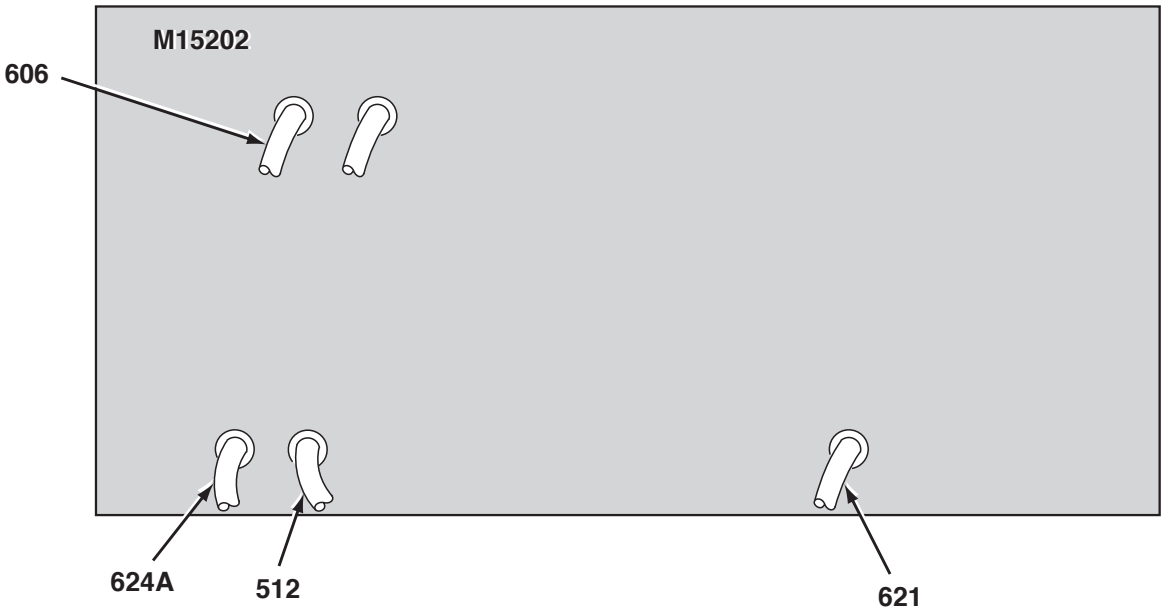

2. Check for the presence of the DC voltage applied from lead 624A(+) to lead 621(-). See Figure F.4
3. Check for the presence of 12 VDC from lead 512(+) to lead 621(-).
4. Check for the presence of 10 VDC from lead 606(+) to lead 621(-). When the LN-25™ trigger circuit is activated, the voltage should drop to about 1 VDC.
5. If the above voltage readings are good and the solenoid valve is functional, the Solenoid PC Board may be faulty.
6. If the above voltage checks are not correct, the control board, contactor board (if used), remote control board (if used) and/or wiring harness may be faulty. Refer to the wiring diagrams in the Electrical Diagrams Section.

   The appropriate jumper plugs may be used to isolate and check suspect contactor or remote control boards.

Return to Section TOC
Return to Master TOC

NOTES

F-12

Return to Section TOC
Return to Master TOC
Return to Section TOC
Return to Master TOC
Return to Section TOC
Return to Master TOC
Return to Section TOC
Return to Master TOC

Return to Section TOC
Return to Master TOC

GAS SOLENOID VALVE AND CONTROL PC BOARD TEST

(FOR CODES ABOVE 10500 ONLY)

⚠ WARNING

Service and repair should be performed by only Lincoln Electric factory trained personnel. Unauthorized repairs performed on this equipment may result in danger to the technician or machine operator and will invalidate your factory warranty. For your safety and to avoid electrical shock, please observe all safety notes and precautions detailed throughout this manual.

If for any reason you do not understand the test procedures or are unable to perform the test/repairs safely, contact the Lincoln Electric Service Department for electrical troubleshooting assistance before you proceed,. Call 1-888-935-3877.

TEST DESCRIPTION

This test will determine if the gas solenoid valve or the control PC board valve actuation circuitry is functional.

MATERIALS NEEDED

Phillips Head Screwdriver
12 VDC Supply
Volt/Ohmmeter
DC Voltage Source (25 to 100 VDC)

NOTE: LN-25™ units with the L12253-[ ] Control Board do not use a Contactor PC Board. Codes above 10100 may have been upgraded to use this Control Board and must be tested accordingly.

GAS SOLENOID VALVE AND CONTROL PC BOARD TEST

(FOR CODES ABOVE 10500 ONLY) *(continued)*

FIGURE F.5 – CONTROL BOX COVER REMOVAL.

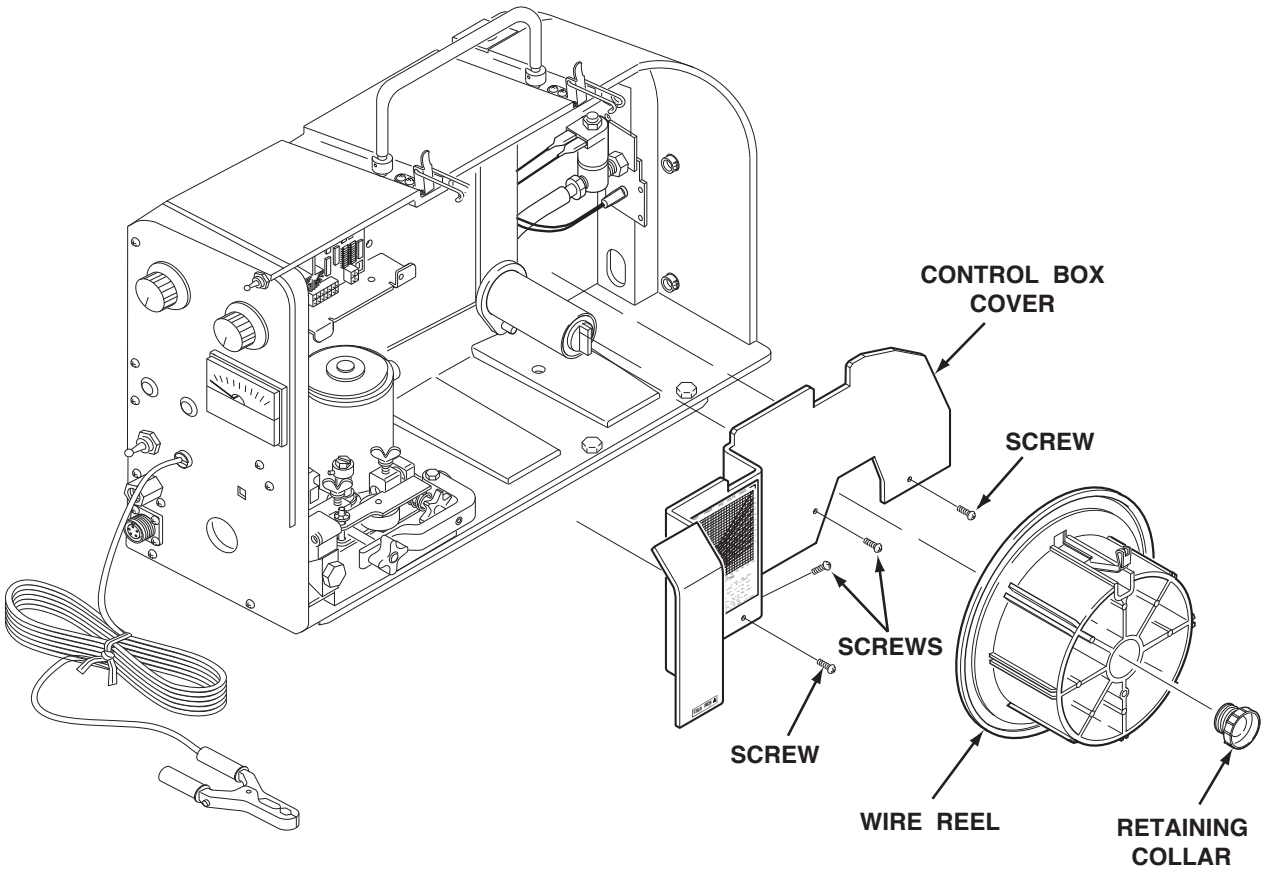

TEST PROCEDURE

GAS SOLENOID VALVE

1. Open the case door. Remove the wire reel by removing the retaining collar. See Figure F.5.
2. Remove the screws holding the control box cover in place and remove the control box cover. See Figure F.5

LINCOLN® ELECTRIC

Return to Section TOC
Return to Master TOC

GAS SOLENOID VALVE AND CONTROL PC BOARD TEST

(FOR CODES ABOVE 10500 ONLY) *(continued)*

FIGURE F.6. – SOLENOID LEADS.

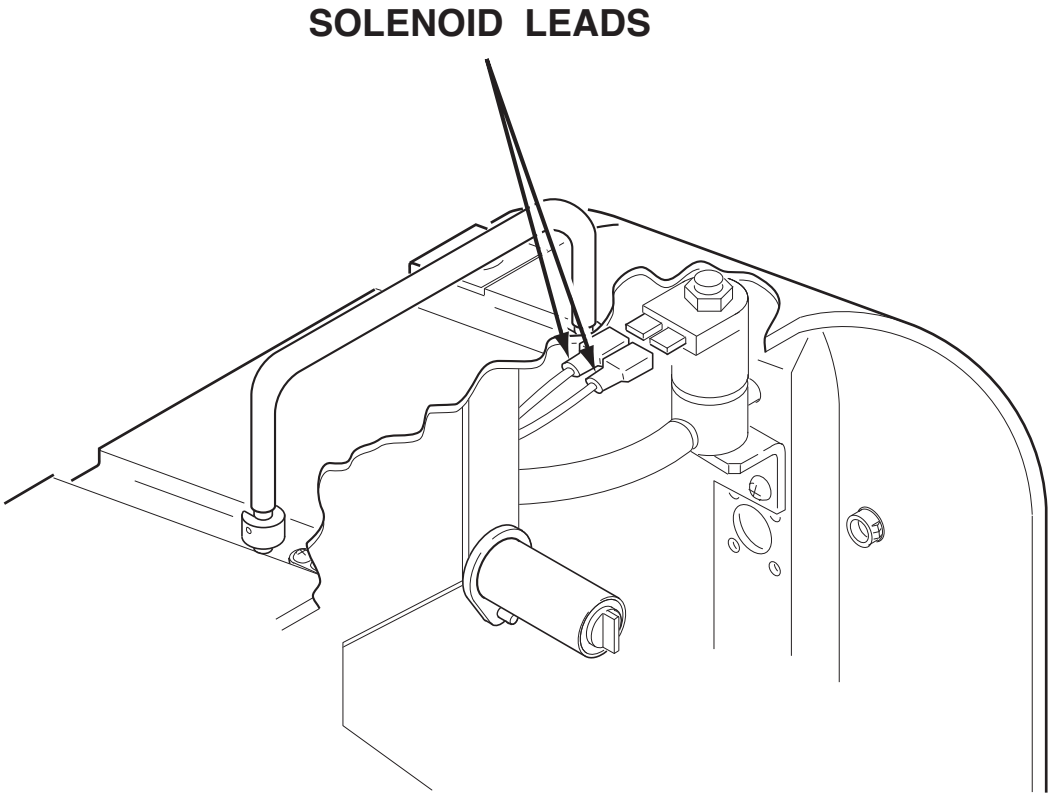

3. Locate and remove the two solenoid leads #690 and #691 from the solenoid valve. See Figure F.6.
4. Make sure the gas supply for the solenoid is hooked up, and then apply 12 VDC to the gas solenoid.
5. If the solenoid activates and allows gas flow, then the solenoid valve is good.

NOTE: There should not be any gas flow until the solenoid is activated.

6. If the solenoid does not activate and allow gas to flow, then the solenoid is faulty. Replace.
7. The normal solenoid resistance is approximately 20 to 27 ohms.

Return to Section TOC
Return to Master TOC

GAS SOLENOID VALVE AND CONTROL PC BOARD TEST

(FOR CODES ABOVE 10500 ONLY) *(continued)*

FIGURE F.7. – APPLIED VOLTAGE POLARITY.

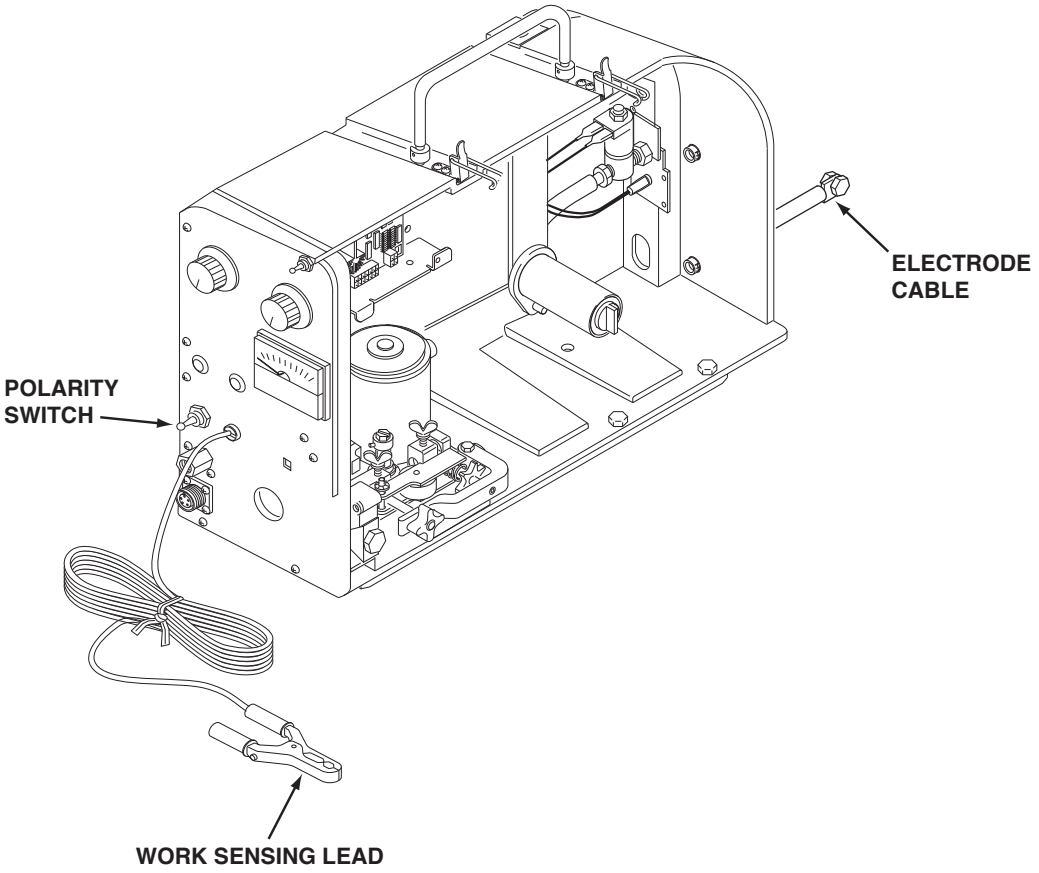

CONTROL PC BOARD SOLENOID CIRCUITRY TEST

1. Apply at least 25 VDC but no more than 100 VDC to the LN-25™ from the electrode cable to the work sensing lead. Make sure the polarity switch is set to match the polarity of the electrode cable. For example, if the electrode cable is positive and the work sensing lead is negative, set the polarity switch to positive. See Figure F.7.

Return to Section TOC
Return to Master TOC

GAS SOLENOID VALVE AND CONTROL PC BOARD TEST

(FOR CODES ABOVE 10500 ONLY) *(continued)*

FIGURE F.8. – CONTROL PC BOARD.

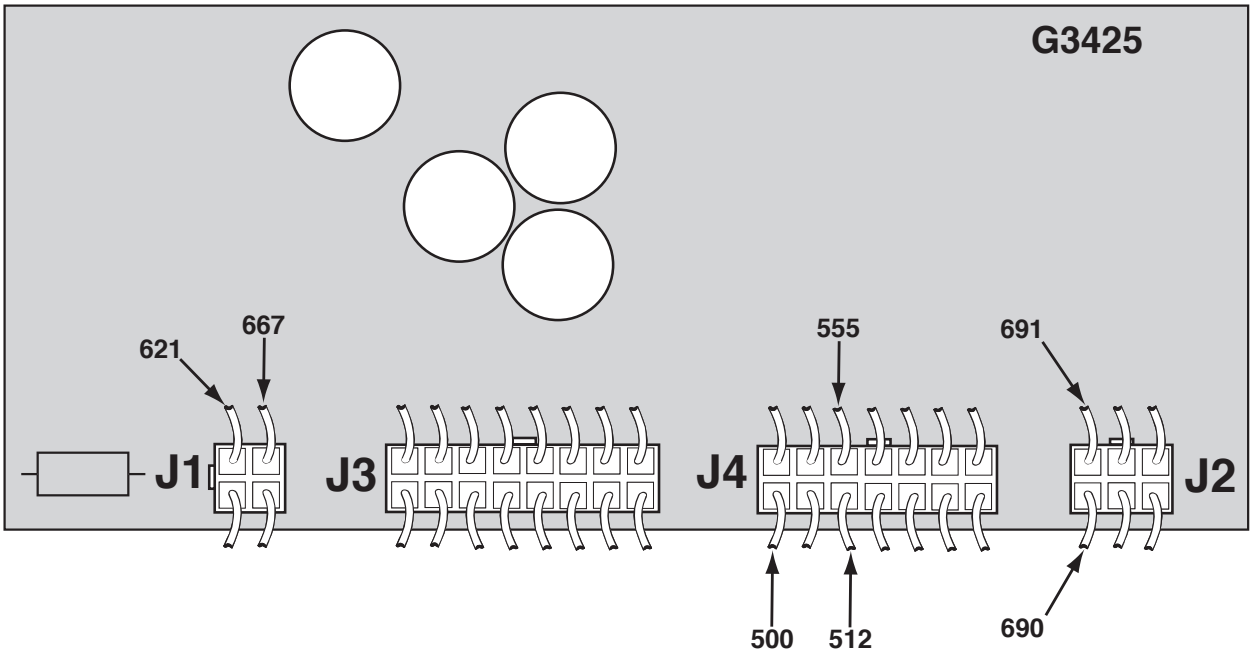

2. Check for the presence of the DC voltage applied from plug J1 pin 1 (667+) to plug J1 pin 3 621(-). See Figure F.8.or F.8.a.

3. Check for the presence of 5 to 6 VDC from lead 690(+) to lead 691(-) at solenoid valve. The LN-25™ trigger circuit must be activated or the purge button must be pressed.

4. If the above voltage reading is not correct at the solenoid valve, check for 5 to 6VDC at plug J2 pin 3 lead 690(+) & pin 6 lead 691 (-). See Figure F.8.

5. If the above voltage check is not correct, the control board may be faulty. Refer to the wiring diagrams in the Electrical Diagrams Section.

   The appropriate jumper plugs may be used to isolate and check suspect contactor or remote control boards

NOTE: Machines with Codes above 10100 that have been upgraged to the L12253-[ ] Control boardhave thesme connection points ad shown in Figure F.8 for the supply and solenoid voltages

Return to Section TOC
Return to Master TOC

NOTES

F-18

Return to Section TOC
Return to Master TOC
Return to Section TOC
Return to Master TOC
Return to Section TOC
Return to Master TOC
Return to Section TOC
Return to Master TOC

Return to Section TOC
Return to Master TOC

HALL EFFECT MODULE TEST

⚠ WARNING

Service and repair should be performed by only Lincoln Electric factory trained personnel. Unauthorized repairs performed on this equipment may result in danger to the technician or machine operator and will invalidate your factory warranty. For your safety and to avoid electrical shock, please observe all safety notes and precautions detailed throughout this manual.

If for any reason you do not understand the test procedures or are unable to perform the test/repairs safely, contact the Lincoln Electric Service Department for electrical troubleshooting assistance before you proceed. Call 1-888-935-3877.

TEST DESCRIPTION

This test will determine if the hall effect module is functioning correctly.

MATERIALS NEEDED

Phillips Head Screwdriver
Volt/Ohmmeter
DC Voltage Source (25 to 100 VDC)

HALL EFFECT MODULE TEST *(continued)*

FIGURE F.9 – CONTROL PC BOARD (CODES 10148 THRU 10500).

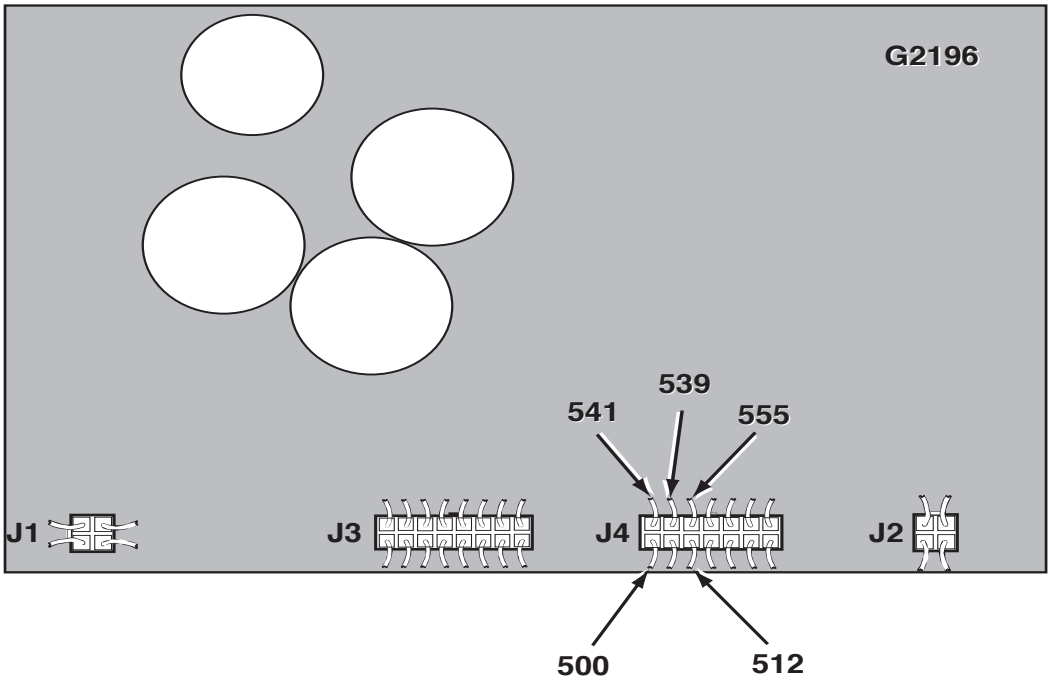

FIGURE F.10 – CONTROL PC BOARD (CODES 9812 AND BELOW).

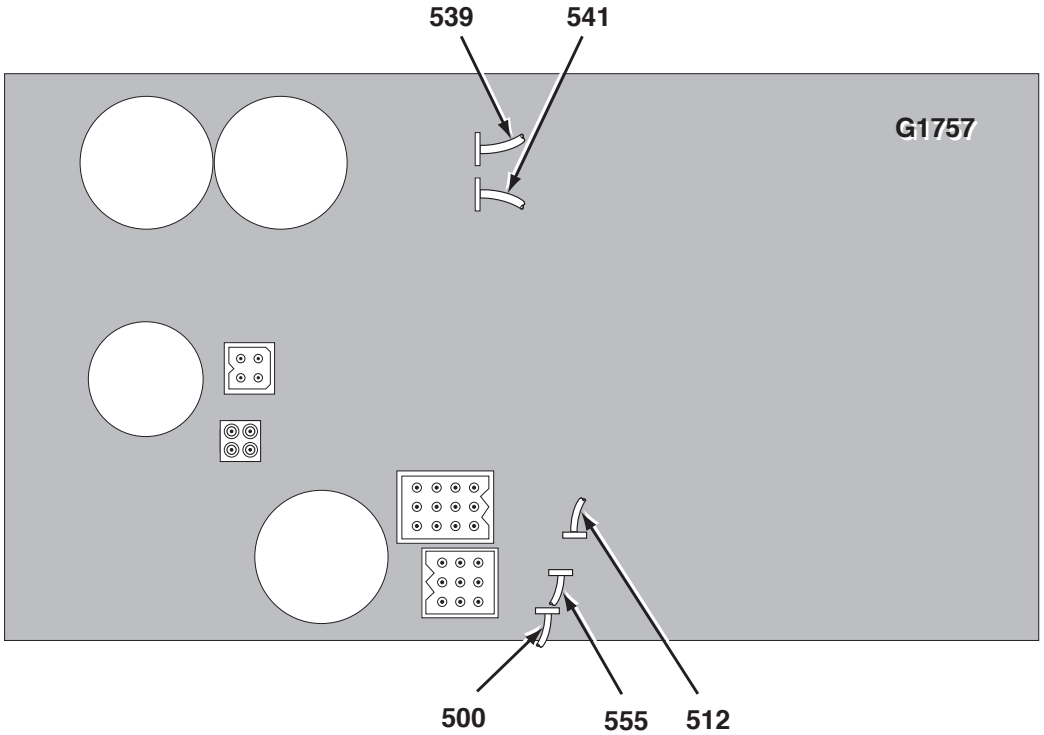

TEST PROCEDURE

1. Open the case door. Remove the wire ree` by removing the retaining collar. ***See Figure F.5.***
2. Remove the screws holding the control box cover in place and remoe` the control box cover. ***See Figure F.5.***
3. Locate the three hall effet` leads 500, 512 and 555 incorporated in plug J4 o` the Control Board for` codes 9812 and below, the leads connect directly to the Control Board). o` ot` disconnect the leads from the board. ee` Figure F.9, or F.10. ***See Figure F.11*** for codes above .....

LINCOLN® ELECTRIC

Return to Section TOC
Return to Master TOC

HALL EFFECT MODULE TEST *(continued)*

FIGURE F.11 CONTROL PC BOARD (CODES ABOVE 10500)

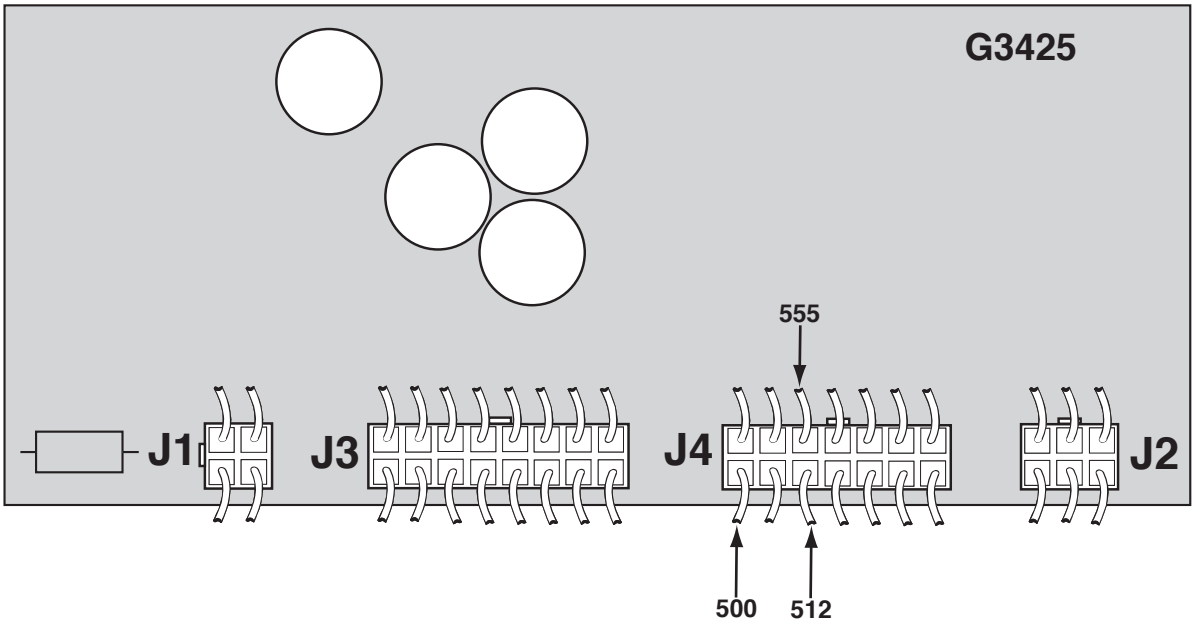

4. Apply at least 25 VDC but no more than 100 VDC to the LN-25™ from the electrode cable to the work sensing lead. Observe polarity and set polarity switch.

5. Check for the presence of 12 VDC from lead 512(+) to lead 500(-). If the 12 VDC is not present or low, the control board may be faulty. See Figure F.11or F.11.a.

6. Activate the LN-25™ trigger circuit, make sure the drive motor is running and check for the presence of approximately 6.0 VDC from lead 555(+) to lead 500(-). The value of 6.0 VDC represents the correct feedback voltage from the hall effect device to the control board.

7. f the oe ote re ot orret the h effet ee m ee to e te ee the ***Maintenance Section*** or ree ee the ***Drive Motor and Gearbox Replacement and Access to Hall Effect Module procedure.***

NOTE: Machines with L12253-[ ] PC Boards react differently to loss of feedback. Instead of running full speed, the motor voltage is held to approximately 14VDC.

FIGURE F.11.a CONTROL PC BOARD (CODES ABOVE 10500)

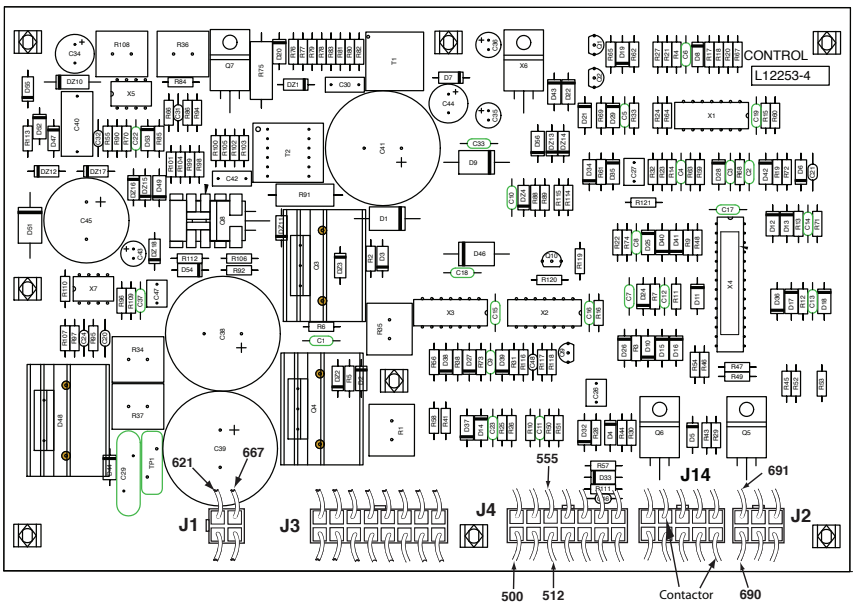

Return to Section TOC
Return to Master TOC

NOTES

F-22

Return to Section TOC
Return to Master TOC

Return to Section TOC
Return to Master TOC

Return to Section TOC
Return to Master TOC

Return to Section TOC
Return to Master TOC

Return to Section TOC
Return to Master TOC

WIRE DRIVE MOTOR TEST

⚠ WARNING

Service and repair should be performed by only Lincoln Electric factory trained personnel. Unauthorized repairs performed on this equipment may result in danger to the technician or machine operator and will invalidate your factory warranty. For your safety and to avoid electrical shock, please observe all safety notes and precautions detailed throughout this manual.

If for any reason you do not understand the test procedures or are unable to perform the test/repairs safely, contact the Lincoln Electric Service Department for electrical troubleshooting assistance before you proceed. Call 1-888-935-3877.

TEST DESCRIPTION

The following procedure will determine if the wire drive motor is functional.

MATERIALS NEEDED

Phillips Head Screwdriver
Voltage Source (variable 2 to 23 VDC)
Volt/Ohmmeter

Return to Section TOC
Return to Master TOC

FIGURE F.12 – HALL EFFECT MODULE AND DRIVE MOTOR LEADS IN-LINE CONNECTORS.

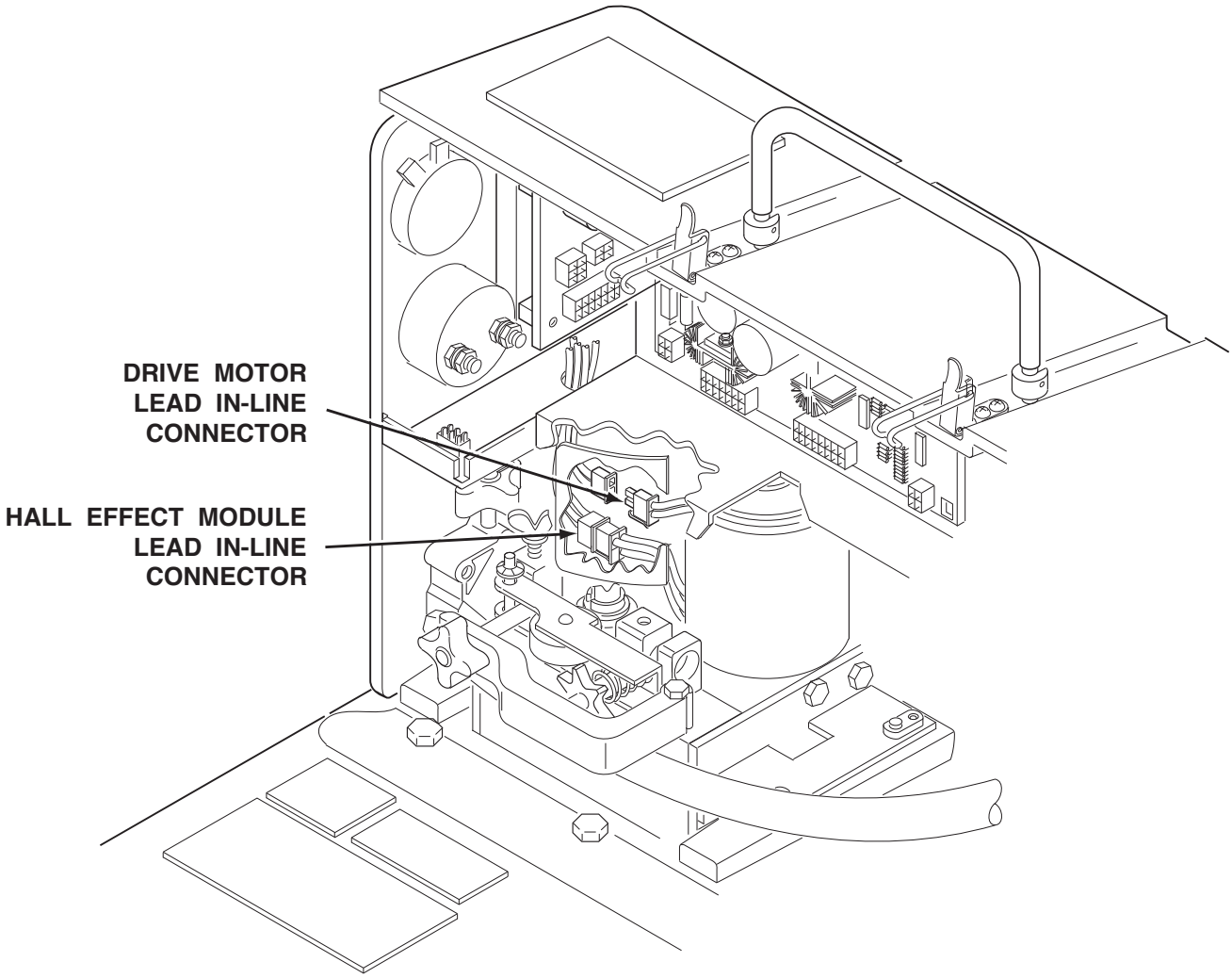

TEST PROCEDURE

1. Open the case door. Remove the wire reel by removing the retaining collar. ***See Figure F.5.***
2. Remove the screws holding the control box cover in place and remove the control box cover. ***See Figure F.5.***
3. For codes 10148 and above, separate the in-line connector (containing the drive motor leads) located behind the mylar insulation. Be sure to identify the correct in-line connector. There is also an in-line connector for the hall effect module behind the mylar insulation. See Figure F.12.

   For codes 9812 and below, remove the two motor leads 539(white) and 541(black) from the control PC board. ***See Figure F.10.***
4. Apply a variable DC voltage to the drive motor from lead 541(black)(+) to lead 539(white)(-).
5. When the supply voltage is varied from 2 to 23 VDC, the drive motor speed (RPM) should vary accordingly. If the motor does not run or vary in speed, the motor, gearbox or motor brushes may be faulty. Check or replace.
6. Check the resistance between each of the motor leads [541(black) and 539(white)] and the motor case. The resistance should be very high (at least 500,000 ohms). If the resistance is low, the motor is grounded to the motor case and should be replaced.

Return to Section TOC
Return to Master TOC

CONTACTOR & CONTACTOR PC BOARD TEST

⚠ WARNING

Service and repair should be performed by only Lincoln Electric factory trained personnel. Unauthorized repairs performed on this equipment may result in danger to the technician or machine operator and will invalidate your factory warranty. For your safety and to avoid electrical shock, please observe all safety notes and precautions detailed throughout this manual.

If for any reason you do not understand the test procedures or are unable to perform the test/repairs safely, contact the Lincoln Electric Service Department for electrical troubleshooting assistance before you proceed. Call 1-888-935-3877.

TEST DESCRIPTION

The following test will determine if the contactor is functional.

MATERIALS NEEDED

Phillips Head Screwdriver
12 VDC Supply
Volt/Ohmmeter

NOTE: LN-25™ units with the L12253-[ ] Control Board do not use a Contactor PC Board. Codes above 10100 may have been upgraded to use this Control Board and must be tested accordingly.

CONTACTOR & CONTACTOR PC BOARD TEST *(continued)*

FIGURE F.13. – CONTACTOR LEAD IN-LINE CONNECTORS.

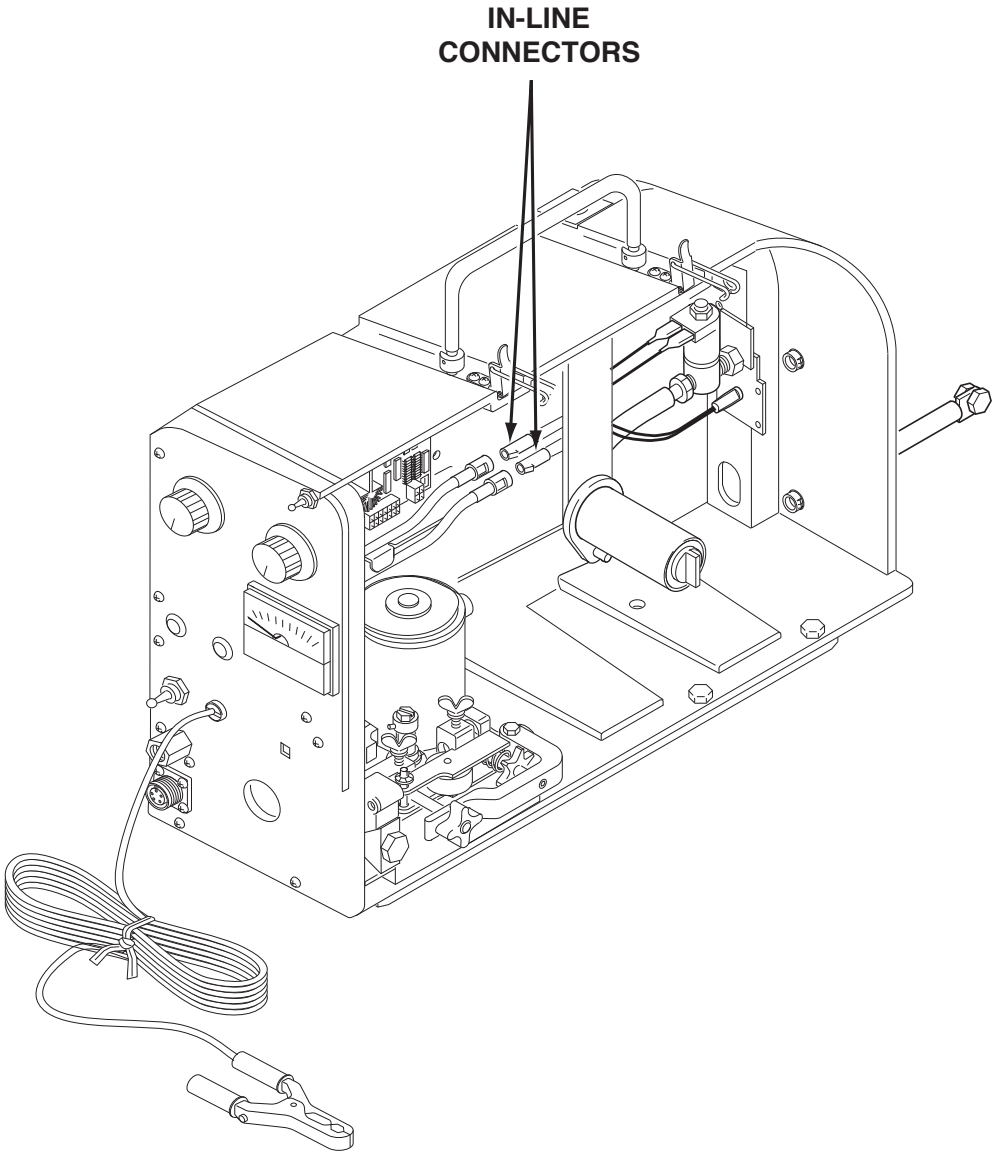

CONTACTOR TEST PROCEDURE

1. Open the case door. Remove the wire reel by removing the retaining collar. ***See Figure F.5.***
2. Remove the screws holding the control box cover in place and remove the control box cover. ***See Figure F.5.***
3. Separate the two in-line connectors located behind the reel stand assembly. See Figure F.13. For codes 9812 and below, remove the two contactor coil leads from the contactor PC board. ***See Figure F.14.***

Return to Section TOC
Return to Master TOC

CONTACTOR & CONTACTOR PC BOARD TEST *(continued)*

FIGURE F.14 – CONTACTOR PC BOARDS

CODES 9812 AND BELOW

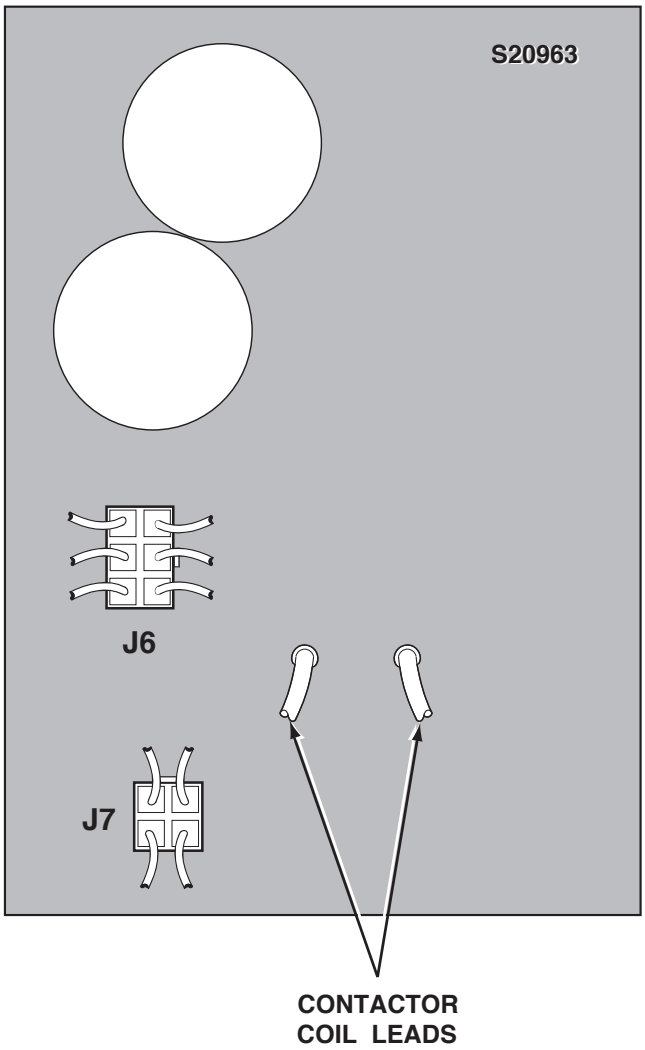

CODES BELOW 10500

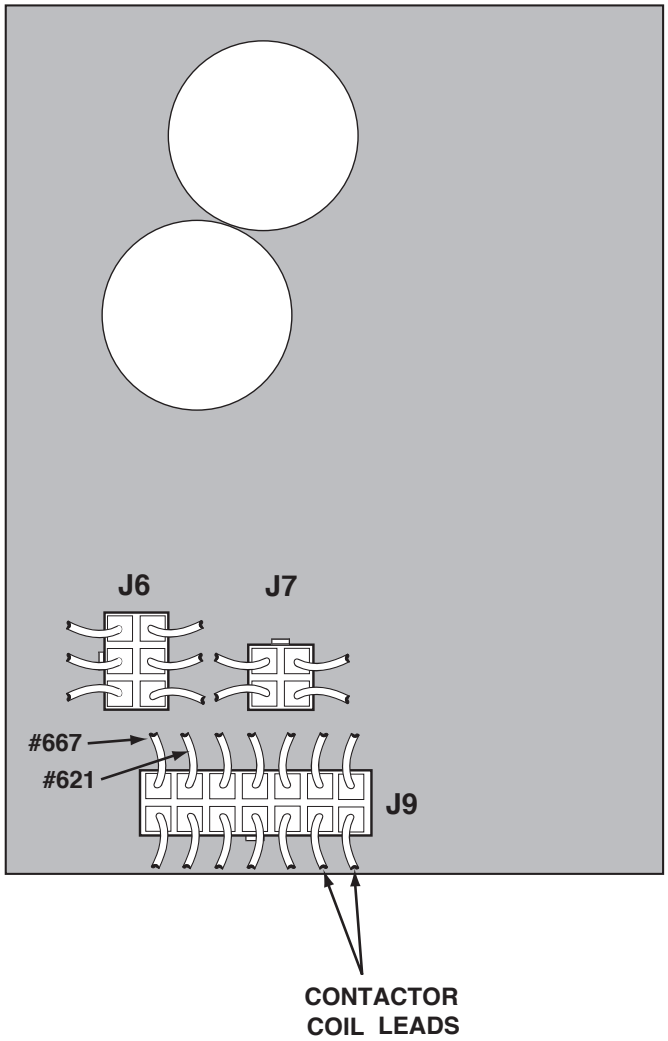

4. Apply 12 VDC to the contactor coil leads.

⚠ CAUTION

Do not leave the 12 VDC applied to the contactor coil for a prolonged period of time (15 seconds maximum). Damage to contactor may result.

5. If the contactor does not activate when the 12 VDC is applied, the contactor is faulty. Replace.

6. If the contactor activates when the 12 VDC is applied, check the resistance between the two large terminal studs with the contactor activated. The resistance should be very low (0 to 1 ohm).

7. If the resistance is “high” or “open” between the two large terminal studs when the contactor is activated, the contactor is faulty. Replace.

8. If the contactor activates and the resistance between the terminals is low when the 12 VDC is applied, the contactor is good.

NOTE: When the contactor is not activated, the resistance between the terminals should be very high (infinite). If the resistance is always low, the contacts are “stuck” and the contactor is faulty. Replace.

Return to Section TOC
Return to Master TOC

CONTACTOR & CONTACTOR PC BOARD TEST *(continued)*

FIGURE F.15. CONTROL BOARD

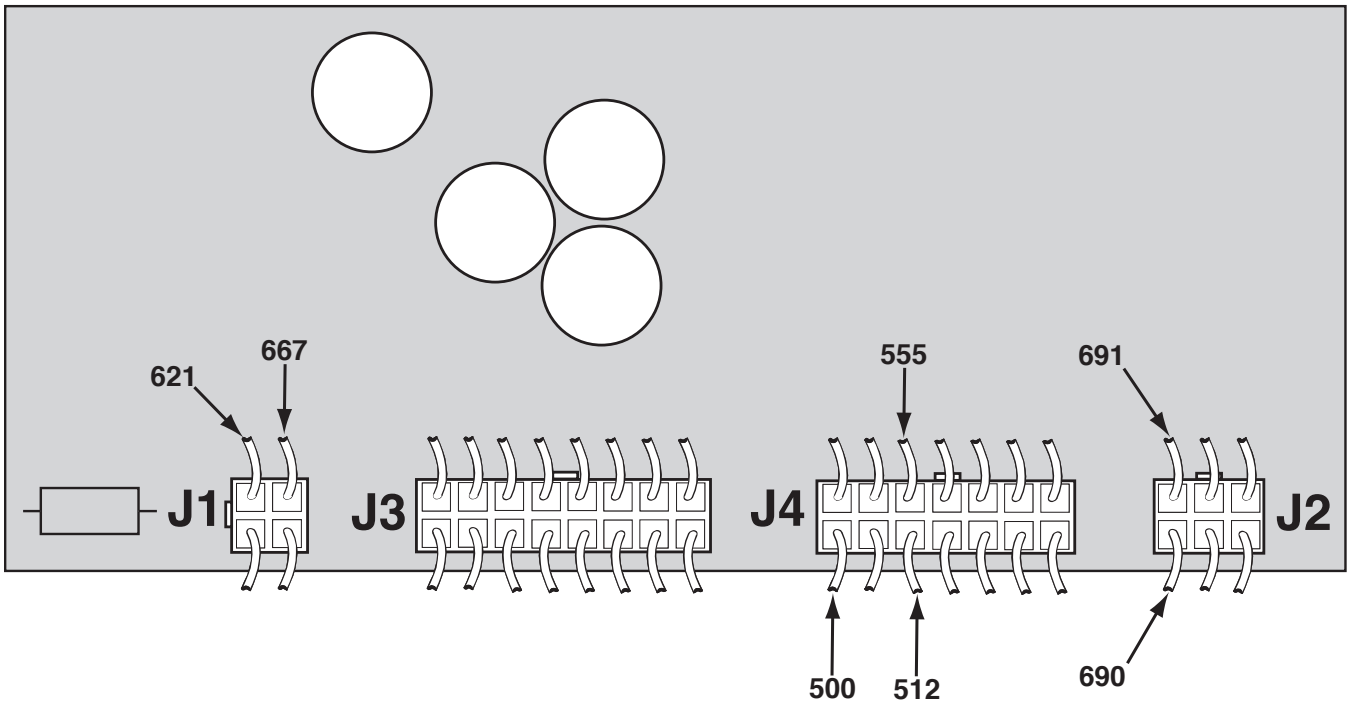

CONTACTOR PC BOARD TEST

1. Check to be sure plug J9, on contactor board and plug J3, on the control board are present and secure. See ***Figures F.14*** and F.15.
2. If optional gas timer pc board is installed, remove plug J6 from contactor board and install jumper plug. See Wiring Diagram.
3. Apply at least 25VDC but no more than 100VDC to the LN-25™ from the electrode cable to the work sensing lead. Observe polarity and set polarity switch.
4. Check for the applied voltage at plug J9 pins 1 & 2 (lead 667+ and 621-). See ***Figure F.14.***
5. With the trigger activated, and a normally operating contactor connected, the voltage measured at the contactor leads J9 pins 13 & 14 is approximately 1.0 VDC. See ***Figure F.14.*** See the Wiring Diagram. If the 1.0 VDC is not present when the trigger is activated, the contactor board may be faulty.
6. Be sure to reconnect all plugs previously removed.

Note: If the original Control Board has been replaced with L12253-[ ], ***See Figure F.16*** and follow instructions for that Control Board

Return to Section TOC
Return to Master TOC

CONTACTOR & CONTACTOR PC BOARD TEST *(continued)*

FIGURE F.16 CONTROL BOARD (L12253-[ ])

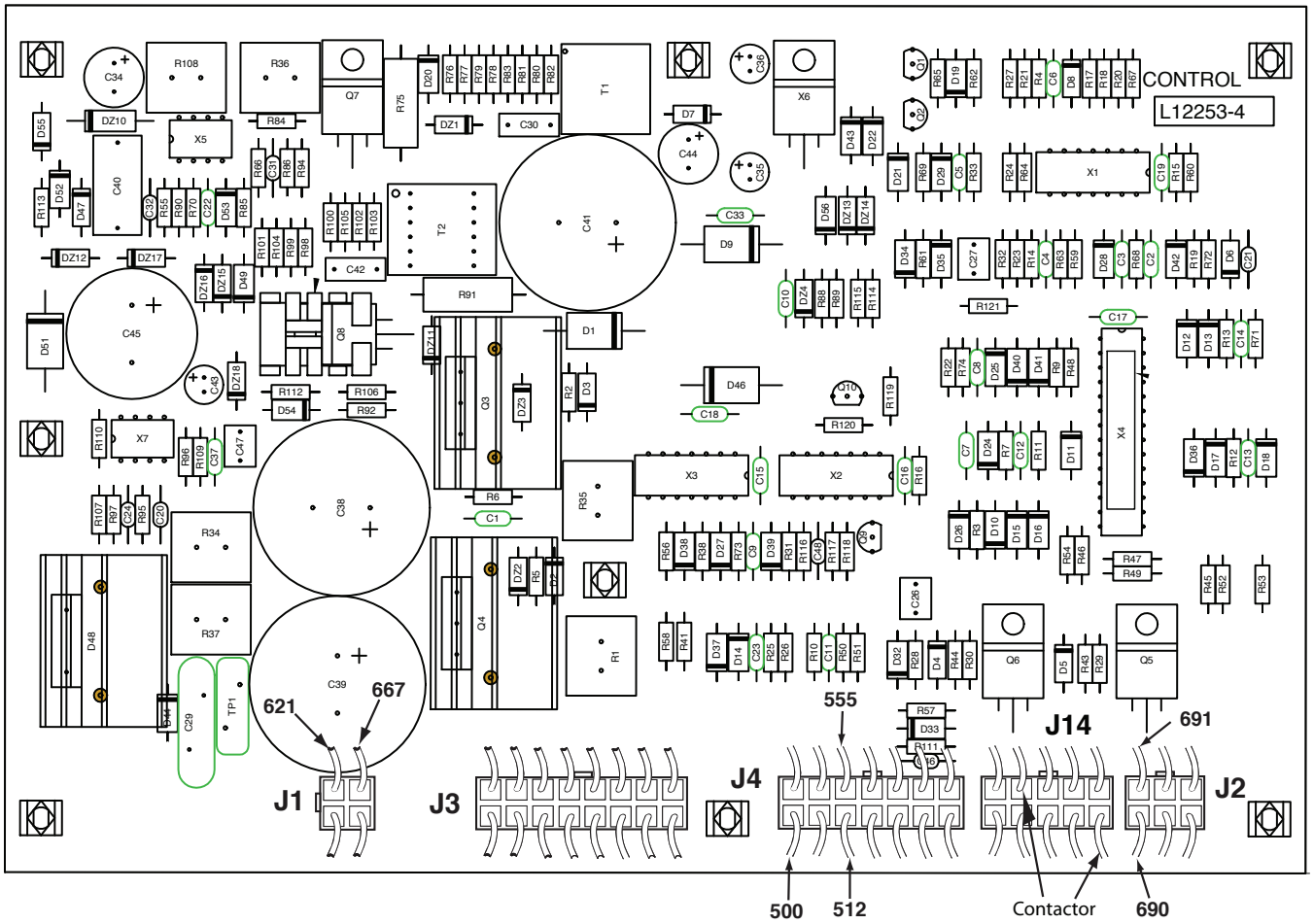

1. Check to be sure that plug P14 is connected to the Control Board and is secure.

2. Apply at least 25vdc but no more than 100vdc to the LN-25™ from the Electrode cable to the Work Sensing Lead. Observe the polarity and set the Polarity Switch accordingly.

3. Check for the applied voltage at Plug J1 pins 1 and 3 (leads 667+ and 621-). See Figure F.16.

4. With the Trigger closed and a normally operating contactor connectedthe voltag measured at Pins 1 and 9 of J14 should be approximately 1.0VDC. If not, the Control Board may be defective.

Return to Section TOC
Return to Master TOC

NOTES

F-30

Return to Section TOC
Return to Master TOC
Return to Section TOC
Return to Master TOC
Return to Section TOC
Return to Master TOC
Return to Section TOC
Return to Master TOC

CONTACTOR PC BOARD REPLACEMENT

⚠ WARNING

Service and repair should be performed by only Lincoln Electric factory trained personnel. Unauthorized repairs performed on this equipment may result in danger to the technician or machine operator and will invalidate your factory warranty. For your safety and to avoid electrical shock, please observe all safety notes and precautions detailed throughout this manual.

If for any reason you do not understand the test procedures or are unable to perform the test/repairs safely, contact the Lincoln Electric Service Department for electrical troubleshooting assistance before you proceed. Call 1-888-935-3877.

TOOLS REQUIRED

Phillips Head Screwdriver

Return to Section TOC
Return to Master TOC

CONTACTOR PC BOARD REPLACEMENT *(continued)*

FIGURE F.17. – CONTACTOR PC BOARD (CODES 10148 AND ABOVE).

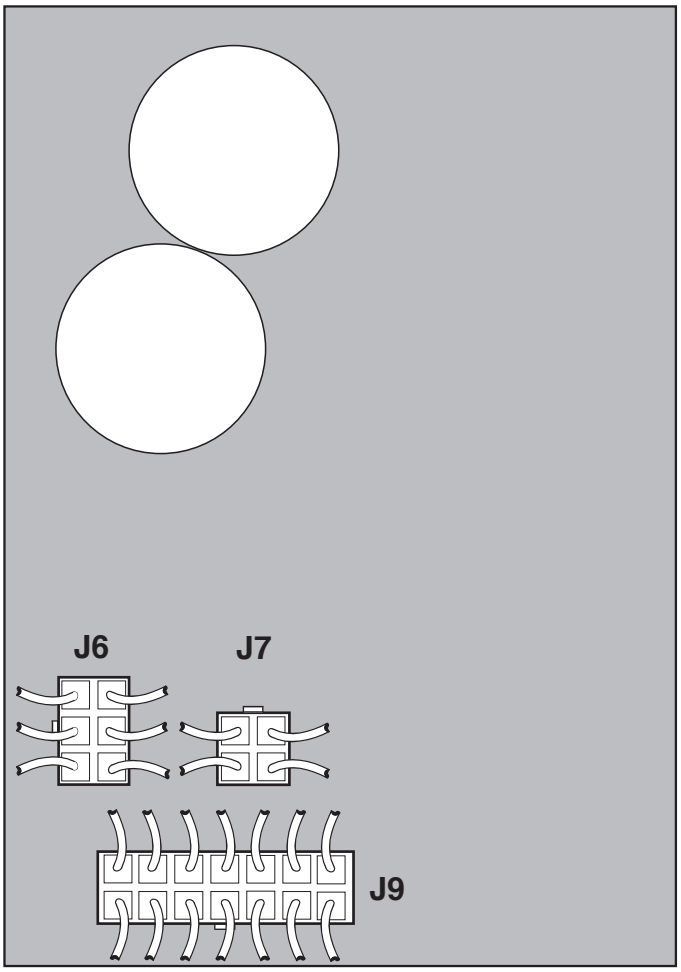

REPAIR PROCEDURE

1. Observe the static electricity precautions detailed in PC Board Troubleshooting Procedures at the beginning of this section.
2. Open the case door. Remove the wire reel by removing the retaining collar. ***See Figure F.5.***
3. Remove the screws holding the control box cover in place and remove the control box cover. ***See Figure F.5.***
4. For codes 10148 and above, remove plug J9 and plug J7 from the contactor PC board. See Figure F.17.

Return to Section TOC
Return to Master TOC

CONTACTOR PC BOARD REPLACEMENT *(continued)*

FIGURE F.18. – CONTROL PC BOARD PLUG LOCATIONS (CODES 9812 AND BELOW).

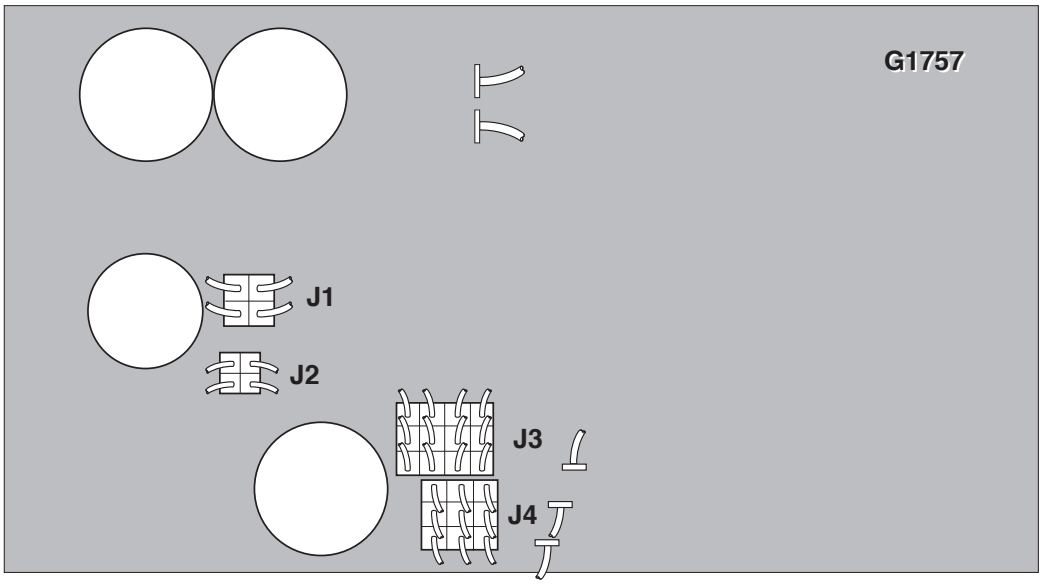

5. For codes 9812 and below, remove the contactor coil leads and plug J7 from the contactor PC board. See ***Figure F.17.*** Also for codes 9812 and below, remove plug J3 from the control PC board. See Figure F.18.

Return to Section TOC
Return to Master TOC

CONTACTOR PC BOARD REPLACEMENT *(continued)*

FIGURE F.19. - CONTACTOR PC BOARD REPLACEMENT.

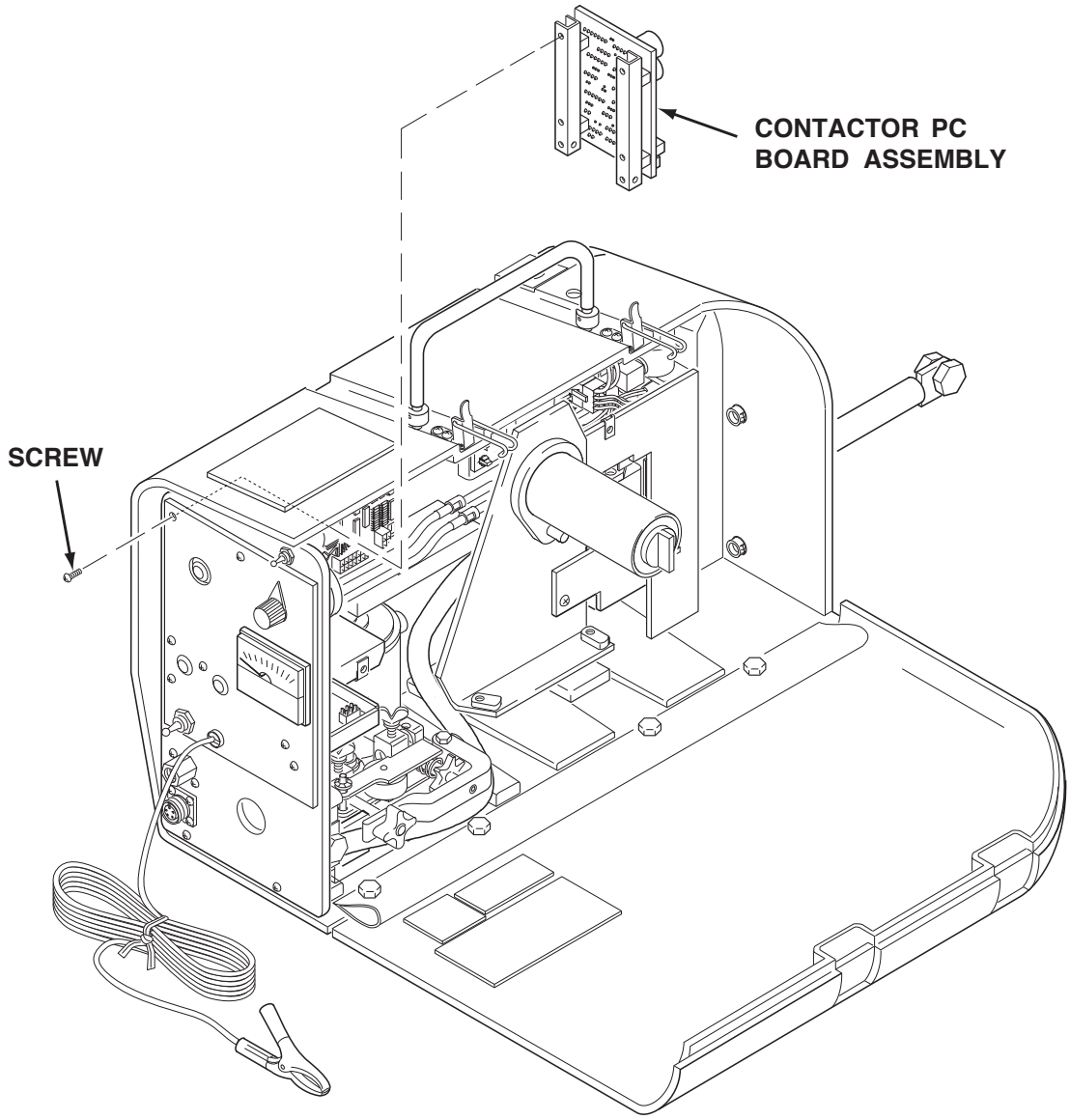

6. Remove the four screws from the front panel holding the contactor PC board assembly in place. Carefully remove the contactor PC board assembly. See Figure F.19.

7. Place the new contactor PC board assembly in position behind the front panel. Secure the contactor PC board assembly by installing the four screws into the front panel.

8. For codes 10148 and above, install plug J9 and plug J7 onto the contactor PC board. ***See Figure F.17.***

9. For codes 9812 and below, install the contactor coil leads and plug J7 onto the contactor PC board. ***See Figure F.18.*** Also for codes 9812 and below, install plug J3 onto the control PC board. ***See Figure F18.***

10. Install the control box cover and secure by installing the screws previously removed.

11. Install the wire reel and retaining collar and close the case door.

Return to Section TOC
Return to Master TOC

Return to Section TOC
Return to Master TOC

CONTROL PC BOARD REPLACEMENT

⚠ WARNING

Service and repair should be performed by only Lincoln Electric factory trained personnel. Unauthorized repairs performed on this equipment may result in danger to the technician or machine operator and will invalidate your factory warranty. For your safety and to avoid electrical shock, please observe all safety notes and precautions detailed throughout this manual.

If for any reason you do not understand the test procedures or are unable to perform the test/repairs safely, contact the Lincoln Electric Service Department for electrical troubleshooting assistance before you proceed. Call 1-888-935-3877.

TOOLS REQUIRED

Phillips Head Screwdriver

CONTROL PC BOARD REPLACEMENT *(continued)*

FIGURE F.20. – CONTROL PC BOARD PLUG LOCATIONS (CODES 10148 AND ABOVE).

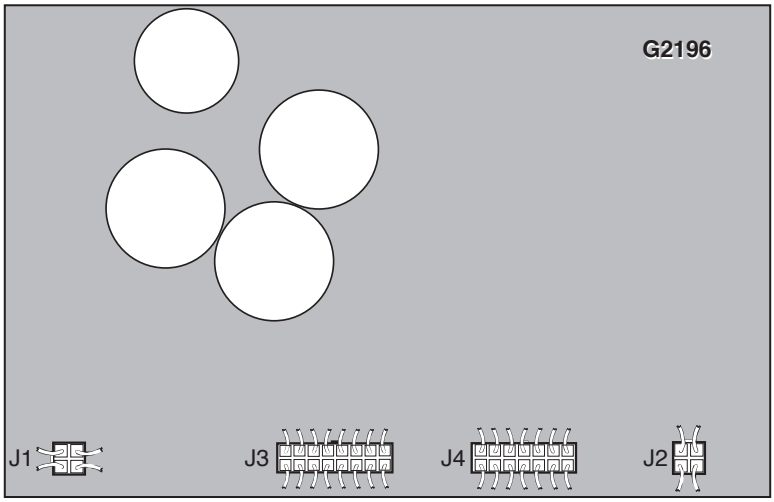

REPAIR PROCEDURE

1. Observe the static electricity precautions detailed in PC Board Troubleshooting Procedures at the beginning of this section.
2. Open the case door. Remove the wire reel by removing the retaining collar. ***See Figure F.5.***
3. Remove the screws holding the control box cover in place and remove the control box cover. ***See Figure F.5.***
4. For codes 10148 and above, remove the four plugs J1, J2, J3 and J4. See Figure F.20.
5. For codes 9812 and below, remove the four plugs J1, J2, J3 and J4. Also, tag and remove the five individual leads (three hall effect leads 500, 512 and 555 and two drive motor leads 539 and 541) connected to the control PC board. See Figure F.21.

NOTE: For Codes above 10148 with newer Control Board (L12253-[ ]) and a contactor, remove plug J14. *See Figure F.22.*

6. On older codes, the control PC board is larger. It may be necessary to remove the Contactor PC Board or the Remote Control PC Board if installed.

FIGURE F.21. – CONTROL PC BOARD (CODES 9812 AND BELOW).

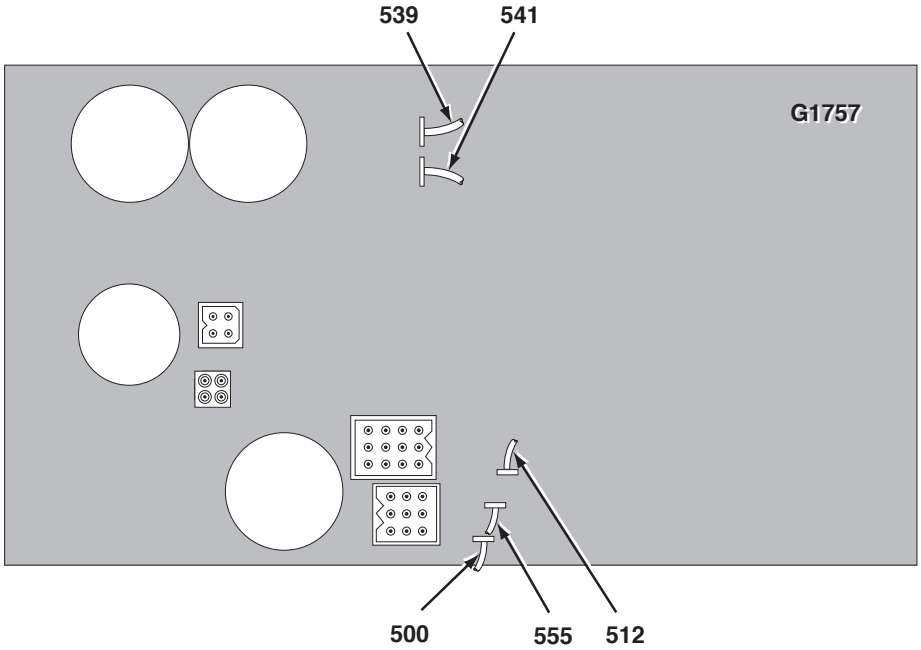

Return to Section TOC
Return to Master TOC

FIGURE F.22. - PLUG LOCATIONS FOR L12253-[ ] CONTROL BOARD

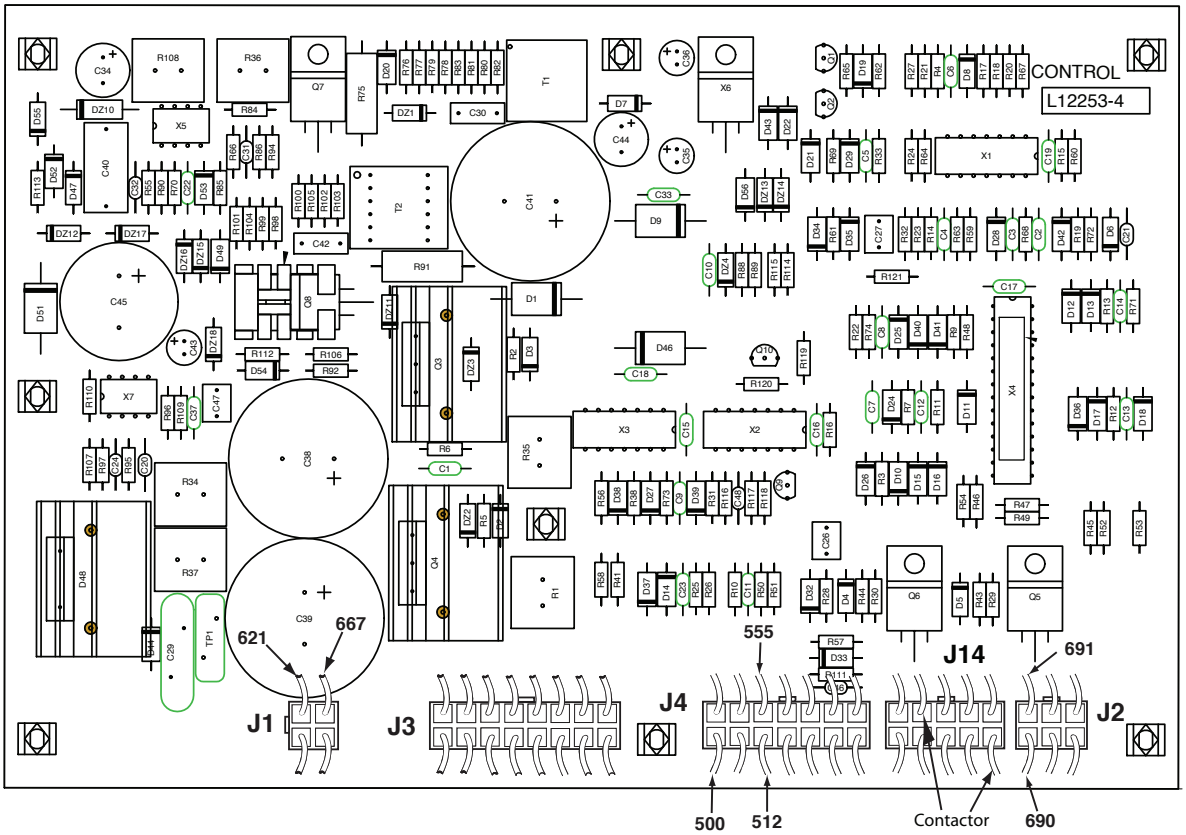

LINCOLN ELECTRIC

Return to Section TOC
Return to Master TOC

CONTROL PC BOARD REPLACEMENT *(continued)*

FIGURE F.24. – CONTROL BOARD REPLACEMENT.

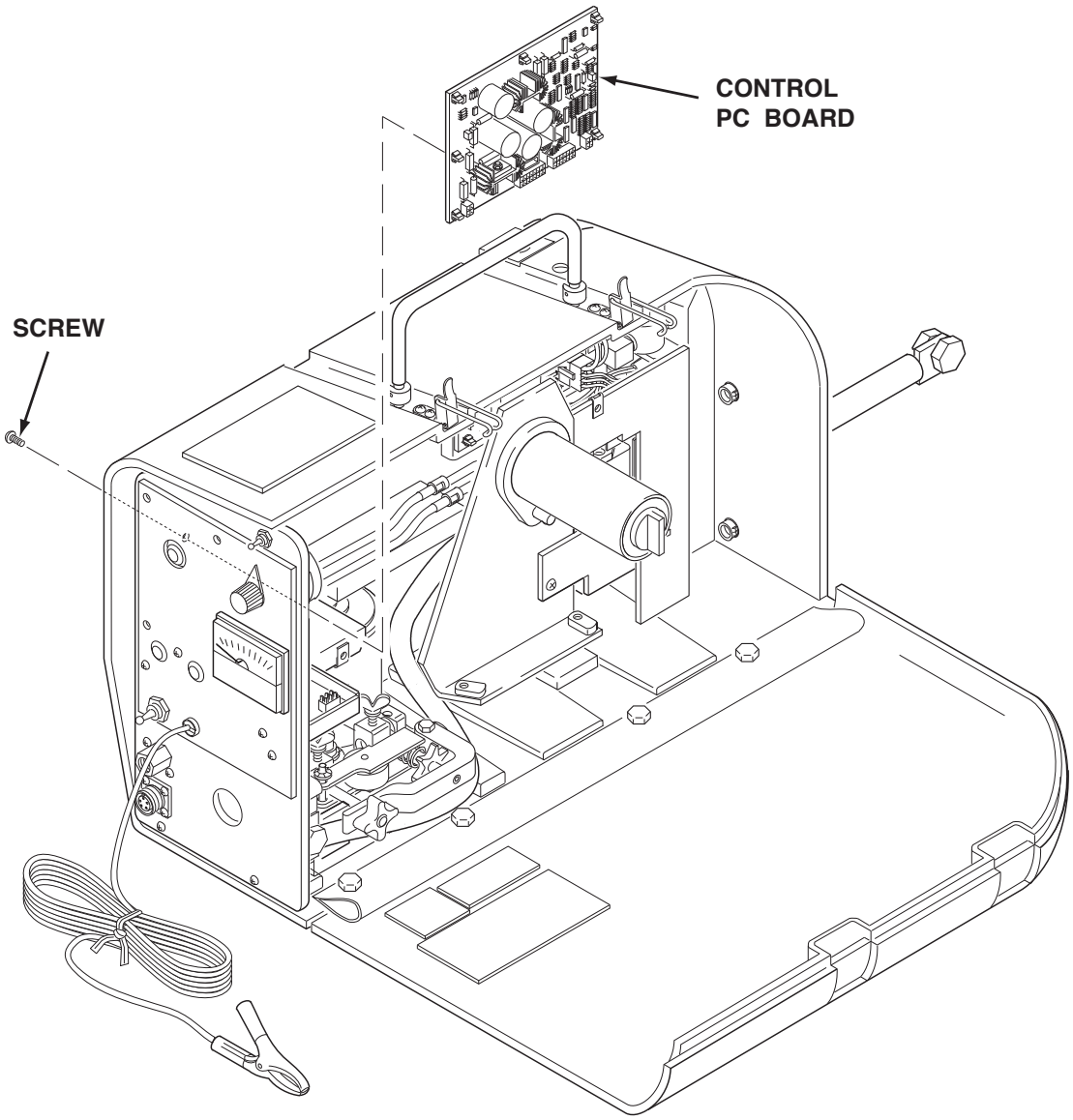

7. Remove the screws holding the control PC board to the inside of the case. Carefully remove the control board. See Figure F.24.

8. Place the new control PC board in position inside the case. Secure the control PC board by installing the screws from the outside of the case.

9. For codes 10148 and above, install the four Molex type plugs J1, J2, J3 and J4 onto the control PC board. See ***Figure F.20.***

NOTE:For Codes above 10148 with a newer Control Board (L12253-[ ]) and a contactor, install plug J14. ***See Figure F.22.***

10. For codes 9812 and below, install the four Molex type plugs J1, J2, J3 and J4. Also, connect the five individual leads to the control PC board. If necessary, refer to the wiring diagrams in the Electrical Diagrams Section. See ***Figure F.21.***

11. Re-install the Contactor PC Board or Remote Control PC Board if previously removed

11. Install the control box cover and secure by installing the screws previously removed.

12. Install the wire reel and retaining collar and close the case door.

Return to Section TOC
Return to Master TOC

Return to Section TOC
Return to Master TOC

CONTACTOR REPLACEMENT

(FOR CODES BELOW 10500)

⚠ WARNING

Service and repair should be performed by only Lincoln Electric factory trained personnel. Unauthorized repairs performed on this equipment may result in danger to the technician or machine operator and will invalidate your factory warranty. For your safety and to avoid electrical shock, please observe all safety notes and precautions detailed throughout this manual.

If for any reason you do not understand the test procedures or are unable to perform the test/repairs safely, contact the Lincoln Electric Service Department for electrical troubleshooting assistance before you proceed. Call 1-888-935-3877.

TOOLS REQUIRED

Phillips Head Screwdriver
5/16" Nut Driver
11/16" Wrench

CONTACTOR REPLACEMENT *(continued)*

FIGURE F.25 - CONTACTOR REPLACEMENT.

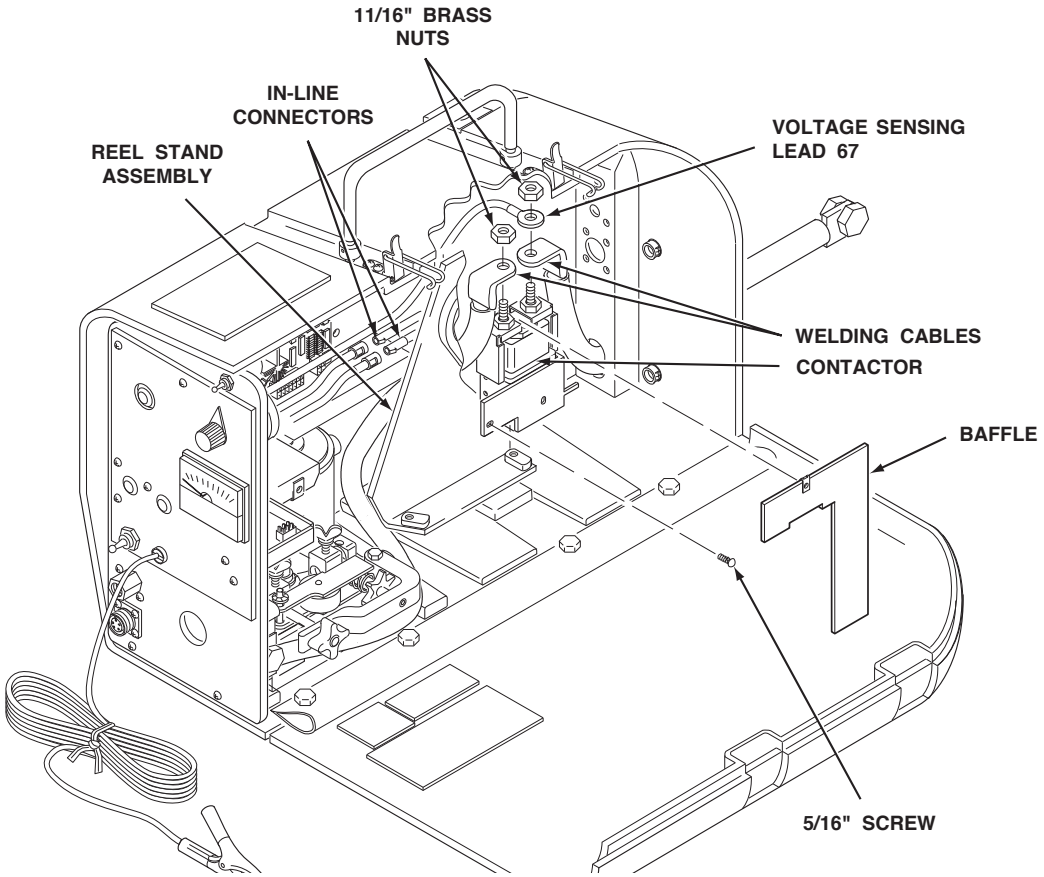

REPAIR PROCEDURE

1. Open the case door. Remove the wire reel by removing the retaining collar. ***See Figure F.5.***
2. Remove the screws holding the control box cover in place and remove the control box cover. ***See Figure F.5.***
3. Remove the baffle from in front of the contactor. See Figure F.25.
4. Remove the 5/16" screw holding the contactor in place.
5. Remove the two 11/16" brass nuts holding voltage sensing lead #67 and the welding cables to the contactor.
6. Disconnect the contactor coil leads by separating the two in-line connectors behind the reel stand assembly. For codes 9812 and below, remove the two contactor coil leads from the contactor PC board. See Figure F.25.
7. Cut or remove any cable ties or harness tape as necessary.
8. Carefully remove the contactor from the LN-25™.
9. Install a new contactor in the LN-25™.
10. Connect the contactor coil lead in-line connectors behind the reel stand assembly. See Figure F.25. For codes 9812 and below, install the contactor coil leads onto the contactor PC board. ***See Figure F.19.***
11. Install the welding cables and voltage sensing lead #67 to the contactor and secure with the two 11/16" brass nuts. See Figure F.25.

NOTE: Be sure brass nuts are tight. 11 ft-lb torque is recommended.

12. Install the 5/16" screw to secure the contactor in place.
13. Install the baffle in front of the contactor.
14. Install the control box cover and secure by installing the three screws. See ***Figure F.5.***
15. Install the wire reel and retaining collar and close the case door. See ***Figure F.5***.

Return to Section TOC
Return to Master TOC

Return to Section TOC
Return to Master TOC

CONTACTOR REPLACEMENT

(FOR CODES ABOVE 10500)

⚠ WARNING

Service and repair should be performed by only Lincoln Electric factory trained personnel. Unauthorized repairs performed on this equipment may result in danger to the technician or machine operator and will invalidate your factory warranty. For your safety and to avoid electrical shock, please observe all safety notes and precautions detailed throughout this manual.

If for any reason you do not understand the test procedures or are unable to perform the test/repairs safely, contact the Lincoln Electric Service Department for electrical troubleshooting assistance before you proceed. Call 1-888-935-3877.

TOOLS REQUIRED

Phillips Head Screwdriver
5/16" Nut Driver
11/16" Wrench
3/4” Wrench
5/8” Wrench

Return to Section TOC
Return to Master TOC

CONTACTOR REPLACEMENT *(continued)*

FIGURE F.26.

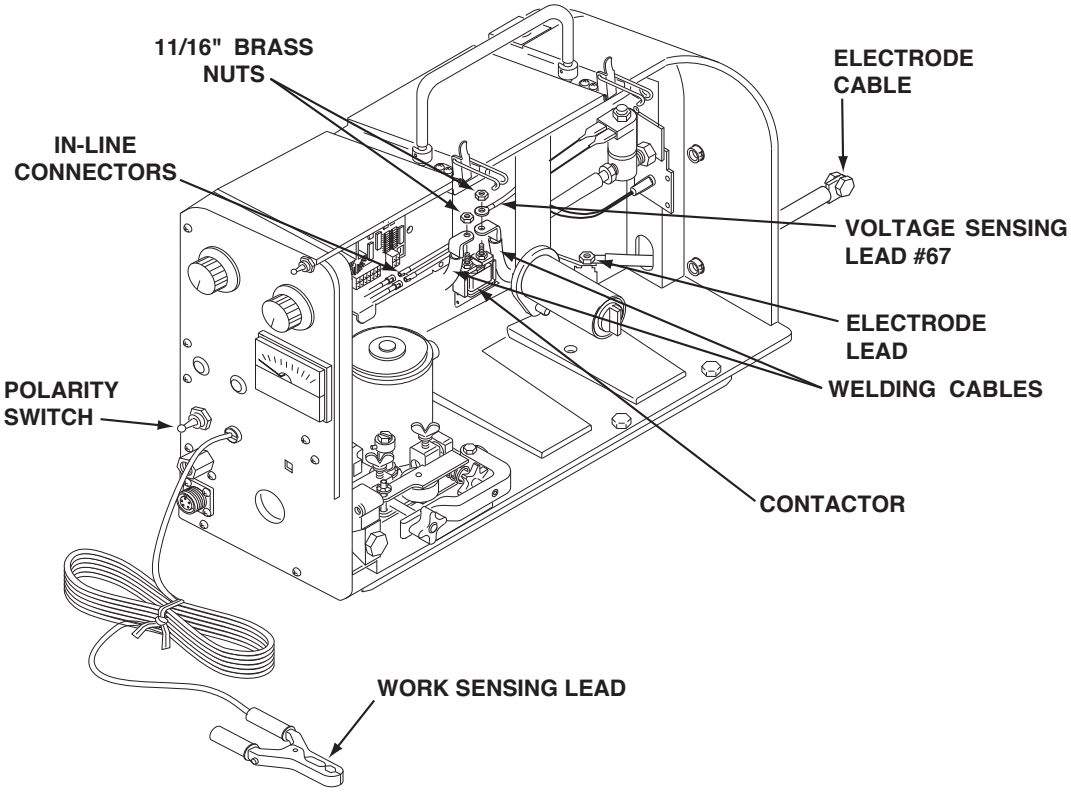

REPAIR PROCEDURE

1. Open the case door. Remove the wire reel by removing the retaining collar. ***See Figure F.5.***
2. Remove the screws holding the control box cover in place and remove the control box cover.
3. Remove the two fiber baffles from the area in front of the contactor. See ***Figure F.25.***
4. With a 3/4” wrench, remove the electrode lead. See Figure F.26.
5. Using the 11/16” wrench, remove the two brass nuts from the contactor terminals. Remove the heavy leads and lead #67 from the terminals. Note location of lead #67. See Figure F.26.
6. Remove the 5/16” screw holding the contactor bracket to the spindle bracket.
7. Disconnect the contactor coil leads by separating the two in-line connectors behind the reel stand assembly.
8. Cut or remove any cable ties or harness tape as necessary.
9. Carefully remove the contactor assembly from the LN-25™.
10. Install a new contactor in the LN-25™.
11. Connect the contactor coil lead in-line connectors behind the reel stand assembly. See Figure F.26.
12. Place contactor assembly in position.
13. Install the 5/16" screw to secure the contactor to the spindle assembly.
14. Install the welding cables and voltage sensing lead #67 to the contactor and secure with the two 11/16" brass nuts. See Figure F.26. Be sure brass nuts are tight. 11 ft-lb torque is recommended.
15. Install the baffles in front of the contactor.
16. Install the control box cover and secure by installing the screws previously removed.
17. Install the wire reel and retaining collar and close the case door.
18. Install the two 5/8” screws previously removed from the bottom of the machine.

Return to Section TOC
Return to Master TOC

GAS SOLENOID VALVE AND/OR SOLENOID PC BOARD (IF PRESENT) REPLACEMENT

⚠ WARNING

Service and repair should be performed by only Lincoln Electric factory trained personnel. Unauthorized repairs performed on this equipment may result in danger to the technician or machine operator and will invalidate your factory warranty. For your safety and to avoid electrical shock, please observe all safety notes and precautions detailed throughout this manual.

If for any reason you do not understand the test procedures or are unable to perform the test/repairs safely, contact the Lincoln Electric Service Department for electrical troubleshooting assistance before you proceed. Call 1-888-935-3877.

TOOLS REQUIRED

Phillips Head Screwdriver
3/4" Wrench
Pliers

Return to Section TOC
Return to Master TOC

GAS SOLENOID VALVE AND/OR SOLENOID PC BOARD (IF PRESENT) REPLACEMENT *(continued)*

FIGURE F.27. – GAS SOLENOID ASSEMBLY WIRING (CODES 10148 THRU 10500).

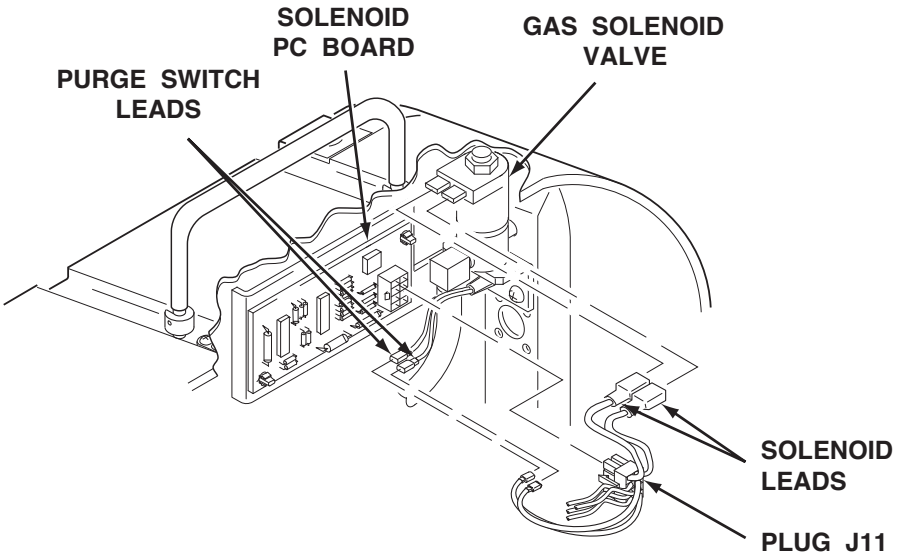

REPAIR PROCEDURE

1. pen` the case door. emove` the wire reel by removing the retaining collar. ***See Figure F.5.***

2. emove` the screws holding the control box cover in place and remove the control box cover. ***See Figure F.5.***

NOTE: If only the gas solenoid valve needs replacing, it may not be necessary to disconnect all of the wiring. Disconnect wiring only as needed.

3. For codes 10148 thru 10500, remove plug J11 from the solenoid PC board. Also, disconnect the two solenoid leads from the gas solenoid valve, and disconnect the purge switch leads. See Figure F.27.

4a. For codes above 10500 remove leads #690 & #691 from the solenoid valve. See Figure F.28.

4b. Using a 5/16" nut driver remove the two screws holding the solenoid & purge button assembly to the case. Remove the assembly.

FIGURE F.28. – GAS SOLENOID ASSEMBLY WIRING (FOR CODES ABOVE 10500).

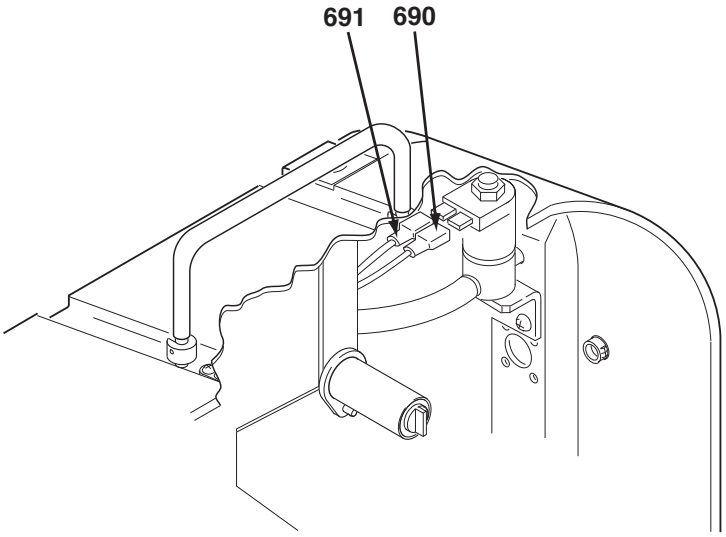

Return to Section TOC
Return to Master TOC

GAS SOLENOID VALVE AND/OR SOLENOID PC BOARD (IF PRESENT) REPLACEMENT *(continued)*

FIGURE F.29. – SOLENOID ASSEMBLY WIRING (CODES 9812 AND BELOW).

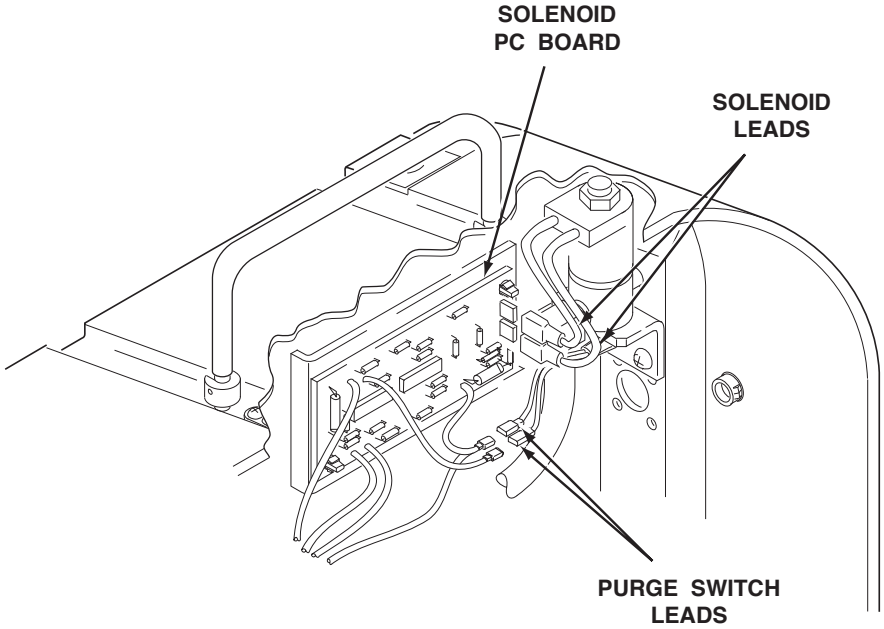

4c. Remove the gas hose from the solenoid nipple.

4d. Using the 3/8" nut driver, remove the purge button nut from the assembly. Remove the purge button.

4e. Remove any necessary brass fittings required. See Figure F.30.

4f. Reassemble in reverse order and reconnect leads as necessary.

FIGURE F.30. GAS SOLENOID ASSEMBLY (FOR CODES ABOVE 10500)

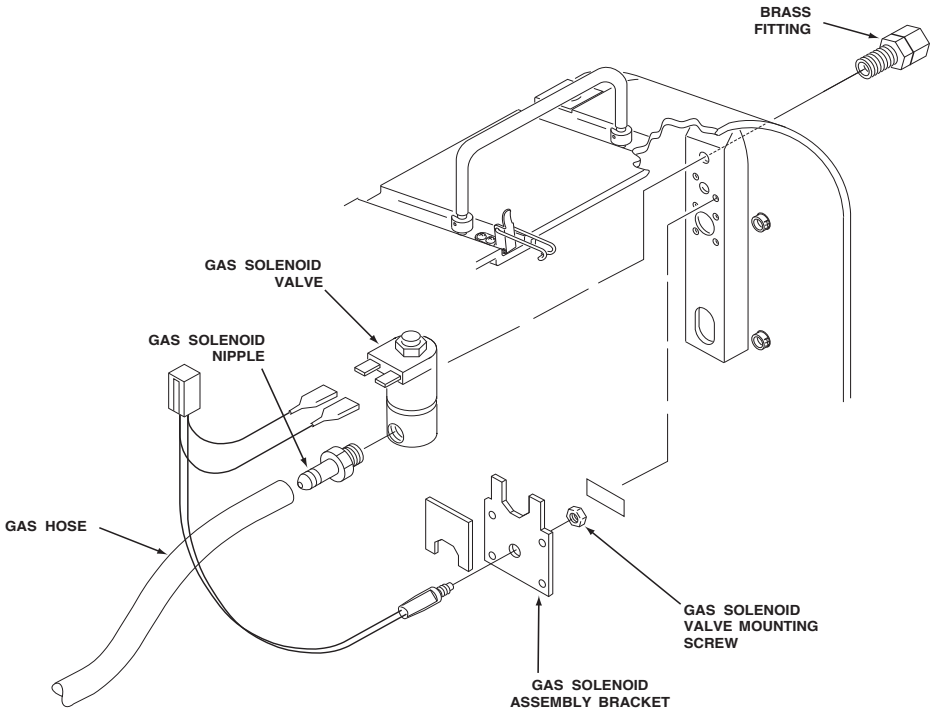

Return to Section TOC
Return to Master TOC

GAS SOLENOID VALVE AND/OR SOLENOID PC BOARD (IF PRESENT) REPLACEMENT *(continued)*

FIGURE F.31. – GAS SOLENOID ASSEMBLY FOR EARLIER CODES.

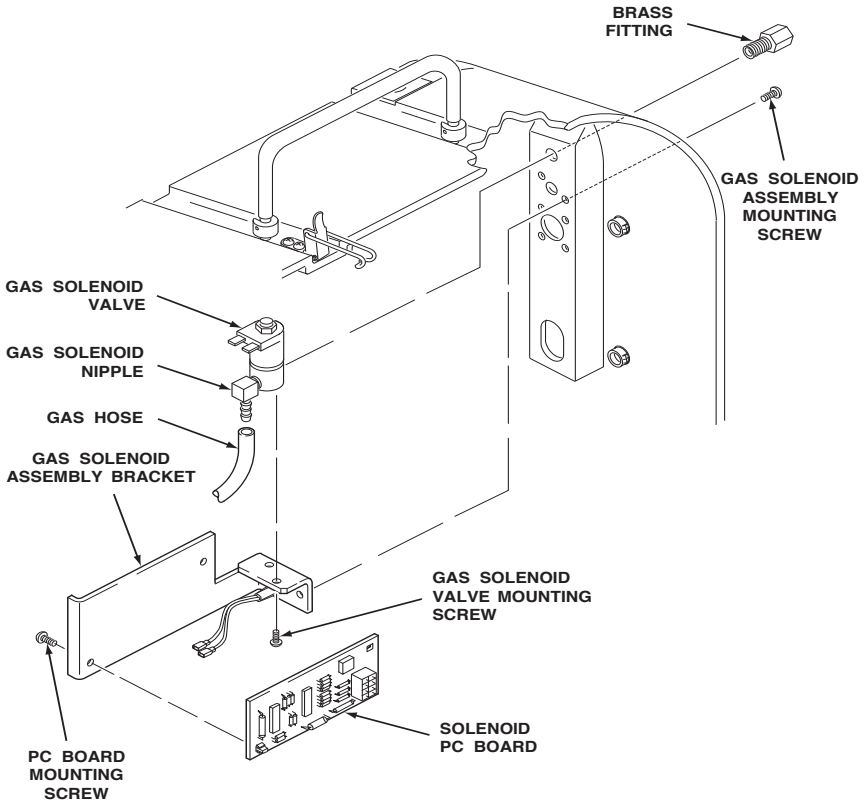

5. For codes 9812 and below, remove the two solenoid leads from the solenoid PC board and disconnect the purge switch leads. See Figure F.31. Also, remove plug J2 from the control board.
6. Remove the gas hose from the gas solenoid nipple. Remove the brass fitting connected to the gas solenoid valve from the outside of the case. See Figure F.31.
7. Remove the two screws mounting the gas solenoid and assembly bracket to the case. Carefully remove the assembly.
8. Remove the two screws mounting the gas solenoid valve to the assembly bracket. Remove the gas solenoid valve.
9. Remove the two screws mounting the solenoid PC board to the assembly bracket. Remove the solenoid PC board.
10. Install the replacement solenoid PC board onto the assembly bracket and secure with the two mounting screws.
11. Install the replacement gas solenoid valve onto the assembly bracket and secure with the two mounting screws.
12. Install the gas solenoid assembly bracket into the case and secure with the two mounting screws.
13. Install the gas hose onto the gas solenoid nipple. Install the brass fitting into the solenoid valve from the outside of the case.
14. For codes 10148 thru 10500, install plug J11 onto the solenoid PC board. Connect the leads to the gas solenoid valve and purge switch.
15. For codes 9812 and below, install the two leads from the gas solenoid valve onto the solenoid PC board and connect the purge switch leads. Also, install plug J2 onto the control board.
16. Install the control box cover and secure by installing the three screws previously removed.
17. Install the wire reel and retaining collar and close the case door.

Return to Section TOC
Return to Master TOC

DRIVE MOTOR AND GEARBOX REPLACEMENT AND ACCESS TO HALL EFFECT MODULE

⚠ WARNING

Service and repair should be performed by only Lincoln Electric factory trained personnel. Unauthorized repairs performed on this equipment may result in danger to the technician or machine operator and will invalidate your factory warranty. For your safety and to avoid electrical shock, please observe all safety notes and precautions detailed throughout this manual.

If for any reason you do not understand the test procedures or are unable to perform the test/repairs safely, contact the Lincoln Electric Service Department for electrical troubleshooting assistance before you proceed. Call 1-888-935-3877.

TOOLS REQUIRED

Phillips Head Screwdriver
3/4" Wrench
5/8" Wrench
7/16" Wrench
Slot Head Screwdriver

Return to Section TOC
Return to Master TOC

DRIVE MOTOR AND GEARBOX REPLACEMENT AND ACCESS TO HALL EFFECT MODULE *(continued)*

FIGURE F.32. – WIRE DRIVE ASSEMBLY REPLACEMENT.

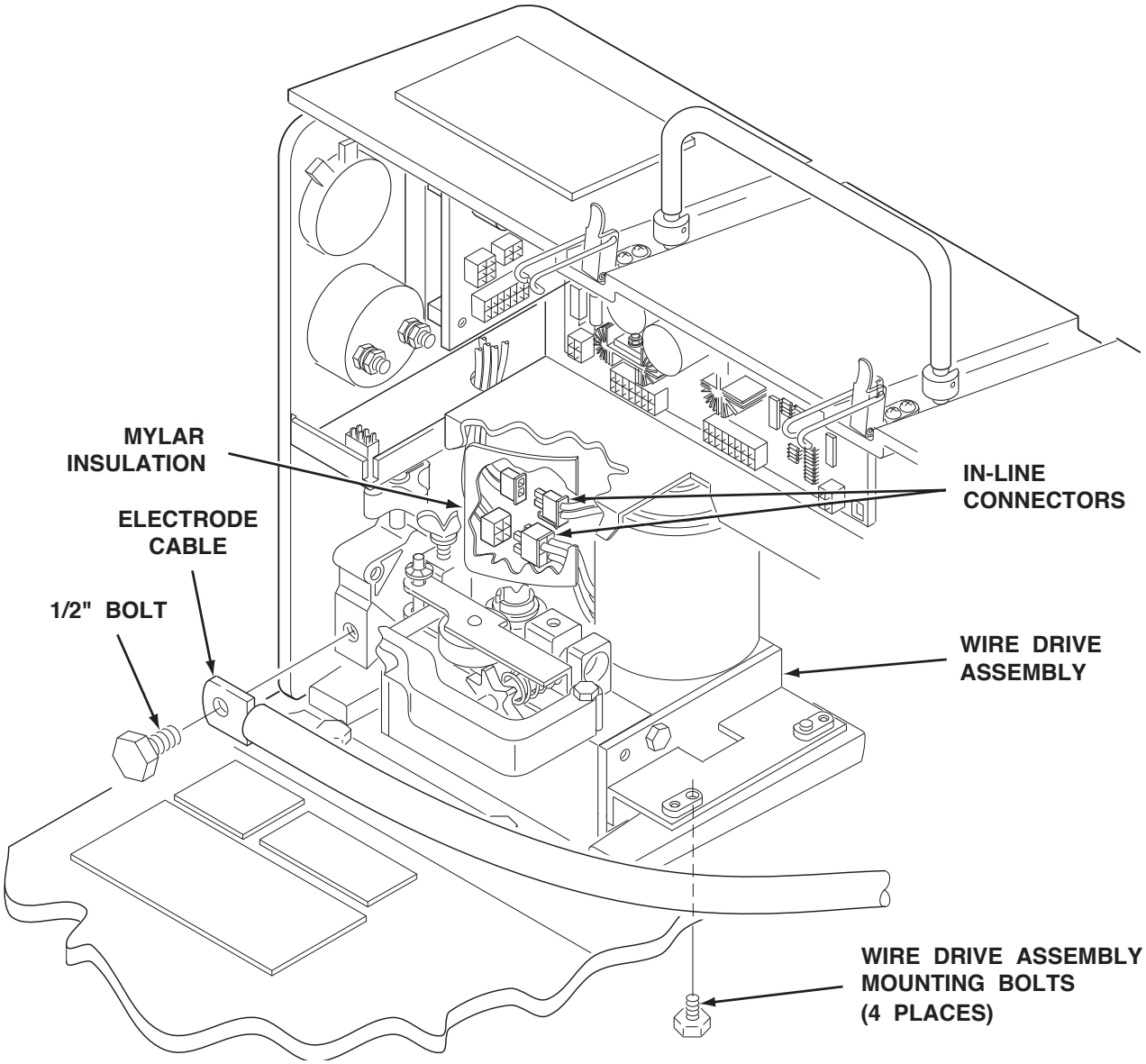

REPAIR PROCEDURE

1. Observe the static electricity precautions detailed in ***PC Board Troubleshooting Procedures*** at the beginning of this section.
2. Open the case door. Remove the wire reel by removing the retaining collar. ***See Figure F.5.***
3. Remove the screws holding the control box cover in place and remove the control box cover. ***See Figure F.5.***
4. For codes 10148 and above, separate both in-line connectors behind the mylar insulation. See Figure F.32. For codes 9812 and below, remove the two armature leads (539 and 541) and the three hall effect module leads (500, 512 and 555) from the control board. ***See Figure F.33.***
5. Remove the 1/2" bolt securing the electrode cable to the gear box conductor block. Remove the four bolts mounting the wire drive assembly to the bottom of the case. See Figure F.32.
6. Carefully remove the wire drive assembly. See Figure F.32.

Return to Section TOC
Return to Master TOC

DRIVE MOTOR AND GEARBOX REPLACEMENT AND ACCESS TO HALL EFFECT MODULE *(continued)*

7. emove` the two screws and loc` washers holding the rear end plate to the gearbox and remove the rear end plate. emove` the three drive motor mounting screws, flat washers and loc` washers one` is inside the gearbox housing.` ***See Figure F.34.***

8. Carefully remove the drive motor from the gearbox.

   NOTE`** o` access all` Effect Module for adustment` or replacement see ***Adjusting Speed Sensor Module* in the maintenance section of this manual.

9. Install the replacement drive motor onto the gearbox and secure with the three screws, flat washers and lock washers. Install the rear end plate, lock washers and screws.

10. Position the wire drive assembly inside the case and secure to the bottom of the case with the four bolts. Secure the electrode cable to the conductor bloc` with the 12 d bolt. ***See Figure F.32.***

11. For codes 10148 and above, connect both in-line connectors and position them behind the mylar insulation. See ***Figure F.32.*** For codes 9812 and below, install the two armature leads (539 and 541) and the three hall effect module leads (500, 12` and 555) onto the control board. See Figure F.33.

12. Install the control box cover and secure by installing the screws previously removed.

13. Install the wire reel and retaining collar and close the case door.

FIGURE F.33. – CONTROL BOARD

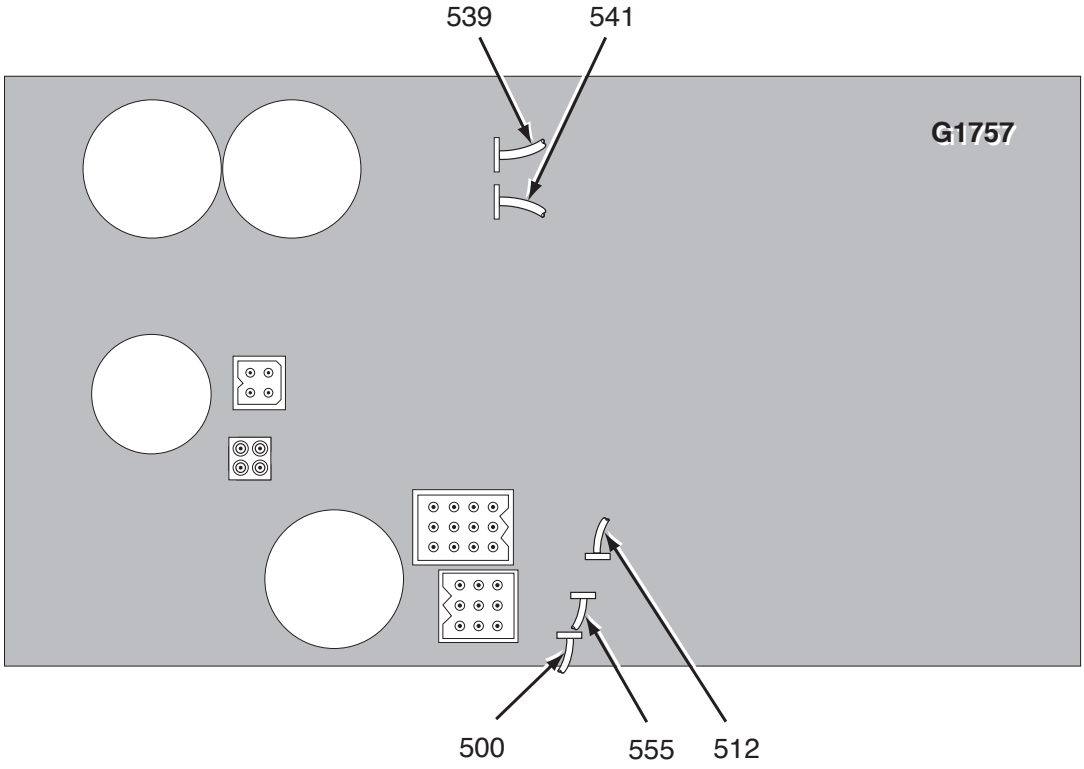

Return to Section TOC
Return to Master TOC

DRIVE MOTOR AND GEARBOX REPLACEMENT AND ACCESS TO HALL EFFECT MODULE *(continued)*

FIGURE F.34. – DRIVE MOTOR REPLACEMENT.

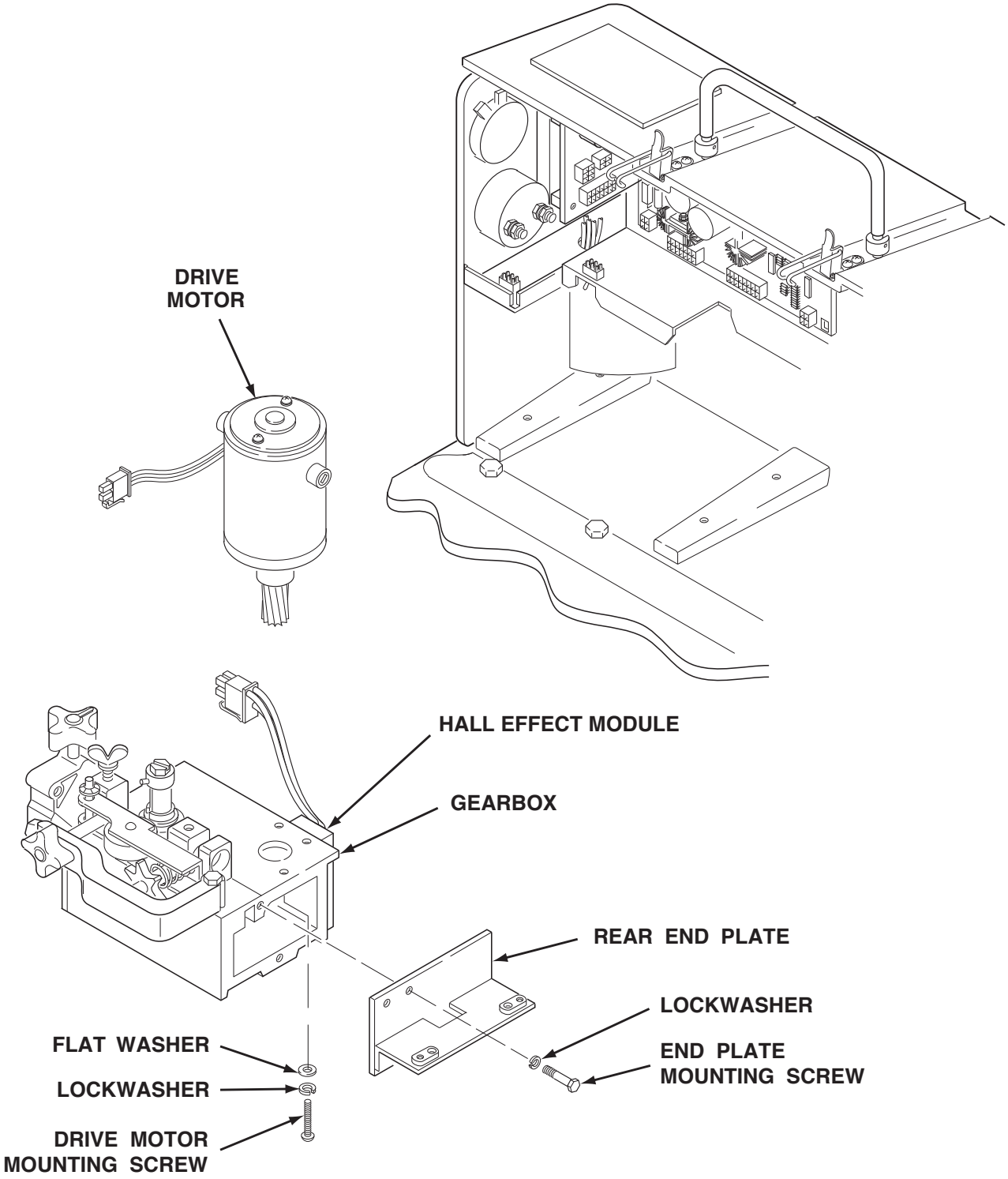

Return to Section TOC
Return to Master TOC

RETEST AFTER REPAIR

If a failed test indicates that any mechanical part that could affect the machine's electrical characteristics must be replaced or if any electrical components are repaired or replaced, the machine must be retested and meet the following standards.

Wire Feed Speed . . . . . .
50 through 700 Inches Per Minute

Voltmeter . . . . . .
Must be operative from 0 through 40 VDC

Gas Solenoid (optional) . . . . . .
Must operate when gun trigger is activated

Contactor (optional) . . . . . .
Must operate when gun trigger is activated

NOTES

F-52

Return to Section TOC
Return to Master TOC
Return to Section TOC
Return to Master TOC
Return to Section TOC
Return to Master TOC
Return to Section TOC
Return to Master TOC

TABLE OF CONTENTS
-ELECTRICAL DIAGRAMS SECTION-

ELECTRICAL DIAGRAMS . . . . . SECTION G
WIRING DIAGRAM - ABOVE CODE 11140 (G4679) G-2
WIRING DIAGRAM - CODE 10556 THRU 10558 (L10925) G-3
WIRING DIAGRAM - CODE 10100 THRU 10500 (L9644) G-4
WIRING DIAGRAM - BELOW CODE 9900 (L7545) G-5
COMPLETE MACHINE SCHEMATIC - CODES ABOVE 11140 (G5366) G-6
COMPLETE MACHINE SCHEMATIC - BELOW CODE 9900 ONLY (G1833) G-7
CONTROL PC BOARD SCHEMATIC - ABOVE CODE 11140 (G4616-3) G-8
CONTROL PC BOARD SCHEMATIC - CODE 10556 THRU 10558 (G3424-1) G-9
CONTROL PC BOARD SCHEMATIC - CODE 10100 THRU 10500 (G2194) G-10
CONTROL PC BOARD ASSEMBLY - CODES ABOVE 11140 (L12253-3) G-11
CONTROL PC BOARD ASSEMBLY - CODE 10556 THRU 10558 (G3425-3) G-12
CONTROL PC BOARD ASSEMBLY - CODE 10100 THRU 10500 (G2196-1) G-13
CONTROL PC BOARD ASSEMBLY - BELOW CODE 9900 (G1757-6) G-14
CONTACTOR PC BOARD SCHEMATIC - ABOVE CODE 10500 (M10965) G-15
CONTACTOR PC BOARD SCHEMATIC - CODE 10100 THRU 10500 (M17621) G-16
CONTACTOR PC BOARD SCHEMATIC - BELOW CODE 9900 (L7535-[ ] CONTACTOR - M15428)) G-17
CONTACTOR PC BOARD SCHEMATIC - BELOW CODE 9900 (L9185-[ ] CONTACTOR - M17139) G-18
CONTACTOR PC BOARD ASSEMBLY - ABOVE CODE 10500 (L10863-1) G-19
CONTACTOR PC BOARD ASSEMBLY - CODE 10100 THRU 10500 (L9670-1) G-20
CONTACTOR PC BOARD ASSEMBLY - BELOW CODE 9900 (L9185-2) G-21

Return to Master TOC
Return to Master TOC
Return to Master TOC
Return to Master TOC

WIRING DIAGRAM - ABOVE CODE 11140 (G4679)

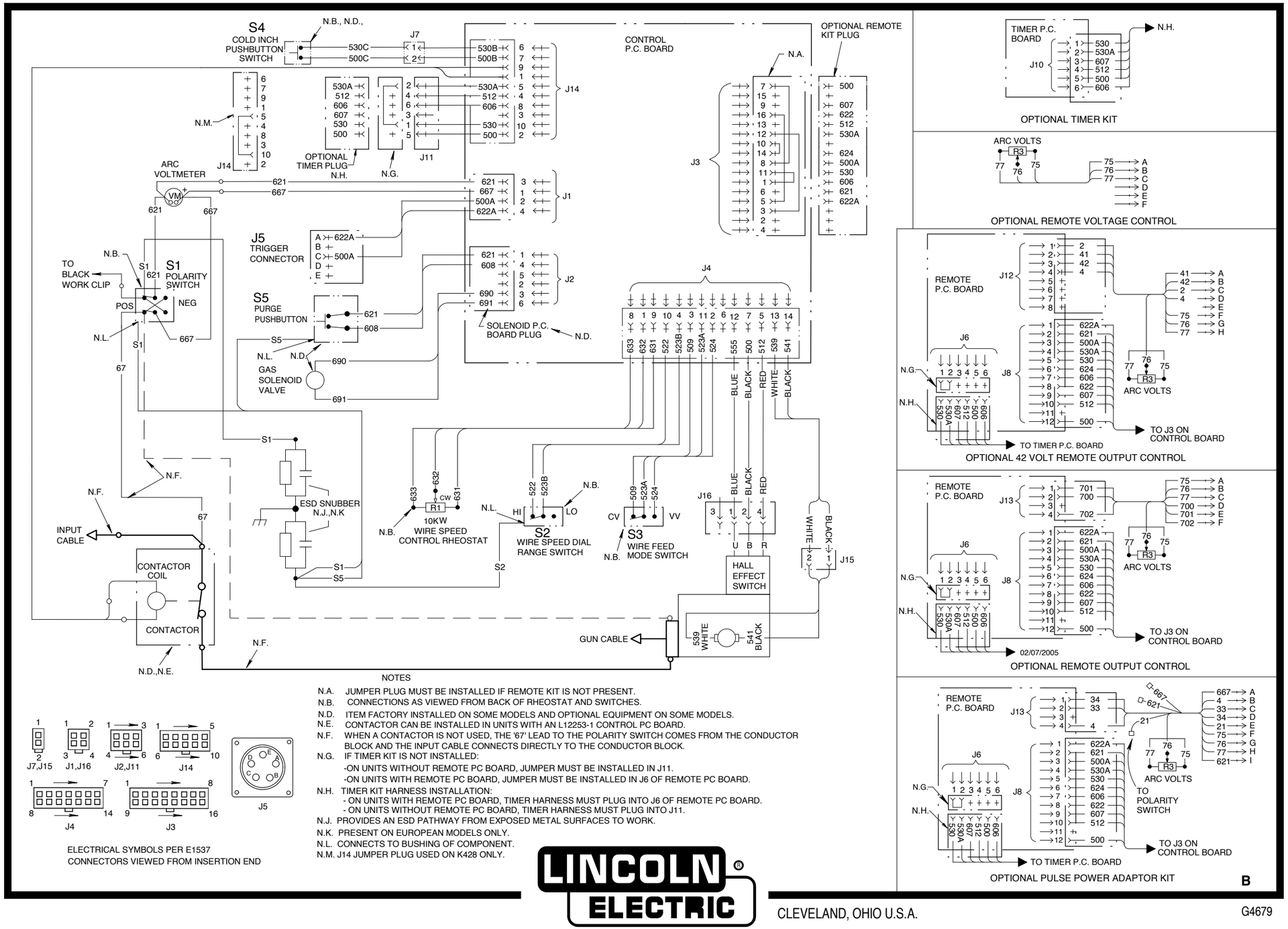

L N-25.

NOTE: This diagram is for reference only. It may not be accurate for all machines covered by this manual. The wiring diagram specific to your code is pasted inside one of the enclosure panels of your machine.

Return to Section TOC
Return to Master TOC

WIRING DIAGRAM - CODE 10556 THRU 10500 (L10925)

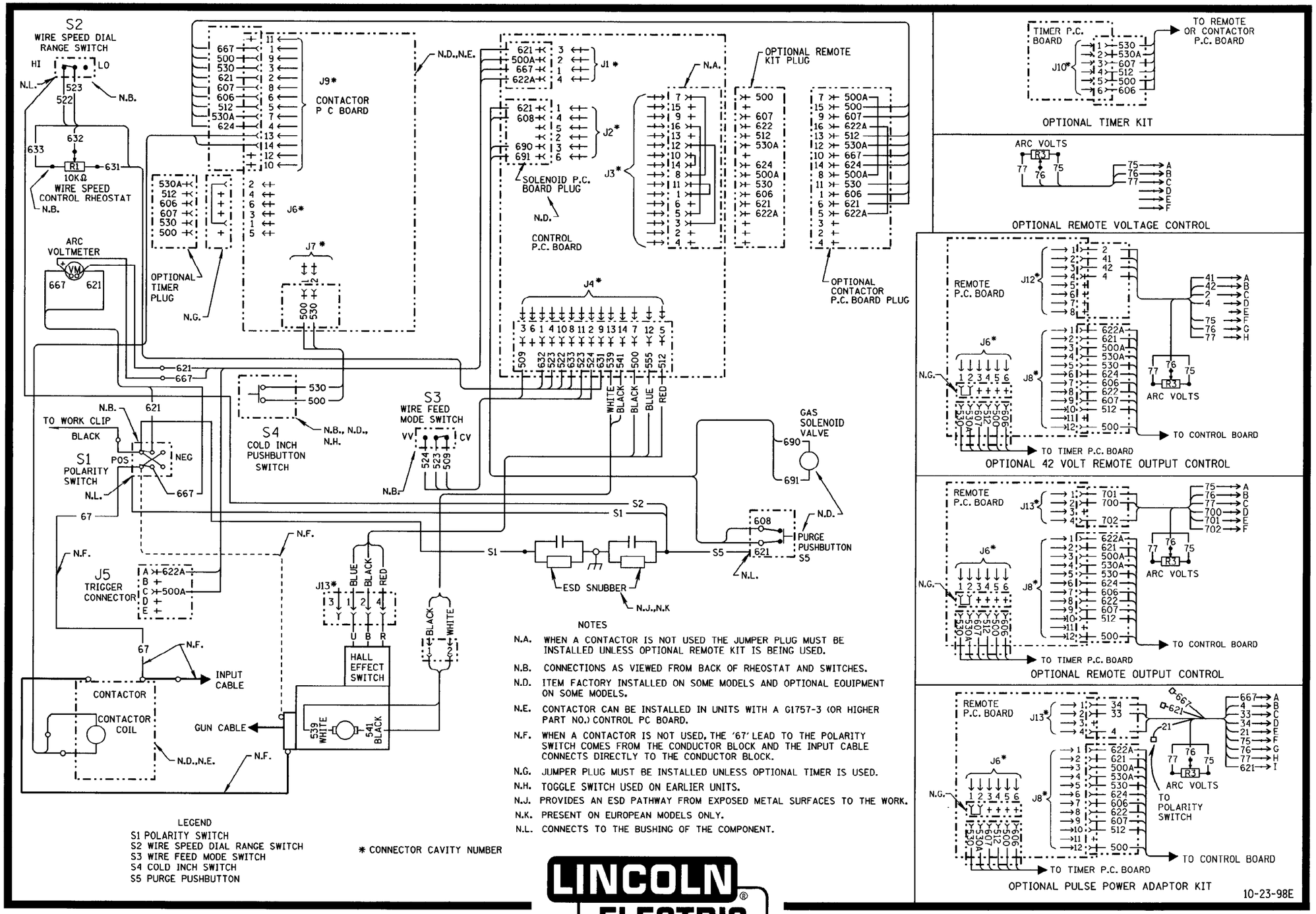

L N-25™

NOTE: This diagram is for reference only. It may not be accurate for all machines covered by this manual. The wiring diagram specific to your code is pasted inside one of the enclosure panels of your machine.

Return to Section TOC
Return to Master TOC

WIRING DIAGRAM - CODE 10100 THRU 10500 (L9644)

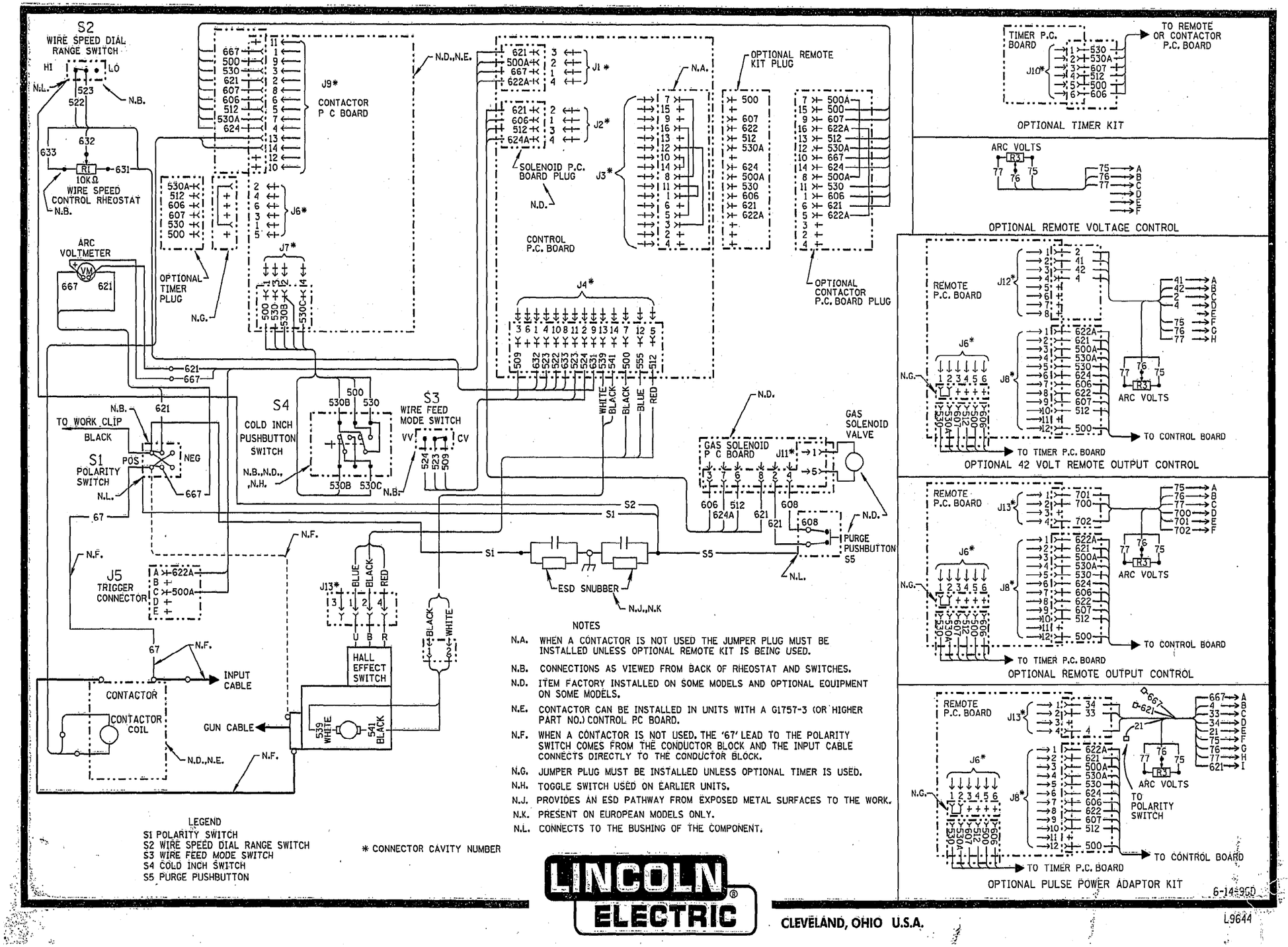

L N-25™

NOTE: This diagram is for reference only. It may not be accurate for all machines covered by this manual. The wiring diagram specific to your code is pasted inside one of the enclosure panels of your machine.

Return to Section TOC
Return to Master TOC

WIRING DIAGRAM - BELOW CODE 9900 (L7545)

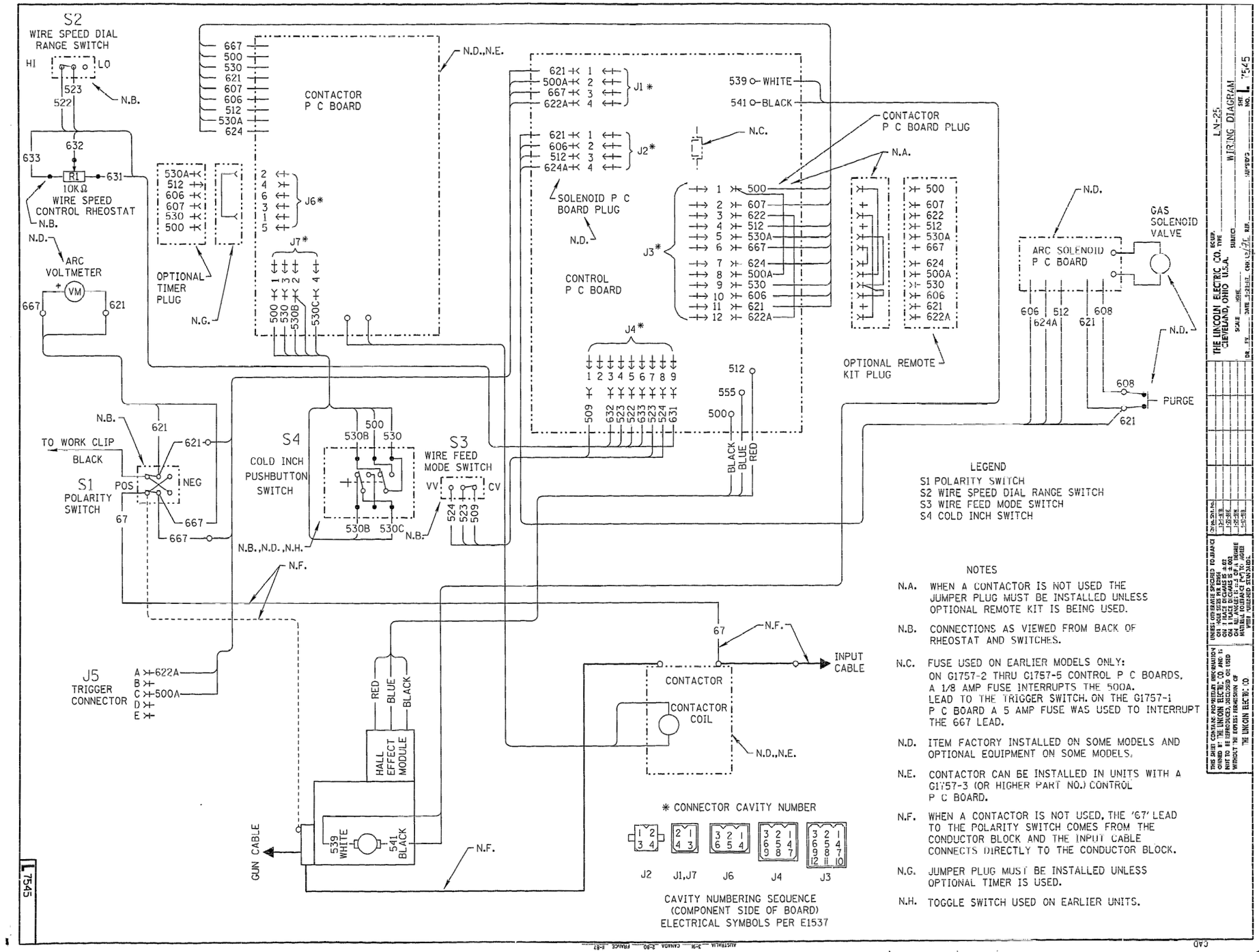

L N-25™

NOTE: This diagram is for reference only. It may not be accurate for all machines covered by this manual. The wiring diagram specific to your code is pasted inside one of the enclosure panels of your machine.

Return to Section TOC
Return to Master TOC
Return to Section TOC
Return to Master TOC
Return to Section TOC
Return to Master TOC
Return to Section TOC
Return to Master TOC

SCHEMATIC - COMPLETE MACHINE - CODES ABOVE 11140 (G5366)

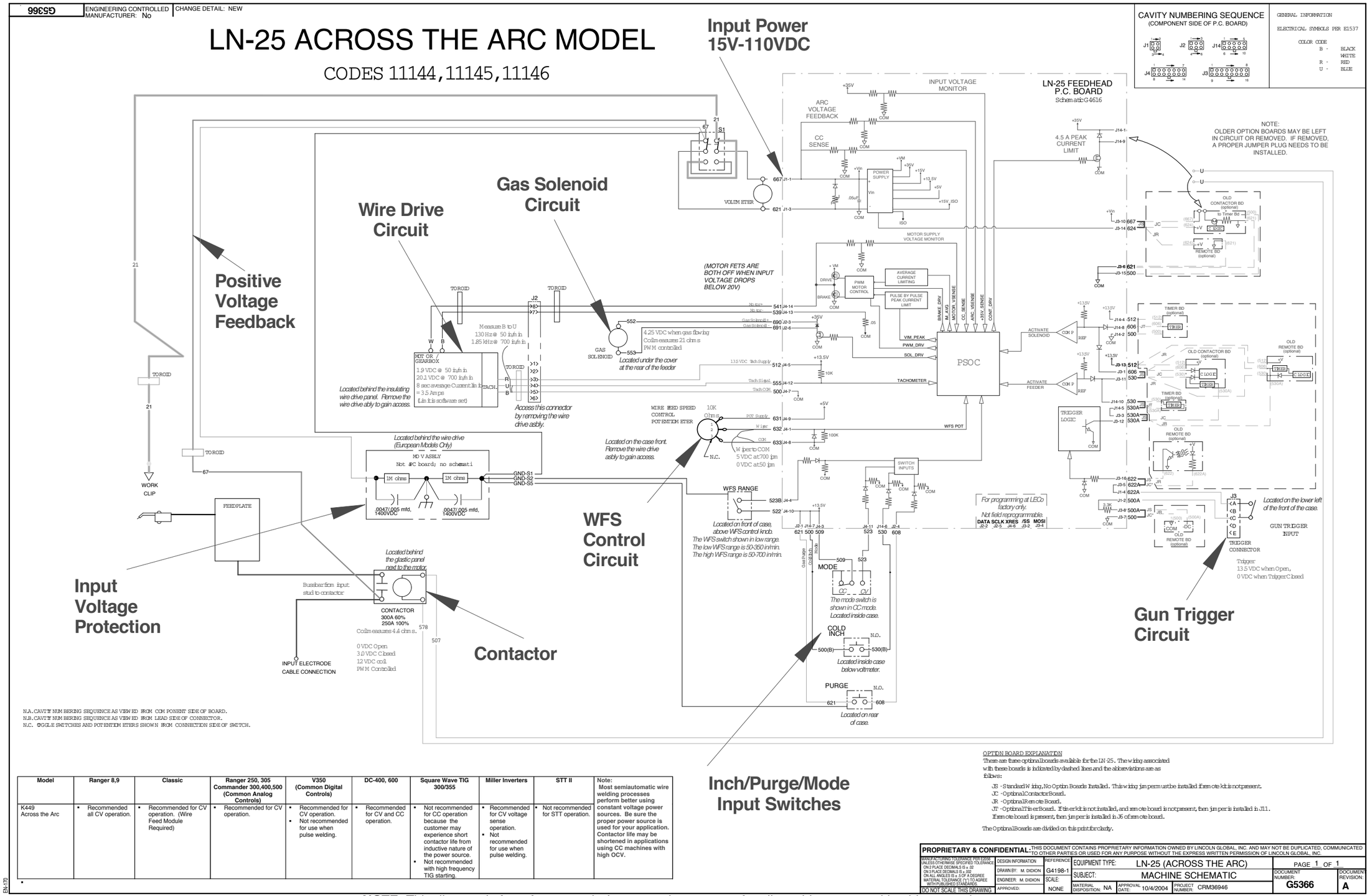

Model	Ranger 8,9	Classic	Ranger 250, 305 Commander 300,400,500 (Common Analog Controls)	V350 (Common Digital Controls)	DC-400, 600	Square Wave TIG 300/355	Miller Inverters	STT II	Note:
K449 Across the Arc	▪ Recommended all CV operation.	▪ Recommended for CV operation. (Wire Feed Module Required)	▪ Recommended for CV operation.	▪ Recommended for CV operation. ▪ Not recommended for use when pulse welding.	▪ Recommended for CV and CC operation.	▪ Not recommended for CC operation because the customer may experience short contactor life from inductive nature of the power source. ▪ Not recommended with high frequency TIG starting.	▪ Recommended for CV voltage sense operation. ▪ Not recommended for use when pulse welding.	▪ Not recommended for STT operation.	**Most semiautomatic wire welding processes perform better using constant voltage power sources. Be sure the proper power source is used for your application. Contactor life may be shortened in applications using CC machines with high OCV.**

OPTION BOARD EXPLANATION

There are three optional boards available for the LN-25. The wiring associated with these boards is indicated by dashed lines and the abbreviations are as follows:

JS - Standard Wiring, No Option Boards Installed. This wiring jumper must be installed if remote kit is not present.
JC - Optional Contactor Board.
JR - Optional Remote Board.
JT - Optional Timer Board. If timer kit is not installed, and remote board is not present, then jumper is installed in J11. If remote board is present, then jumper is installed in J6 of remote board.

The Optional Boards are divided on this print for clarity.

PROPRIETARY & CONFIDENTIAL: THIS DOCUMENT CONTAINS PROPRIETARY INFORMATION OWNED BY LINCOLN GLOBAL, INC. AND MAY NOT BE DUPLICATED, COMMUNICATED TO OTHER PARTIES OR USED FOR ANY PURPOSE WITHOUT THE EXPRESS WRITTEN PERMISSION OF LINCOLN GLOBAL, INC.

MANUFACTURING TOLERANCE PER E2659 UNLESS OTHERWISE SPECIFIED TOLERANCE ON 2 PLACE DECIMALS IS ± .02 ON 3 PLACE DECIMALS IS ± .002 ON ALL ANGLES IS ± .5 OF A DEGREE MATERIAL TOLERANCE ("L") TO AGREE WITH PUBLISHED STANDARDS

DO NOT SCALE THIS DRAWING

DESIGN INFORMATION	REFERENCE: G4198-1	EQUIPMENT TYPE: LN-25 (ACROSS THE ARC)	PAGE 1 OF 1
DRAWN BY: M. DIDION		SUBJECT: MACHINE SCHEMATIC	
ENGINEER: M. DIDION	SCALE: NONE		DOCUMENT NUMBER: G5366 / REVISION: A
APPROVED:	MATERIAL DISPOSITION: NA	APPROVAL DATE: 10/4/2004 / PROJECT NUMBER: CRM36946	

SOLID EDGE

NOTE: This diagram is for reference only. It may not be accurate for all machines covered by this manual.

Return to Section TOC
Return to Master TOC

SCHEMATIC - COMPLETE MACHINE - BELOW CODE 9900 ONLY (G1833)

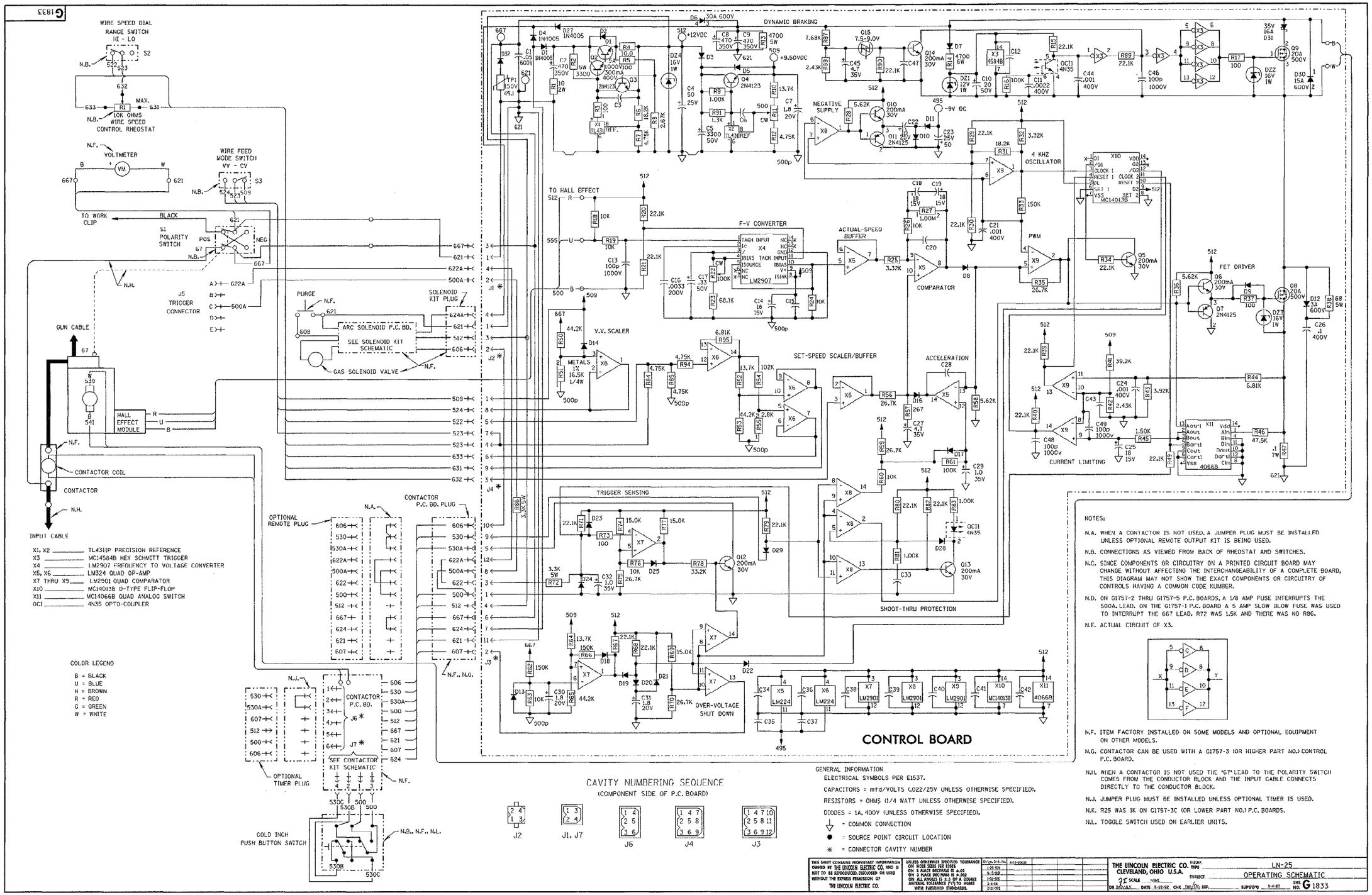

NOTE: This diagram is for reference only. It may not be accurate for all machines covered by this manual.

LINCOLN ELECTRIC

Return to Section TOC
Return to Master TOC

SCHEMATIC - CONTROL PC BD - ABOVE CODE 11140 (G4616-5)

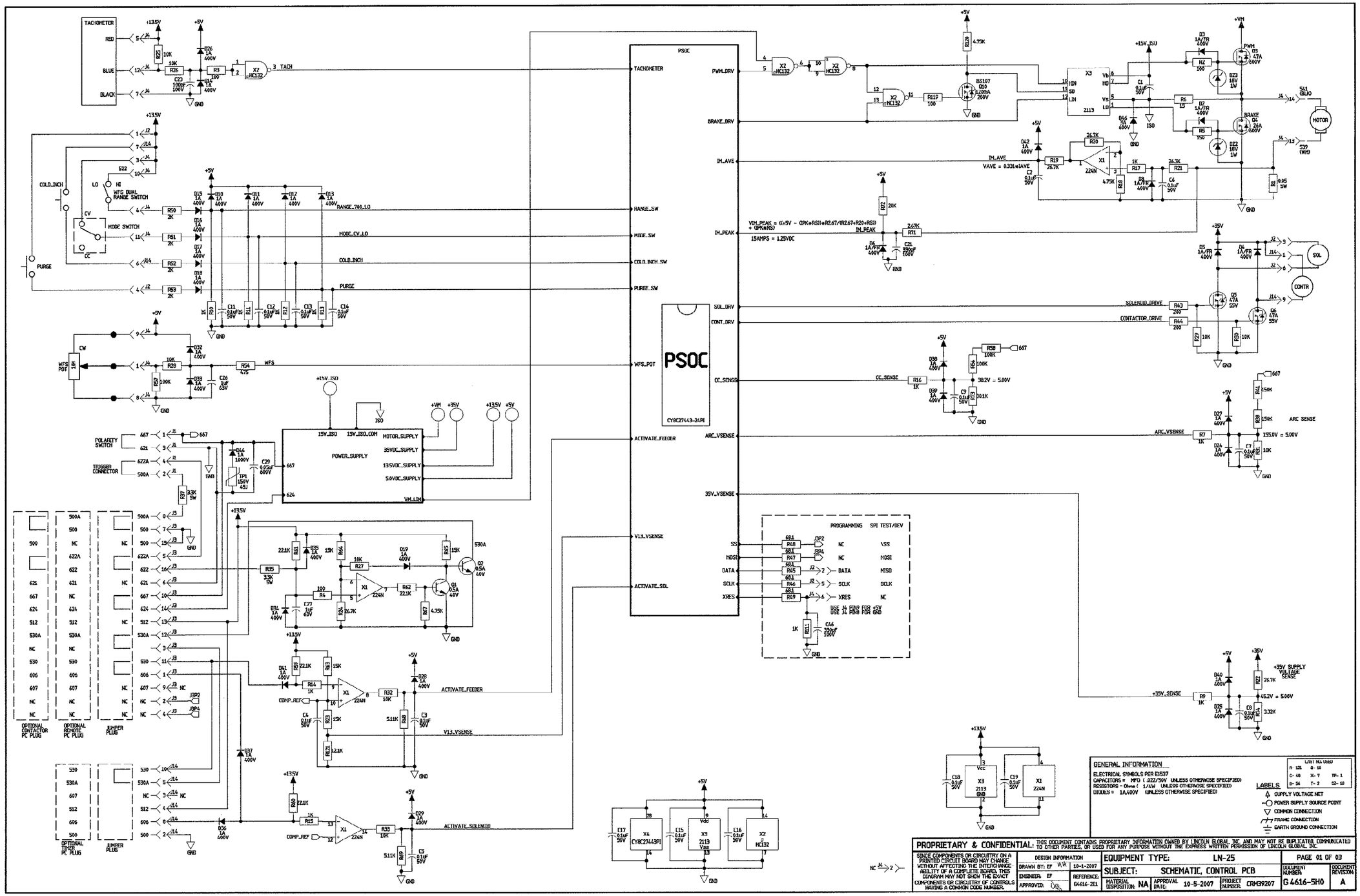

NOTE: This diagram is for reference only. It may not be accurate for all machines covered by this manual.

Return to Section TOC
Return to Master TOC

SCHEMATIC - CONTROL PC BD - CODE 10556 THRU 10558 (G3424-3)

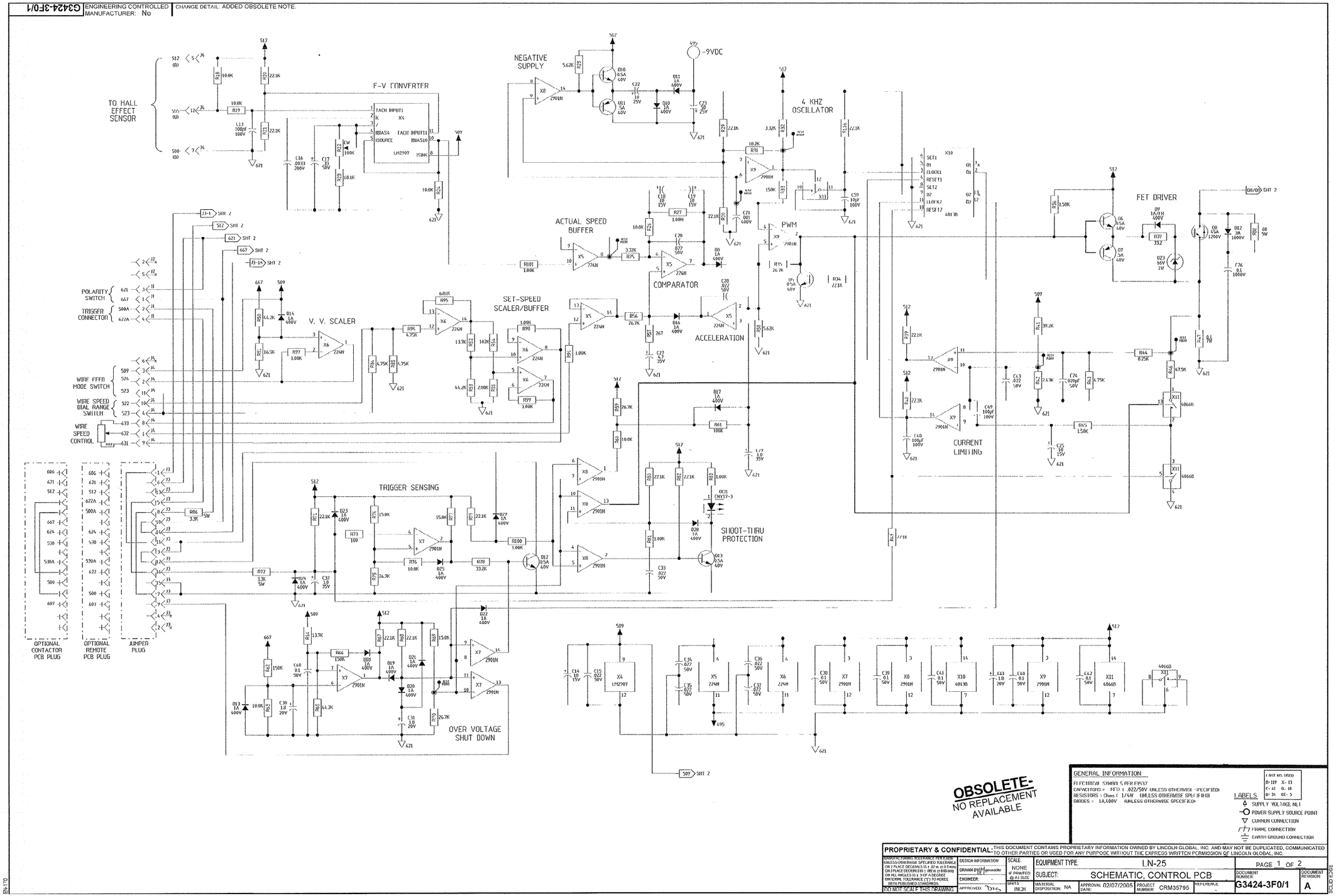

NOTE: This diagram is for reference only. It may not be accurate for all machines covered by this manual.

LINCOLN ELECTRIC

Return to Section TOC
Return to Master TOC

SCHEMATIC - CONTROL PC BD - CODE 10100 THRU 10500 (G2194)

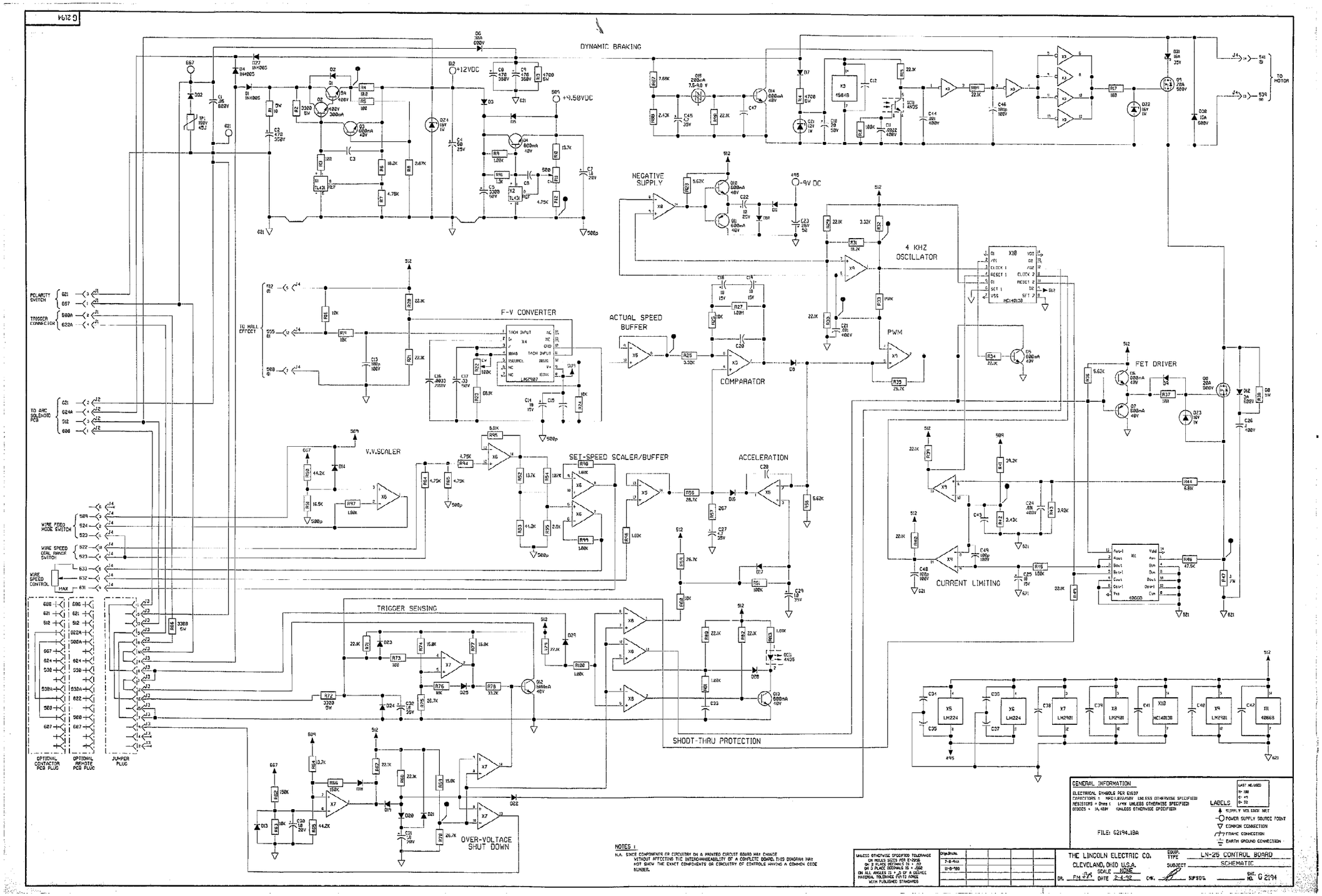

NOTE: This diagram is for reference only. It may not be accurate for all machines covered by this manual.

LINCOLN ELECTRIC

Return to Section TOC
Return to Master TOC

Return to Section TOC
Return to Master TOC

PC BOARD ASSEMBLY - CONTROL - ABOVR CODE 11140 (L12253-3)

L12253-3

ENGINEERING CONTROLLED
MANUFACTURER: No

CHANGE DETAIL:REVISED D48 AND MANUFACTURED PART NUMBER, IDENTIFICATION CODE AND SCHEMATIC REFERENCE

ITEM (USED WITH) *	QTY	PART NUMBER	DESCRIPTION
1	1	L12253-F	PC BOARD BLANK
2	8	S14020-4	PLASTIC EXPANSION NUT, 0.25
3 (Q8) *	1	S20590-1	HEAT SINK,SLIP ON,FOR TO-220
4 (Q3, Q4, D48) *	3	S20590-3	HEAT SINK, EXTRUDED,FOR TO-247
5 (X4)*	1	Y00750-4	SOFTWARE

REFER TO ELECTRONIC COMPONENT DATABASE FOR SPECIFICATIONS ON ITEMS LISTED BELOW

REFERENCES	QTY	PART NUMBER	DESCRIPTION
C1, C2, C3, C4, C5, C6, C7, C8, C9, C10, C11, C12, C13, C14, C15, C16, C17, C18, C19, C33	20	S16668-11	CAPACITOR,CEMO,0.1, 50V,10%
C20, C31	2	S16668-6	CAPACITOR,CEMO,4700pF,50V,10%
C21, C46	2	S16668-8	CAPACITOR,CEMO,330pF,100V,5%
C22, C23, C37	3	S16668-3	CAPACITOR,CEMO,100pF, 100V,5%
C24, C32	2	S16668-9	CAPACITOR,CEMO,150pF, 100V,5%
C26, C27, C47	3	S13490-173	CAPACITOR,PEMF,1.0,63V,10%
C29	1	T11577-46K	CAPACITOR,CD,.05,600V,+80/-20%
C30, C42	2	S20500-16	CAPACITOR,PPMF,0.0033,630V,5%,BOX
C34, C44	2	S13490-199	CAPACITOR,ALEL,220,25V,20%,LOW-ESR
C35, C36, C43	3	S13490-197	CAPACITOR,ALEL,82,35V,20%,LOW-ESR
C38, C39	2	S13490-209	CAPACITOR,ALEL,470,350V,20%
C40	1	S20500-17	CAPACITOR,PPMF,0.1MF,630V,5%,BOX
C41	1	S13490-210	CAPACITOR,ALEL,8200,50V,20%
C45	1	S13490-212	CAPACITOR,ALEL,180,350V,20%
C48	1	S16668-5	CAPACITOR,CEMO,.022,50V,20%
D1, D9, D46, D51	4	T12705-59	DIODE,AXLDS,3A,600V,UFR
D2, D3, D4, D5, D6, D7, D8	7	T12705-34	DIODE,AXLDS,1A,400V,FR,1N4936
D10, D11, D12, D13, D14, D15, D16, D17, D18, D19, D21, D22, D24, D25, D26, D27, D28, D29, D32, D33, D34, D35, D36, D37, D38, D39, D40, D41, D42, D43, D49, D53, D54, D56	34	T12199-1	DIODE,AXLDS,1A,400V
D20, D52	2	T12199-4	DIODE,AXLDS,1A,600V
D44	1	T12199-2	DIODE,AXLDS,1A,1000V
D47, D55	2	T12705-65	DIODE,AXLDS,1A,600V,FR,1N4937
D48	1	T12705-66	DIODE,TO247,30A,600V,UFR
DZ1, DZ2, DZ3, DZ11	4	T12702-45	ZENER DIODE,1W,18V,5%,1N4746A
DZ4, DZ13, DZ14	3	T12702-29	ZENER DIODE,1W,15V,5%,1N4744A
DZ10	1	T12702-50	ZENER DIODE,5W,17V,5%,1N5354B
DZ12	1	T12702-37	ZENER DIODE,1W,43V,5%,1N4755A
DZ15, DZ16, DZ17	3	T12702-38	ZENER DIODE,1W,30V,5%,1N4751A
DZ18	1	T12702-53	ZENER DIODE,1W,3.3V,5%,1N4728A

P.C.BOARD BLANK REFERENCE INFORMATION

BUY COMPLETE AS L12253-F (4 LAYER BOARD PER E3281)

(MAKES 4 BOARDS PER PANEL, SEE ELECTRONIC FILE FOR ADDITIONAL INFORMATION)

PANEL SIZE PER E1911

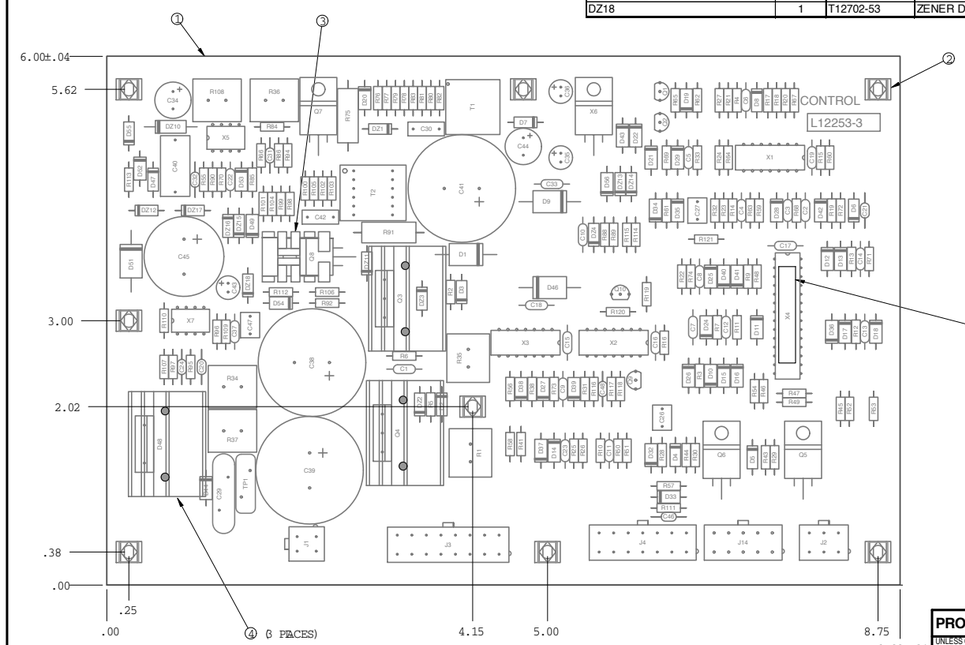

MANUFACTURING MATERIALS
L12253-3F1
IDENTIFICATION CODE

SCHEMATIC REFERENCE G4616-3F1

	ITEM	QTY	PART NUMBER	DESCRIPTION
NA.	1	1	S18248-4	CONNECTOR,MOLEX,MINI,PCB,4-PIN
	2	1	S18248-6	CONNECTOR,MOLEX,MINI,PCB,6-PIN
	3	1	S18248-16	CONNECTOR,MOLEX,MINI,PCB,16-PIN
	4	1	S18248-14	CONNECTOR,MOLEX,MINI,PCB,14-PIN
	14	1	S18248-10	CONNECTOR,MOLEX,MINI,PCB,10-PIN
NB.	1, Q2, Q9	3	T12704-68	TRANSISTOR,NPN,TO226,0.5A,40V,2N4401
		1	T12704-106	TRANSISTOR,NMF,TO247,600V,47A(SS)
	4	1	T12704-102	TRANSISTOR,NMF,TO247,600V,26A(SS)
	Q5, Q6	2	T12704-104	TRANSISTOR,N,TO220,47A,55V,P77N06S2-12(SS)
	Q7, Q8	2	T12704-103	TRANSISTOR,N,TO220,11A,600V,IRFB16N60L(SS)
	D10	1	T12704-101	TRANSISTOR,NMF,TO92,.120A, 200V,BS107(SS)
	1	1	S25365-0R05	RESISTOR,STAND-UP,WW,5W,0.05,5%
	, R3, R4, R119	4	S19400-1000	RESISTOR,MF,1/4W,100,1%
	R5	1	S19400-1500	RESISTOR,MF,1/4W,150,1%
	R6	1	S19400-15R0	RESISTOR,MF,1/4W,15.0,1%
	R7, R9, R10, R11, R12, R13, R14, R15, R16, R17, R70, R97, R111, R112	14	S19400-1001	RESISTOR,MF,1/4W,1.00K,1%
	R18, R67, R118, R120	4	S19400-4751	RESISTOR,MF,1/4W,4.75K,1%
	R19, R20, R21, R22, R24	5	S19400-2672	RESISTOR,MF,1/4W,26.7K,1%
	R23, R63, R64, R65	4	S19400-1502	RESISTOR,MF,1/4W,15.0K,1%
	R25, R26, R27, R28, R29, R30, R31, R32, R33	9	S19400-1002	RESISTOR,MF,1/4W,10.0K,1%
	R34, R36, R108	3	S25923-5101	RESISTOR,STAND-UP,MF,5W,5.1K,5%
	R35, R37	2	S25923-3301	RESISTOR,STAND-UP,MF,5W,3.3K,5%
	R38, R41	2	S19400-1503	RESISTOR,MF,1/4W,150K,1%
	R43, R44	2	S19400-2000	RESISTOR,MF,1/4W,200,1%
	R45, R46, R47, R48, R49	5	S19400-68R1	RESISTOR,MF,1/4W,68.1,1%
	R50, R51, R52, R53	4	S19400-2001	RESISTOR,MF,1/4W,2.00K,1%
	R54	1	S19400-4750	RESISTOR,MF,1/4W,475,1%
	R55, R56, R57, R58, R95	5	S19400-1003	RESISTOR,MF,1/4W,100K,1%
	R59, R60, R61, R62, R94, R109	6	S19400-2212	RESISTOR,MF,1/4W,22.1K,1%
	R66, R96	2	S19400-2211	RESISTOR,MF,1/4W,2.21K,1%
	R68, R69	2	S19400-5111	RESISTOR,MF,1/4W,5.11K,1%
	R71	1	S19400-2671	RESISTOR,MF,1/4W,2.67K,1%
	R72	1	S19400-2002	RESISTOR,MF,1/4W,20.0K,1%
	R73	1	S19400-3012	RESISTOR,MF,1/4W,30.1K,1%
	R74, R86, R92	3	S19400-3321	RESISTOR,MF,1/4W,3.32K,1%
	R75, R91	2	S25831-00R2	RESISTOR,MF,FLAMEPROOF,3W,0.2,5%
	R76, R77, R78, R79, R80, R81, R82, R83, R98, R99, R100, R101, R102, R103, R104, R105	16	S19400-10R0	RESISTOR,MF,1/4W,10.0,1%
	R84, R106	2	S19400-33R2	RESISTOR,MF,1/4W,33.2,1%
	R85	1	S19400-3011	RESISTOR,MF,1/4W,3.01K,1%
	R88, R89, R107	3	S19400-3010	RESISTOR,MF,1/4W,301,1%
	R90	1	S19400-6810	RESISTOR,MF,1/4W,681,1%
	R110	1	S19400-3921	RESISTOR,MF,1/4W,3.92K,1%
	R113	1	S19400-5621	RESISTOR,MF,1/4W,5.62K,1%
	R114, R115	2	S19400-3320	RESISTOR,MF,1/4W,332,1%
	R116	1	S19400-3322	RESISTOR,MF,1/4W,33.2K,1%
	R117	1	S19400-3922	RESISTOR,MF,1/4W,39.2K,1%
	R121	1	S19400-1212	RESISTOR,MF,1/4W,12.1K,1%
	T1	1	S20375-22	TRANSFORMER,PWM,FLYBACK,ICA-1313
	T2	1	S20375-23	TRANSFORMER,PWM,FLYBACK,ICA-1314
	TP1	1	T13640-11K	MOV,150VRMS,45J,14MM
NB.	X1	1	S15128-4	OP-AMP,QUAD, GEN-PURPOSE,224N
NB.	X2	1	S17900-24	IC,CMOS,GATE,NAND,2-INPUT,QUAD,SCHM(SS)
NB.	X3	1	S15018-29	IC,CMOS,DRIVER,MOSFET,2113(SS)
NB.NC.	X4	1	S25073-9	IC,CMOS,PSOC,8-BIT,CY8C27443,DIP-28(SS)
NB	X5, X7	2	M15458-8	IC,PWM-CONTROLLER,IMODE,2843A
NB	X6	1	S15128-5	IC,VOLT REG,FIXED,3-T,(+),1A,5V,TO220

NOTES:

NA. DO NOT COAT WITH ENCAPSULATION MATERIAL.

NB. CAUTION:THIS DEVICE IS SUBJECT TO DAMAGE BY STATIC ELECTRICITY.SEE E2454 BEFORE HANDLING.

NC. PROGRAM X4 PER ITEM 5 AND LABEL X4 WITH PART NUMBER OF ITEM 5.

CAPACITORS = MFD /VOLT
RESISTORS = OHMS

MAKE PER E1911
ENCAPSULATE TWICE WITH E1844
TEST PER E4143-C

FOR PARTS ORDERS:
INCLUDE T13498-21

EN-168

PROPRIETARY & CONFIDENTIAL: THIS DOCUMENT CONTAINS PROPRIETARY INFORMATION OWNED BY LINCOLN GLOBAL, INC. AND MAY NOT BE DUPLICATED, COMMUNICATED TO OTHER PARTIES OR USED FOR ANY PURPOSE WITHOUT THE EXPRESS WRITTEN PERMISSION OF LINCOLN GLOBAL, INC.

UNLESS OTHERWISE SPECIFIED TOLERANCE MANUFACTURING TOLERANCE PER E2056
ON 2 PLACE DECIMALS IS ± .02
ON 3 PLACE DECIMALS IS ± .002
ON ALL ANGLES IS ± .5 OF A DEGREE
MATERIAL TOLERANCE (*L*) TO AGREE WITH PUBLISHED STANDARDS.
DO NOT SCALE THIS DRAWING

DESIGN INFORMATION		REFERENCE:	
DRAWN BY:	FEI	L12253-2	
ENGINEER:	EF	SCALE:	
APPROVED:	-	1:1	

EQUIPMENT TYPE: IN-25
SUBJECT: CONTROL P.C.BOARD ASSEMBLY
MATERIAL DISPOSITION: UP | APPROVAL DATE: 10/2/206 | PROJECT NUMBER: CRM3743 4

PAGE 1 OF 1
DOCUMENT NUMBER: L12253-3
DOCUMENT REVISION: B
SOLID EDGE

NOTE: Lincoln Electric as
vided for reference only. Lincoln Electric discourages board level troubleshooting and repair since it may compromise the quality of the design and may result in danger to the Machine Operator or Technician. Improper PC board repairs could result in damage to the machine.

LINCOLN ELECTRIC

Return to Section TOC
Return to Master TOC

PC BOARD ASSEMBLY - CONTROL - CODE 10556 THRU 10558 (G3425-3)

G3425-3 | ENGINEERING CONTROLLED MANUFACTURER: No | CHANGE DETAIL: ADDED OBSOLETE NOTE WITH PARTS ORDERS INFORMATION AND REMOVED PARTS ORDERS INFORMATION.

P.C. BOARD BLANK REFERENCE INFORMATION
BUY COMPLETE AS G3425-F (4 LAYER BOARD PER E3281)
(MAKES 4 BOARDS PER PANEL, SEE ELECTRONIC FILE FOR ADDITIONAL INFORMATION)
PANEL SIZE PER E1911

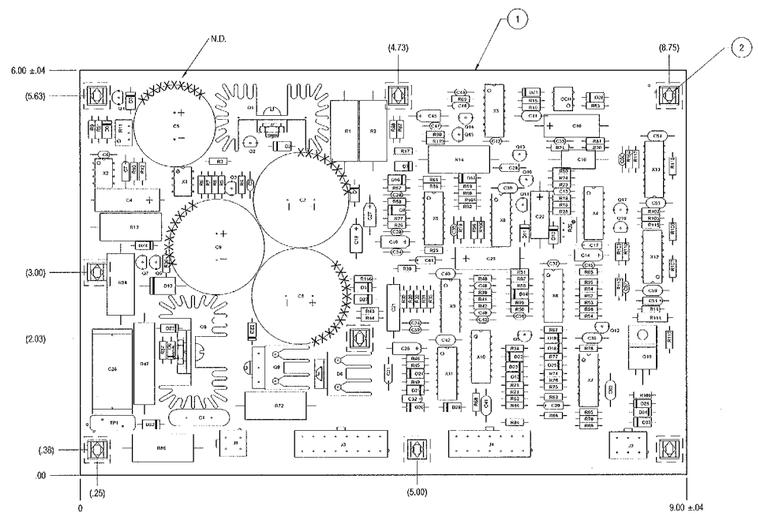

ITEM	REQ'D	PART NO.	DESCRIPTION
1	1	G3425-F	P.C. BOARD BLANK
2	8	S14020-4	EXPANSION NUT
3	.040Z	E2861	SEALANT

SCHEMATIC REFERENCE G3424-3E0

MANUFACTURER'S
G3425-3E0
IDENTIFICATION CODE

MAKE PER E1911
ENCAPSULATE WITH E1844
TEST PER E2747-C

CAPACITORS = MFD/VOLTS
RESISTORS = OHMS

Notes:

N.A. DO NOT COAT WITH ENCAPSULATION MATERIAL.

N.B. CAUTION: THIS DEVICE IS SUBJECT TO DAMAGE BY STATIC ELECTRICITY. SEE E2454 BEFORE HANDLING.

N.D. ANCHOR ITEMS C2, C5, C8 AND C9 TO BOARD WITH .25 WIDE, .50 LONG BEAD OF ITEM "5".

OBSOLETE-
FOR PARTS ORDERS:
SEND M20633 CONTROL
PCB REPLACEMENT KIT

	ITEM	REQ'D	PART NO.	DESCRIPTION
	C1	1	T11577-46	CAPACITOR,CD,.05,600V,+80/-20%
	C2,C8,C9	3	S13490-106	CAPACITOR,ALEL,470,350V,+30/-20%
	C3,C6,C12,C15,C20,C28,C33	13	S16668-5	CAPACITOR,CEMO,.022, 50V,20%
	C34,C35,C36,C37,C43,C47			
	C4,C23	2	S13490-8	CAPACITOR,ALEL,50,25V,+75/-10%
	C5	1	S13490-92	CAPACITOR,ALEL,3300, 50V,+30/-10%
	C7,C30,C31,C61	4	S13490-19	CAPACITOR,TAEL,1.8,20V,10%
	C10	1	S13490-73	CAPACITOR,ALEL,20,50V,+75/-10%
	C11,C56	2	S16668-4	CAPACITOR,CEMO, 2700PF, 50V,5%
	C13,C46,C48,C49	4	S16668-3	CAPACITOR,CEMO,100P, 100V,5%
	C14,C18,C19,C25	4	S13490-39	CAPACITOR,TAEL,18,15V 10%
	C16	1	S13490-62	CAPACITOR,PCF,.0033,200V,10%
	C17	1	S13490-95	CAPACITOR,TAEL,.33,50V,10%
	C21	1	S13490-76	CAPACITOR,PEF,.001,400V,10%
	C22	1	S13490-12	CAPACITOR,ALEL,10,25V,+75/-10%
	C24,C44,C57	3	S16668-7	CAPACITOR,CEMO,820p,50V,5%
	C26	1	S20500-1	CAPACITOR,PPMF,0.1,1000V,10%,BOX
	C27,C45	2	S13490-25	CAPACITOR,TAEL,4.7,35V 10%
	C29,C32,C51	3	S13490-42	CAPACITOR,TAEL,1.0,35V,10%
	C38,C39,C40,C41,C42,C53	8	S16668-11	CAPACITOR,CEMO,0.1, 50V,10%
	C54,C60			
	C50	1	S16668-6	CAPACITOR,CEMO,4700p,50V,10%
	C59	1	S16668-13	CAPACITOR,CEMO,10p,100V,10%
	D1,D4,D27	3	T12199-4	DIODE,AXLDS,1A,600V
	D2,D3,D5,D7,D8,D10,D11,D13	22	T12199-1	DIODE,AXLDS,1A,400V
	D14,D16,D17,D18,D19,D20			
	D21,D22,D23,D24,D25,D28			
	D29,D33			
	D6	1	S18395-32	DIODE,T220,25A,400V,WITH S18104-3HS
	D9,D34	2	T12705-34	DIODE,AXLDS,1A,400V,FR,1N4936
	D12	1	T12705-46	DIODE,AXLDS,3A,1000V
	D32	1	T12199-2	DIODE,AXLDS,1A,1000V
	DZ1	1	T12702-19	ZENER DIODE, 1W,12V,5% 1N4742A
	DZ2,DZ3,DZ4,DZ5	4	T12702-11	ZENER DIODE, 1W,16V,5% 1N4745A
N.A.	J1	1	S18248-4	CONNECTOR,MOLEX,MINI,PCB,4-PIN
N.A.	J2	1	S18248-6	CONNECTOR,MOLEX,MINI,PCB,6-PIN
N.A.	J3	1	S18248-16	CONNECTOR,MOLEX,MINI,PCB,16-PIN
N.A.	J4	1	S18248-14	CONNECTOR,MOLEX,MINI,PCB,14-PIN
N.A.	OCI1	1	S15000-10	OPTOCOUPLER,PHOTO-Q,70V,CNY17-3
	Q1	1	S18105-3	TRANSISTOR,N,T220,5A, 1000V,MJE18004& S18104-1HS
	Q2	1	T12704-55	TRANSISTOR,NPN,TO226,0.3A, 400V,MPS-A44
	Q3,Q4,Q5,Q6,Q10,Q12,Q13	9	T12704-68	TRANSISTOR,NPN,TO226,0.5A,40V,2N4401
	Q14,Q16			
	Q7,Q11,Q17	3	T12704-69	TRANSISTOR,PNP,TO226,0.5A, 40V,2N4403
N.B.	Q8	1	S18397-3	TRANSISTOR,IGBT,T247,1200V,45A,FAST(SS) WITH S1
N.B.	Q9	1	S18395-33	TRANSISTOR,IGBT,T247,1200V,45A,FAST(SS)
	Q15	1	S20630-1	SBS, TO226,7.5-9.0V,MBS4993
N.B.	Q18	1	T12704-72	TRANSISTOR,NMF,T220,8A, 500V,IRF840(SS)
	R1	1	T14648-25	RESISTOR,WW,5W,10.5%,SQ
	R2,R72,R86	3	T14648-5	RESISTOR,WW,5W,3.3K,5%,SQ
	R3,R5,R17,R73,R109	5	S19400-1000	RESISTOR,MF,1/4W,100,1%
	R4,R119	2	S19400-10R0	RESISTOR,MF,1/4W,10.0,1%
	R6	1	S19400-3012	RESISTOR,MF,1/4W,30.1K,1%
	R7,R95	2	S19400-6811	RESISTOR,MF,1/4W,6.81K,1%
	R8,R113	2	S19400-2671	RESISTOR,MF, 1/4W,2.67K,1%
	R9,R81,R83,R96,R97,R98,R99	10	S19400-1001	RESISTOR,MF,1/4W,1.00K,1%
	R100,R101,R111			
	R10,R52,R64	3	S19400-1372	RESISTOR,MF,1/4W,13.7K,1%
	R11	1	S16296-3	TRIMMER,MT,1/2W,500, 10%,LINEAR
	R12,R43,R84,R85,R94	5	S19400-4751	RESISTOR,MF,1/4W,4.75K,1%
	R13,R14	2	T14648-11	RESISTOR,WW,5W,4.7K,5%,SQ
	R15,R20,R21,R29,R30,R34	23	S19400-2212	RESISTOR,MF,1/4W,22.1K,1%
	R39,R40,R49,R67,R68,R71			
	R79,R80,R82,R89,R90,R102			
	R104,R105,R106,R115,R116			
	R16,R61,R107	3	S19400-1003	RESISTOR,MF,1/4W,100K,1%
	R18,R19,R24,R26,R60,R63	7	S19400-1002	RESISTOR,MF,1/4W,10.0K,1%
	R76			
	R22	1	S16296-2	TRIMMER,MT,1/2W,100K, 10%,LINEAR
	R23	1	S19400-6812	RESISTOR,MF,1/4W,68.1K,1%
	R25,R32	2	S19400-3321	RESISTOR,MF,1/4W,3.32K,1%
	R27	1	S19400-1004	RESISTOR,MF,1/4W,1.00M,1%
	R28,R58,R108	3	S19400-5621	RESISTOR,MF,1/4W,5.62K,1%
	R31	1	S19400-1822	RESISTOR,MF,1/4W,18.2K,1%
	R33,R62,R66	3	S19400-1503	RESISTOR,MF,1/4W,150K,1%
	R35,R56,R59,R70,R75	5	S19400-2672	RESISTOR,MF,1/4W,26.7K,1%
	R36,R45	2	S19400-1501	RESISTOR,MF,1/4W,1.50K,1%
	R37	1	S19400-33R2	RESISTOR,MF,1/4W,33.2,1%
	R38	1	T14648-18	RESISTOR,WW,5W,68.5%,SQ
	R41	1	S19400-3922	RESISTOR,MF,1/4W,39.2K,1%
	R42,R88	2	S19400-2431	RESISTOR,MF,1/4W,2.43K,1%
	R44	1	S19400-8251	RESISTOR,MF,1/4W,8.25K,1%
	R46	1	S19400-4752	RESISTOR,MF,1/4W,47.5K,1%
	R47	1	T12300-77	RESISTOR,WW,7W,0.1,1%
	R50,R53,R65	3	S19400-4422	RESISTOR,MF,1/4W,44.2K,1%
	R51	1	S19400-1652	RESISTOR,MF,1/4W,16.5K,1%
	R54	1	S19400-1023	RESISTOR,MF,1/4W,102K,1%
	R55	1	S19400-2801	RESISTOR,MF,1/4W,2.80K,1%
	R57	1	S19400-2670	RESISTOR,MF,1/4W,267,1%
	R69,R74,R77	3	S19400-1502	RESISTOR,MF,1/4W,15.0K,1%
	R78,R110	2	S19400-3322	RESISTOR,MF,1/4W,33.2K,1%
	R87	1	S19400-7681	RESISTOR,MF,1/4W,7.68K,1%
	R91	1	S19400-1301	RESISTOR,MF,1/4W,1.30K,1%
	R112	1	S19400-1821	RESISTOR,MF,1/4W,1.82K,1%
	R114	1	T12300-79	RESISTOR,WW, 1W,1.0,1%
	R117,R118	2	S19400-4750	RESISTOR,MF,1/4W,475,1%
	TP1	1	T13640-11	MOV,150VRMS,45J,14MM
	X1,X2	2	S15128-10	VOLTAGE REF,ADJ, PRECISION,431I
N.B.	X3	1	S15018-4	IC,CMOS,INVERTER,SCHMITT, HEX,4584(SS)
	X4	1	M13552-2	IC,CONVERTER,F/V,2907
	X5,X6	2	S15128-4	OP-AMP,QUAD, GEN-PURPOSE,224N
	X7,X8,X9,X12	4	S15128-11	IC,COMPARATOR,QUAD,2901N
N.B.	X10	1	S15018-10	IC,CMOS,FLIP-FLOP,"D",DUAL,4013(SS)
N.B.	X11	1	S15018-6	IC,CMOS,SWITCH,ANALOG,QUAD, 4066(SS)
N.B.	X13	1	S15018-9	IC,CMOS,MULTIVBRTR,MONO_DUAL_4538(SS)

PROPRIETARY & CONFIDENTIAL: THIS DOCUMENT CONTAINS PROPRIETARY INFORMATION OWNED BY LINCOLN GLOBAL, INC. AND MAY NOT BE DUPLICATED, COMMUNICATED TO OTHER PARTIES OR USED FOR ANY PURPOSE WITHOUT THE EXPRESS WRITTEN PERMISSION OF LINCOLN GLOBAL, INC.

MANUFACTURING TOLERANCE PER E2056 UNLESS OTHERWISE SPECIFIED TOLERANCE ON 2 PLACE DECIMALS IS ± .02 in. (± 0.5 mm) ON 3 PLACE DECIMALS IS ± .002 in. (± 0.05 mm) ON ALL ANGLES IS ± 5 OF A DEGREE MATERIAL TOLERANCE ("1") TO AGREE WITH PUBLISHED STANDARDS
DO NOT SCALE THIS DRAWING

DESIGN INFORMATION
DRAWN BY: bwilliam
ENGINEER:
APPROVED: -

SCALE: NONE
IF PRINTED @ A1 SIZE
UNITS: INCH

EQUIPMENT TYPE: LN-25
SUBJECT: CONTROL P.C. BOARD
MATERIAL DISPOSITION: UF
APPROVAL DATE: 2/7/2005
PROJECT NUMBER: CRM35795
REFERENCE: -

PAGE 1 OF 1
DOCUMENT NUMBER: G3425-3
DOCUMENT REVISION: B

SOLID EDGE

NOTE: Lincoln Electric assumes no responsibility for liablilities resulting from board level troubleshooting. PC Board repairs will invalidate your factory warranty. **Individual Printed Circuit Board Components are not available from Lincoln Electric.** This information is provided for reference only. Lincoln Electric discourages board level troubleshooting and repair since it may compromise the quality of the design and may result in danger to the Machine Operator or Technician. Improper PC board repairs could result in damage to the machine.

PC BOARD ASSEMBLY - CONTROL - CODE 10100 THRU 10500 (G2196-1)

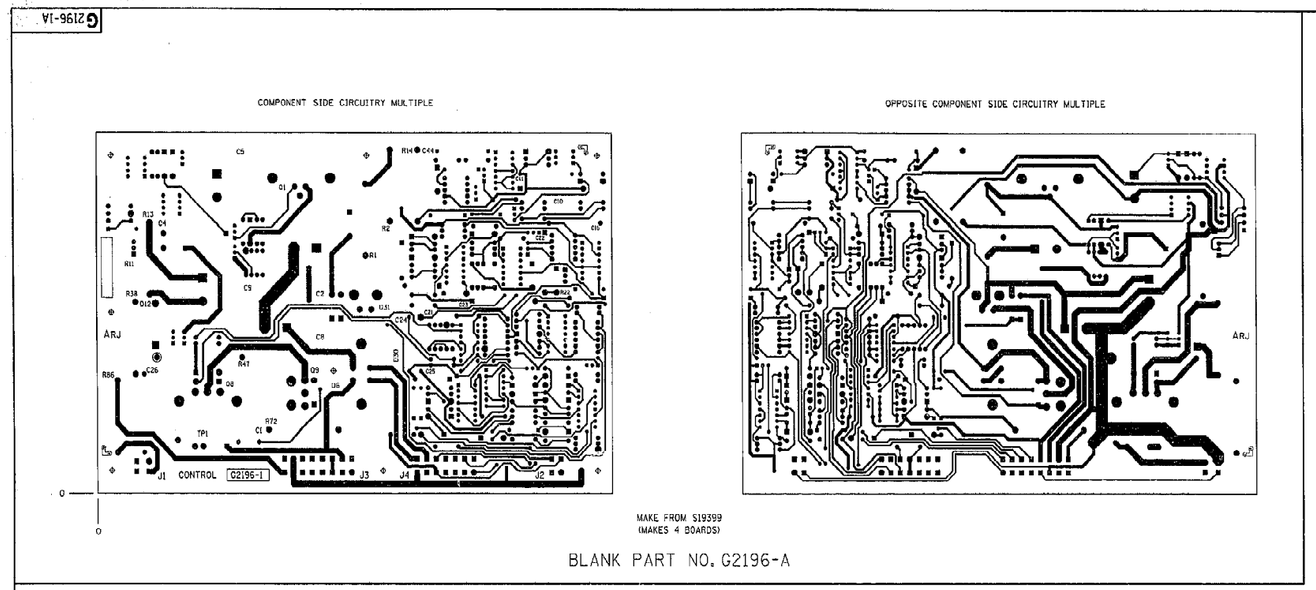

	ITEM	REQ'D	PART NO.	DESCRIPTION
	C1	1	T11577-46	.05/600V
	C2,C8,C9	3	S13490-106	470/350V
	C3,C6,C12,C15,C20,C29 C33,C34,C35,C36,C37,C38 C39,C40,C41,C42,C43,C47	18	S16668-5	.022/50
	C4,C23	2	S13490-6	50/25
	C5	1	S13490-92	3300/50
	C7,C30,C31	3	S13490-19	1.0/20
	C10	1	S13490-73	20/50
	C11	1	S13490-77	.0022/400
	C13,C46,C48,C49	4	S16668-3	100PF/100
	C14,C18,C19,C25	4	S13490-39	18/15
	C16	1	S13490-82	.0033/200
	C17	1	S13490-95	.33/50
	C21,C24,C44	3	S13490-76	.001/400
	C22	1	S13490-12	10/25
	C26	1	T11577-57	0.1/400
	C27,C45	2	S13490-25	4.7/35
	C28,C32	2	S13490-42	1.0/35
	D1,D4,D27	3	T12199-4	1N4005 DIODE
	D2,D3,D5,D7,D8,D9,D10 D11,D13,D14,D16,D17,D18 D19,D20,D21,D22,D23,D24 D25,D28,D29,D32	23	T12199-1	1N4004
N.C.	D6,D30	1	S19105	DIODE AND HEATSINK AS'BLY
	D12	1	T12705-29	DIODE
N.C.	D31	1	S19395-1	DIODE & H.S. AS'MBLY
	D21	1	T12702-19	1N4742A
	D22,D23,D24	3	T12702-11	1N4745A
N.A.	J1,J2	2	S18248-4	HEADER
	J3	1	S18248-16	HEADER
	J4	1	S19248-14	HEADER
	Q11	1	S15602-9	4N39
N.C.	Q1	1	S19105-3	TRANS. AND H.S. AS'MBLY
	Q2	1	T12724-55	TRANSISTOR
	Q3,Q4,Q5,Q6,Q10,Q12,Q13 Q14	8	T12724-68	2N4401
	Q7,Q11	2	T12724-69	2N4403
N.B., N.C.	Q8	1	S19397-2	TRANS. & H.S. AS'MBLY S.S.
	Q9	1	S19395-6	H.S. ASSLY (SS)
	Q15	1	S20630-1	SCR
	R1	1	T14648-25	18 5W
	R2,R72,R90	3	T14640-5	3.3K 5W
	R3,R5,R17,R37,R73	5	S19400-1000	100 1/4W
	R4	1	S19400-1080	10 1/4W
	R6,R31	2	S19400-1822	18.2K 1/4W
	R7,R12,R84,R85,R94	5	S19400-4751	4.75K
	R8	1	S19400-2671	2.67K 1/4W
	R9,R81,R83,R96,R97,R98 R99,R100	8	S19400-1001	1K 1/4W
	R10,R52,R64	3	S19400-1372	13.7K 1/4W
	R11	1	S16296-3	500 1/2W TRIMMER
	R13,R14	2	T14648-11	4700 OHM 5W. RESISTOR
	R15,R20,R21,R29,R30,R34 R39,R40,R49,R67,R68,R71 R79,R80,R82,R89,R90	17	S19400-2212	22.1K 1/4W
	R16,R61	2	S19400-1003	100K 1/4W
	R18,R19,R24,R26,R60,R63 R76	7	S19400-1002	10K 1/4W
	R22	1	S16296-2	100K OHM TRIMMER
	R23	1	S19400-6812	68.1K 1/4W
	R25,R32	2	S19400-3321	3.32K 1/4W
	R27	1	S19400-1004	1M 1/4W
	R28,R36,R58	3	S19400-5621	5.62K 1/4W
	R33,R62,R66	3	S19400-1503	150K 1/4W
	R35,R56,R59,R70,R75	5	S19400-2672	26.7K 1/4W
	R38	1	T14648-18	68 5W
	R41	1	S19400-3922	39.2K 1/4W
	R42,R88	2	S19400-2431	2.43K 1/4W
	R43	1	S19400-3921	3.92K 1/4W
	R44,R95	2	S19400-6811	6.81K 1/4W
	R45	1	S19400-1501	1.5K 1/4W
	R46	1	S19400-4752	47.5K 1/4W
	R47	1	T12302-77	0.1 OHMS/7WATT WIRE WOUND
	R50,R53,R65	3	S19400-4422	44.2K 1/4W
	R51	1	S19400-1652	16.5K 1/4W
	R54	1	S19400-1023	102K 1/4W
	R55	1	S19400-2001	2.0K 1/4W
	R57	1	S19400-2670	267 1/4W
	R69,R74,R77	3	S19400-1502	15K 1/4W
	R78	1	S19400-3322	33.2K 1/4W
	R87	1	S19400-7681	7.68K 1/4W
	R91	1	S19400-1301	1.3K 1/4W
	TP1	1	T13640-11	45J
	X1,X2	2	S15128-10	VOLTAGE REF.
N.B.	X3	1	S15010-4	MC14584 (SS)
	X4	1	M13502-2	FREQ. TO VOLTAGE CONVERTER
	X5,X6	2	S15128-4	LM224 OP-AMP
	X7,X8,X9	3	S15128-11	14 PIN QUAD COMPARATOR
N.D.	X10	1	S15010-10	14 PIN I.C. (SS)
	X11	1	S15010-6	DIGITAL INTEGRATED CIRCUIT (SS)

NOTES:

N.A. DO NOT COAT WITH ENCAPSULATION MATERIAL.
N.B. CAUTION: THIS DEVICE IS SUBJECT TO DAMAGE BY STATIC ELECTRICITY. SEE E2454 BEFORE HANDLING.
N.C. HEAT SINK PIN SOLDER CONNECTIONS (2 PER HEAT SINK) SHALL BE BUILT UP SUCH THAT THE SOLDER EXTENDS FROM THE PAD DIAMETER UP THE PIN AT A MINIMUM ANGLE OF 45 DEGREES.
N.D. ANCHOR ITEMS C2,C5,C8 AND C9 TO BOARD WITH .25 WIDE, .50 LONG BEAD OF ITEM (3).

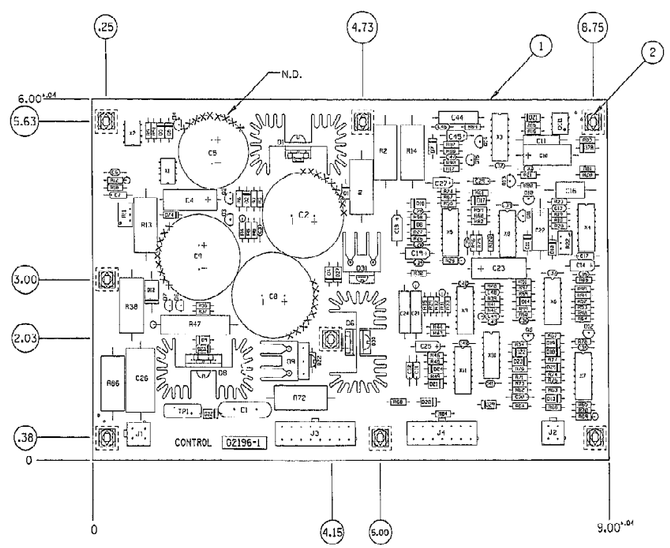

MAKE PER E1911
ENCAPSULATE WITH E1844
TEST PER E2747-C

MANUFACTURED AS
G2196-1A0
IDENTIFICATION CODE

FOR MATCHOUT ONLY

	ITEM	REQ'D	PART NO.	DESCRIPTION
	1	1	G2196-A	P.C. BOARD BLANK
N.A.	2	8	S14020-4	EXPANSION NUT
	3	.04 OZ	E2861	SEALANT

CAPACITORS = MFD/VOLTS
RESISTORS = OHMS

FOR PARTS ORDERS:
INCLUDE T13498-21

THIS SHEET CONTAINS PROPRIETARY INFORMATION OWNED BY THE LINCOLN ELECTRIC CO. AND IS NOT TO BE REPRODUCED, DISCLOSED OR USED WITHOUT THE EXPRESS PERMISSION OF THE LINCOLN ELECTRIC CO.

UNLESS OTHERWISE SPECIFIED TOLERANCE ON WHOLE SIZES PER E8855
ON 2 PLACE DECIMALS IS ±.02
ON 3 PLACE DECIMALS IS ±.005
ON ALL ANGLES IS ±.5 OR AS DEGREE MATERIAL TOLERANCE (FYI) TO AGREE WITH PUBLISHED STANDARDS.

Drlns. Sht. No. 11-8-562

THE LINCOLN ELECTRIC CO.
CLEVELAND, OHIO U.S.A.

EQUIP TYPE LN-25
SUBJECT CONTROL P.C. BOARD
SCALE FULL
DR. B.Y. DATE 5-3-84 CHK. DATE REV.
SUPSTDG G1554-6 REV. NO. G 2196-1A

Return to Section TOC
Return to Master TOC

PC BOARD ASSEMBLY - CONTROL - BELOW CODE 9900 (G1757-6)

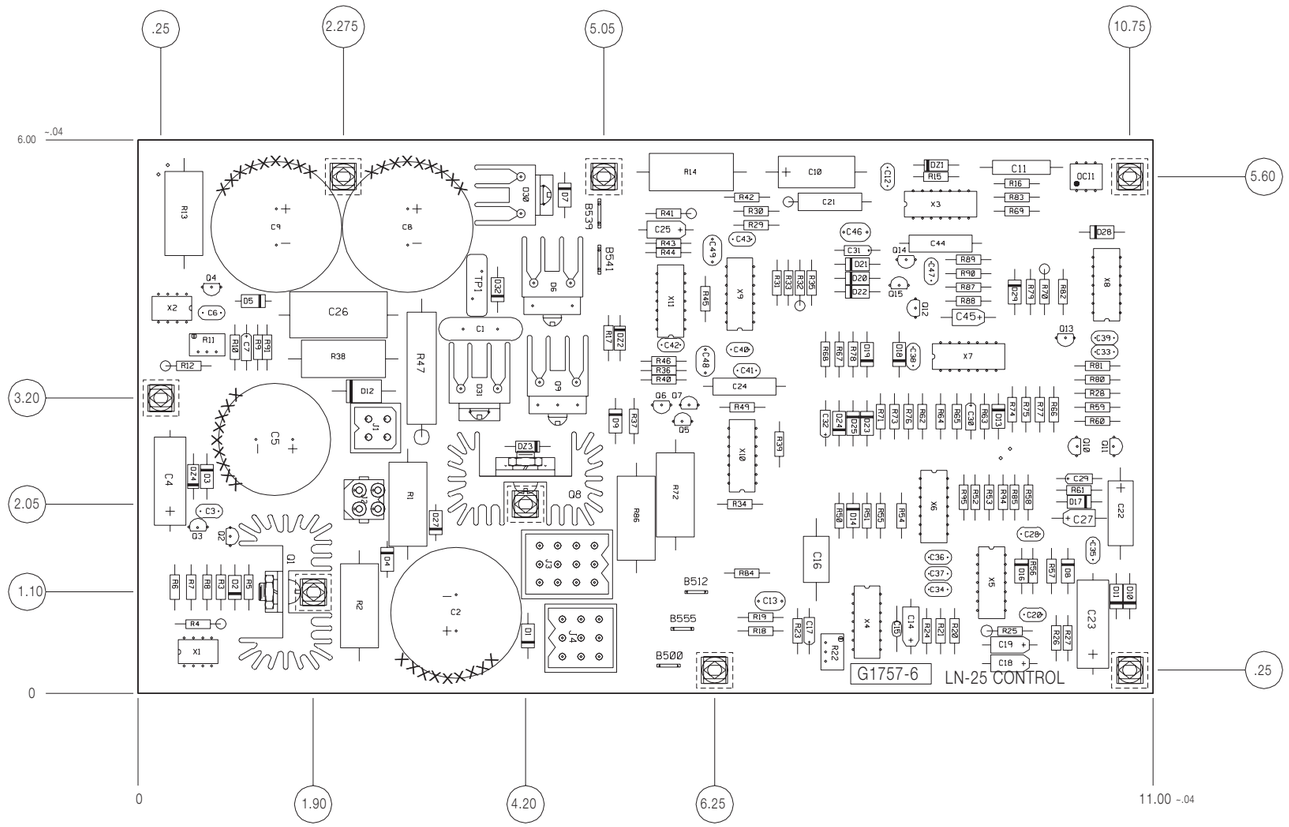

ITEM	REQ'D	PART NO.	DESCRIPTION
B500, B512, B555	3	T13157-15	TAB TERMINAL
B539, B541	2	T13157-14	TAB TERMINAL
C1	1	T11577-46	.05/600V
C2, C8, C9	3	S13490-106	470/350V
C3, C6, C12, C20, C28, C33, C34 C35, C36, C37, C38, C39, C40 C41, C42, C43, C47	17	T11577-40	.022 MFD, 25 VDC CAPACITOR
C4, C23	2	S13490-8	50/25
C5	1	S13490-92	3300/50
C7, C30, C31	3	S13490-19	1.8/20
C10	1	S13490-73	20/50
C11	1	S13490-77	.0022/400
C13, C46, C48, C49	4	T11577-51	100pf/1000
C14, C18, C19, C25	4	S13490-39	18/15
C15	1	S16668-5	.022/50
C16	1	S13490-62	.0033/200
C17	1	S13490-95	.33/50
C21, C24, C44	3	S13490-76	.001/400
C22	1	S13490-12	10/25
C26	1	T11577-57	0.1/400
C27, C45	2	S13490-25	4.7/35
C29, C32	2	S13490-42	1.0/35
D1, D4, D27	3	T12199-4	1N4005 DIODE
D2, D3, D5, D7, D8, D9, D10, D11 D13, D14, D16, D17, D18, D19 D20, D21, D22, D23, D24, D25 D28, D29, D32	23	T12199-1	1N4004
D6	1	S18395-29	DIODE & HEAT SINK ASSEMBLY
D12	1	T12705-29	DIODE
D30	1	S18395-14	DIODE & HEAT SINK ASSEMBLY
D31	1	S18395-1	DIODE & HEAT SINK ASSEMBLY
DZ1	1	T12702-19	1N4742A
DZ2, DZ3, DZ4	3	T12702-11	1N4745A
J1	1	T13160-134	4 PIN FEMALE RECEPTACLE
J2	1	T13160-135	4 PIN MALE RECEPTACLE
J3	1	T13160-49	12 PIN FEMALE RECEPTACLE
J4	1	T13160-3	9 PIN FEMALE RECEPTACLE
OC1	1	S15000-9	4N35
Q1	1	S18105-3	TRANSISTOR & HEAT SINK ASSEMBLY
Q2	1	T12704-55	TRANSISTOR
Q3, Q4, Q5, Q6, Q10, Q12, Q13 Q14	8	T12704-68	2N4401
Q7, Q11	2	T12704-69	2N4403
Q8	1	S18397-2	TRANSISTOR & HEAT SINK ASBLY (SS)
Q9	1	S18395-6	TRANSISTOR & HEAT SINK ASBLY (SS)
Q15	1	S20630-1	SBS
R1	1	T14648-25	10 5W
R2, R72, R86	3	T14648-5	3.3K 5W
R3, R5, R17, R37, R73	5	S19400-1000	100 1/4W
R4	1	S19400-10R0	10 1/4W
R6, R31	2	S19400-1822	18.2K 1/4W
R7, R12, R84, R85, R94	5	S19400-4751	4.75K
R8	1	S19400-2671	2.67K 1/4W
R9, R81, R83	3	S19400-1001	1K 1/4W
R10, R52, R64	3	S19400-1372	13.7K 1/4W
R11	1	S16296-3	500 1/2W TRIMMER
R13, R14	2	T14648-11	4700 OHM 5W. RESISTOR
R15, R20, R21, R29, R30, R34 R39, R40, R49, R67, R68, R71 R79, R80, R82, R89, R90	17	S19400-2212	22.1K 1/4W
R16, R61	2	S19400-1003	100K 1/4W
R18, R19, R24, R26, R60, R63 R76	7	S19400-1002	10K 1/4W
R22	1	S16296-2	100K OHM TRIMMER
R23	1	S19400-6812	68.1K 1/4W
R25, R32	2	S19400-3321	3.32K 1/4W
R27	1	S19400-1004	1M 1/4W
R28, R36, R58	3	S19400-5621	5.62K 1/4W
R33, R62, R66	3	S19400-1503	150K 1/4W
R35, R56, R59, R70, R75	5	S19400-2672	26.7K 1/4W
R38	1	T14648-18	68 5W
R41	1	S19400-3922	39.2K 1/4W
R42, R88	2	S19400-2431	2.43K 1/4W
R43	1	S19400-3921	3.92K 1/4W
R44, R95	2	S19400-6811	6.81K 1/4W
R45	1	S19400-1501	1.5K 1/4W
R46	1	S19400-4752	47.5K 1/4W
R47	1	T12300-77	0.1 OHMS/7WATT WIRE WOUND
R50, R53, R65	3	S19400-4422	44.2K 1/4W
R51	1	S19400-1652	16.5K 1/4W
R54	1	S19400-1023	102K 1/4W
R55	1	S19400-2801	2.8K 1/4W
R57	1	S19400-2670	267 1/4W
R69, R74, R77	3	S19400-1502	15K 1/4W
R78	1	S19400-3322	33.2K 1/4W
R87	1	S19400-7681	7.68K 1/4W
R91	1	S19400-1301	1.3K 1/4W
TP1	1	T13640-11	45J
X1, X2	2	S15128-10	VOLTAGE REF.
X3	1	S15018-4	MC14584 (SS)
X4	1	M13552-2	FREQ. TO VOLTAGE CONVERTER
X5, X6	2	S15128-4	LM224 OP-AMP
X7, X8, X9	3	S15128-11	14 PIN QUAD COMPARATOR
X10	1	S15018-10	14 PIN I.C. (SS)
X11	1	S15018-6	DIGITAL INTEGRATED CIRCUIT (SS)

CAPACITORS = MFD/VOLTS
RESISTORS = OHMS

CH'GE. SYY. NO.
9-13-99B
1-31-96E
3-4-94
3-17-93B
7-21-93

THE LINCOLN ELECTRIC CO.
CLEVELAND, OHIO U.S.A.
SCALE FULL
DR. FM DATE 1-21-94 CHK REF. SUP'S'D'G 8-23-91
EQUIP. TYPE LN-25
SUBJECT CONTROL P.C. BOARD
SHT. NO. G 1757-6

NOTE: Lincoln Electric assumes no responsibility for liablilities resulting from board level troubleshooting. PC Board repairs will invalidate your factory warranty. **Individual Printed Circuit Board Components are not available from Lincoln Electric.** This information is provided for reference only. Lincoln Electric discourages board level troubleshooting and repair since it may compromise the quality of the design and may result in danger to the Machine Operator or Technician. Improper PC board repairs could result in damage to the machine.

Return to Section TOC
Return to Master TOC

SCHEMATIC - CONTACTOR PC BD - ABOVE CODE 10500 (M10965)

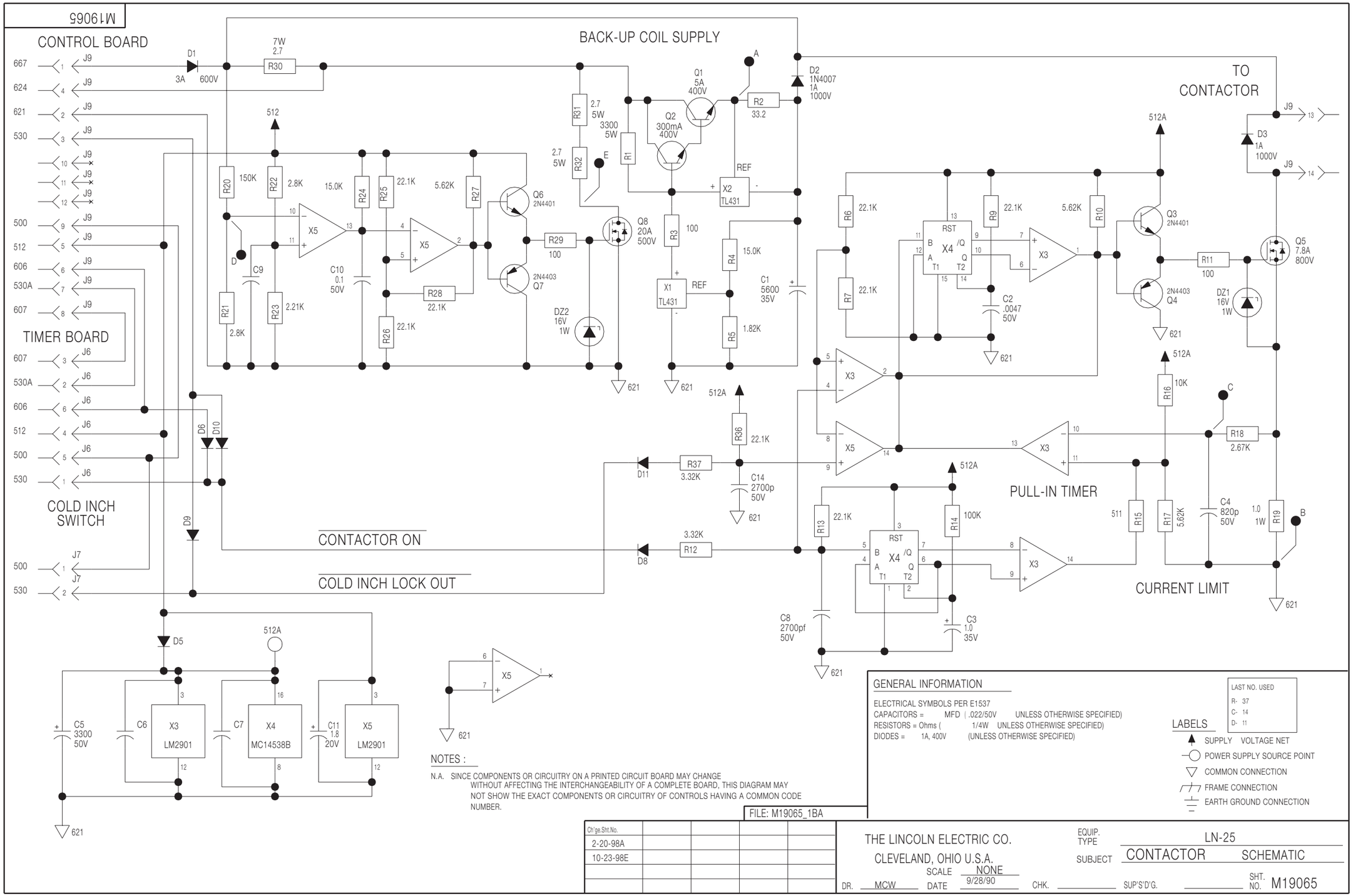

NOTE: This diagram is for reference only. It may not be accurate for all machines covered by this manual.

Return to Section TOC
Return to Master TOC

SCHEMATIC - CONTACTOR PC BD - CODE 10100 THRU 10500 (M17621)

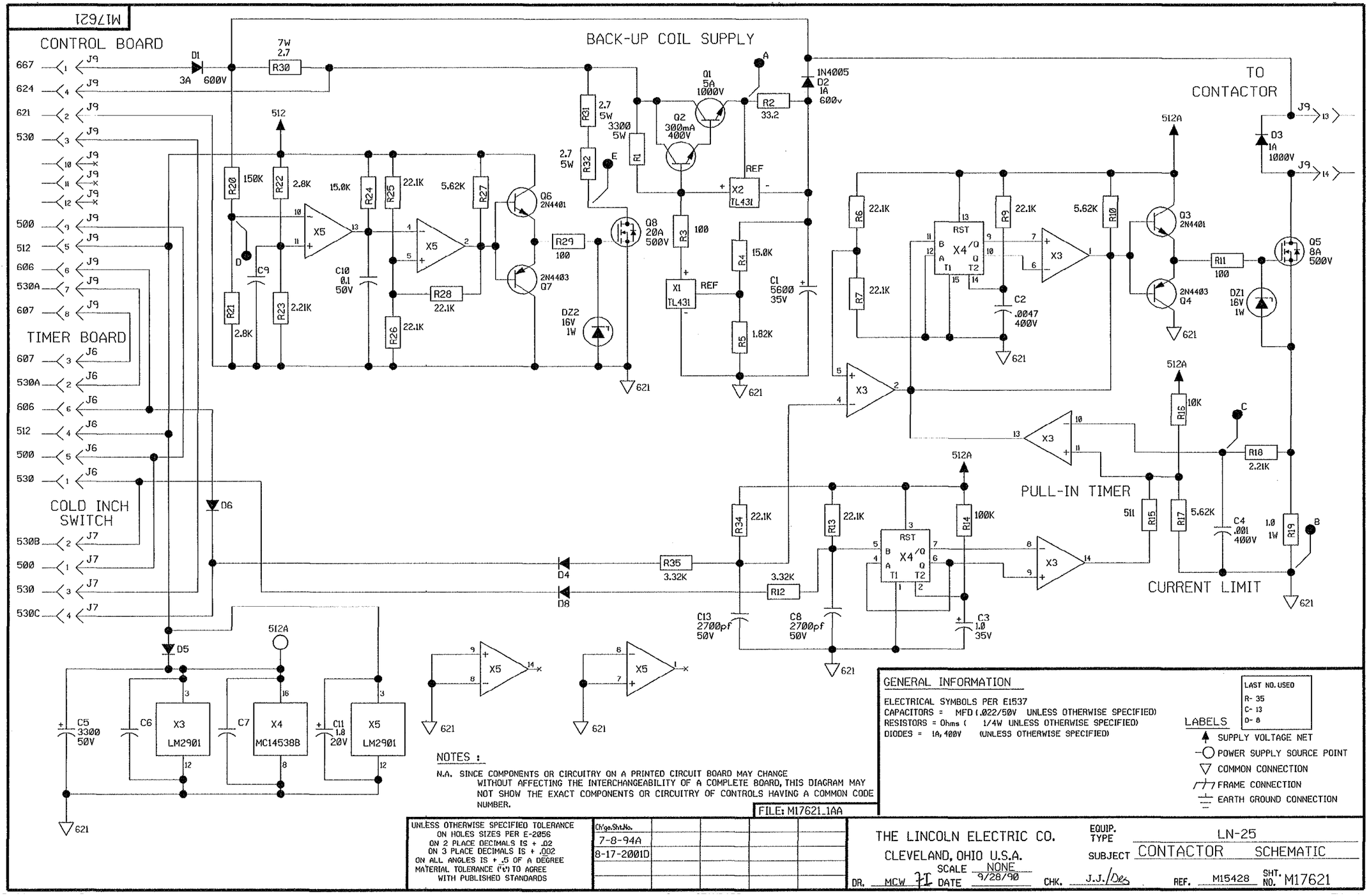

NOTE: This diagram is for reference only. It may not be accurate for all machines covered by this manual.

LINCOLN ELECTRIC

Return to Section TOC
Return to Master TOC

SCHEMATIC - CONTACTOR PC BD - BELOW CODE 9900 (L7535-[ ] CONTACTOR - M15428)

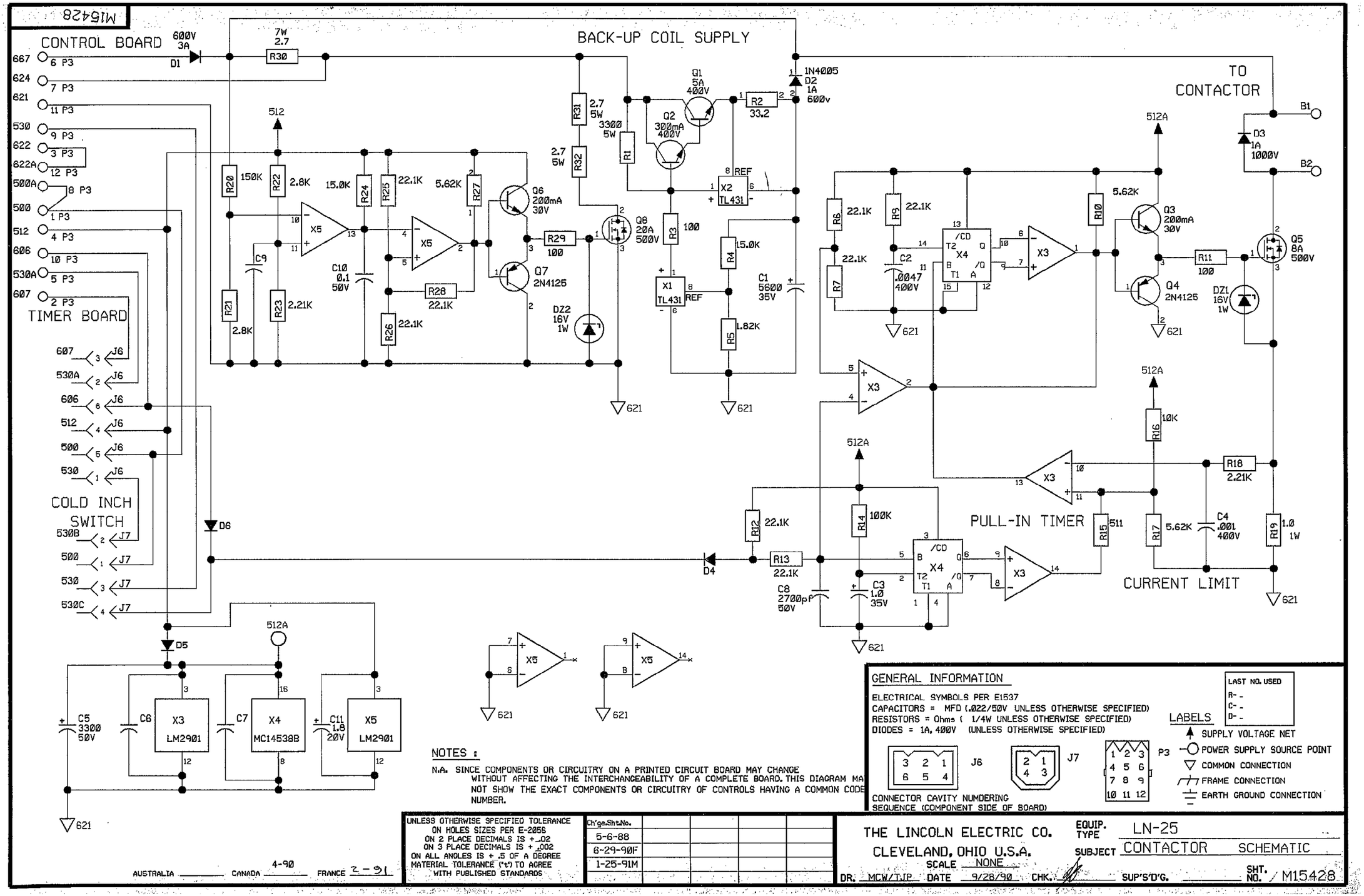

NOTE: This diagram is for reference only. It may not be accurate for all machines covered by this manual.

Return to Section TOC
Return to Master TOC

SCHEMATIC - CONTACTOR PC BD - BELOW CODE 9900 (L9185-[ ] CONTACTOR - M17139)

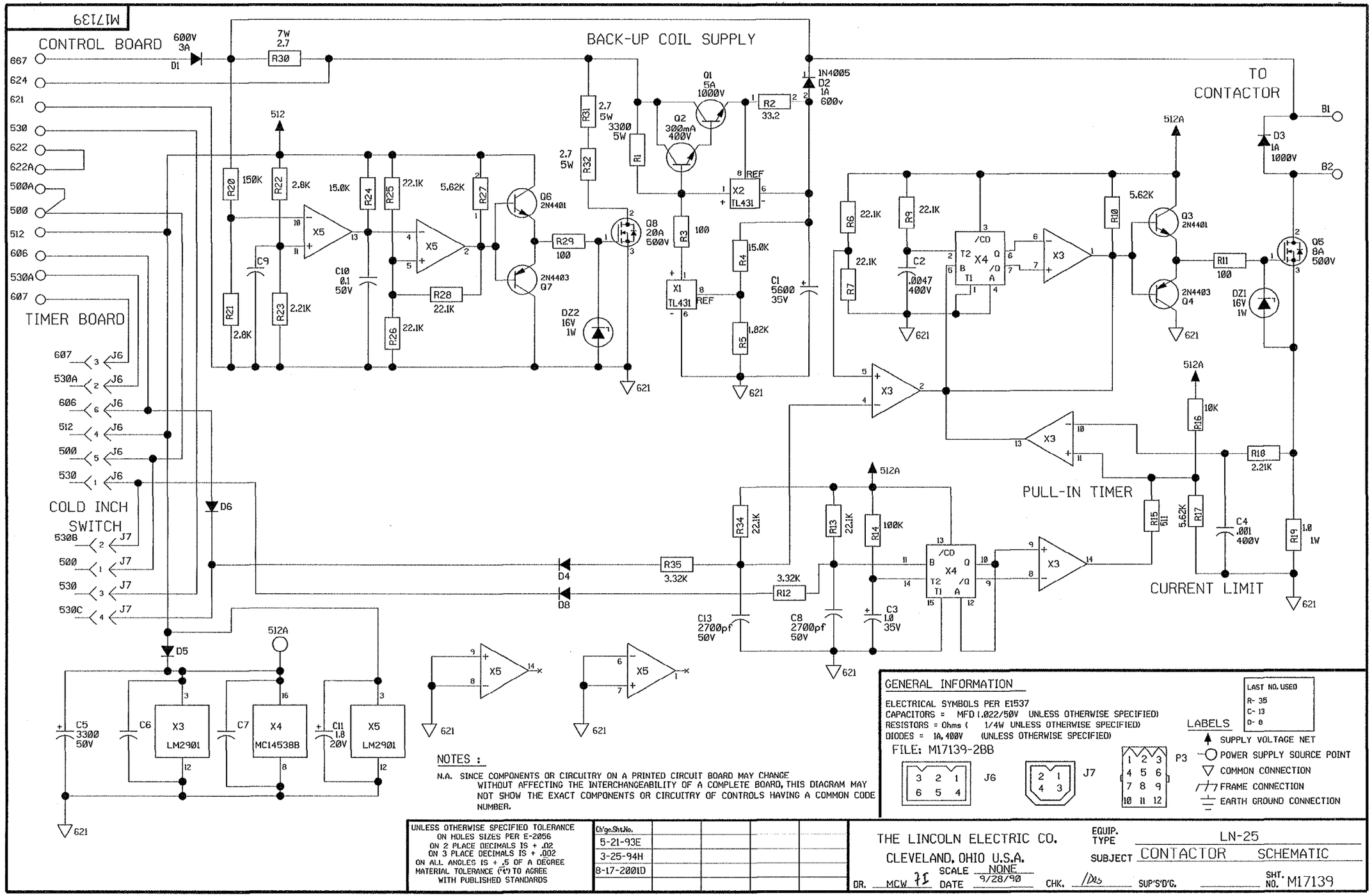

L N-25™

NOTE: This diagram is for reference only. It may not be accurate for all machines covered by this manual.

Return to Section TOC
Return to Master TOC

PC BOARD ASSEMBLY - CONTACTOR - ABOVE CODE 10500 (L10863-1)

L10863-1

ENGINEERING CONTROLLED
MANUFACTURER: No

CHANGE DETAIL: REVISED COMPONENTS AND PART NUMBERS AND UPDATED GRAPHICS

P.C. BOARD BLANK INFORMATION
MAKE FROM S19399 (MKES 10 BOARDS PER PANEL,
SEE ELECTRONIC FILE FOR ADDITIONAL INFORMATION)
BLANK PART NUMBER L10863-C

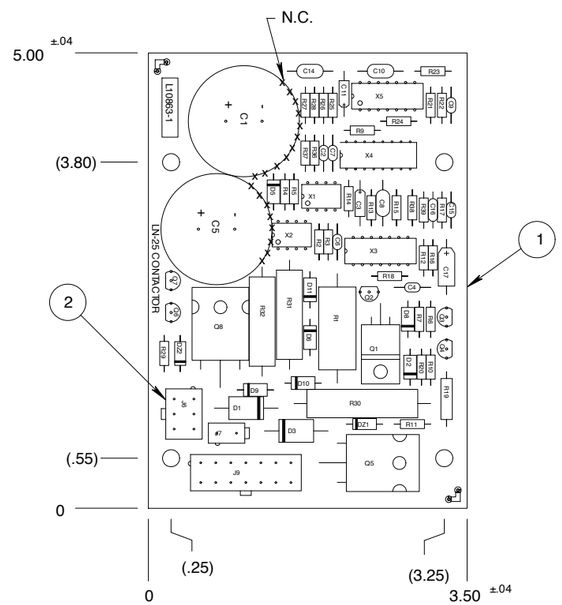

ITEM	REQ'D	PART NO.	IDENTIFICATION
C1	1	S13490-107	5600/35V
C2	1	S16668-6	4700pF/50
C3	1	S13490-42	1.0/35
C4	1	S16668-7	820pF/50
C5	1	S13490-92	3300/50
C6,C7,C9,C15	4	S16668-5	.022/50
C8,C14	2	S16668-4	2700pF/50
C10	1	S16668-11	.1/50
C11	1	S13490-19	1.8/20
C16	1	S16668-1	22pF/100
C17	1	S13490-39	18/15
D1	1	T12705-29	DIODE
D2	1	T12199-2	1N4007
D3	1	T12705-59	DIODE 600V/3A
D5,D6,D8,D9,D10,D11	6	T12199-1	1N4004
DZ1,DZ2	2	T12702-11	1N4745A
J6	1	S18248-6	HEADER
J7	1	S18248-2T	HEADER
J9	1	S18248-14	HEADER
Q1	1	T12704-56	5A.,1000V. TRANSISTOR
Q2	1	T12704-55	TRANSISTOR
Q3,Q6	2	T12704-68	2N4401
Q4,Q7	2	T12704-69	2N4403
Q5	1	T12704-87	TRANSISTOR,NMF (SS)
Q8	1	T12704-71	HEXFET TRANS. (SS)
R1	1	T14648-5	3.3K 5W
R2	1	S19400-33R2	33.2 1/4W
R3,R11,R29	3	S19400-1000	100 1/4W
R4,R24	2	S19400-1502	15K 1/4W
R5	1	S19400-1821	1.82K 1/4W
R6,R7,R9,R13,R25,R26,R28 R36	8	S19400-2212	22.1K 1/4W
R10,R27	2	S19400-5621	5.62K 1/4W
R12,R37	2	S19400-3321	3.32K 1/4W
R14	1	S19400-1003	100K 1/4W
R15	1	S19400-5110	511 1/4W
R16	1	S19400-1002	10K 1/4W
R17	1	S19400-3921	3.92K 1/4W
R18	1	S19400-2671	2.67K 1/4W
R19	1	T12300-79	1 WATT 1 OHM 1% RESIS.
R20	1	S19400-1503	150K 1/4W
R21,R22	2	S19400-2801	2.8K 1/4W
R23	1	S19400-2211	2.21K 1/4W
R30	1	T12300-85	7 WATTS, 2.7 OHMS
R31,R32	2	T13165-11	2.7 OHM, 5 WATT RESIS.
R38,R39	2	S19400-1001	1K 1/4W
X1,X2	2	S15128-10	IC,431,VOLTAGE REF.
X3,X5	2	S15128-11	14 PIN QUAD COMP.
X4	1	S15018-9	CMOS MC14538B (SS)

N.A. J6, J7, J9

N.B. Q5, Q8

N.B. X4

MANUFACTURED AS:

L10863-1C0

IDENTIFICATION CODE

ITEM	PART NO.	DESCRIPTION	REQ'D
1	SEE BLANK INFORMATION	CONTACTOR P.C. BOARD BLANK	1
2	T13498-22	JUMPER PLUG	1
3	E2861	ADHESIVE	.03 oz.

N.A.

INDUCTANCE = HENRYS
CAPACITORS = MFD/VOLTS

MAKE PER E1911
ENCAPSULATE WITH E1844
TEST PER E2747-K
SCHEMATIC REFERENCE: M19065-1C0

FOR PARTS ORDERS:

INCLUDE (1) T14477PRINT

NOTES:

N.A. DO NOT COAT WITH ENCAPSULATION MATERIAL.

N.B. CAUTION: THIS DEVICE IS SUBJECT TO DAMAGE BY STATIC ELECTRICITY. SEE E2454 BEFORE HANDLING.

N.C. ANCHOR CAPACITORS TO BOARD WITH .25 WIDE, .50 LONG BEAD OF **ITEM 3** (2 PLACES)

PROPRIETARY & CONFIDENTIAL. THIS DOCUMENT CONTAINS PROPRIETARY INFORMATION OWNED BY LINCOLN GLOBAL, INC. AND MAY NOT BE DUPLICATED, COMMUNICATED TO OTHER PARTIES OR USED FOR ANY PURPOSE WITHOUT THE EXPRESS WRITTEN PERMISSION OF LINCOLN GLOBAL, INC.

UNLESS OTHERWISE SPECIFIED TOLERANCE MANUFACTURING TOLERANCE PER E2056 ON 2 PLACE DECIMALS IS ± .02 ON 3 PLACE DECIMALS IS ± .002 ON ALL ANGLES IS ± .5 OF A DEGREE MATERIAL TOLERANCE ("1") TO AGREE WITH PUBLISHED STANDARDS.
DO NOT SCALE THIS DRAWING

DESIGN INFORMATION
DRAWN BY: PEH
ENGINEER:
APPROVED: -
REFERENCE: L9670-1
SCALE: 1:1

EQUIPMENT TYPE: LN-25
SUBJECT: CONTACTOR P.C. BOARD ASSEMBLY
MATERIAL DISPOSITION: NA
APPROVAL DATE: 11/8/202
PROJECT NUMBER: CRM32207

PAGE 1 OF 1
DOCUMENT NUMBER: L10863-1
DOCUMENT REVISION: A

SOLID EDGE

NOTE: Lincoln Electric assumes no responsibility for liablilities resulting from board level troubleshooting. PC Board repairs will invalidate your factory warranty. **Individual Printed Circuit Board Components are not available from Lincoln Electric.** This information is provided for reference only. Lincoln Electric discourages board level troubleshooting and repair since it may compromise the quality of the design and may result in danger to the Machine Operator or Technician. Improper PC board repairs could result in damage to the machine.

LINCOLN ELECTRIC

Return to Section TOC
Return to Master TOC

PC BOARD ASSEMBLY - CONTACTOR - CODE 10100 THRU 10500 (L9670-1)

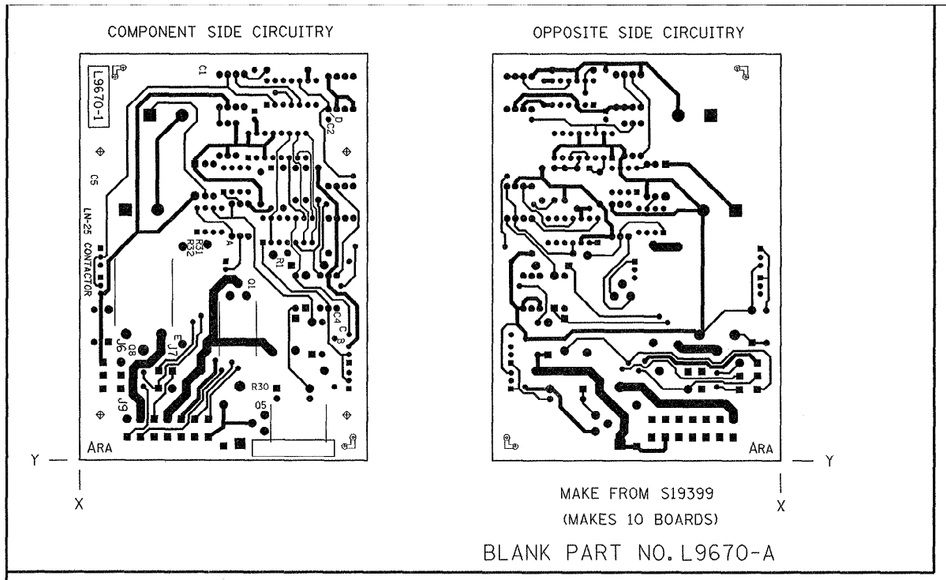

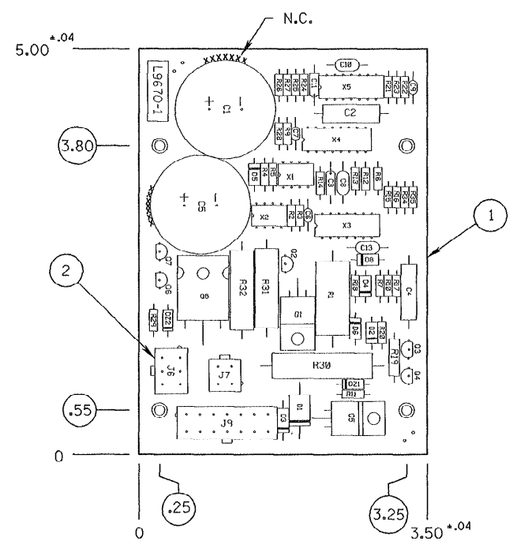

	ITEM	REQ'D	PART NO.	IDENTIFICATION
	C1	1	S13490-107	5600 35
	C2	1	S13490-3	.0047/400
	C3	1	S13490-42	1.0/35
	C4	1	S13490-76	.001/400
	C5	1	S13490-92	3300/50
	C6,C7,C9	3	S16668-5	.022/50
	C8,C13	2	S16668-4	2700PF/50
	C10	1	S16668-11	.1/50
	C11	1	S13490-19	1.8/20
	D1	1	T12705-29	DIODE
	D2	1	T12199-4	IN4005 DIODE
	D3	1	T12705-44	DIODE 1000V/1A
	D4,D5,D6,D8	4	T12199-1	IN4004
	DZ1,DZ2	2	T12702-11	IN4745A
N.A.	J6	1	S18248-6	6 PIN RECEPTACLE
N.A.	J7	1	S18248-4	HEADER
N.A.	J9	1	S18248-14	HEADER
	Q1	1	T12704-56	5A.,1000V.
	Q2	1	T12704-55	TRANSISTOR
	Q3,Q6	2	T12704-68	2N4401
	Q4,Q7	2	T12704-69	2N4403
N.B.	Q5	1	T12704-72	HEXFET TRANS.(SS)
N.B.	Q8	1	T12704-71	HEXFET TRANS.(SS)
	R1	1	T14648-5	3.3K 5W
	R2	1	S19400-33R2	33.2 OHM 1/4W.
	R3,R11,R29	3	S19400-1000	100 1/4W
	R4,R24	2	S19400-1502	15K 1/4W
	R5	1	S19400-1821	1.82K ,1/4W
	R6,R7,R9,R13,R25,R26,R28 R34	8	S19400-2212	22.1K 1/4W
	R10,R17,R27	3	S19400-5621	5.62K 1/4W
	R12,R35	2	S19400-3321	3.32K 1/4W
	R14	1	S19400-1003	100K 1/4W
	R15	1	S19400-5110	511 1/4W
	R16	1	S19400-1002	10K 1/4W
	R18,R23	2	S19400-2211	2.21K 1/4W
	R19	1	T12300-79	1 W 1 OHM 1%
	R20	1	S19400-1503	150K 1/4W
	R21,R22	2	S19400-2801	2.8K 1/4W
	R30	1	T12300-85	7 W. 2.7 OHMS
	R31,R32	2	T13165-11	2.7 OHM, 5 W
	X1,X2	2	S15128-10	VOLTAGE REF.
	X3,X5	2	S15128-11	14 PIN QUAD
N.B.	X4	1	S15018-9	CMOS MC14538B (SS)

	ITEM	PART NO.	DESCRIPTION	REQ'D
	1	L9670-A	CONTACTOR P.C. BOARD BLANK	1
N.A.	2	T13498-22	JUMPER PLUG	1
	3	E2861	ADHESIVE	.03 OZ.

MANUFACTURED AS:

L9670-1A0

IDENTIFICATION CODE

MAKE PER E1911
ENCAPSULATE WITH E1844
TEST PER E2747-K

INDUCTANCE = HENRYS
CAPACITORS = MFD/VOLTS

NOTES:

N.A. DO NOT COAT WITH ENCAPSULATION MATERIAL.

N.B. CAUTION:THIS DEVICE IS SUBJECT TO DAMAGE BY STATIC ELECTRICITY. SEE E2454 BEFORE HANDLING.

N.C. ANCHOR CAPACITORS TO BOARD WITH .25 WIDE,.50 LONG BEAD OF ITEM (3) (2 PLACES)

L9670-1

FOR PARTS ORDERS:
SEND L10863-[] AND S18250-589
INCLUDE (1) T14477PRINT AND
(1) S21416PRINT

THE LINCOLN ELECTRIC CO. CLEVELAND, OHIO U.S.A.
EQUIP. TYPE LN-25
SUBJECT CONTACTOR P.C. BOARD ASSEMBLY
SUPSDG'D LS185-2 SHT. NO. L 9670-1
DR. S.T. SCALE 3/1 FULL DATE 4-28-94 CHK. /DSG. REF.
Dr. Chg. Ord. No. 7-6-94A 8-12-94C 2-22-96 8-12-2003

UNLESS OTHERWISE SPECIFIED TOLERANCE ON FRACTIONS IS ±1/64 ON 2 PLACE DECIMALS IS ±.01 ON 3 PLACE DECIMALS IS ±.002 ON ALL ANGLES IS ±.5 OF A DEGREE MATERIAL TOLERANCE A.T.D. TO BE WITH PUBLISHED STANDARDS.

THIS SHEET CONTAINS PROPRIETARY INFORMATION OWNED BY THE LINCOLN ELECTRIC CO. AND IS NOT TO BE REPRODUCED, DISCLOSED OR USED WITHOUT THE EXPRESS PERMISSION OF THE LINCOLN ELECTRIC CO.

NOTE: Lincoln Electric assumes no responsibility for liablilities resulting from board level troubleshooting. PC Board repairs will invalidate your factory warranty. **Individual Printed Circuit Board Components are not available from Lincoln Electric.** This information is provided for reference only. Lincoln Electric discourages board level troubleshooting and repair since it may compromise the quality of the design and may result in danger to the Machine Operator or Technician. Improper PC board repairs could result in damage to the machine.

LINCOLN ELECTRIC

Return to Section TOC
Return to Master TOC

PC BOARD ASSEMBLY - CONTACTOR - BELOW CODE 9900 (L9185-2)

COMPONENT SIDE CIRCUITRY

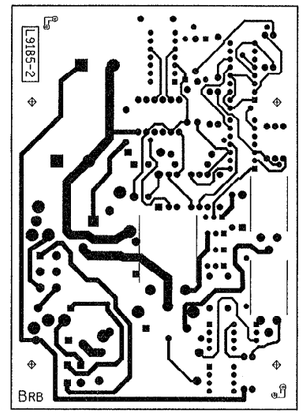

OPPOSITE SIDE CIRCUITRY

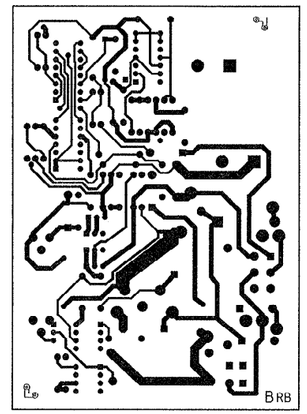

SILKSCREEN

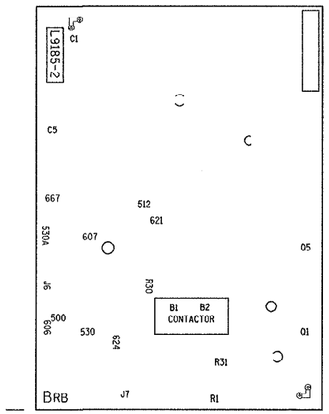

Y — X — Y — X — Y — X

NOTE: FOR BLANK SHEARING TOLERANCE SEE P.C. BOARD ASSEMBLY DRAWING.

MAKE FROM S19399
(MAKES 10 BOARDS)

BLANK PART NO. L9185-B

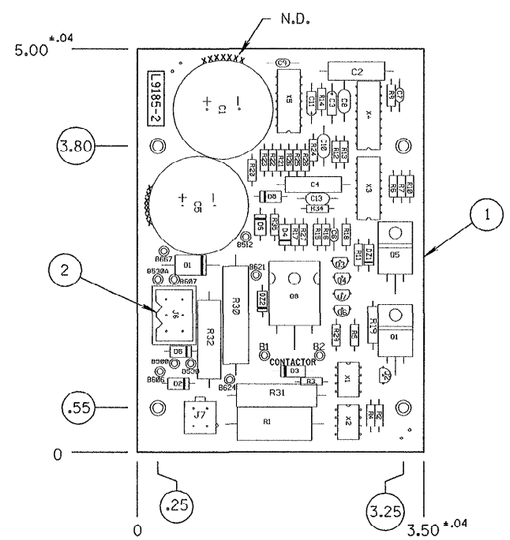

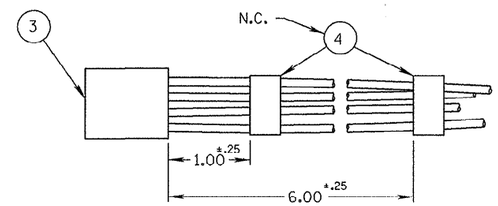

MANUFACTURED AS:

L9185-2B0

IDENTIFICATION CODE

MAKE PER E1911
ENCAPSULATE WITH E1844
TEST PER E2747-K

	ITEM	REQ'D	PART NO.	IDENTIFICATION
N.A.	B1,B2	2	T13157-2	TERMINAL
	C1	1	S13490-107	5600 35
	C2	1	S13490-3	.0047/400
	C3	1	S13490-42	1.0/35
	C4	1	S13490-76	.001/400
	C5	1	S13490-92	3300/50
	C6,C7,C9	3	S16660-5	.022/50
	C8,C13	2	S16668-4	2700PF/50
	C10	1	S16668-11	.1/50
	C11	1	S13490-19	1.8/20
	D1	1	T12705-29	DIODE
	D2	1	T12199-4	IN4005 DIODE
	D3	1	T12705-44	DIODE 1000V/1A
	D4,D5,D6,D8	4	T12199-1	1N4004
	DZ1,DZ2	2	T12702-11	1N4745A
N.A.	J6	1	T13160-5	6 PIN RECEPTACLE
N.A.	J7	1	S18248-4	HEADER
	Q1	1	T12704-56	5A.,1000V.
	Q2	1	T12704-55	TRANSISTOR
	Q3,Q6	2	T12704-68	2N4401
	Q4,Q7	2	T12704-69	2N4403
N.B.	Q5	1	T12704-72	HEXFET TRANS.(SS)
N.B.	Q8	1	T12704-71	HEXFET TRANS.(SS)
	R1	1	T14648-5	3.3K 5W
	R2	1	S19400-33R2	33.2 OHM 1/4W.
	R3,R11,R29	3	S19400-1000	100 1/4W
	R4,R24	2	S19400-1502	15K 1/4W
	R5	1	S19400-1821	1.82K .1/4W
	R6,R7,R9,R13,R25,R26,R28 R34	8	S19400-2212	22.1K 1/4W
	R10,R17,R27	3	S19400-5621	5.62K 1/4W
	R12,R35	2	S19400-3321	3.32K 1/4W
	R14	1	S19400-1003	100K 1/4W
	R15	1	S19400-5110	511 1/4W
	R16	1	S19400-1002	10K 1/4W
	R18,R23	2	S19400-2211	2.21K 1/4W
	R19	1	T12300-79	1 W 1 OHM 1%
	R20	1	S19400-1503	150K 1/4W
	R21,R22	2	S19400-2801	2.8K 1/4W
	R30	1	T12300-85	7 W. 2.7 OHMS
	R31,R32	2	T13165-11	2.7 OHM. 5 W
	X1,X2	2	S15128-10	VOLTAGE REF.
	X3,X5	2	S15128-11	14 PIN QUAD
N.B.	X4	1	S15018-9	CMOS MC14538B (SS)

	ITEM	PART NO.	DESCRIPTION	REQ'D
	1	L9185-B	CONTACTOR P.C. BOARD BLANK	1
N.A.	2	T13498-19	JUMPER PLUG	1
N.A.	3	S14165-424	RECEPTACLE & LEAD AS'BLY	1
	4	E1058-.375 WIDE	TAPE	.5 FT.
	5	E2861	ADHESIVE	.8 G

INDUCTANCE = HENRYS
CAPACITORS = MFD/VOLTS

NOTES:

N.A. DO NOT COAT WITH ENCAPSULATION MATERIAL.

N.B. CAUTION: THIS DEVICE IS SUBJECT TO DAMAGE BY STATIC ELECTRICITY. SEE E2454 BEFORE HANDLING.

N.C. WRAP LEADS WITH TWO TURNS OF ITEM (4)

N.D. ANCHOR CAPACITORS TO BOARD WITH .25 WIDE, .50 LONG BEAD OF ITEM (5) (2 PLACES)

L 9185-2

THE LINCOLN ELECTRIC CO. CLEVELAND, OHIO U.S.A.
LN-25
SUBJECT CONTACTOR P.C. BOARD ASSEMBLY
SCALE FULL DATE 3-10-95 CHK. REF. SUPSDE L9185-1 SHT. NO. L 9185-2

Orga.Ctrl. No. 2-26-96 1-5-89 1-13-90 7-20-90 8-17-2000

UNLESS OTHERWISE SPECIFIED TOLERANCE ON FULL SIZES PER E2028 ON 2 PLACE DECIMALS ± .02 ON 3 PLACE DECIMALS ± .010 ON ALL ANGLES ± 2° ALL MACHINE MATERIAL TOLERANCE F.T.D. AGREE WITH PUBLISHED STANDARDS.

THIS SHEET CONTAINS PROPRIETARY INFORMATION OWNED BY THE LINCOLN ELECTRIC CO. AND IS NOT TO BE REPRODUCED, DISCLOSED OR USED WITHOUT THE EXPRESS PERMISSION OF THE LINCOLN ELECTRIC CO.

FOR PARTS ORDERS:
SEND L10863-[], S18250-323, S18250-370, S18250-589, T13498-22, S21416PRINT & T14477PRINT

NOTE: Lincoln Electric assumes no responsibility for liablilities resulting from board level troubleshooting. PC Board repairs will invalidate your factory warranty. **Individual Printed Circuit Board Components are not available from Lincoln Electric.** This information is provided for reference only. Lincoln Electric discourages board level troubleshooting and repair since it may compromise the quality of the design and may result in danger to the Machine Operator or Technician. Improper PC board repairs could result in damage to the machine.

Return to Section TOC
Return to Master TOC
Return to Section TOC
Return to Master TOC
Return to Section TOC
Return to Master TOC