SA 250 & SA 350 WIRING DIAGRAM L9150 REV : L

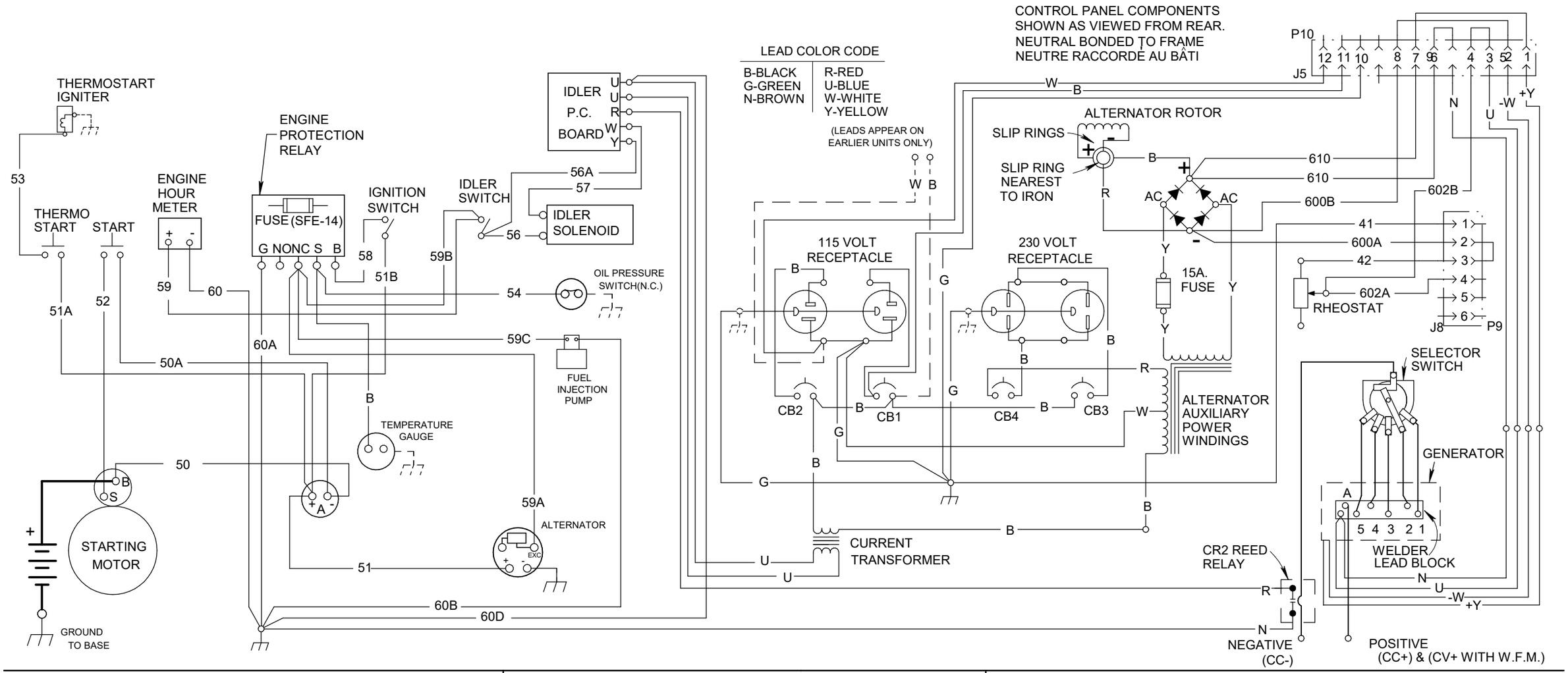

K924-1 REMOTE CONTROL (OPTIONAL)

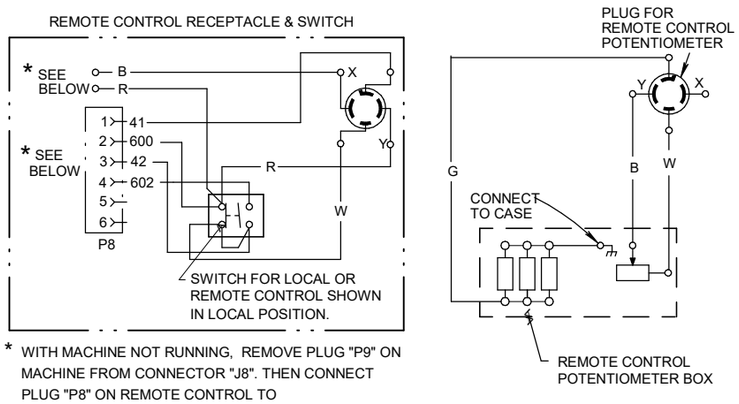

* WITH MACHINE NOT RUNNING, REMOVE PLUG "P9" ON MACHINE FROM CONNECTOR "J8". THEN CONNECT PLUG "P8" ON REMOTE CONTROL TO CONNECTOR "J8" ON MACHINE.

THE RED AND BLACK LEADS ARE USED ON CLASSIC I MACHINES ONLY AND ARE NOT CONNECTED ON THIS MACHINE. DAMAGE TO THE REMOTE CONTROL AND/OR MACHINE WILL RESULT IF THE RED AND BLACK LEADS ARE CONNECTED IN THE SA-250 AND 350-SA.

WIRE FEED MODULE (OPTIONAL)

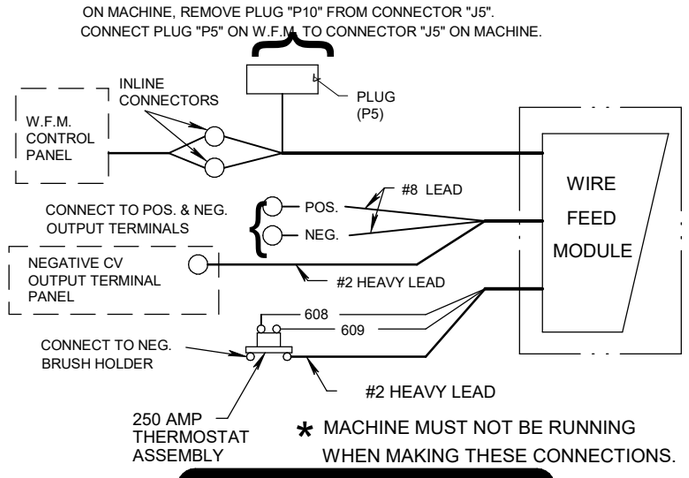

* MACHINE MUST NOT BE RUNNING WHEN MAKING THESE CONNECTIONS.

K924-4 REMOTE CONTROL (OPTIONAL)

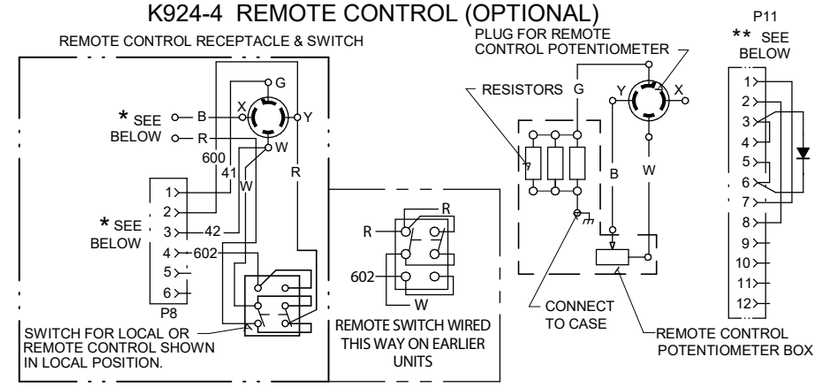

* WITH MACHINE OFF, REMOVE PLUG "P9" ON MACHINE FROM CONNECTOR "J8". THEN CONNECT PLUG "P8" ON REMOTE CONTROL KIT TO CONNECTOR "J8" ON MACHINE.

** IF A WIRE FEED MODULE IS INSTALLED, WITH THE MACHINE OFF, DISPOSE OF THE UNCONNECTED PLUG "P10" (IF ONE IS ON THE MACHINE). FASTEN THE NEW PLUG "P11" NEARBY, LEAVING IT UNCONNECTED.
IF NO WIRE FEED MODULE IS INSTALLED, WITH THE MACHINE OFF, DISCONNECT PLUG "P10" ON THE MACHINE FROM CONNECTOR "J5". CONNECT PLUG "P11" FROM THE REMOTE CONTROL KIT TO CONNECTOR "J5" ON THE MACHINE.

CAUTION: DAMAGE CAN OCCUR TO THE REMOTE CONTROL SWITCH IF IT IS USED WITHOUT THE "P11" PLUG INSTALLED OR A WIRE FEED MODULE INSTALLED.

THE RED AND BLACK LEADS ARE USED ON CLASSIC I MACHINES ONLY AND ARE NOT CONNECTED ON THIS MACHINE. DAMAGE TO THE REMOTE CONTROL AND/OR MACHINE WILL RESULT IF THE RED AND BLACK LEADS ARE CONNECTED IN THE SA-250 AND 350-SA.

2/22

LINCOLN ELECTRIC

CLEVELAND, OHIO U.S.A.