AUTODRIVE 19 WIRING DIAGRAM G5190-1 REV: A

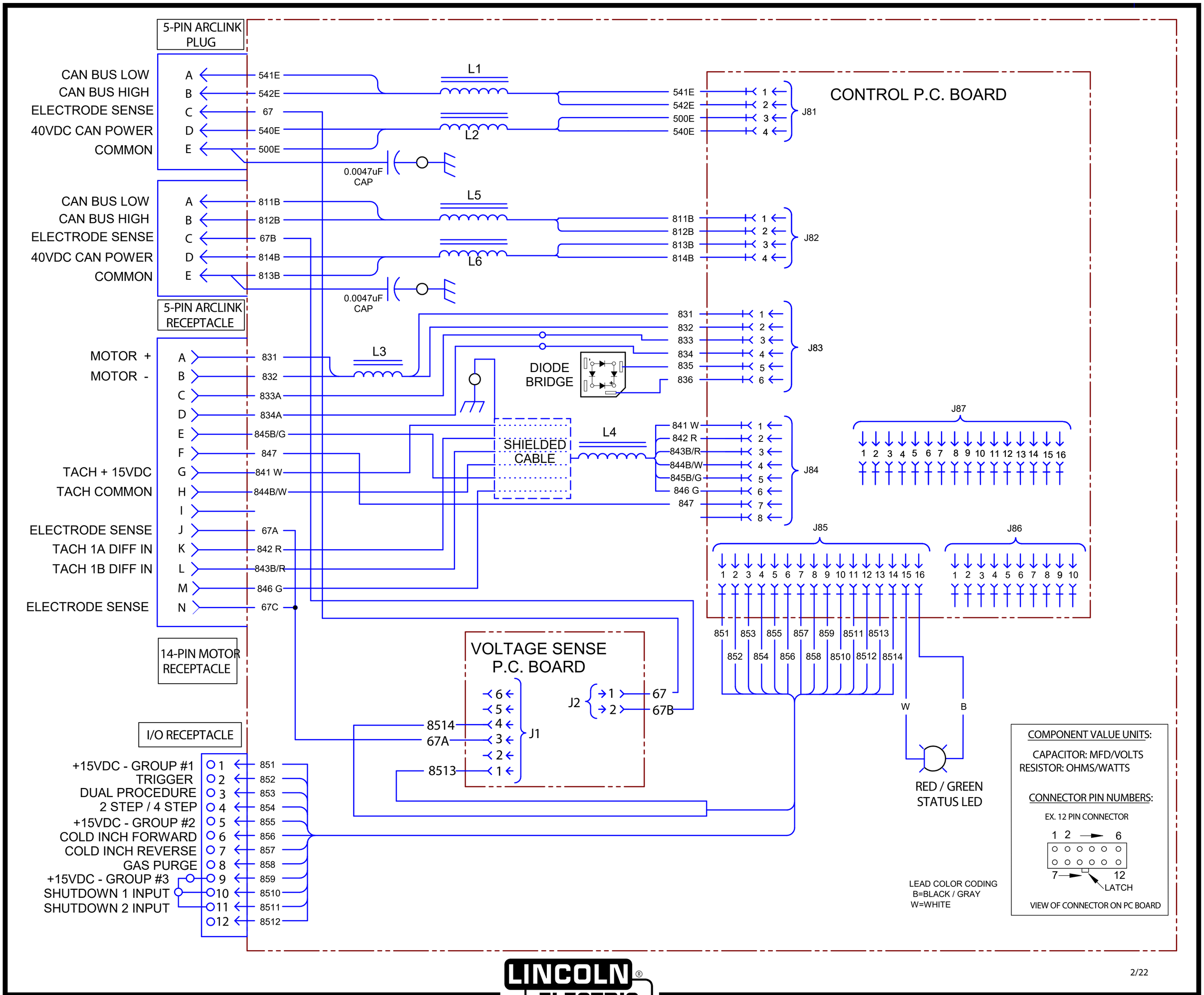

LINCOLN ELECTRIC

CLEVELAND, OHIO, U.S.A.

2/22