POWER WAVE 455/R WIRING DIAGRAM G3792 REV: B

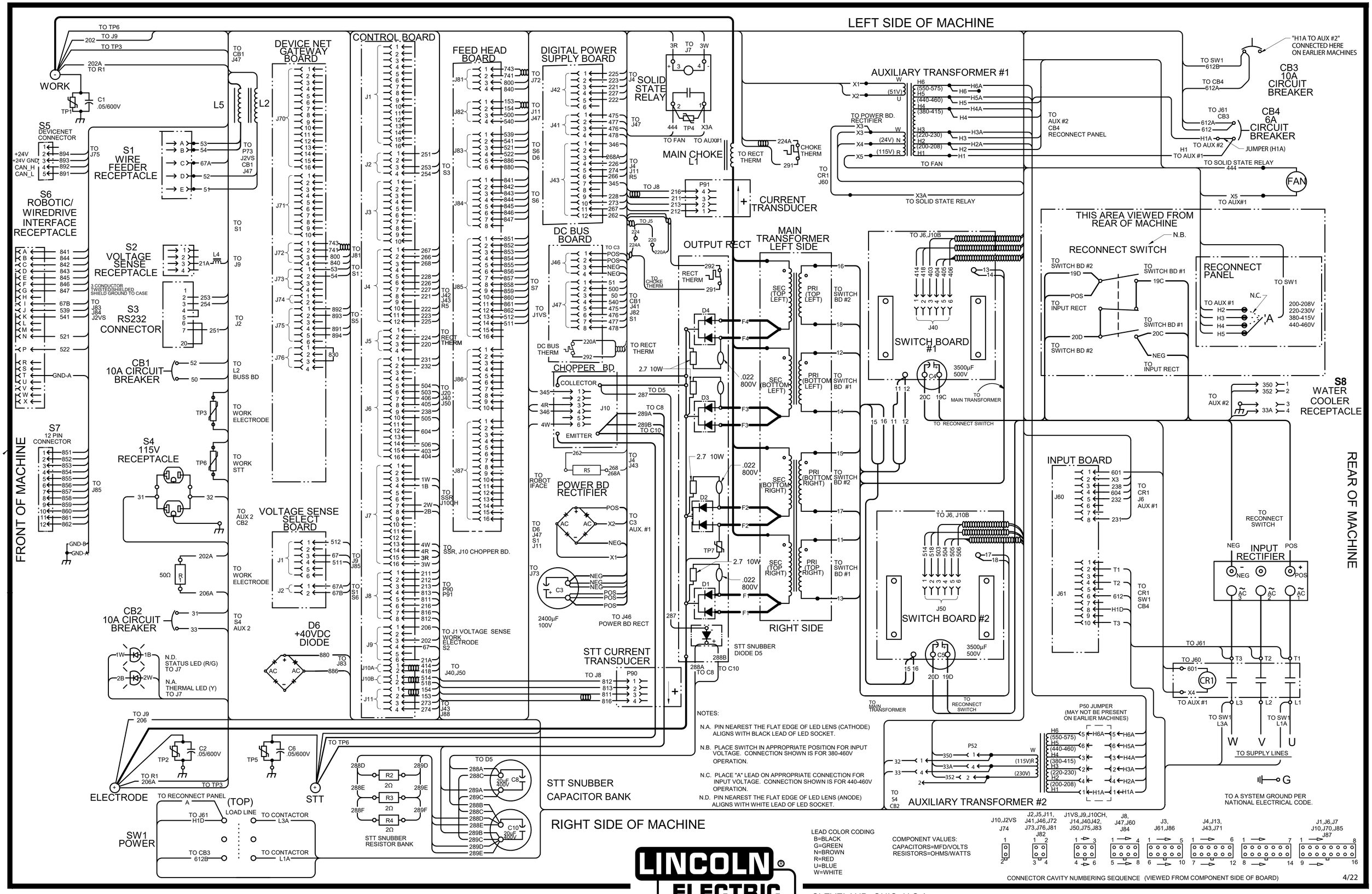

LINCOLN ELECTRIC

CLEVELAND, OHIO, U.S.A.