OUTBACK 145 MACHINE SCHEMATIC S28624 REV: A

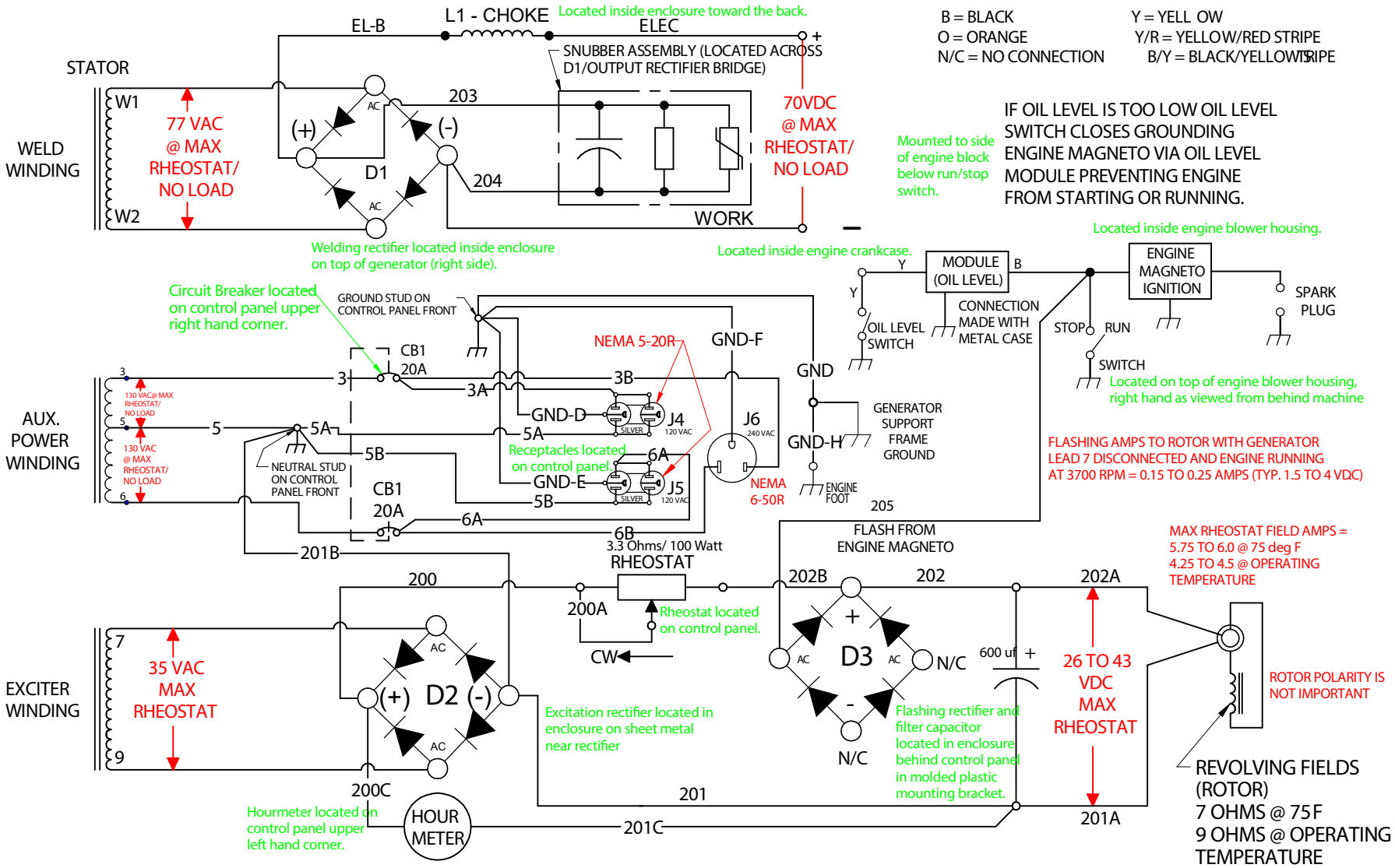

6/22