VANTAGE 400 MACHINE SCHEMATIC G8345-1 REV: A

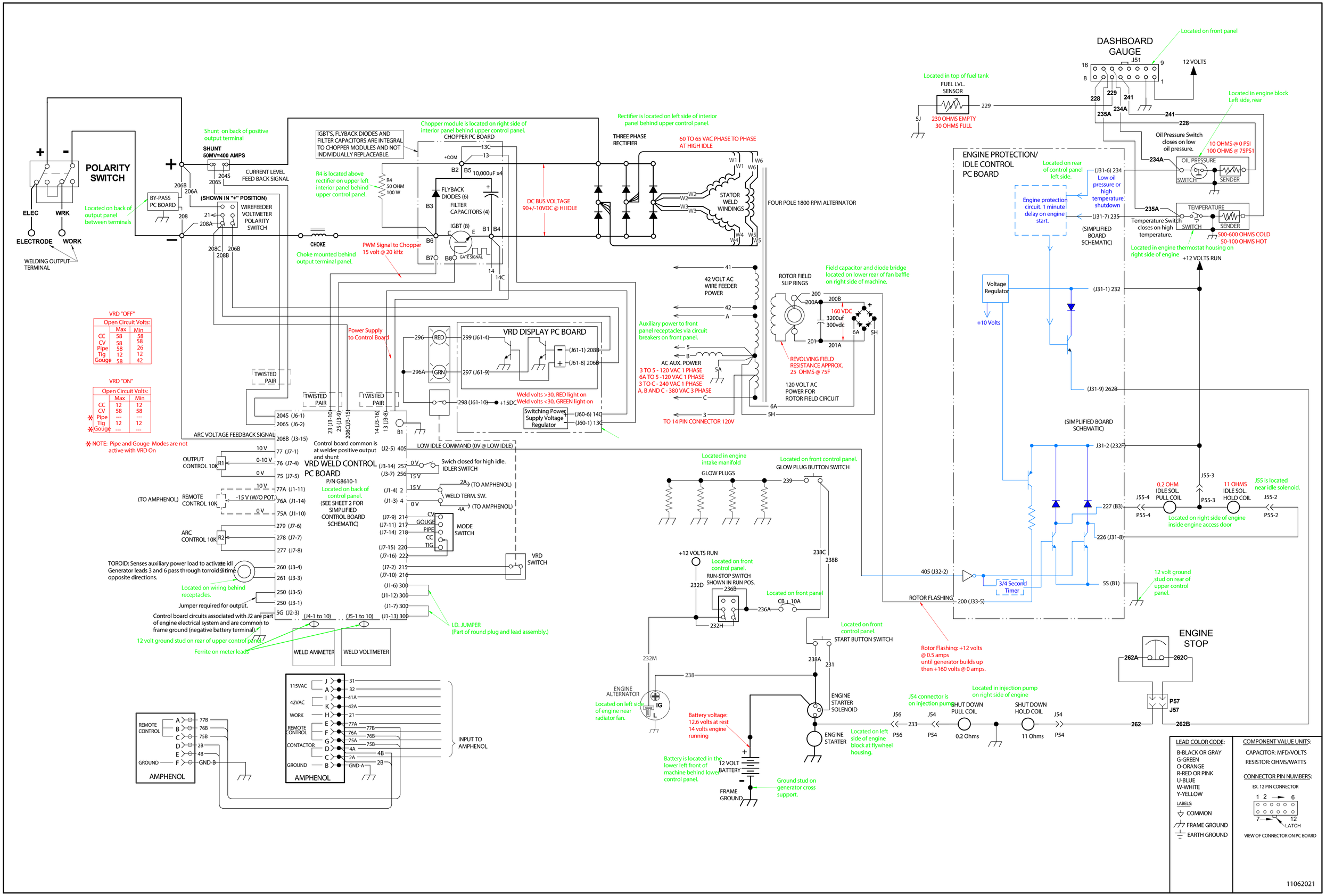

VANTAGE 400 MACHINE SCHEMATIC G8345-1 REV: A PAGE 2

SIMPLIFIED CONTROL BOARD SCHEMATIC

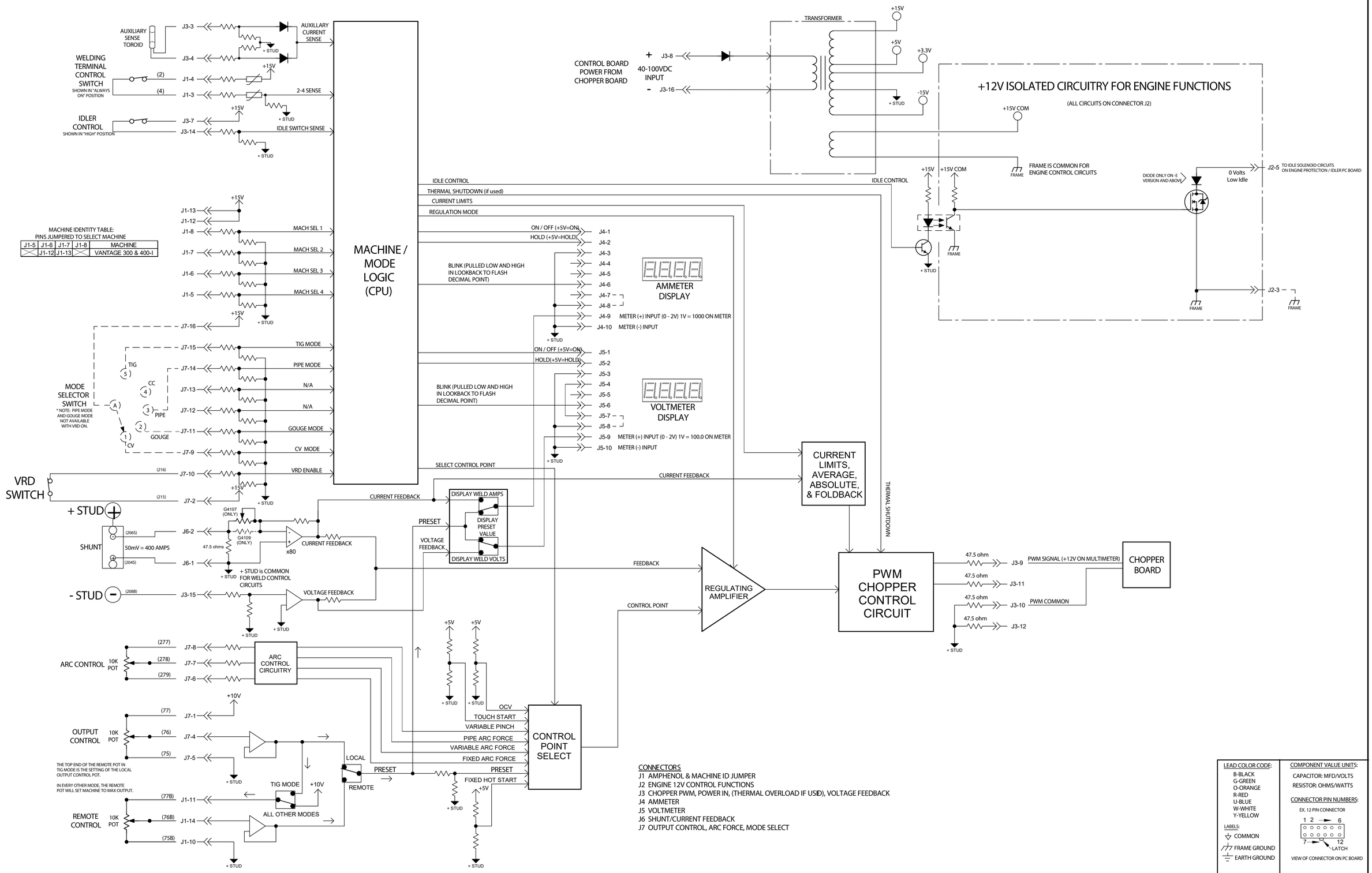

CONNECTORS
J1 AMPHENOL & MACHINE ID JUMPER
J2 ENGINE 12V CONTROL FUNCTIONS
J3 CHOPPER PWM, POWER IN, (THERMAL OVERLOAD IF USED), VOLTAGE FEEDBACK
J4 AMMETER
J5 VOLTMETER
J6 SHUNT/CURRENT FEEDBACK
J7 OUTPUT CONTROL, ARC FORCE, MODE SELECT

LEAD COLOR CODE:
B-BLACK
G-GREEN
O-ORANGE
R-RED
U-BLUE
W-WHITE
Y-YELLOW

LABELS:
COMMON
FRAME GROUND
EARTH GROUND

COMPONENT VALUE UNITS:
CAPACITOR: MFD/VOLTS
RESISTOR: OHMS/WATTS

CONNECTOR PIN NUMBERS:
EX. 12 PIN CONNECTOR
1 2 6
7 12
LATCH
VIEW OF CONNECTOR ON PC BOARD

11062021