CV-400, CV 500-I MACHINE SCHEMATIC L15891 REV: A

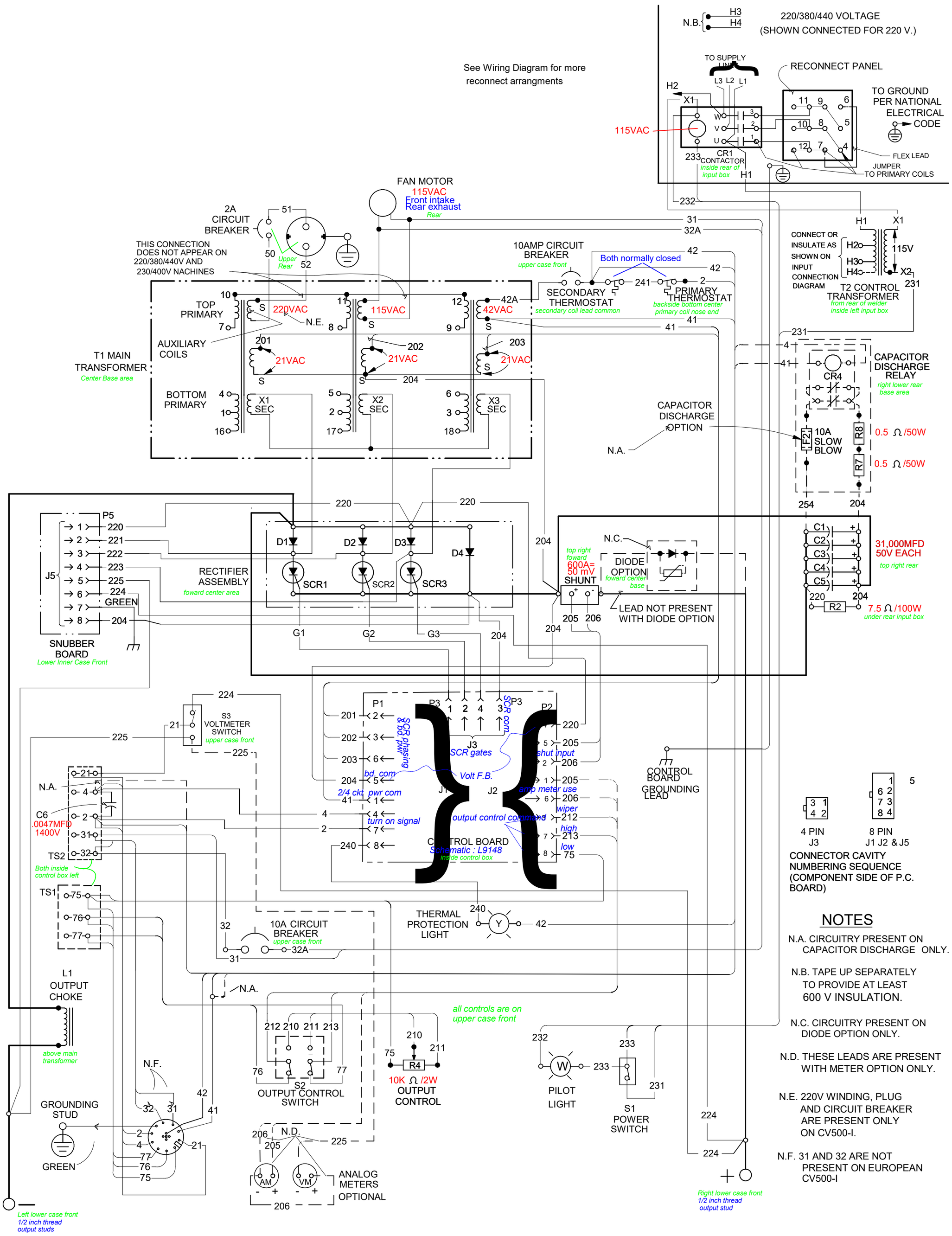

NOTES

N.A. CIRCUITRY PRESENT ON CAPACITOR DISCHARGE ONLY.

N.B. TAPE UP SEPARATELY TO PROVIDE AT LEAST 600 V INSULATION.

N.C. CIRCUITRY PRESENT ON DIODE OPTION ONLY.

N.D. THESE LEADS ARE PRESENT WITH METER OPTION ONLY.

N.E. 220V WINDING, PLUG AND CIRCUIT BREAKER ARE PRESENT ONLY ON CV500-I.

N.F. 31 AND 32 ARE NOT PRESENT ON EUROPEAN CV500-I