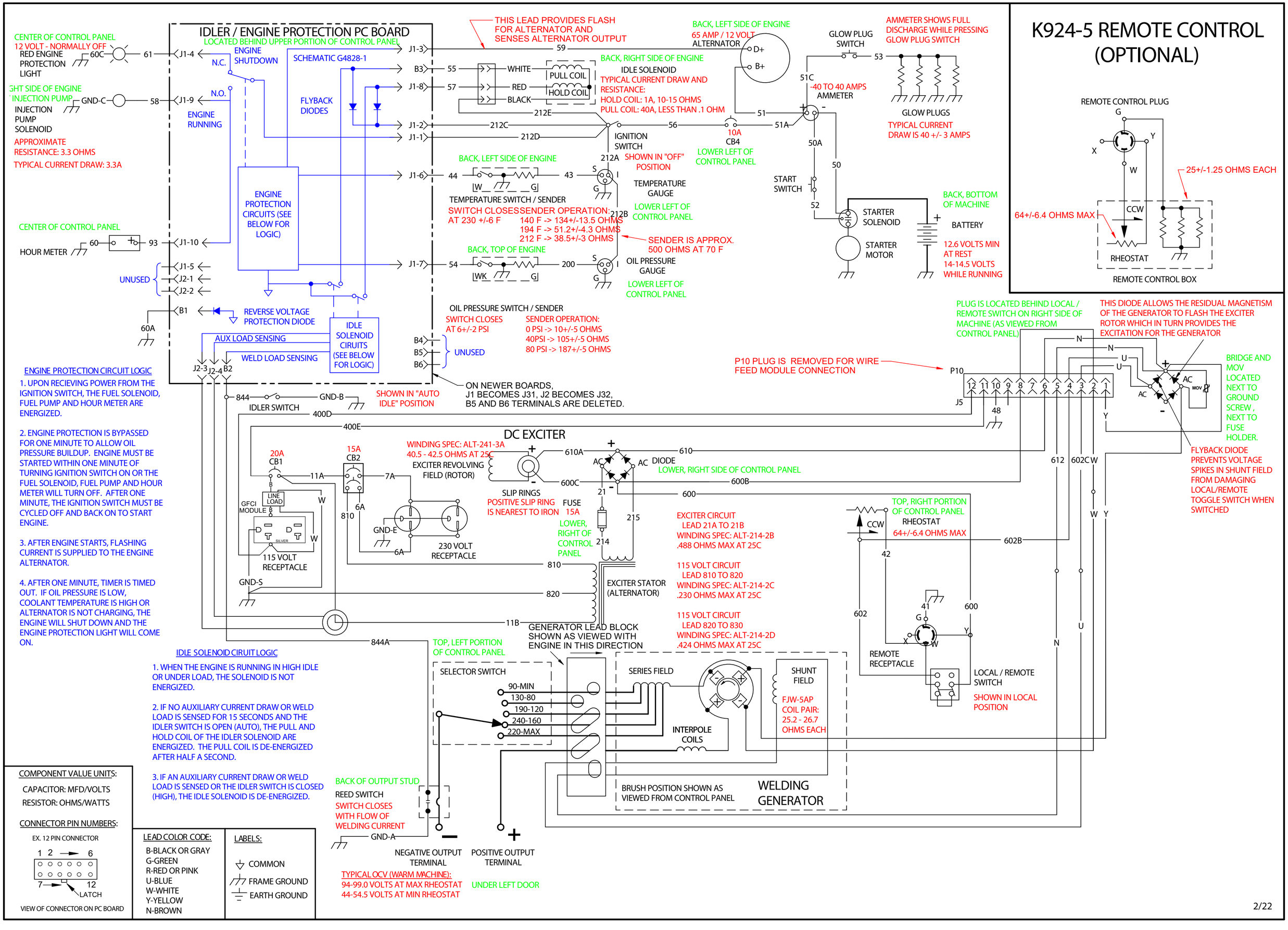CLASSIC 300D (PERKINS) MACHINE SCHEMATIC L15829 REV: A