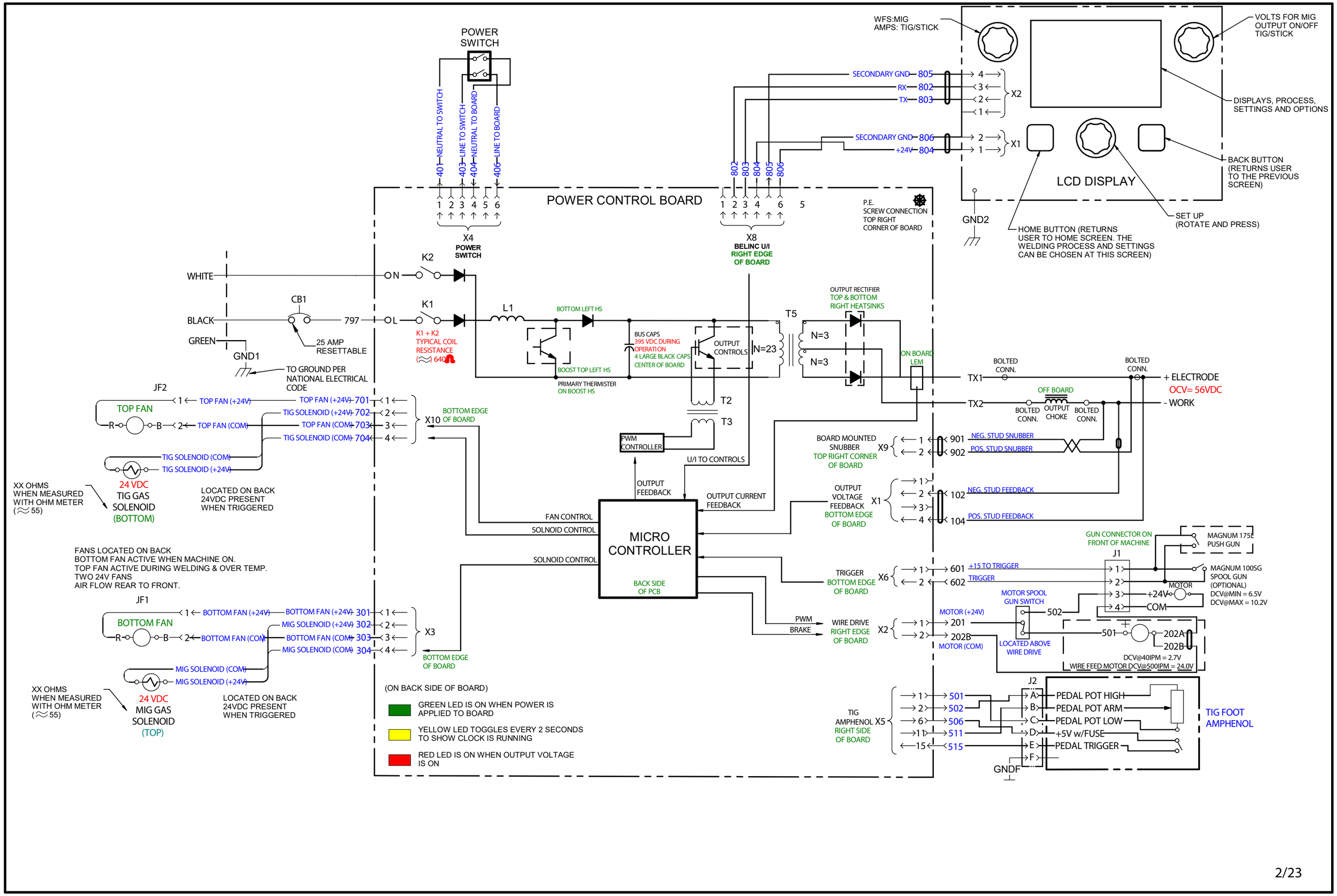POWER MIG 215MP MACHINE SCHEMATIC G10336 REV: A