IM10123

September, 2012

POWER WAVE® S500CE

For use with machines having Code Numbers: **11883**

Safety Depends on You

Lincoln arc welding and cutting equipment is designed and built with safety in mind. However, your overall safety can be increased by proper installation ... and thoughtful operation on your part. **DO NOT INSTALL, OPERATE OR REPAIR THIS EQUIPMENT WITHOUT READING THIS MANUAL AND THE SAFETY PRECAUTIONS CONTAINED THROUGHOUT.** And, most importantly, think before you act and be careful.

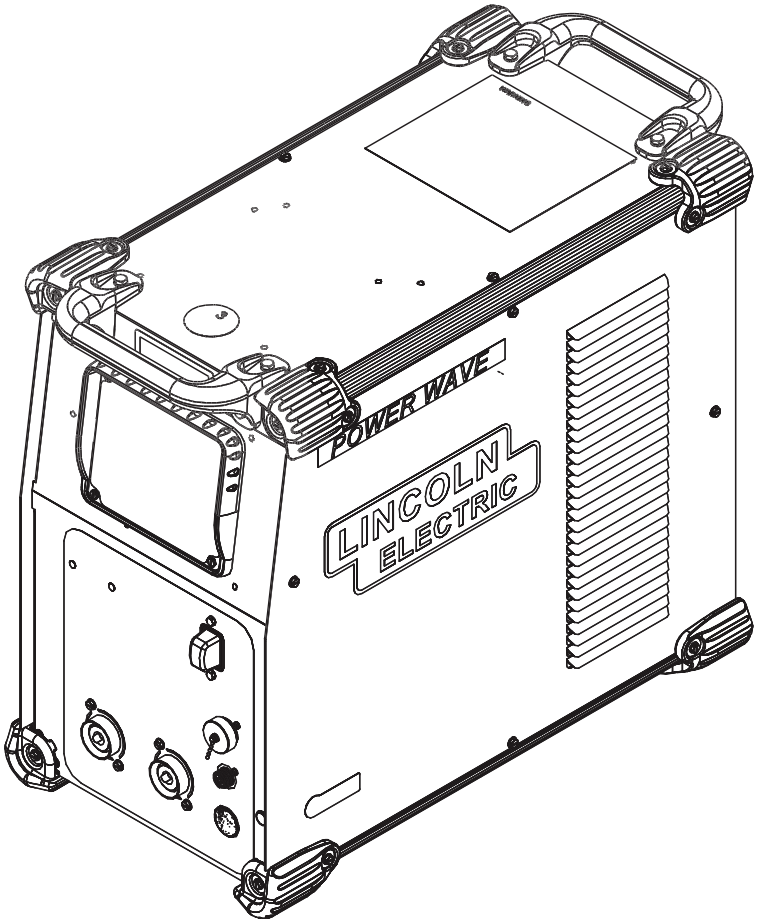

OPERATOR'S MANUAL

Copyright © Lincoln Global Inc.

LINCOLN® ELECTRIC

• World's Leader in Welding and Cutting Products • • Sales and Service through Subsidiaries and Distributors Worldwide •
Cleveland, Ohio 44117-1199 U.S.A. TEL: 1.216.481.8100 For Service in U.S. and Canada: Call 1.888.935.3877
FAX: 1.216.486.1751 WEB SITE: lincolnelectric.com For Non-U.S. Service: Email globalservice@lincolnelectric.com

THANK YOU FOR SELECTING A QUALITY PRODUCT BY LINCOLN ELECTRIC.

PLEASE EXAMINE CARTON AND EQUIPMENT FOR DAMAGE IMMEDIATELY

When this equipment is shipped, title passes to the purchaser upon receipt by the carrier. Consequently, claims for material damaged in shipment must be made by the purchaser against the transportation company at the time the shipment is received.

SAFETY DEPENDS ON YOU

Lincoln arc welding and cutting equipment is designed and built with safety in mind. However, your overall safety can be increased by proper installation ... and thoughtful operation on your part. **DO NOT INSTALL, OPERATE OR REPAIR THIS EQUIPMENT WITHOUT READING THIS MANUAL AND THE SAFETY PRECAUTIONS CONTAINED THROUGHOUT.** And, most importantly, think before you act and be careful.

⚠ WARNING

This statement appears where the information must be followed exactly to avoid serious personal injury or loss of life.

⚠ CAUTION

This statement appears where the information must be followed to avoid minor personal injury or damage to this equipment.

KEEP YOUR HEAD OUT OF THE FUMES.

DON'T get too close to the arc. Use corrective lenses if necessary to stay a reasonable distance away from the arc.

READ and obey the Safety Data Sheet (SDS) and the warning label that appears on all containers of welding materials.

USE ENOUGH VENTILATION or exhaust at the arc, or both, to keep the fumes and gases from your breathing zone and the general area.

IN A LARGE ROOM OR OUTDOORS, natural ventilation may be adequate if you keep your head out of the fumes (See below).

USE NATURAL DRAFTS or fans to keep the fumes away from your face.

If you develop unusual symptoms, see your supervisor. Perhaps the welding atmosphere and ventilation system should be checked.

WEAR CORRECT EYE, EAR & BODY PROTECTION

PROTECT your eyes and face with welding helmet properly fitted and with proper grade of filter plate (See ANSI Z49.1).

PROTECT your body from welding spatter and arc flash with protective clothing including woolen clothing, flame-proof apron and gloves, leather leggings, and high boots.

PROTECT others from splatter, flash, and glare with protective screens or barriers.

IN SOME AREAS, protection from noise may be appropriate.

BE SURE protective equipment is in good condition.

Also, wear safety glasses in work area **AT ALL TIMES.**

SPECIAL SITUATIONS

DO NOT WELD OR CUT containers or materials which previously had been in contact with hazardous substances unless they are properly cleaned. This is extremely dangerous.

DO NOT WELD OR CUT painted or plated parts unless special precautions with ventilation have been taken. They can release highly toxic fumes or gases.

Additional precautionary measures

PROTECT compressed gas cylinders from excessive heat, mechanical shocks, and arcs; fasten cylinders so they cannot fall.

BE SURE cylinders are never grounded or part of an electrical circuit.

REMOVE all potential fire hazards from welding area.

ALWAYS HAVE FIRE FIGHTING EQUIPMENT READY FOR IMMEDIATE USE AND KNOW HOW TO USE IT.

SECTION A: WARNINGS

CALIFORNIA PROPOSITION 65 WARNINGS

WARNING: Breathing diesel engine exhaust exposes you to chemicals known to the State of California to cause cancer and birth defects, or other reproductive harm.

- Always start and operate the engine in a well-ventilated area.
- If in an exposed area, vent the exhaust to the outside.
- Do not modify or tamper with the exhaust system.
- Do not idle the engine except as necessary.

For more information go to www.P65 warnings.ca.gov/diesel

WARNING: This product, when used for welding or cutting, produces fumes or gases which contain chemicals known to the State of California to cause birth defects and, in some cases, cancer. (California Health & Safety Code § 25249.5 *et seq.)*

WARNING: Cancer and Reproductive Harm www.P65warnings.ca.gov

ARC WELDING CAN BE HAZARDOUS. PROTECT YOURSELF AND OTHERS FROM POSSIBLE SERIOUS INJURY OR DEATH. KEEP CHILDREN AWAY. PACEMAKER WEARERS SHOULD CONSULT WITH THEIR DOCTOR BEFORE OPERATING.

Read and understand the following safety highlights. For additional safety information, it is strongly recommended that you purchase a copy of "Safety in Welding & Cutting - ANSI Standard Z49.1" from the American Welding Society, P.O. Box 351040, Miami, Florida 33135 or CSA Standard W117.2-1974. A Free copy of "Arc Welding Safety" booklet E205 is available from the Lincoln Electric Company, 22801 St. Clair Avenue, Cleveland, Ohio 44117-1199.

BE SURE THAT ALL INSTALLATION, OPERATION, MAINTENANCE AND REPAIR PROCEDURES ARE PERFORMED ONLY BY QUALIFIED INDIVIDUALS.

FOR ENGINE POWERED EQUIPMENT.

1.a. Turn the engine off before troubleshooting and maintenance work unless the maintenance work requires it to be running.

1.b. Operate engines in open, well-ventilated areas or vent the engine exhaust fumes outdoors.

1.c. Do not add the fuel near an open flame welding arc or when the engine is running. Stop the engine and allow it to cool before refueling to prevent spilled fuel from vaporizing on contact with hot engine parts and igniting. Do not spill fuel when filling tank. If fuel is spilled, wipe it up and do not start engine until fumes have been eliminated.

1.d. Keep all equipment safety guards, covers and devices in position and in good repair. Keep hands, hair, clothing and tools away from V-belts, gears, fans and all other moving parts when starting, operating or repairing equipment.

1.e. In some cases it may be necessary to remove safety guards to perform required maintenance. Remove guards only when necessary and replace them when the maintenance requiring their removal is complete. Always use the greatest care when working near moving parts.

1.f. Do not put your hands near the engine fan. Do not attempt to override the governor or idler by pushing on the throttle control rods while the engine is running.

1.g. To prevent accidentally starting gasoline engines while turning the engine or welding generator during maintenance work, disconnect the spark plug wires, distributor cap or magneto wire as appropriate.

1.h. To avoid scalding, do not remove the radiator pressure cap when the engine is hot.

ELECTRIC AND MAGNETIC FIELDS MAY BE DANGEROUS

2.a. Electric current flowing through any conductor causes localized Electric and Magnetic Fields (EMF). Welding current creates EMF fields around welding cables and welding machines

2.b. EMF fields may interfere with some pacemakers, and welders having a pacemaker should consult their physician before welding.

2.c. Exposure to EMF fields in welding may have other health effects which are now not known.

2.d. All welders should use the following procedures in order to minimize exposure to EMF fields from the welding circuit:

2.d.1. Route the electrode and work cables together - Secure them with tape when possible.

2.d.2. Never coil the electrode lead around your body.

2.d.3. Do not place your body between the electrode and work cables. If the electrode cable is on your right side, the work cable should also be on your right side.

2.d.4. Connect the work cable to the workpiece as close as possible to the area being welded.

2.d.5. Do not work next to welding power source.

ELECTRIC SHOCK CAN KILL.

3.a. The electrode and work (or ground) circuits are electrically "hot" when the welder is on. Do not touch these "hot" parts with your bare skin or wet clothing. Wear dry, hole-free gloves to insulate hands.

3.b. Insulate yourself from work and ground using dry insulation. Make certain the insulation is large enough to cover your full area of physical contact with work and ground.

In addition to the normal safety precautions, if welding must be performed under electrically hazardous conditions (in damp locations or while wearing wet clothing; on metal structures such as floors, gratings or scaffolds; when in cramped positions such as sitting, kneeling or lying, if there is a high risk of unavoidable or accidental contact with the workpiece or ground) use the following equipment:

- Semiautomatic DC Constant Voltage (Wire) Welder.
- DC Manual (Stick) Welder.
- AC Welder with Reduced Voltage Control.

3.c. In semiautomatic or automatic wire welding, the electrode, electrode reel, welding head, nozzle or semiautomatic welding gun are also electrically "hot".

3.d. Always be sure the work cable makes a good electrical connection with the metal being welded. The connection should be as close as possible to the area being welded.

3.e. Ground the work or metal to be welded to a good electrical (earth) ground.

3.f. Maintain the electrode holder, work clamp, welding cable and welding machine in good, safe operating condition. Replace damaged insulation.

3.g. Never dip the electrode in water for cooling.

3.h. Never simultaneously touch electrically "hot" parts of electrode holders connected to two welders because voltage between the two can be the total of the open circuit voltage of both welders.

3.i. When working above floor level, use a safety belt to protect yourself from a fall should you get a shock.

3.j. Also see Items 6.c. and 8.

ARC RAYS CAN BURN.

4.a. Use a shield with the proper filter and cover plates to protect your eyes from sparks and the rays of the arc when welding or observing open arc welding. Headshield and filter lens should conform to ANSI Z87. I standards.

4.b. Use suitable clothing made from durable flame-resistant material to protect your skin and that of your helpers from the arc rays.

4.c. Protect other nearby personnel with suitable, non-flammable screening and/or warn them not to watch the arc nor expose themselves to the arc rays or to hot spatter or metal.

FUMES AND GASES CAN BE DANGEROUS.

5.a. Welding may produce fumes and gases hazardous to health. Avoid breathing these fumes and gases. When welding, keep your head out of the fume. Use enough ventilation and/or exhaust at the arc to keep fumes and gases away from the breathing zone. **When welding hardfacing (see instructions on container or SDS) or on lead or cadmium plated steel and other metals or coatings which produce highly toxic fumes, keep exposure as low as possible and within applicable OSHA PEL and ACGIH TLV limits using local exhaust or mechanical ventilation unless exposure assessments indicate otherwise. In confined spaces or in some circumstances, outdoors, a respirator may also be required. Additional precautions are also required when welding on galvanized steel.**

5. b. The operation of welding fume control equipment is affected by various factors including proper use and positioning of the equipment, maintenance of the equipment and the specific welding procedure and application involved. Worker exposure level should be checked upon installation and periodically thereafter to be certain it is within applicable OSHA PEL and ACGIH TLV limits.

5.c. Do not weld in locations near chlorinated hydrocarbon vapors coming from degreasing, cleaning or spraying operations. The heat and rays of the arc can react with solvent vapors to form phosgene, a highly toxic gas, and other irritating products.

5.d. Shielding gases used for arc welding can displace air and cause injury or death. Always use enough ventilation, especially in confined areas, to insure breathing air is safe.

5.e. Read and understand the manufacturer's instructions for this equipment and the consumables to be used, including the Safety Data Sheet (SDS) and follow your employer's safety practices. SDS forms are available from your welding distributor or from the manufacturer.

5.f. Also see item 1.b.

WELDING AND CUTTING SPARKS CAN CAUSE FIRE OR EXPLOSION.

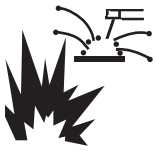

6.a. Remove fire hazards from the welding area. If this is not possible, cover them to prevent the welding sparks from starting a fire. Remember that welding sparks and hot materials from welding can easily go through small cracks and openings to adjacent areas. Avoid welding near hydraulic lines. Have a fire extinguisher readily available.

6.b. Where compressed gases are to be used at the job site, special precautions should be used to prevent hazardous situations. Refer to “Safety in Welding and Cutting” (ANSI Standard Z49.1) and the operating information for the equipment being used.

6.c. When not welding, make certain no part of the electrode circuit is touching the work or ground. Accidental contact can cause overheating and create a fire hazard.

6.d. Do not heat, cut or weld tanks, drums or containers until the proper steps have been taken to insure that such procedures will not cause flammable or toxic vapors from substances inside. They can cause an explosion even though they have been “cleaned”. For information, purchase “Recommended Safe Practices for the Preparation for Welding and Cutting of Containers and Piping That Have Held Hazardous Substances”, AWS F4.1 from the American Welding Society (see address above).

6.e. Vent hollow castings or containers before heating, cutting or welding. They may explode.

6.f. Sparks and spatter are thrown from the welding arc. Wear oil free protective garments such as leather gloves, heavy shirt, cuffless trousers, high shoes and a cap over your hair. Wear ear plugs when welding out of position or in confined places. Always wear safety glasses with side shields when in a welding area.

6.g. Connect the work cable to the work as close to the welding area as practical. Work cables connected to the building framework or other locations away from the welding area increase the possibility of the welding current passing through lifting chains, crane cables or other alternate circuits. This can create fire hazards or overheat lifting chains or cables until they fail.

6.h. Also see item 1.c.

6.I. Read and follow NFPA 51B “Standard for Fire Prevention During Welding, Cutting and Other Hot Work”, available from NFPA, 1 Batterymarch Park, PO box 9101, Quincy, MA 022690-9101.

6.j. Do not use a welding power source for pipe thawing.

CYLINDER MAY EXPLODE IF DAMAGED.

7.a. Use only compressed gas cylinders containing the correct shielding gas for the process used and properly operating regulators designed for the gas and pressure used. All hoses, fittings, etc. should be suitable for the application and maintained in good condition.

7.b. Always keep cylinders in an upright position securely chained to an undercarriage or fixed support.

7.c. Cylinders should be located:

- Away from areas where they may be struck or subjected to physical damage.
- A safe distance from arc welding or cutting operations and any other source of heat, sparks, or flame.

7.d. Never allow the electrode, electrode holder or any other electrically “hot” parts to touch a cylinder.

7.e. Keep your head and face away from the cylinder valve outlet when opening the cylinder valve.

7.f. Valve protection caps should always be in place and hand tight except when the cylinder is in use or connected for use.

7.g. Read and follow the instructions on compressed gas cylinders, associated equipment, and CGA publication P-I, “Precautions for Safe Handling of Compressed Gases in Cylinders,” available from the Compressed Gas Association, 14501 George Carter Way Chantilly, VA 20151.

FOR ELECTRICALLY POWERED EQUIPMENT.

8.a. Turn off input power using the disconnect switch at the fuse box before working on the equipment.

8.b. Install equipment in accordance with the U.S. National Electrical Code, all local codes and the manufacturer’s recommendations.

8.c. Ground the equipment in accordance with the U.S. National Electrical Code and the manufacturer’s recommendations.

Refer to http://www.lincolnelectric.com/safety for additional safety information.

PRÉCAUTIONS DE SÛRETÉ

Pour votre propre protection lire et observer toutes les instructions et les précautions de sûreté specifiques qui parraissent dans ce manuel aussi bien que les précautions de sûreté générales suivantes:

Sûreté Pour Soudage A L'Arc

1. Protegez-vous contre la secousse électrique:

   a. Les circuits à l'électrode et à la piéce sont sous tension quand la machine à souder est en marche. Eviter toujours tout contact entre les parties sous tension et la peau nue ou les vétements mouillés. Porter des gants secs et sans trous pour isoler les mains.
   b. Faire trés attention de bien s'isoler de la masse quand on soude dans des endroits humides, ou sur un plancher metallique ou des grilles metalliques, principalement dans les positions assis ou couché pour lesquelles une grande partie du corps peut être en contact avec la masse.
   c. Maintenir le porte-électrode, la pince de masse, le câble de soudage et la machine à souder en bon et sûr état defonctionnement.
   d. Ne jamais plonger le porte-électrode dans l'eau pour le refroidir.
   e. Ne jamais toucher simultanément les parties sous tension des porte-électrodes connectés à deux machines à souder parce que la tension entre les deux pinces peut être le total de la tension à vide des deux machines.
   f. Si on utilise la machine à souder comme une source de courant pour soudage semi-automatique, ces precautions pour le porte-électrode s'applicuent aussi au pistolet de soudage.

2. Dans le cas de travail au dessus du niveau du sol, se protéger contre les chutes dans le cas ou on recoit un choc. Ne jamais enrouler le câble-électrode autour de n'importe quelle partie du corps.

3. Un coup d'arc peut être plus sévère qu'un coup de soliel, donc:

   a. Utiliser un bon masque avec un verre filtrant approprié ainsi qu'un verre blanc afin de se protéger les yeux du rayonnement de l'arc et des projections quand on soude ou quand on regarde l'arc.
   b. Porter des vêtements convenables afin de protéger la peau de soudeur et des aides contre le rayonnement de l'arc.
   c. Protéger l'autre personnel travaillant à proximité au soudage à l'aide d'écrans appropriés et non-inflammables.

4. Des gouttes de laitier en fusion sont émises de l'arc de soudage. Se protéger avec des vêtements de protection libres de l'huile, tels que les gants en cuir, chemise épaisse, pantalons sans revers, et chaussures montantes.

5. Toujours porter des lunettes de sécurité dans la zone de soudage. Utiliser des lunettes avec écrans lateraux dans les zones où l'on pique le laitier.

6. Eloigner les matériaux inflammables ou les recouvrir afin de prévenir tout risque d'incendie dû aux étincelles.

7. Quand on ne soude pas, poser la pince à une endroit isolé de la masse. Un court-circuit accidental peut provoquer un échauffement et un risque d'incendie.

8. S'assurer que la masse est connectée le plus prés possible de la zone de travail qu'il est pratique de le faire. Si on place la masse sur la charpente de la construction ou d'autres endroits éloignés de la zone de travail, on augmente le risque de voir passer le courant de soudage par les chaines de levage, câbles de grue, ou autres circuits. Cela peut provoquer des risques d'incendie ou d'echauffement des chaines et des câbles jusqu'à ce qu'ils se rompent.

9. Assurer une ventilation suffisante dans la zone de soudage. Ceci est particuliérement important pour le soudage de tôles galvanisées plombées, ou cadmiées ou tout autre métal qui produit des fumeés toxiques.

10. Ne pas souder en présence de vapeurs de chlore provenant d'opérations de dégraissage, nettoyage ou pistolage. La chaleur ou les rayons de l'arc peuvent réagir avec les vapeurs du solvant pour produire du phosgéne (gas fortement toxique) ou autres produits irritants.

11. Pour obtenir de plus amples renseignements sur la sûreté, voir le code "Code for safety in welding and cutting" CSA Standard W 117.2-1974.

PRÉCAUTIONS DE SÛRETÉ POUR LES MACHINES À SOUDER À TRANSFORMATEUR ET À REDRESSEUR

1. Relier à la terre le chassis du poste conformement au code de l'électricité et aux recommendations du fabricant. Le dispositif de montage ou la piece à souder doit être branché à une bonne mise à la terre.

2. Autant que possible, l'installation et l'entretien du poste seront effectués par un électricien qualifié.

3. Avant de faires des travaux à l'interieur de poste, la debrancher à l'interrupteur à la boite de fusibles.

4. Garder tous les couvercles et dispositifs de sûreté à leur place.

Electromagnetic Compatibility (EMC)

Conformance
Products displaying the CE mark are in conformity with European Community Council Directive of 15 Dec 2004 on the approximation of the laws of the Member States relating to electromagnetic compatibility, 2004/108/EC. It was manufactured in conformity with a national standard that implements a harmonized standard: EN 60974-10 Electromagnetic Compatibility (EMC) Product Standard for Arc Welding Equipment. It is for use with other Lincoln Electric equipment. It is designed for industrial and professional use.

Introduction
All electrical equipment generates small amounts of electromagnetic emission. Electrical emission may be transmitted through power lines or radiated through space, similar to a radio transmitter. When emissions are received by other equipment, electrical interference may result. Electrical emissions may affect many kinds of electrical equipment; other nearby welding equipment, radio and TV reception, numerical controlled machines, telephone systems, computers, etc.
WARNING: This equipment is not intended for use in residential locations where the electrical power is provided by the public low-voltage supply system. There may be potential difficulties in ensuring electromagnetic compatibility in those locations, due to conducted as well as radiated disturbances.

Installation and Use
The user is responsible for installing and using the welding equipment according to the manufacturer's instructions. If electromagnetic disturbances are detected then it shall be the responsibility of the user of the welding equipment to resolve the situation with the technical assistance of the manufacturer. In some cases this remedial action may be as simple as earthing (grounding) the welding circuit, see Note. In other cases it could involve construction of an electromagnetic screen enclosing the power source and the work complete with associated input filters. In all cases electromagnetic disturbances must be reduced to the point where they are no longer troublesome.

Note: The welding circuit may or may not be earthed for safety reasons. Follow your local and national standards for installation and use. Changing the earthing arrangements should only be authorized by a person who is competent to assess whether the changes will increase the risk of injury, e.g., by allowing parallel welding current return paths which may damage the earth circuits of other equipment.

Assessment of Area
Before installing welding equipment the user shall make an assessment of potential electromagnetic problems in the surrounding area. The following shall be taken into account:

a) other supply cables, control cables, signaling and telephone cables; above, below and adjacent to the welding equipment;

b) radio and television transmitters and receivers;

c) computer and other control equipment;

d) safety critical equipment, e.g., guarding of industrial equipment;

e) the health of the people around, e.g., the use of pacemakers and hearing aids;

f) equipment used for calibration or measurement;

g) the immunity of other equipment in the environment. The user shall ensure that other equipment being used in the environment is compatible. This may require additional protection measures;

h) the time of day that welding or other activities are to be carried out.

Electromagnetic Compatibility (EMC)

The size of the surrounding area to be considered will depend on the structure of the building and other activities that are taking place. The surrounding area may extend beyond the boundaries of the premises.

Methods of Reducing Emissions

Public Supply System
Welding equipment should be connected to the public supply system according to the manufacturer's recommendations. If interference occurs, it may be necessary to take additional precautions such as filtering of the public supply system. Consideration should be given to shielding the supply cable of permanently installed welding equipment, in metallic conduit or equivalent. Shielding should be electrically continuous throughout its length. The shielding should be connected to the welding power source so that good electrical contact is maintained between the conduit and the welding power source enclosure.

Maintenance of the Welding Equipment
The welding equipment should be routinely maintained according to the manufacturer's recommendations. All access and service doors and covers should be closed and properly fastened when the welding equipment is in operation. The welding equipment should not be modified in any way except for those changes and adjustments covered in the manufacturers instructions. In particular, the spark gaps of arc striking and stabilizing devices should be adjusted and maintained according to the manufacturer's recommendations.

Welding Cables
The welding cables should be kept as short as possible and should be positioned close together, running at or close to floor level.

Equipotential Bonding
Bonding of all metallic components in the welding installation and adjacent to it should be considered. However, metallic components bonded to the work piece will increase the risk that the operator could receive a shock by touching these metallic components and the electrode at the same time. The operator should be insulated from all such bonded metallic components.

Earthing of the Workpiece
Where the workpiece is not bonded to earth for electrical safety, nor connected to earth because of its size and position, e.g., ship's hull or building steelwork, a connection bonding the workpiece to earth may reduce emissions in some, but not all instances. Care should be taken to prevent the earthing of the workpiece increasing the risk of injury to users, or damage to other electrical equipment. Where necessary, the connection of the workpiece to earth should be made by a direct connection to the workpiece, but in some countries where direct connection is not permitted, the bonding should be achieved by suitable capacitance, selected according to national regulations.

Screening and Shielding
Selective screening and shielding of other cables and equipment in the surrounding area may alleviate problems of interference. Screening of the entire welding installation may be considered for special applications[1].

---

[1] Portions of the preceding text are contained in EN 60974-10: "Electromagnetic Compatibility (EMC) product standard for arc welding equipment."

TABLE OF CONTENTS

Page

Installation ..... Section A
Technical Specifications A-1, A-2
Safety Precautions A-3
Location, Lifting A-3
Stacking A-3
Tilting A-3
Input and Ground Connections A-3
Machine Grounding A-3
High Frequency Protection A-3
Input Connection A-4
Input Fuse and Supply Wire A-4
Input Voltage Selection A-4
Connection Diagram A-5, A-6, A-7
Recommended Work Cable Sizes A-8
Cable Inductance and its Effects on Welding A-9
Remote Sense Lead Specifications A-9, A-10
Voltage Sensing Considerations for Multiple Arc Systems A-11, A-12
Control Cable Connections A-13

Operation ..... Section B
Safety Precautions B-1
Power-Up Sequence B-1
Duty Cycle B-1
Graphic Symbols B-1
Product Description B-2
Recommended Processes and Equipment B-2
Equipment Limitations B-2
Design Features B-3
Case Front Controls B-3
Case Back Controls B-4
Common Welding Procedures ..... B-5 thru B-7

Accessories ..... Section C
Kits, Options / Accessories C-1
Field Installed Options C-1
Stick Operations C-2

Maintenance ..... Section D
Safety Precautions D-1
Routine Maintenance D-1
Periodic Maintenance D-1
Calibration Specification D-1

Troubleshooting ..... Section E
Safety Precautions E-1
How to Use Troubleshooting Guide E-1
Using Status LED, Error Fault Codes and Input Control Board E-2, E-4
Troubleshooting Guide ..... E-5 thru E-8

Wiring Diagram and Dimension Print ..... Section F

Parts Pages ..... P-705 Series

TECHNICAL SPECIFICATIONS - POWER WAVE® S500CE

POWER SOURCE-INPUT VOLTAGE AND CURRENT					
Model	**Duty Cycle**	**Input Voltage ± 10%**	**Input Amperes**	**Idle Power**	**Power Factor @ Rated Output**
K3168-1	40% rating	230/400*460/575 50/60 Hz **(includes 380V to 415V)**	67/41/34/27	300 Watts Max. (fan on)	.95
	100% rating		50/30/25/20		

RATED OUTPUT									
INPUT VOLTAGE/PHASE/ FREQUENCY	**GMAW**			**SMAW**			**GTAW-DC**		
	40%	**60%**	**100%**	**40%**	**60%**	**100%**	**40%**	**60%**	**100%**
230/3/50/60 380-415/3/50/60 460/3/50/60 575/3/50/60*	550 Amps 41.5 Volts	500 Amps 39 Volts	450 Amps 36.5 Volts	550 Amps 42 Volts	500 Amps 40 Volts	450 Amps 38 Volts	550 Amps 32 Volts	500 Amps 30 Volts	450 Amps 28 Volts

RECOMMENDED INPUT WIRE AND FUSE SIZES [1]			
INPUT VOLTAGE / PHASE/ FREQUENCY	**MAXIMUM INPUT AMPERE RATING AND DUTY CYCLE**	**CORD SIZE [3] AWG SIZES (mm^2)**	**TIME DELAY FUSE OR BREAKER [2] AMPERAGE**
230/3/50/60	67A, 40%	4 (21)	90
380-415/3/50/60 [4]	41A, 40%	8 (10)	60
460/3/50/60 [4]	34A, 40%	8 (10)	45
575/3/50/60	27A, 40%	10 (7)	35

* For voltages higher than 460V or applications outside the European union replace input cord with properly rated cable.

1. Based on U.S. National electrical Code.

2. Also called " inverse time" or "thermal / magnetic" circuit breakers; circuit breakers that have a delay in tripping action that decreases as the magnitude of the current increases.

3. Type SO cord or similar in 30° C ambient at effective current rating of unit.

4. Supplied K3168-1 input cord for these input applications only. For all others consult chart and connect per electical code.

WELDING PROCESS			
PROCESS	OUTPUT RANGE (AMPERES)	OCV (U_o)	
		Mean	Peak
GMAW	40-550A	60V	100V
GMAW-Pulse			
FCAW			
GTAW-DC	5-550A	24V	
SMAW	15-550A	60V	

PHYSICAL DIMENSIONS				
MODEL	HEIGHT	WIDTH	DEPTH	WEIGHT
K3168-1	22.45 in (570 mm)	14.00in (356 mm)	24.80in (630mm)	150 lbs (68 kg)*

TEMPERATURE RANGES	
OPERATING TEMPERATURE RANGE Environmentally Hardened: -4°F to 104°F (-20C to 40C)	**STORAGE TEMPERATURE RANGE** Environmentally Hardened: -40°F to 185°F (-40C to 85C)

IP23 155º(F) Insulation Class

Thermal tests have been performed at ambient temperature. The duty cycle (duty factor) at 40°C has been determined by simulation.

SAFETY PRECAUTIONS Read this entire installation section before you start installation.

WARNING

ELECTRIC SHOCK can kill.

- **Only qualified personnel should perform this installation.**
- **Turn the input power OFF at the disconnect switch or fuse box before working on this equipment. Turn off the input power to any other equipment connected to the welding system at the disconnect switch or fuse box before working on the equipment.**
- **Do not touch electrically hot parts.**
- **Always connect the POWER WAVE® S500CE grounding lug to a proper safety (Earth) ground.**

SELECT SUITABLE LOCATION

The POWER WAVE® S500CE will operate in harsh environments. Even so, it is important that simple preventative measures are followed in order to assure long life and reliable operation.

- The machine must be located where there is free circulation of clean air such that air movement in the back, out the sides and bottom will not be restricted.
- Dirt and dust that can be drawn into the machine should be kept to a minimum. The use of air filters on the air intake is not recommended because normal air flow may be restricted. Failure to observe these precautions can result in excessive operating temperatures and nuisance shutdown.
- Keep machine dry. Shelter from rain and snow. Do not place on wet ground or in puddles.
- Do not mount the POWER WAVE® S500CE over combustible surfaces. Where there is a combustible surface directly under stationary or fixed electrical equipment, that surface shall be covered with a steel plate at least .060” (1.6mm) thick, which shall extend not less than 5.90” (150mm) beyond the equipment on all sides.

LIFTING

Both handles should be used when lifting POWER WAVE® S500CE. When using a crane or overhead device a lifting strap should be connected to both handles. Do not attempt to lift the POWER WAVE® S500CE with accessories attached to it.

WARNING

- **Lift only with equipment of adequate lifting capacity.**
- **Be sure machine is stable when lifting.**
- **Do not operate machine while suspended when lifting.**

FALLING EQUIPMENT can cause injury.

STACKING

The POWER WAVE® S500CE cannot be stacked.

TILTING

Place the machine directly on a secure, level surface or on a recommended undercarriage. The machine may topple over if this procedure is not followed.

INPUT AND GROUND CONNECTIONS

Only a qualified electrician should connect the POWER WAVE® S500CE. Installation should be made in accordance with the appropriate National Electrical Code, all local codes and the information in this manual.

MACHINE GROUNDING ⏚

The frame of the welder must be grounded. A ground terminal marked with a ground symbol is located next to the input power connection block.

See your local and national electrical codes for proper grounding methods.

HIGH FREQUENCY PROTECTION

Locate the POWER WAVE® S500CE away from radio controlled machinery. The normal operation of the POWER WAVE® S500 may adversely affect the operation of RF controlled equipment, which may result in bodily injury or damage to the equipment.

⚠ WARNING

Only a qualified electrician should connect the input leads to the POWER WAVE® S500CE. Connections should be made in accordance with all local and national electrical codes and the connection diagrams. Failure to do so may result in bodily injury or death.

INPUT CONNECTION

(See Figure A.1)

For Three Phase Input Connect green lead to ground per National Electric Code. Connect black, grey and brown leads to power.

Use a three-phrase supply line. A 1.40 inch diameter access hole with strain relief is located on the case back. Route input power cable through this hole and connect L1, L2, L3 and ground per connection diagrams and National Electric Code. To access the input power connection block, remove three screws holding the access door to the side of the machine.

ALWAYS CONNECT THE POWER WAVE **GROUNDING LUG** (LOCATED AS SHOWN IN FIGURE A.1) TO A PROPER SAFETY (EARTH) GROUND.

INPUT FUSE AND SUPPLY WIRE CONSIDERATIONS

Refer to Specification Section for recommended fuse, wire sizes and type of the copper wires. Fuse the input circuit with the recommended super lag fuse or delay type breakers (also called "inverse time" or "thermal/magnetic" circuit breakers). Choose input and grounding wire size according to local or national electrical codes. Using input wire sizes, fuses or circuit breakers smaller than recommended may result in "nuisance" shut-offs from welder inrush currents, even if the machine is not being used at high currents.

INPUT VOLTAGE SELECTION

The POWER WAVE® S500CE automatically adjusts to work with different input voltages. No reconnect switch settings are required.

⚠ WARNING

The POWER WAVE® S500CE ON/OFF switch is not intended as a service disconnect for this equipment. Only a qualified electrician should connect the input leads to the POWER WAVE® S500CE. Connections should be made in accordance with all local and national electrical codes and the connection diagram located on the inside of the reconnect access door of the machine. Failure to do so may result in bodily injury or death.

FIGURE A.1

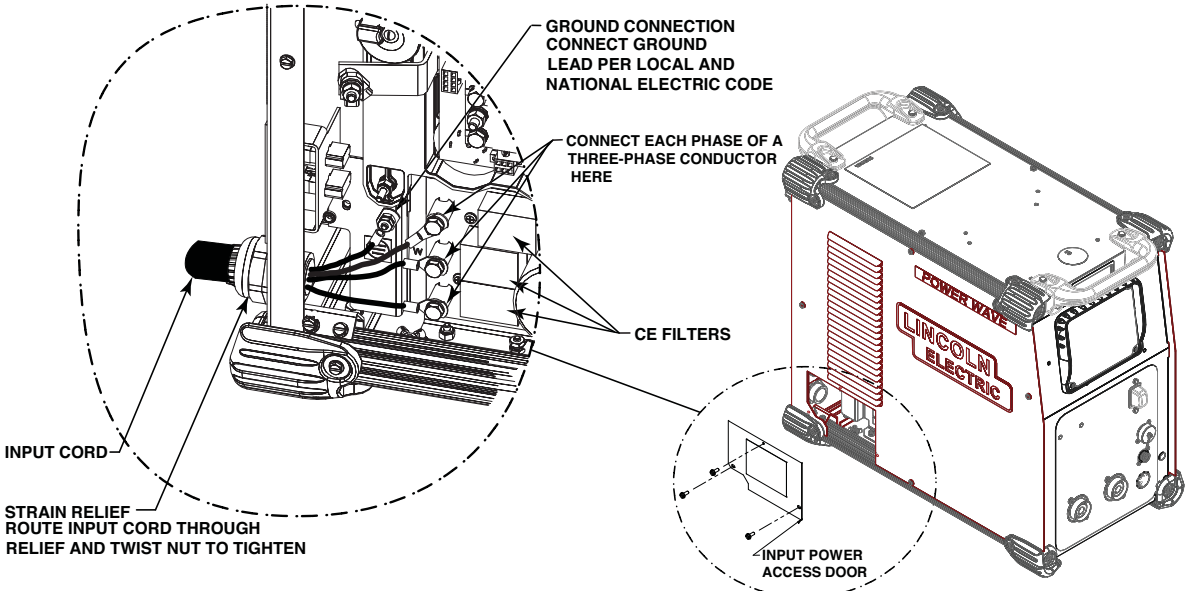

CONNECTION DIAGRAMS

GTAW (TIG) WELDING

TIG welding from a LF-45 wire feeder can be used with the power source as shown in **(Figure A.2)**,

SMAW (STICK) WELDING

FIGURE A.2

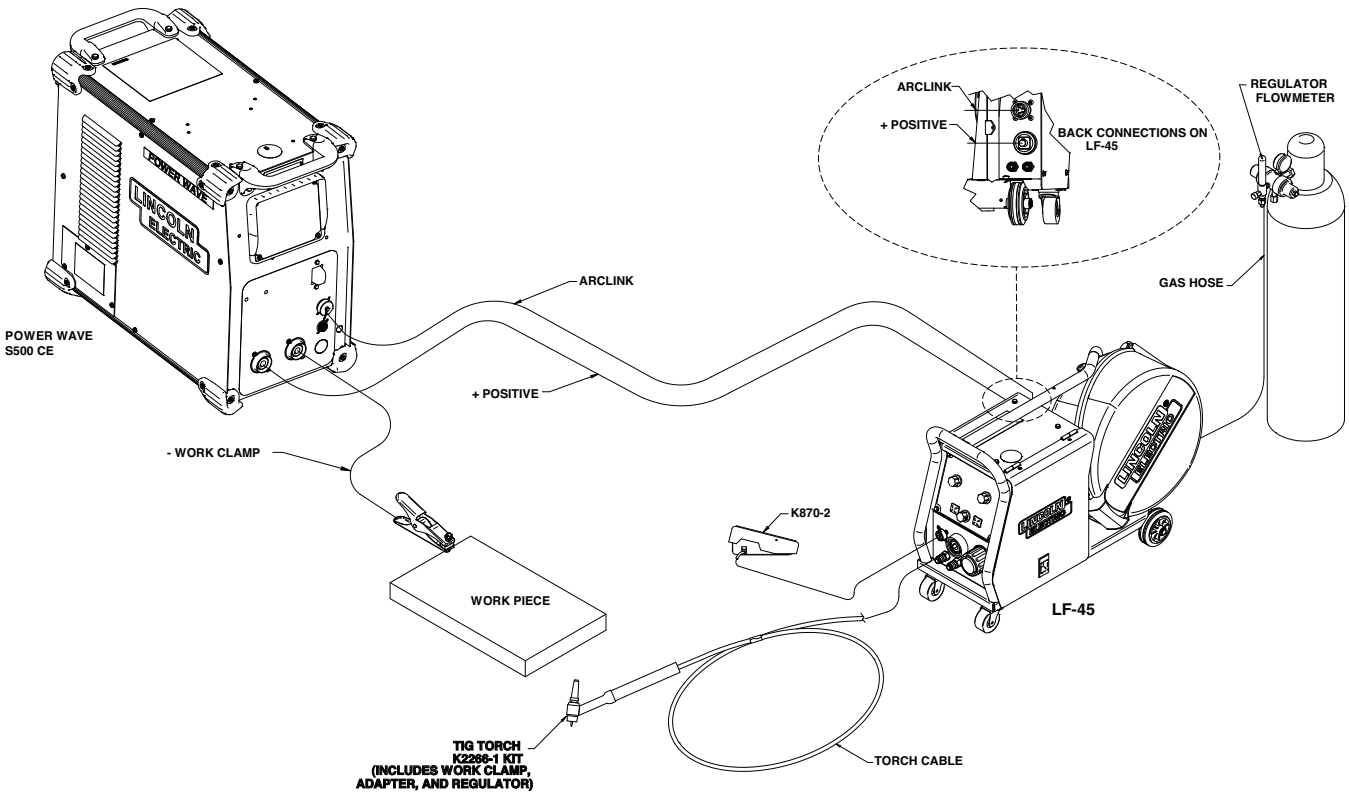

SMAW (STICK) WELDING

Stick welding from a LF-45 wire feeder can be used with the power source as shown in **(Figure A.3)**.

FIGURE A.3

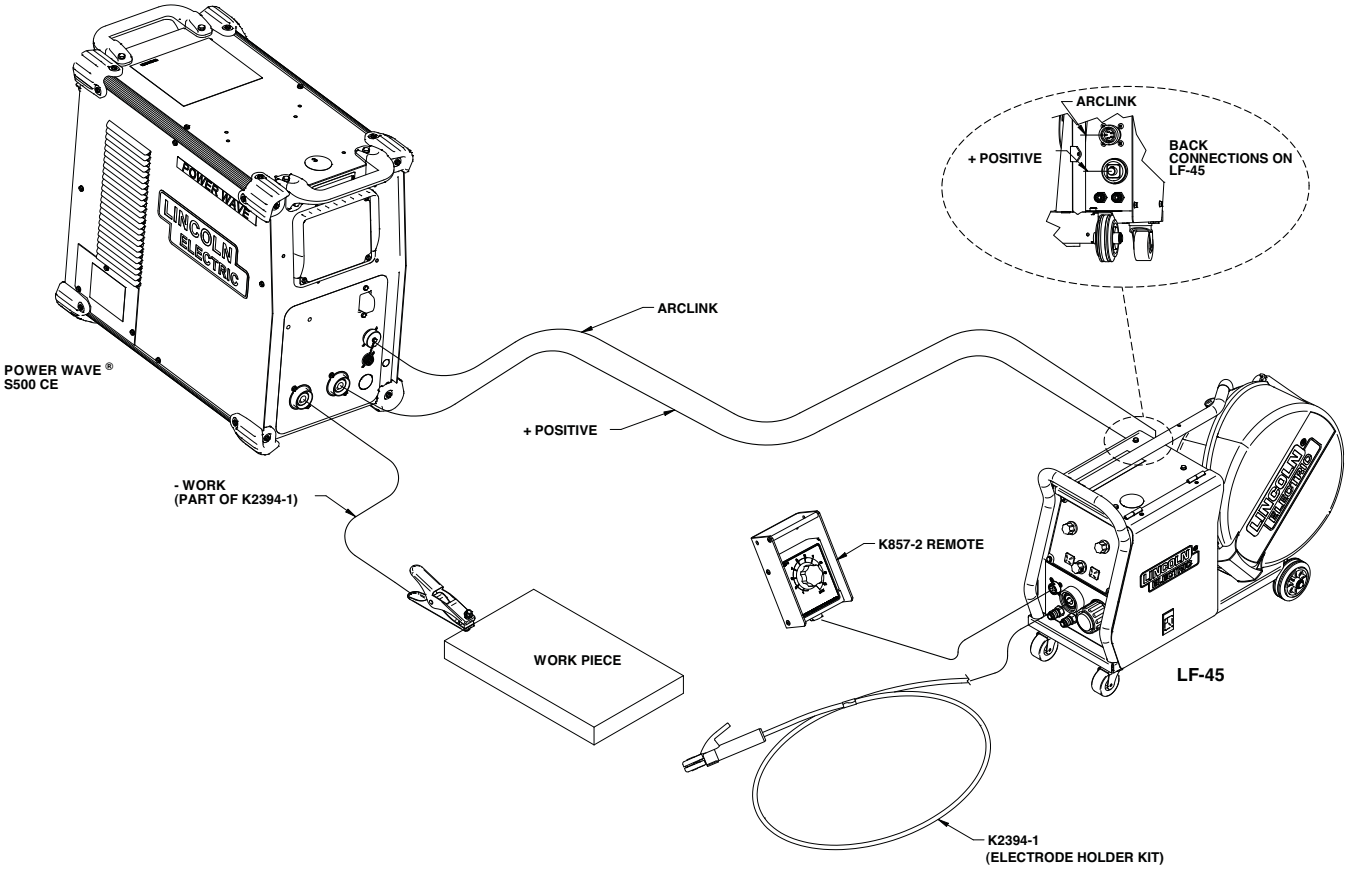

GMAW (MIG) WELDING

MIG welding from a LF-45 wire feeder can be used with the power source as shown in **(Figure A.4)**.

FIGURE A4

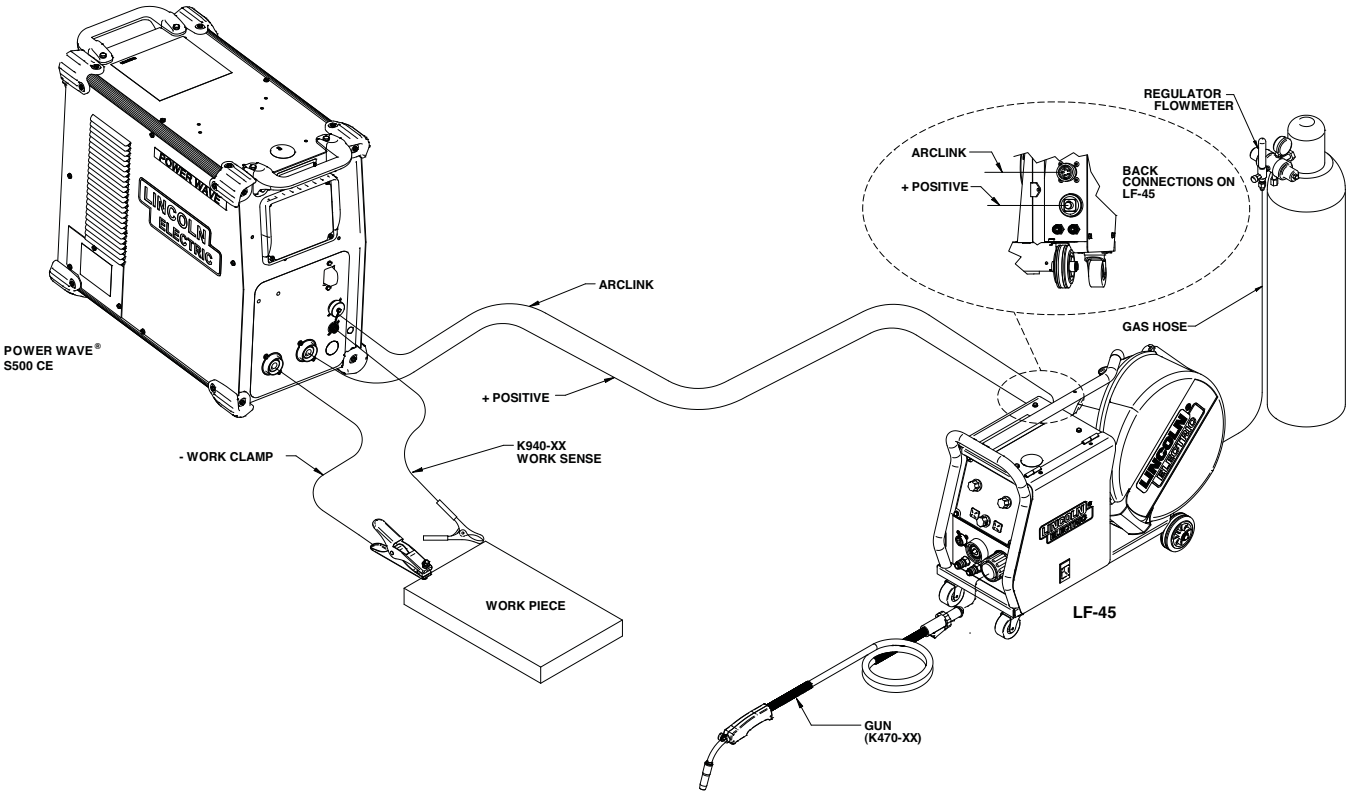

RECOMMENDED WORK CABLE SIZES FOR ARC WELDING

Connect the electrode and work cables between the appropriate output studs of the POWER WAVE® S500CE per the following guidelines:

- Most welding applications run with the electrode being positive (+). For those applications, connect the electrode cable between the wire drive feed plate and the positive (+) output stud on the power source. Connect a work lead from the negative (-) power source output stud to the work piece
- When negative electrode polarity is required, such as in some Innershield applications, reverse the output connections at the power source (electrode cable to the negative (-) stud, and work cable to the positive (+) stud).

⚠ CAUTION

Negative electrode polarity operation WITHOUT use of a remote work sense lead (21) requires the Negative Electrode Polarity attribute to be set. See the Remote Sense Lead Specification section of this document for further details.

For additional Safety information regarding the electrode and work cable set-up, See the standard "**SAFETY INFORMATION**" located in the front of this Instruction Manual.

General Guidelines

- **Select the appropriate size cables per the "Output Cable Guidelines" below.** Excessive voltage drops caused by undersized welding cables and poor connections often result in unsatisfactory welding performance. Always use the largest welding cables (electrode and work) that are practical, and be sure all connections are clean and tight.

Note: Excessive heat in the weld circuit indicates undersized cables and/or bad connections.

- **Route all cables directly to the work and wire feeder, avoid excessive lengths and do not coil excess cable.** Route the electrode and work cables in close proximity to one another to minimize the loop area and therefore the inductance of the weld circuit.

- **Always weld in a direction away from the work (ground) connection.**

Table A.1 shows copper cable sizes recommended for different currents and duty cycles. Lengths stipulated are the distance from the welder to work and back to the welder again. Cable sizes are increased for greater lengths primarily for the purpose of minimizing cable drop.

OUTPUT CABLE GUIDELINES (Table A.1)

Amperes	Percent Duty Cycle	CABLE SIZES FOR COMBINED LENGTHS OF ELECTRODE AND WORK CABLES [RUBBER COVERED COPPER - RATED 167°F (75°C)]**				
		0 to 50 Ft.	50 to 100 Ft.	100 to 150 Ft.	150 to 200 Ft.	200 to 250 Ft.
200	100	2	2	2	1	1/0
250	100	1	1	1	1	1/0
300	100	2/0	2/0	2/0	2/0	3/0
350	100	2/0	2/0	3/0	3/0	4/0
400	100	3/0	3/0	3/0	3/0	4/0
450	100	3/0	3/0	4/0	4/0	2-3/0
500	60	2/0	2/0	3/0	3/0	4/0
550	40	2/0	2/0	3/0	3/0	4/0

** Tabled values are for operation at ambient temperatures of 104°F (40°C) and below. Applications above 104°F (40°C) may require cables larger than recommended, or cables rated higher than 167°F (75°C).

CABLE INDUCTANCE AND ITS EFFECTS ON WELDING

Excessive cable inductance will cause the welding performance to degrade. There are several factors that contribute to the overall inductance of the cabling system including cable size, and loop area. The loop area is defined by the separation distance between the electrode and work cables, and the overall welding loop length. The welding loop length is defined as the total of length of the electrode cable (A) + work cable (B) + work path (C) (See Figure A.5).

To minimize inductance always use the appropriate size cables, and whenever possible, run the electrode and work cables in close proximity to one another to minimize the loop area. Since the most significant factor in cable inductance is the welding loop length, avoid excessive lengths and do not coil excess cable. For long work piece lengths, a sliding ground should be considered to keep the total welding loop length as short as possible.

REMOTE SENSE LEAD SPECIFICATIONS

Voltage Sensing Overview

The best arc performance occurs when the POWER WAVE® S500CE has accurate data about the arc conditions.

Depending upon the process, inductance within the electrode and work cables can influence the voltage apparent at the studs of the welder, and have a dramatic effect on performance. Remote voltage sense leads are used to improve the accuracy of the arc voltage information supplied to the control pc board. Sense Lead Kits (K940-xx) are available for this purpose.

The POWER WAVE® S500CE has the ability to automatically sense when remote sense leads are connected. With this feature there are no requirements for setting-up the machine to use remote sense leads. This feature can be disabled through the Weld Manager Utility (available at **www.powerwavesoftware.com**) or through the set up menu (if a user interface is installed into the power source).

⚠ CAUTION

If the auto sense lead feature is disabled and remote voltage sensing is enabled but the sense leads are missing or improperly connected extremely high welding outputs may occur.

General Guidelines for Voltage Sense Leads

Sense leads should be attached as close to the weld as practical, and out of the weld current path when possible. In extremely sensitive applications it may be necessary to route cables that contain the sense leads away from the electrode and work welding cables.

Voltage sense leads requirements are based on the weld process (See Table A.2)

TABLE A.2

Process	Electrode Voltage Sensing (1) 67 lead	Work Voltage Sensing (2) 21 lead
GMAW	67 lead required	21 lead optional (3)
GMAW-P	67 lead required	21 lead optional (3)
FCAW	67 lead required	21 lead optional (3)
GTAW	Voltage sense at studs	Voltage sense at studs
SMAW	Voltage sense at studs	Voltage sense at studs

(1) The electrode voltage sense lead (67) is automatically enabled by the weld process, and integral to the 5 pin arclink control cable (K1543-xx).

(2) When a work voltage sense lead (21) is connected the power source will automatically switch over to using this feedback (if the auto sense feature is enable).

(3) Negative polarity semi-automatic process operation WITHOUT use of a remote work sense lead (21) requires the Negative Electrode Polarity attribute to be set.

FIGURE A.5

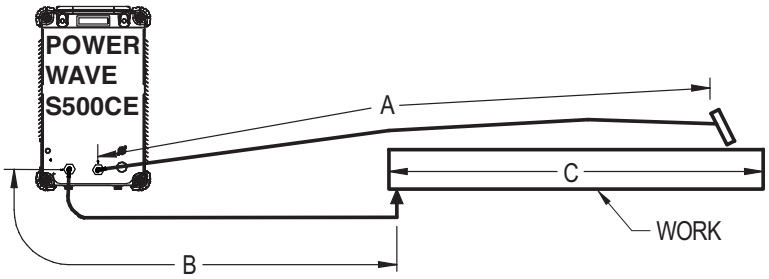

Electrode Voltage Sensing

The remote ELECTRODE sense lead (67) is built into the 5-pin arclink control cable (K1543-xx) and is always connected to the wire drive feed plate when a wire feeder is present. Enabling or disabling electrode voltage sensing is application specific, and automatically configured by the active weld mode.

Work Voltage Sensing

The Power Wave S500CE is configured at the factory to sense work voltage at the negative output stud (positive output polarity with remote Work Voltage Sensing disabled).

Negative Electrode Polarity

The Power Wave S500CE has the ability to automatically sense the polarity of the sense leads. With this feature there are no set-up requirements for welding with negative electrode polarity. This feature can be disabled through the Weld Manager Utility (available at www.powerwavesoftware.com) or through the set up menu (if a user interface is installed into the power source).

⚠ CAUTION

If the auto sense lead feature is disabled and the weld polarity attribute is improperly configured extremely high welding outputs may occur.

While most applications perform adequately by sensing the work voltage directly at the output stud, the use of a remote work voltage sense lead is recommended for optimal performance. The remote WORK sense lead (21) can be accessed through the four-pin voltage sense connector located on the control panel by using the K940 Sense Lead Kit. It must be attached to the work as close to the weld as practical, but out of the weld current path. For more information regarding the placement of remote work voltage sense leads, see the section entitled "Voltage Sensing Considerations for Multiple Arc Systems."

VOLTAGE SENSING CONSIDERATIONS FOR MULTIPLE ARC SYSTEMS

Special care must be taken when more than one arc is welding simultaneously on a single part. Multiple arc applications do not necessarily dictate the use of remote work voltage sense leads, but they are strongly recommended.

If Sense Leads ARE NOT Used:

- Avoid common current paths. Current from adjacent arcs can induce voltage into each others current paths that can be misinterpreted by the power sources, and result in arc interference.

If Sense Leads ARE Used:

- Position the sense leads out of the path of the weld current. Especially any current paths common to adjacent arcs. Current from adjacent arcs can induce voltage into each others current paths that can be misinterpreted by the power sources, and result in arc interference.

- For longitudinal applications, connect all work leads at one end of the weldment, and all of the work voltage sense leads at the opposite end of the weldment. Perform welding in the direction away from the work leads and toward the sense leads.

(See Figure A.6)

FIGURE A.6

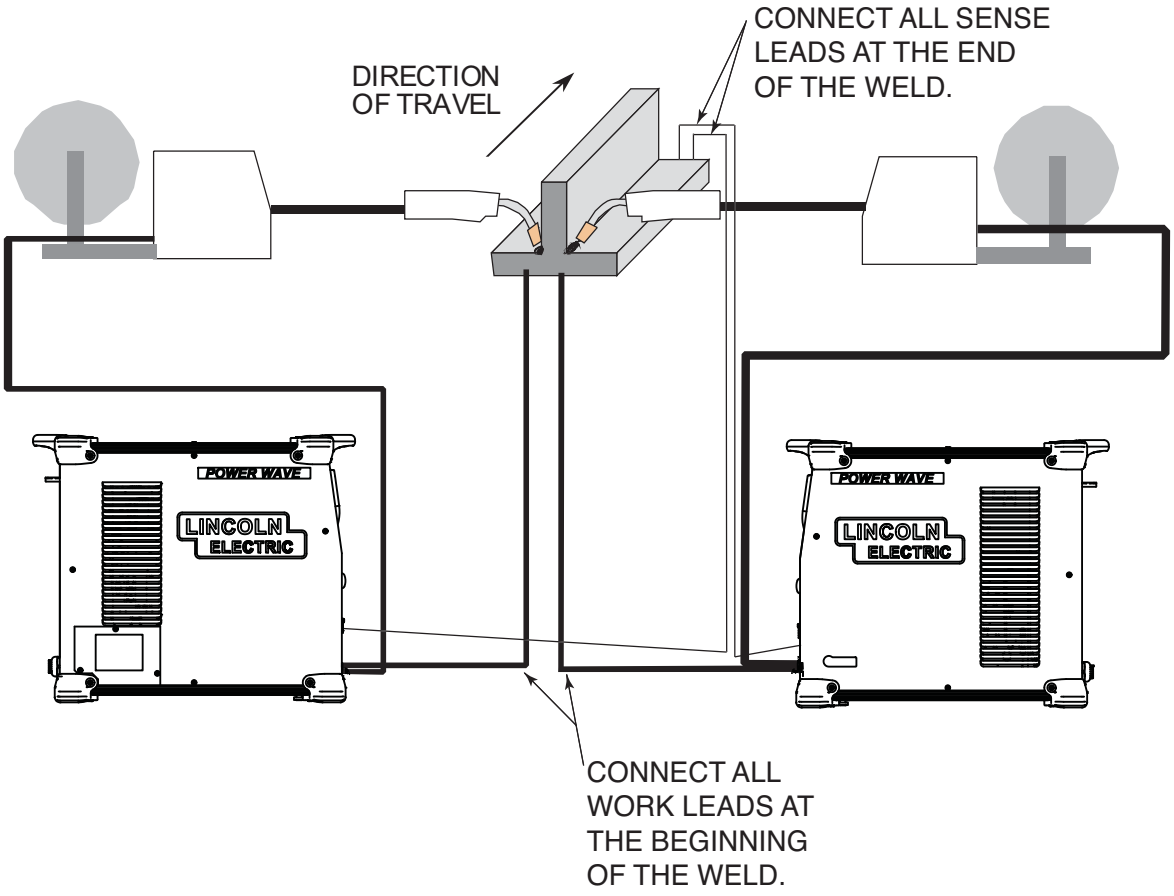

- **For circumferential applications**, connect all work leads on one side of the weld joint, and all of the work voltage sense leads on the opposite side, such that they are out of the current path.

(See Figure A.7)

FIGURE A.7

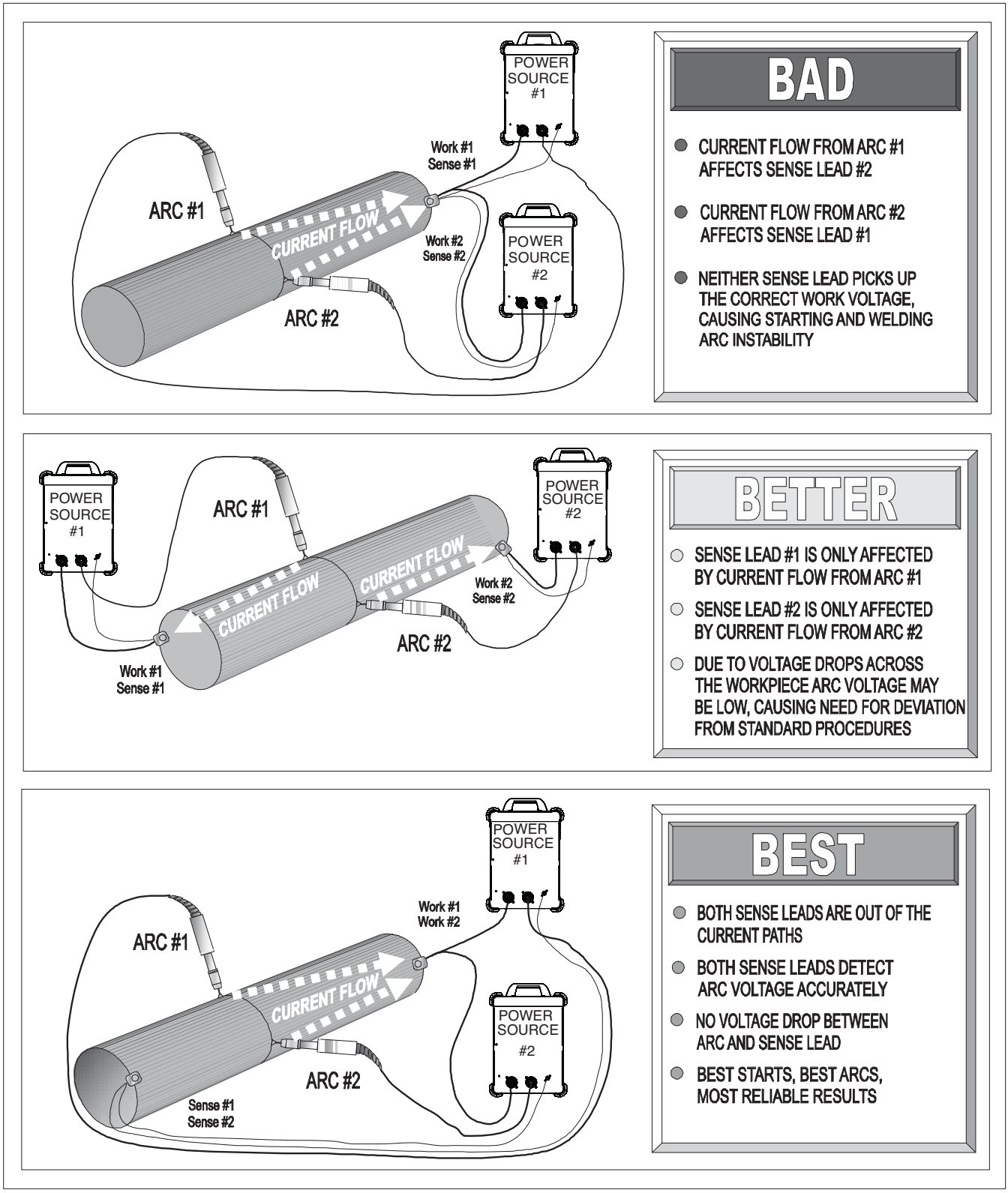

CONTROL CABLE CONNECTIONS

General Guidelines

Genuine Lincoln control cables should be used at all times (except where noted otherwise). Lincoln cables are specifically designed for the communication and power needs of the Power Wave® / Power Feed™ systems. Most are designed to be connected end to end for ease of extension. Generally, it is recommended that the total length not exceed 100ft. (30.5m). The use of non-standard cables, especially in lengths greater than 25 feet, can lead to communication problems (system shutdowns), poor motor acceleration (poor arc starting), and low wire driving force (wire feeding problems). Always use the shortest length of control cable possible, and **DO NOT coil excess cable**.

Regarding cable placement, best results will be obtained when control cables are routed separate from the weld cables. This minimizes the possibility of interference between the high currents flowing through the weld cables, and the low level signals in the control cables. These recommendations apply to all communication cables including ArcLink® and Ethernet connections.

Product specific Installation Instructions

Connection Between Power Source and ArcLink® Compatible Wirefeeders (K1543, K2683 – ArcLink Control Cable)

The 5-pin ArcLink control cable connects the power source to the wire feeder. The control cable consists of two power leads, one twisted pair for digital communication, and one lead for voltage sensing. The 5-pin ArcLink connection on the POWER WAVE® S500CE is located on the rear panel (See Case Back Controls in the **Operation Section**). The control cable is keyed and polarized to prevent improper connection. Best results will be obtained when control cables are routed separate from the weld cables, especially in long distance applications. The recommended combined length of the ArcLink control cable network should not exceed 200ft. (61.0m).

Connection Between Power Source and Ethernet Networks

The POWER WAVE® S500CE is equipped with an IP67 rated ODVA compliant RJ-45 Ethernet connector, which is located on the rear panel. All external Ethernet equipment (cables, switches, etc.), as defined by the connection diagrams, must be supplied by the customer. It is critical that all Ethernet cables external to either a conduit or an enclosure are solid conductor, shielded cat 5e cable, with a drain. The drain should be grounded at the source of transmission. For best results, route Ethernet cables away from weld cables, wire drive control cables, or any other current carrying device that can create a fluctuating magnetic field. For additional guidelines refer to ISO/IEC 11801. Failure to follow these recommendations can result in an Ethernet connection failure during welding.

SAFETY PRECAUTIONS

READ AND UNDERSTAND ENTIRE SECTION BEFORE OPERATING MACHINE.

⚠ WARNING

- **ELECTRIC SHOCK CAN KILL.**
- **Do not touch electrically live part or electrode with skin or wet clothing.**
- **Insulate yourself from work and ground.**
- **Always wear dry insulating gloves.**
- **Do not operate with covers, panels or guards removed or open.**

- **FUMES AND GASSES can be dangerous.**
- **Keep your head out of fumes.**
- **Use ventilation or exhaust to remove fumes from breathing zone.**

- **WELDING SPARKS can cause fire or explosion.**
- **Keep flammable material away.**

ARC RAYS can burn.

- **Wear eye, ear and body protection.**

SEE ADDITIONAL WARNING INFORMATION UNDER ARC WELDING SAFETY PRECAUTIONS AND IN THE FRONT OF THIS OPERATING MANUAL.

POWER-UP SEQUENCE

When the POWER WAVE® S500CE is powered up, it can take as long as 30 seconds for the machine to be ready to weld. During this time period the user interface will not be active.

DUTY CYCLE

The duty cycle is based on a ten-minute period. A 40% duty cycle represents 4 minutes of welding and 6 minutes of idling in a ten-minute period. Refer to the technical specification section for the POWER WAVE® S500CE's duty cycle ratings.

GRAPHIC SYMBOLS THAT APPEAR ON THIS MACHINE OR IN THIS MANUAL

WARNING OR CAUTION

DANGEROUS VOLTAGE

POSITIVE OUTPUT

NEGATIVE OUTPUT

HIGH TEMPERATURE

STATUS

PROTECTIVE GROUND

COOLER

OUTPUT

OPERATORS MANUAL

WORK

CIRCUIT BREAKER

EXPLOSION

PRODUCT DESCRIPTION

PRODUCT SUMMARY

The POWER WAVE® S500CE is a portable multi-process power source with high-end functionality capable of Stick, DC TIG, MIG, Pulsed MIG and Flux-Cored welding. It is ideal for a wide variety of materials including aluminum, stainless, and nickel — where arc performance is critical.

The POWER WAVE® S500CE is designed to be a very flexible welding system. Like existing Power Wave's®, the software based architecture allows for future upgradeability. One significant change from the current range of Power Wave® units is that the Ethernet communication feature is standard on the POWER WAVE® S500CE which allows for effortless software upgrades through Powerwavesoftware.com. The Ethernet communication also gives the POWER WAVE® S500CE the ability to run Production Monitoring™ 2. A Devicenet option will allow the POWER WAVE® S500CE to be used in a wide range of configurations and the POWER WAVE® S500CE is being designed to be compatible with future advanced welding modules like STT

RECOMMENDED PROCESSES AND EQUIPMENT

The POWER WAVE® S500CE is recommended for semiautomatic welding, and may also be suitable for basic hard automation applications. The POWER WAVE® S500CE can be set up in a number of configurations, some requiring optional equipment or welding programs.

RECOMMENDED EQUIPMENT

The POWER WAVE® S500CE is designed to be compatible with the current range of Power Feed™ systems including future versions of ArcLink® feeders.

RECOMMENDED PROCESSES

The POWER WAVE® S500CE is a high speed, multi-process power source capable of regulating the current, voltage, or power of the welding arc. With an output range of 5 to 550 amperes, it supports a number of standard processes including synergic GMAW, GMAW-P, FCAW, FCAW-SS, SMAW, GTAW and GTAW-P on various materials especially steel, aluminum and stainless.

PROCESS LIMITATIONS

The software based weld tables of the POWER WAVE® S500CE limit the process capability within the output range and the safe limits of the machine. In general the processes will be limited to .030-.052 solid steel wire, .030 -.045 stainless wire, .035 -1/16 cored wire, and .035 - 1/16 Aluminum wire.

EQUIPMENT LIMITATIONS

Only ArcLink compatible semiautomatic wire feeders and users interfaces may be used. If other Lincoln wire feeders or non-Lincoln wire feeders are used there will be limited process capability and performance and features will be limited.

DESIGN FEATURES

Loaded with Standard Features

- Multiple process DC output range: 5 - 550 Amps.
- 200 – 600 VAC, 3 phase, 50-60Hz input power.
- New and Improved Line Voltage Compensation holds the output constant over wide input voltage fluctuations.
- Utilizes next generation microprocessor control, based on the ArcLink® platform.
- State of the art power electronics technology yields superior welding capability.
- Electronic over current protection.
- Input over voltage protection.
- F.A.N. (fan as needed). Cooling fan only runs when needed.
- Thermostatically protected for safety and reliability.
- Recessed connection panel for protection against accidental impact.
- Ethernet connectivity via ODVA compliant RJ-45 connector.
- Panel mounted Status and Thermal LED indicators facilitate quick and easy troubleshooting.
- Potted PC boards for enhanced ruggedness/reliability.
- Enclosure reinforced with heavy duty aluminum extrusions for mechanical toughness.
- Waveform Control Technology™ for good weld appearance and low spatter, even when welding nickel alloys.
- Compatible with stackable STT® and Water Cooled Modules upgrades.
- Devicenet relay.

CASE FRONT CONTROLS

(See Figure B.1)

1. **USER INTERFACE (OPTIONAL)**
2. **STATUS LED -** (See Troubleshooting Section for operational functions)
3. **THERMAL LED -** Indicates when machine has thermal fault.
4. **POWER SWITCH -** Controls power to the POWER WAVE® S500CE.
5. **WORK STUD**
6. **ELECTRODE STUD**
7. **WORK SENSE LEAD**
8. **ARCLINK RECEPTACLE**
9. **12-PIN REMOTE (OPTIONAL)**
10. **GAS OUTLET**

FIGURE B.1

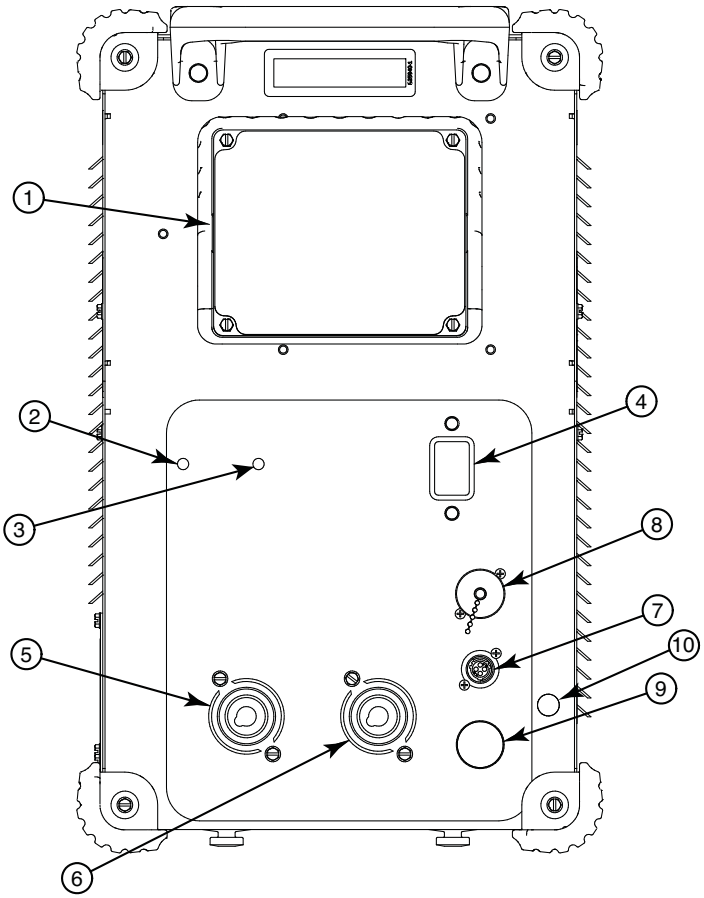

CASE BACK CONTROLS

(See Figure B.2)

1. ETHERNET
2. GAS INLET (OPTIONAL)
3. RESERVED FOR FUTURE DEVELOPMENT
4. SYNC TANDEM (OPTIONAL)
5. REAR ARCLINK (OPTIONAL)
6. DEVICENET (OPTIONAL)
7. COOLER OUTPUT POWER PANEL (OPTIONAL)
8. INPUT POWER CORD
9. CIRCUIT BREAKER

FIGURE B.2

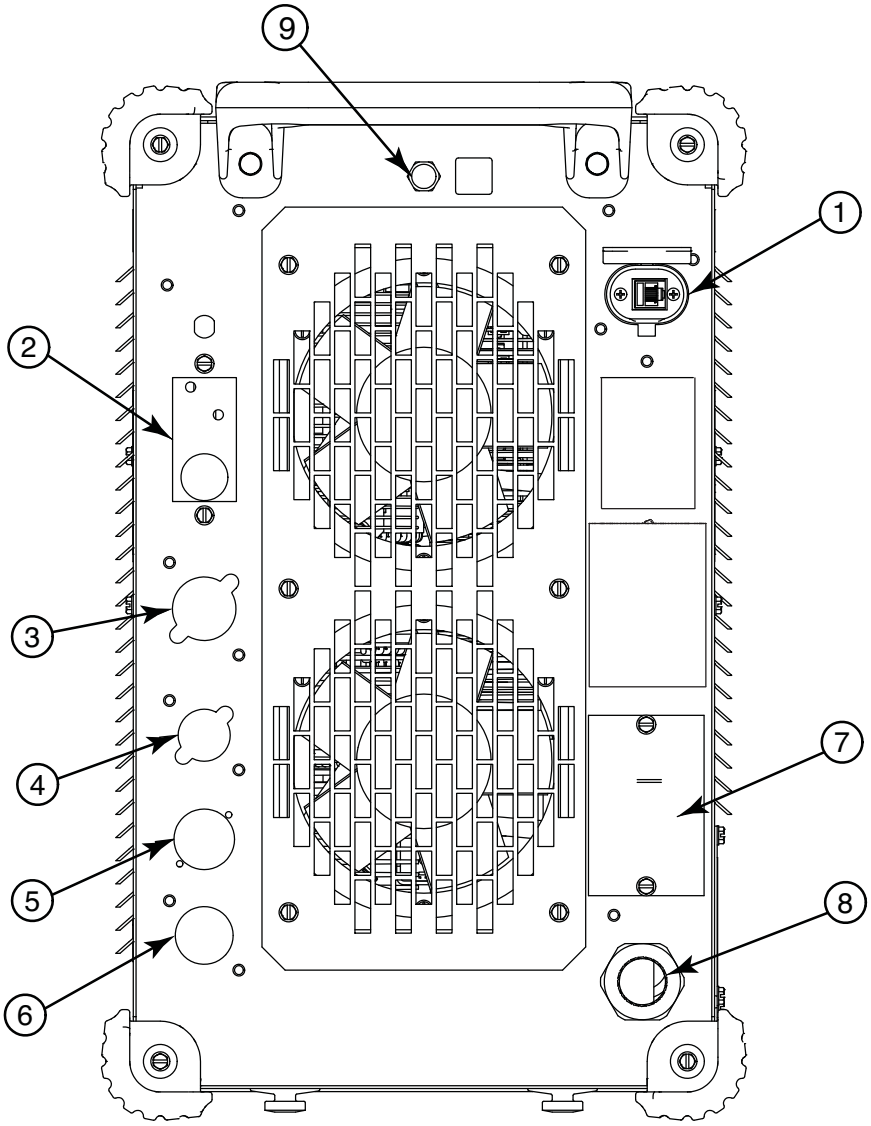

COMMON WELDING PROCEDURES

⚠ WARNING

MAKING A WELD

The serviceability of a product or structure utilizing the welding programs is and must be the sole responsibility of the builder/user. Many variables beyond the control of The Lincoln Electric Company affect the results obtained in applying these programs. These variables include, but are not limited to, welding procedure, plate chemistry and temperature, weldment design, fabrication methods and service requirements. The available range of a welding program may not be suitable for all applications, and the build/user is and must be solely responsible for welding program selection.

Choose the electrode material, electrode size, shielding gas, and process (GMAW, GMAW-P etc.) appropriate for the material to be welded.

Select the weld mode that best matches the desired welding process. The standard weld set shipped with the POWER WAVE® S500CE encompasses a wide range of common processes that will meet most needs. If a special weld mode is desired, contact the local Lincoln Electric sales representative.

All adjustments are made through the user interface. Because of the different configuration options your system may not have all of the following adjustments. See Accessories Section for Kits and Options avaliable to use with the POWER WAVE® S500CE.

DEFINITION OF WELDING MODES

NON-SYNERGIC WELDING MODES

- A **Non-synergic** welding mode requires all welding process variables to be set by the operator.

SYNERGIC WELDING MODES

- A **Synergic** welding mode offers the simplicity of single knob control. The machine will select the correct voltage and amperage based on the Wire Feed Speed (WFS) set by the operator.

BASIC WELDING CONTROLS

Weld Mode

Selecting a weld mode determines the output characteristics of the Power Wave® power source. Weld modes are developed with a specific electrode material, electrode size, and shielding gas. For a more complete description of the weld modes programmed into the POWER WAVE® S500CE at the factory, refer to the Weld Set Reference Guide supplied with the machine or available at:

(www.powerwavesoftware.com)

Wire Feed Speed (WFS)

In synergic welding modes (synergic CV, GMAW-P), WFS is the dominant control parameter. The user adjusts WFS according to factors such as wire size, penetration requirements, heat input, etc. The POWER WAVE® S500CE then uses the WFS setting to adjust the voltage and current according to settings contained in the POWER WAVE®.

In non-synergic modes, the WFS control behaves like a conventional power source where WFS and voltage are independent adjustments. Therefore, to maintain proper arc characteristics, the operator must adjust the voltage to compensate for any changes made to the WFS.

Amps

In constant current modes, this control adjusts the welding amperage.

Volts

In constant voltage modes, this control adjusts the welding voltage.

Trim

In pulse synergic welding modes, the Trim setting adjusts the arc length. Trim is adjustable from 0.50 to 1.50. 1.00 is the nominal setting and is a good starting point for most conditions.

UltimArc™ Control

UltimArc™ Control allows the operator to vary the arc characteristics. UltimArc™ Control is adjustable from –10.0 to +10.0 with a nominal setting of 0.0.

SMAW (STICK) WELDING

The welding current and Arc Force settings can be set through a Power Feed™ 10M or Power Feed™ 25M wire feeder. Alternatively an optional Stick / TIG UI can be installed into the power source to control these settings locally.

In a **SMAW** (STICK mode), Arc Force can be adjusted. It can be set to the lower range for a soft and less penetrating arc characteristic (negative numeric values) or to the higher range (positive numeric values) for a crisp and more penetrating arc. Normally, when welding with cellulosic types of electrodes (E6010, E7010, E6011), a higher energy arc is required to maintain arc stability. This is usually indicated when the electrode sticks to the work-piece or when the arc becomes unstable during manipulative technique. For low hydrogen types of electrodes (E7018, E8018, E9018, etc.) a softer arc is usually desirable and the lower end of the Arc Control suits these types of electrodes. In either case the arc control is available to increase or decrease the energy level delivered to the arc.

GTAW (TIG) WELDING

The welding current can be set through a Power Feed® 10M, LF45 or Power Feed® 25M wire feeder. Alternatively an optional Stick / TIG UI (K2828-1) can be installed into the power source to control these settings locally.

The **TIG** mode features continuous control from 5 to 550 amps with the use of an optional foot amptrol. The POWER WAVE® S500CE can be run in either a Touch Start TIG mode or Scratch start TIG mode.

CONSTANT VOLTAGE WELDING

Synergic CV

For each wire feed speed, a corresponding voltage is preprogrammed into the machine through special software at the factory.

The nominal preprogrammed voltage is the best average voltage for a given wire feed speed, but may be adjusted to preference. When the wire feed speed changes, the POWER WAVE® S500CE automatically adjusts the voltage level correspondingly to maintain similar arc characteristics throughout the WFS range.

Non Synergic CV

In non-synergic modes, the WFS control behaves more like a conventional CV power source where WFS and voltage are independent adjustments. Therefore to maintain the arc characteristics, the operator must adjust the voltage to compensate for any changes made to the WFS.

All CV Modes

Pinch adjusts the apparent inductance of the wave shape. The “pinch” function is inversely proportional to inductance. Therefore, increasing Pinch Control greater than 0.0 results in a crisper arc (more spatter) while decreasing the Pinch Control to less than 0.0 provides a softer arc (less spatter).

PULSE WELDING

Pulse welding procedures are set by controlling an overall “arc length” variable. When pulse welding, the arc voltage is highly dependent upon the waveform. The peak current, back ground current, rise time, fall time and pulse frequency all affect the voltage. The exact voltage for a given wire feed speed can only be predicted when all the pulsing waveform parameters are known. Voltage or Trim can be adjusted.

Trim adjusts the arc length and ranges from 0.50 to 1.50 with a nominal value of 1.00. Trim values greater than 1.00 increase the arc length, while values less than 1.00 decrease the arc length. (See figure B.3)

FIGURE B.3

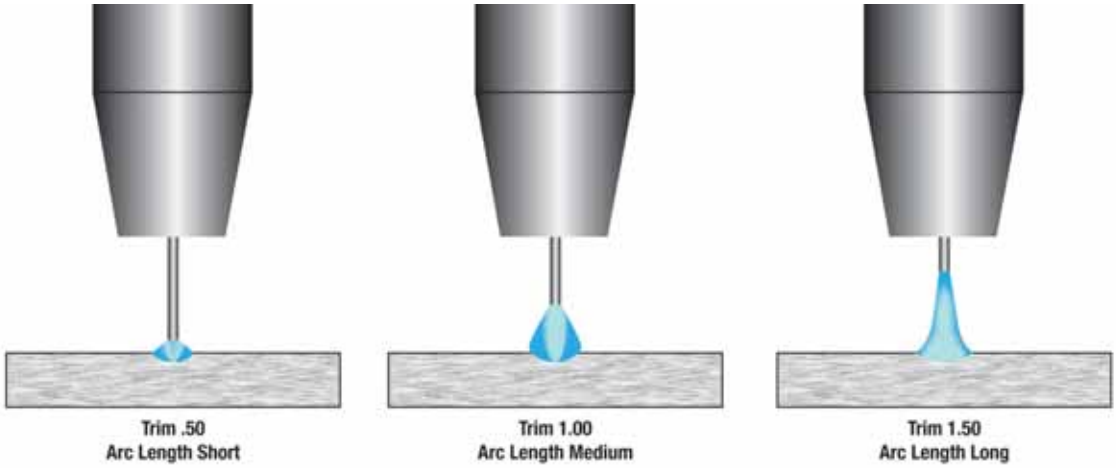

Most pulse welding programs are synergic. As the wire feed speed is adjusted, the POWER WAVE® S500CE will automatically recalculate the waveform parameters to maintain similar arc properties.

The POWER WAVE® S500CE utilizes “adaptive control” to compensate for changes in the electrical stick-out while welding. (Electrical stick-out is the distance from the contact tip to the work piece.) The POWER WAVE® S500CE waveforms are optimized for a 0.75” stick-out. The adaptive behavior supports a range of stick-outs from 0.50 to 1.25”. At very low or high wire feed speeds, the adaptive range may be less due to reaching physical limitations of the welding process.

UltimArc™ Control adjusts the focus or shape of the arc. UltimArc™ Control is adjustable from -10.0 to +10.0 with a nominal setting of 0.0. Increasing the UltimArc™ Control increases the pulse frequency and background current while decreasing the peak current. This results in a tight, stiff arc used for high speed sheet metal welding. Decreasing the UltimArc™ Control decreases the pulse frequency and background current while increasing the peak current. This results in a soft arc good for out of position welding. (See Figure B.4)

FIGURE B.4

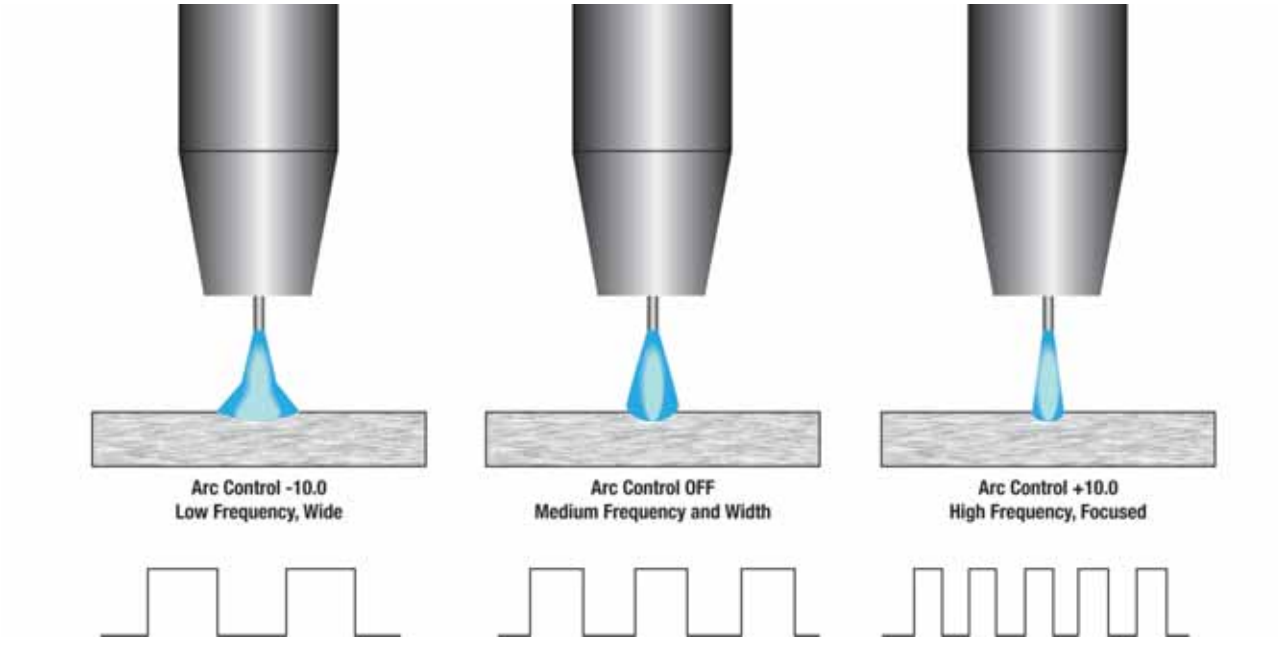

KITS, OPTIONS AND ACCESSORIES

All Kits Options and Accessories are found on the Web site: (**www.lincolnelectric.com)**

FACTORY INSTALLED

None Available

FIELD INSTALLED OPTIONS

GENERAL OPTIONS

DeviceNet Kit
Mounts inside the back of the POWER WAVE® S500CE. Allows Devicenet objects to communicate with the POWER WAVE® S500CE.
Order K2827-1

Work Voltage Sense Lead Kit
Required to accurately monitor voltage at the arc.
Order K940-XX Series
Order K1811-XX Series

Deluxe Adjustable Gas Regulator & Hose Kit
Accommodates CO_2, Argon, or Argon-blend gas cylinders. Includes a cylinder pressure gauge, dual scale flow gauge and 4.3 ft. (1.3 m) gas hose.
Order K586-1

Work and Wire Feeder 2/0 Weld Cable Package
Includes Twist-Mate™ connectors, work clamps, 15 ft. (4.5 m) work cable and 10 ft. (3.0 m) electrode cable. Rated 350 amps, 60% duty cycle.
Order K1803-1

Twist-Mate™ Cable Plug
For connecting welding cable to output terminal receptacles. For 1/0-2/0 (50-70 mm^2) cable.
Order K852-70

Twist-Mate™ Cable Plug
For connecting welding cable to output terminal receptacles. For 2/0-3/0 (70-95 mm^2) cable.
Order K852-95
Twist-Mate™ Cable Receptacle
For connecting welding cable to Twist-Mate™ Cable Plug.
Order K1759-70 for 1/0-2/0 (50-70 mm2) cable
Order K1759-95 for 2/0-3/0 (70-95mm2) cable

Twist-Mate™ to Lug Adapter
For connection of lugged cable to Twist-Mate™ connectors. 18" (457 mm) long.
Order K2176-1

Dual Cylinder Kit
Permits side-by-side mounting of two full size gas cylinders, with easy loading. For use with K1764-1 cart.
Order K1702-1

Coaxial Welding Cable
Optimum weld cables for minimizing cable inductance and optimizing welding performance.
Order K1796-25 for 25 feet 25 ft. (7.6 m) cable length.
Order K1796-50 for 50 feet 50 ft. (15.2 m) cable length.
Order K1796-75 for 75 feet 75 ft. (22.9 m) cable length.
Order K1796-100 for 100 feet 100 ft. (30.5 m) cable length.

Welding Fume Extractors
Lincoln offers a wide range of fume extraction environmental system solutions, ranging from portable systems easily wheeled around a shop to shop-wide central systems servicing many dedicated welding stations.
Request Lincoln publication E13.40
(See **www.lincolnelectric.com**)

STT® MODULE

Mounts directly below the power source, to enable the advance waveform control technology of STT®.
STT® is a controlled GMAW short circuit transfer process that uses current controls to adjust the heat independent of the wire feed speed, resulting in superior arc performance, good penetration, low heat input control, reduced spatter and fumes.
Order K2921-1

COOLARC 50

This module mounts directly under the power source and enables water-cooled MIG or TIG applications. The module is powered and controlled by the power source and is equipped with a pump and fan on demand features.
Order K14050-1.

STICK OPTIONS

ACCESSORY KIT - 150 Amp

For stick welding. Includes 20 ft. (6.1m) #6 electrode cable with lug, 15 ft. (4.6m) #6 work cable with lugs, headshield, filter plate, work clamp, electrode holder and sample pack of mild steel electrode. For use with K2176-1 (Twist-Mate™ to Lug Adapter)
ORDER K875

ACCESSORY KIT - 400 AMP

For stick welding. Includes 35 ft. (10.7m) 2/0 electrode cable with lug, 30 ft. (9.1m) 2/0 work cable with lugs, headshield, filter plate, work clamp and electrode holder. For use with K2176-1 (Twist-Mate™ to Lug Adapter)
ORDER K704

REMOTE OUTPUT CONTROL

Portable current control provides the same dial range as the current control on the welder. Consists of a 6-pin Amphenol connector which plugs into the remote control Amphenol. 25 foot cable length.
ORDER K857
ORDER K857-1 for 100 ft. (30 m)

STICK ELECTRODE HOLDER AND CABLE ASSEMBLY
Includes 200A stick electrode holder and Twist-Mate connector. 12.5 ft. cable length.
ORDER K2374-1

STICK ELECTRODE HOLDER CABLE AND WORK CABLE ASSEMBLY
Includes 200A stick electrode holder, welding cable, work clamp and Twist-Mate adapter.
ORDER K2394-1

TIG OPTIONS

Pro-Torch™ TIG Torches
A full line of air-cooled and water-cooled torches available.
Request Lincoln publication E12.150
(See **www.lincolnelectric.com**)

Hand Amptrol®

Provides 25 ft. (7.6 m) of remote current control for TIG welding. (6-pin plug connection)
Order K963-3

Foot Amptrol®

Provides 25 ft. (7.6 m) of remote current control for TIG welding. (6-pin plug connection).
Order K870

Arc Start Switch

May be used in place of the Foot or Hand Amptrol®. Comes with a 25 ft. (7.6 m) cable. Attaches to the TIG torch for convenient finger control to start and stop the weld cycle at the current set on the machine.
Order K814

6-Pin to 12-Pin Adapter for Remote Applications.
Order K2909-1

7-Pin to 12-Pin Adapter for Spool Gun Applications.
Order K2910-1

MIG OPTIONS

Work and Feeder Welding Cables
350 amps, 60% duty cycle with Twist-Mate connectors and Ground Clamp.
Order K1803-1

COMPATIBLE LINCOLN EQUIPMENT

Any Arclink compatible wire feeding equipment
(See **www.lincolnelectric.com**)

SAFETY PRECAUTIONS

⚠ WARNING

ELECTRIC SHOCK can kill.

- **Do not operate with covers removed.**
- **Turn off power source before installing or servicing.**
- **Do not touch electrically hot parts.**
- **Turn the input power to the welding power source off at the fuse box before working in the terminal strip.**
- **Only qualified personnel should install, use or service this equipment.**

ROUTINE MAINTENANCE

Routine maintenance consists of periodically blowing out the machine, using a low-pressure air stream, to remove accumulated dust and dirt from the intake and outlet louvers, and the cooling channels in the machine.

PERIODIC MAINTENANCE

Calibration of the POWER WAVE® S500CE is critical to its operation. Generally speaking the calibration will not need adjustment. However, neglected or improperly calibrated machines may not yield satisfactory weld performance. To ensure optimal performance, the calibration of output Voltage and Current should be checked yearly.

CALIBRATION SPECIFICATION

Output Voltage and Current are calibrated at the factory. Generally the machine calibration will not need adjustment. However, if the weld performance changes, or the yearly calibration check reveals a problem, use the calibration section of the **Diagnostics Utility** to make the appropriate adjustments.

The calibration procedure itself requires the use of a grid, and certified actual meters for voltage and current. The accuracy of the calibration will be directly affected by the accuracy of the measuring equipment you use. The **Diagnostics Utility** includes detailed instructions, and is available on the **Service Navigator CD** or at **www.powerwavesoftware.com**.

HOW TO USE TROUBLESHOOTING GUIDE

⚠ WARNING

Service and Repair should only be performed by Lincoln Electric Factory Trained Personnel. Unauthorized repairs performed on this equipment may result in danger to the technician and machine operator and will invalidate your factory warranty. For your safety and to avoid Electrical Shock, please observe all safety notes and precautions detailed throughout this manual.

This Troubleshooting Guide is provided to help you locate and repair possible machine malfunctions. Simply follow the three-step procedure listed below.

Step 1. LOCATE PROBLEM (SYMPTOM).
Look under the column labeled “PROBLEM (SYMPTOMS)”. This column describes possible symptoms that the machine may exhibit. Find the listing that best describes the symptom that the machine is exhibiting.

Step 2. POSSIBLE CAUSE.
The second column labeled “POSSIBLE CAUSE” lists the obvious external possibilities that may contribute to the machine symptom.

Step 3. RECOMMENDED COURSE OF ACTION
This column provides a course of action for the Possible Cause, generally it states to contact your local Lincoln Authorized Field Service Facility.

If you do not understand or are unable to perform the Recommended Course of Action safely, contact your local Lincoln Authorized Field Service Facility.

⚠ WARNING

ELECTRIC SHOCK can kill.

- **Turn the input power OFF at the welding power source before installation or changing drive rolls and/or guides.**
- **Do not touch electrically live parts.**
- **When inching with the gun trigger, electrode and drive mechanism are "hot" to work and ground and could remain energized several seconds after the gun trigger is released.**
- **Welding power source must be connected to system ground per the National Electrical Code or any applicable local codes.**
- **Only qualified personnel should perform maintenance work.**

Observe all additional Safety Guidelines detailed throughout this manual.

⚠ CAUTION

If for any reason you do not understand the test procedures or are unable to perform the tests/repairs safely, contact your **Local Lincoln Authorized Field Service Facility** for technical troubleshooting assistance before you proceed.

USING THE STATUS LED TO TROUBLESHOOT SYSTEM PROBLEMS

Not all of the POWER WAVE® S500CE errors will be displayed on the user interface (if it is installed). There are two status lights that display error codes. If a problem occurs it is important to note the condition of the status lights. **Therefore, prior to cycling power to the system, check the power source status light for error sequences as noted below.**

There is one externally mounted status light located on the case front of the machine. This status light corresponds to the main control board and input control board's status.

Included in this section is information about the Status Lights and some basic troubleshooting charts for both machine and weld performance.

The status light for the main control board and input control board are dual-color LED's. Normal operation for each is steady green.

Error conditions are indicated in the following chart Table E.1.

TABLE E.1

Light Condition	Meaning Main control board status light and Input control board
Steady Green	System OK. Power source is operational, and is communicating normally with all healthy peripheral equipment connected to its ArcLink network.
Blinking Green	Occurs during power up or a system reset, and indicates the POWER WAVE® S500CE is mapping (identifying) each component in the system. Normal for first 1-10 seconds after power is turned on, or if the system configuration is changed during operation.
Fast Blinking Green	Indicates Auto-mapping has failed
Alternating Green and Red	Non-recoverable system fault. If the Status lights are flashing any combination of red and green, errors are present. **Read the error code(s) before the machine is turned off.**
	Error Code interpretation through the Status light is detailed in the Service Manual. Individual code digits are flashed in red with a long pause between digits. If more than one code is present, the codes will be separated by a green light. Only active error conditions will be accessible through the Status Light.
	Error codes can also be retrieved with the **Power Wave Manager Utility** available at **www.powerwavesoftware.com**). This is the preferred method, since it can access historical information contained in the error logs.
	To clear the active error(s), turn power source off, and back on to reset.
Steady Red	Not applicable.
Blinking Red	Not applicable.
Status LED off	Not applicable.

⚠ CAUTION

If for any reason you do not understand the test procedures or are unable to perform the tests/repairs safely, contact your **Local Lincoln Authorized Field Service Facility** for technical troubleshooting assistance before you proceed.

Observe all Safety Guidelines detailed throughout this manual

ERROR CODES FOR THE POWER WAVE® S500CE

The following is a partial list of possible error codes for the POWER WAVE® S500CE. For a complete listing consult the Service Manual for this machine.

MAIN CONTROL BOARD ("STATUS" LIGHT)	
Error Code #	**Indication**
36 Thermal error	Indicates over temperature. Usually accompanied by Thermal LED. Check fan operation. Be sure process does not exceed duty cycle limit of the machine
54 Secondary (Output) over current error	The long term average secondary (weld) current limit has been exceeded. **NOTE:** The long term average secondary current limit is 325A (1 Phase) or 575A (3 Phase).
56 Chopper communication error	Indicates communication link between main control board and chopper has errors. If cycling the input power on the machine does not clear the error, contact the Service Department.
58 Primary Fault error	Review error code from input board status light or status beeper. Most likely caused by an over power condition which caused an under voltage on the primary bus. If cycling the input power on the machine does not clear the error, contact the Service Department.
71 Secondary (Output) over power error	The long term secondary (Weld) power limit has been exceeded. NOTE: The long term average secondary current limit is 25kw (3 Phase), 14kw (1 Phase).
Other	Error codes that contain three or four digits are defined as fatal errors. These codes generally indicate internal errors on the Power Source Control Board. If cycling the input power on the machine does not clear the error, contact the Service Department.

⚠ CAUTION

If for any reason you do not understand the test procedures or are unable to perform the tests/repairs safely, contact your **Local Lincoln Authorized Field Service Facility** for technical troubleshooting assistance before you proceed.

Observe all Safety Guidelines detailed throughout this manual

INPUT CONTROL BOARD

Error Code #	Indication	Type
331 Instantaneous Input Current Limit	Instantaneous input current limit has been exceeded. Typically indicates short term power overload. If problem persists contact Service Department.	Persistent
334 Startup Current Check Failure	Input current limit was exceeded during machine power-up. If problem persists contact Service Department.	Persistent
335 Startup Voltage Check Failure	Input voltage was too high or too low during machine power-up. Verify that the input voltage is between 200V and 650V.	Temporary
336 Thermal Fault	Thermostat on primary module tripped. Typically caused by a fan malfunction or blocked air vent.	Temporary
337 Precharge Timeout	The DC bus voltage was not charged to a certain level at end of precharge. If problem persists contact Service Department.	Persistent
338 Input Power Limit	The input power drawn by the machine exceeded a safe level. If problem persists, contact the Service Department.	Persistent
341 Input Voltage Dropout	The input voltage momentarily dropped out. Check connections and verify quality of input power.	Temporary
346 Transformer Primary Overcurrent	Transformer current too high. Typically indicates short-term power overload. If problem persists, contact the Serivce Department.	Persistent
347 Average Input Current Limit	Average input current limit has been exceeded. Typically indicates short term power overload. If problem persists contact Service Department.	Persistent
349 Bus Undervoltage	The DC bus voltage dropped below the allowable limit. If problem persists, contact the Service Department.	Temporary

Persistent errors require power to be cycled for the error to clear.
Temporary faults will go away on their own if the error condition is removed.

⚠ CAUTION

If for any reason you do not understand the test procedures or are unable to perform the tests/repairs safely, contact your **Local Lincoln Authorized Field Service Facility** for technical troubleshooting assistance before you proceed.

Observe all Safety Guidelines detailed throughout this manual

PROBLEMS (SYMPTOMS)	POSSIBLE CAUSE	RECOMMENDED COURSE OF ACTION
Basic Machine Problems		
Input fuses keep blowing	1. Improperly sized input fuses.	1. Make sure fuses are properly sized. See installation section of this manual for recommended sizes.
	2. Improper Weld Procedure requiring output levels in excess of machine rating.	2. Reduce output current, duty cycle, or both.
	3. Major physical or electrical damage is evident when the covers are removed.	3. Contact your local authorized Lincoln Electric Field Service facility for technical assistance.
Machine will not power up (no lights)	1. No Input Power	1. Make sure input supply disconnect has been turned ON. Check input fuses. Make certain that the Power Switch (SW1) on the power source is in the “ON” position.
	2. Input voltage is too low or too high.	2. Make certain that input voltage is correct, according to the Rating Plate located on the rear of the machine.
Machine won’t weld, can’t get any output.	1. Input voltage is too low or too high.	1. Make certain that input voltage is correct, according to the Rating Plate located on the rear of the machine.
This problem will normally be accompanied by an error code. See “Status Light” section of this document for additional information.	2. Thermal Error.	2. See “Thermal LED is ON” section.
	3. Secondary current limit has been exceeded. (see error 54)	3. Possible short in output circuit. If condition persists, contact an authorized Lincoln Electric Field Service facility.
	3a. Input control board fault (see input control board error status).	

⚠ CAUTION

If for any reason you do not understand the test procedures or are unable to perform the tests/repairs safely, contact your **Local Lincoln Authorized Field Service Facility** for technical troubleshooting assistance before you proceed.

Observe all Safety Guidelines detailed throughout this manual

PROBLEMS (SYMPTOMS)	POSSIBLE CAUSE	RECOMMENDED COURSE OF ACTION
Basic Machine Problems (Continued)		
Thermal LED is ON	1. Improper fan operation.	1. Check for proper fan operation. Fan should run in a low speed setting when the machine is idle and in a high speed when the output is triggered. Check for material blocking intake or exhaust louvers, or for excessive dirt clogging cooling channels in machine.
	2. Open thermostat circuit.	2. Check for broken wires, open connections or faulty thermostats in the thermostat circuit.
"Real Time Clock" no longer functioning	1. Control PC Board Battery.	1. Replace the battery (Type: BS2032)
Weld and Arc Quality Problems		
General degradation of weld performance	1. Wire feed problem.	1. Check for feeding problems.
	2. Cabling problems.	2. Check for bad connections, excessive loops in cable, etc. **NOTE:** The presence of heat in the external welding circuit indicates poor connections or undersized cables.
	3. Loss of, or improper Shielding Gas.	3. Verify gas flow and type are correct.
	4. Verify weld mode is correct for process.	4.Select the correct weld mode for the application.
	5. Machine calibration.	5. The power source may require calibration. (current, voltage, WFS).

⚠ CAUTION

If for any reason you do not understand the test procedures or are unable to perform the tests/repairs safely, contact your **Local Lincoln Authorized Field Service Facility** for technical troubleshooting assistance before you proceed.

Observe all Safety Guidelines detailed throughout this manual

PROBLEMS (SYMPTOMS)	POSSIBLE CAUSE	RECOMMENDED COURSE OF ACTION
Weld and Arc Quality Problems (Continued)		
Wire burns back to tip at the end of the weld.	1. Burnback Time	1. Reduce burnback time and/or work point.
Machine output shuts down during a weld.	1. Secondary current limit has been exceeded, and the machine shuts down to protect itself.	1. Adjust procedure or reduce load to lower current draw from the machine.
	2. System Fault	2. A non-recoverable fault will interrupt welding. This condition will also result in a status light blinking. See the Status Light section for more information.
Machine won't produce full output.	1. Input voltage may be too low, limiting output capability of the power source.	1. Make certain that the input voltage is proper, according to the Rating Plate located on the rear of the machine.
	2. The input may be single phase.	2. Verify all 3 phases are present.
	3. Machine calibration.	3. Calibrate secondary current and voltage.
Excessively long and erratic arc.	1. Wire feed problem.	1. Check for feeding problems. Make sure proper gear ratio has been selected.
	2. Loss of, or improper Shielding Gas	2. Verify gas flow and type are correct
	3. Machine calibration.	3. Calibrate secondary current and voltage.

⚠ CAUTION

If for any reason you do not understand the test procedures or are unable to perform the tests/repairs safely, contact your **Local Lincoln Authorized Field Service Facility** for technical troubleshooting assistance before you proceed.

Observe all Safety Guidelines detailed throughout this manual

PROBLEMS (SYMPTOMS)	POSSIBLE CAUSE	RECOMMENDED COURSE OF ACTION
Ethernet		
Cannot Connect	1. Physical connection.	1. Verify that the correct patch cable or cross over cable is being used (refer to local IT department for assistance). 1a. Verify the cables are fully inserted into the bulk head connector. 1b. The LED under the PC board ethernet connector will be lit when the machine is connected to another network device.
	2. IP address information.	2. Use the appropriate PC utility to verify the correct IP address information has been entered. 2a. Verify no duplicate the IP addresses exist on the network.
	3. Ethernet Speed	3. Verify that the network device connected to the Power Wave is either a 10-baseT device or a 10/100-baseT device.
Connection Drops while welding	1. Cable Location	1. Verify Network cable is not located next to current carrying conductors. This would include input power cables and welding output cables.

⚠ CAUTION

If for any reason you do not understand the test procedures or are unable to perform the tests/repairs safely, contact your **Local Lincoln Authorized Field Service Facility** for technical troubleshooting assistance before you proceed.

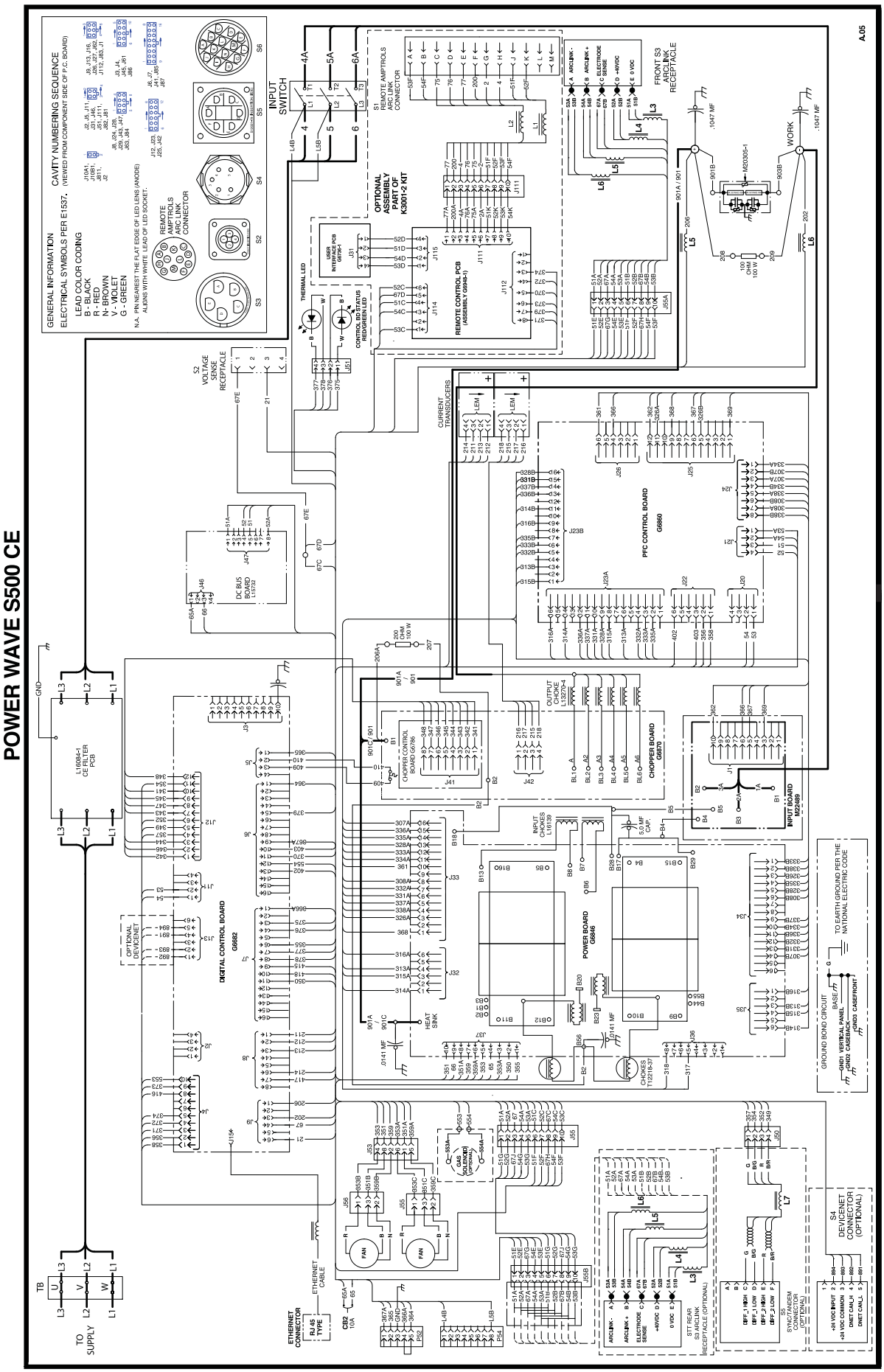

NOTE: This diagram is for reference only. It may not be accurate for all machines covered by this manual. The specific diagram for a particular code is pasted inside the machine on one of the enclosure panels. If the diagram is illegible, write to the Service Department for a replacement. Give the equipment code number.

DIMENSION PRINT

(2-12)

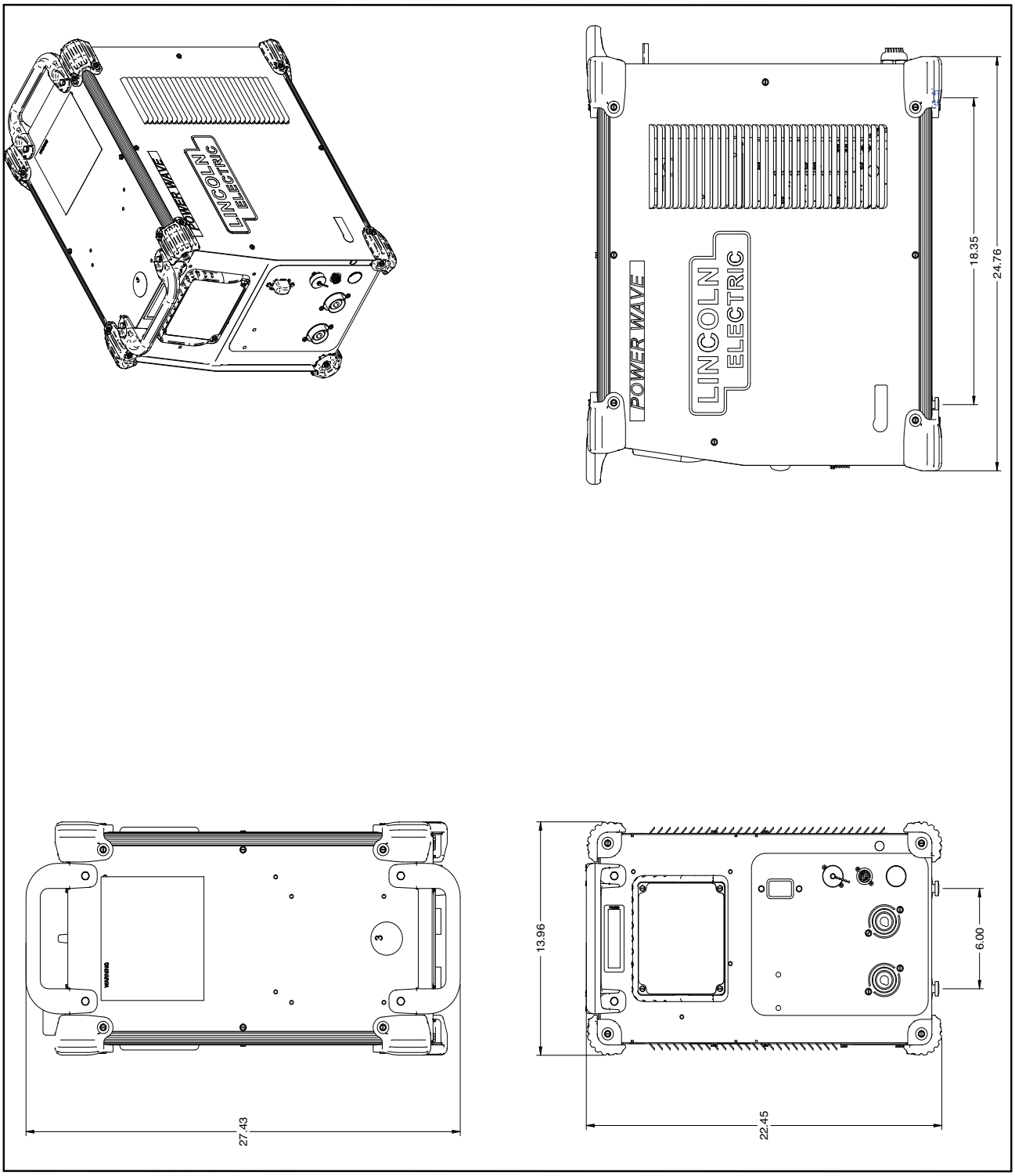

WARNING	● Do not touch electrically live parts or electrode with skin or wet clothing. ● Insulate yourself from work and ground.	● Keep flammable materials away.	● Wear eye, ear and body protection.
Spanish **AVISO DE PRECAUCION**	● No toque las partes o los electrodos bajo carga con la piel o ropa mojada. ● Aislese del trabajo y de la tierra.	● Mantenga el material combustible fuera del área de trabajo.	● Protéjase los ojos, los oídos y el cuerpo.
French **ATTENTION**	● Ne laissez ni la peau ni des vêtements mouillés entrer en contact avec des pièces sous tension. ● Isolez-vous du travail et de la terre.	● Gardez à l'écart de tout matériel inflammable.	● Protégez vos yeux, vos oreilles et votre corps.
German **WARNUNG**	● Berühren Sie keine stromführenden Teile oder Elektroden mit Ihrem Körper oder feuchter Kleidung! ● Isolieren Sie sich von den Elektroden und dem Erdboden!	● Entfernen Sie brennbarres Material!	● Tragen Sie Augen-, Ohren- und Körperschutz!
Portuguese **ATENÇÃO**	● Não toque partes elétricas e electrodos com a pele ou roupa molhada. ● Isole-se da peça e terra.	● Mantenha inflamáveis bem guardados.	● Use proteção para a vista, ouvido e corpo.
Japanese **注意事項**	● 通電中の電気部品、又は溶材にヒフやぬれた布で触れないこと。 ● 施工物やアースから身体が絶縁されている様にして下さい。	● 燃えやすいものの側での溶接作業は絶対にしてはなりません。	● 目、耳及び身体に保護具をして下さい。
Chinese **警 告**	● 皮肤或濕衣物切勿接觸帶電部件及銲條。 ● 使你自己與地面和工件絶緣。	● 把一切易燃物品移離工作場所。	● 佩戴眼、耳及身體勞動保護用具。
Korean **위 험**	● 전도체나 용접봉을 젖은 헝겁 또는 피부로 절대 접촉치 마십시요. ● 모재와 접지를 접촉치 마십시요.	● 인화성 물질을 접근 시키지 마시요.	● 눈, 귀와 몸에 보호장구를 착용하십시요.
Arabic **تحذير**	● لا تلمس الاجزاء التي يسري فيها التيار الكهربائي أو الالكترود بجلد الجسم أو بالملابس المبللة بالماء. ● ضع عازلا على جسمك خلال العمل.	● ضع المواد القابلة للاشتعال في مكان بعيد.	● ضع أدوات وملابس واقية على عينيك وأذنيك وجسمك.

READ AND UNDERSTAND THE MANUFACTURER'S INSTRUCTION FOR THIS EQUIPMENT AND THE CONSUMABLES TO BE USED AND FOLLOW YOUR EMPLOYER'S SAFETY PRACTICES.

SE RECOMIENDA LEER Y ENTENDER LAS INSTRUCCIONES DEL FABRICANTE PARA EL USO DE ESTE EQUIPO Y LOS CONSUMIBLES QUE VA A UTILIZAR, SIGA LAS MEDIDAS DE SEGURIDAD DE SU SUPERVISOR.

LISEZ ET COMPRENEZ LES INSTRUCTIONS DU FABRICANT EN CE QUI REGARDE CET EQUIPMENT ET LES PRODUITS A ETRE EMPLOYES ET SUIVEZ LES PROCEDURES DE SECURITE DE VOTRE EMPLOYEUR.

LESEN SIE UND BEFOLGEN SIE DIE BETRIEBSANLEITUNG DER ANLAGE UND DEN ELEKTRODENEINSATZ DES HERSTELLERS. DIE UNFALLVERHÜTUNGSVORSCHRIFTEN DES ARBEITGEBERS SIND EBENFALLS ZU BEACHTEN.

● Keep your head out of fumes. ● Use ventilation or exhaust to remove fumes from breathing zone.	● Turn power off before servicing.	● Do not operate with panel open or guards off.	**WARNING**
● Los humos fuera de la zona de respiración. ● Mantenga la cabeza fuera de los humos. Utilice ventilación o aspiración para gases.	● Desconectar el cable de alimentación de poder de la máquina antes de iniciar cualquier servicio.	● No operar con panel abierto o guardas quitadas.	Spanish **AVISO DE PRECAUCION**
● Gardez la tête à l'écart des fumées. ● Utilisez un ventilateur ou un aspirateur pour ôter les fumées des zones de travail.	● Débranchez le courant avant l'entretien.	● N'opérez pas avec les panneaux ouverts ou avec les dispositifs de protection enlevés.	French **ATTENTION**
● Vermeiden Sie das Einatmen von Schweibrauch! ● Sorgen Sie für gute Be- und Entlüftung des Arbeitsplatzes!	● Strom vor Wartungsarbeiten abschalten! (Netzstrom völlig öffnen; Maschine anhalten!)	● Anlage nie ohne Schutzgehäuse oder Innenschutzverkleidung in Betrieb setzen!	German **WARNUNG**
● Mantenha seu rosto da fumaça. ● Use ventilação e exhaustão para remover fumo da zona respiratória.	● Não opere com as tampas removidas. ● Desligue a corrente antes de fazer serviço. ● Não toque as partes elétricas nuas.	● Mantenha-se afastado das partes moventes. ● Não opere com os paineis abertos ou guardas removidas.	Portuguese **ATENÇÃO**
● ヒュームから頭を離すようにして下さい。 ● 換気や排煙に十分留意して下さい。	● メンテナンス・サービスに取りかかる際には、まず電源スイッチを必ず切って下さい。	● パネルやカバーを取り外したままで機械操作をしないで下さい。	Japanese **注意事項**
●頭部遠離煙霧。 ●在呼吸區使用通風或排風器除煙。	● 維修前切斷電源。	●儀表板打開或沒有安全罩時不準作業。	Chinese **警 告**
● 얼굴로부터 용접가스를 멀리하십시요. ● 호흡지역으로부터 용접가스를 제거하기 위해 가스제거기나 통풍기를 사용하십시요.	● 보수전에 전원을 차단하십시요.	● 판넬이 열린 상태로 작동치 마십시요.	Korean **위 험**
● ابعد رأسك بعيداً عن الدخان. ● استعمل التهوية أو جهاز ضغط الدخان للخارج لكي تبعد الدخان عن المنطقة التي تتنفس فيها.	● اقطع التيار الكهربائي قبل القيام بأية صيانة.	● لا تشغل هذا الجهاز اذا كانت الاغطية الحديدية الواقية ليست عليه.	Arabic **تحذير**

LEIA E COMPREENDA AS INSTRUÇÕES DO FABRICANTE PARA ESTE EQUIPAMENTO E AS PARTES DE USO, E SIGA AS PRÁTICAS DE SEGURANÇA DO EMPREGADOR.

使う機械や溶材のメーカーの指示書をよく読み、まず理解して下さい。そして貴社の安全規定に従って下さい。

請詳細閱讀並理解製造廠提供的説明以及應該使用的銀捍材料，並請遵守貴方的有関勞動保護規定。

이 제폼에 동봉된 작업지침서를 숙지하시고 귀사의 작업자 안전수칙을 준수하시기 바랍니다.

اقرأ بتمعن وافهم تعليمات المصنع المنتج لهذه المعدات والمواد قبل استعمالها واتبع تعليمات الوقاية لصاحب العمل.

Need Help?

Lincoln Electric "Rapid Response" Service!

Call 1.888.935.3877 to talk to a Service Representative

Hours of Operation: 8:00 A.M. to 6:00 P.M. (ET) Mon. thru Fri.

After hours? Use "Ask the Experts" at lincolnelectric.com

A Lincoln Service Representative will contact you by the next business day.

- For Non-U.S. Service: Email globalservice@lincolnelectric.com

Copyright © Lincoln Global Inc.

• World's Leader in Welding and Cutting Products • • Sales and Service through Subsidiaries and Distributors Worldwide •
Cleveland, Ohio 44117-1199 U.S.A. TEL: 1.216.481.8100 For Service in U.S. and Canada: Call 1.888.935.3877
FAX: 1.216.486.1751 WEB SITE: lincolnelectric.com For Non-U.S. Service: Email globalservice@lincolnelectric.com