VANTAGE 400 MACHINE SCHEMATIC G6214 REV: B

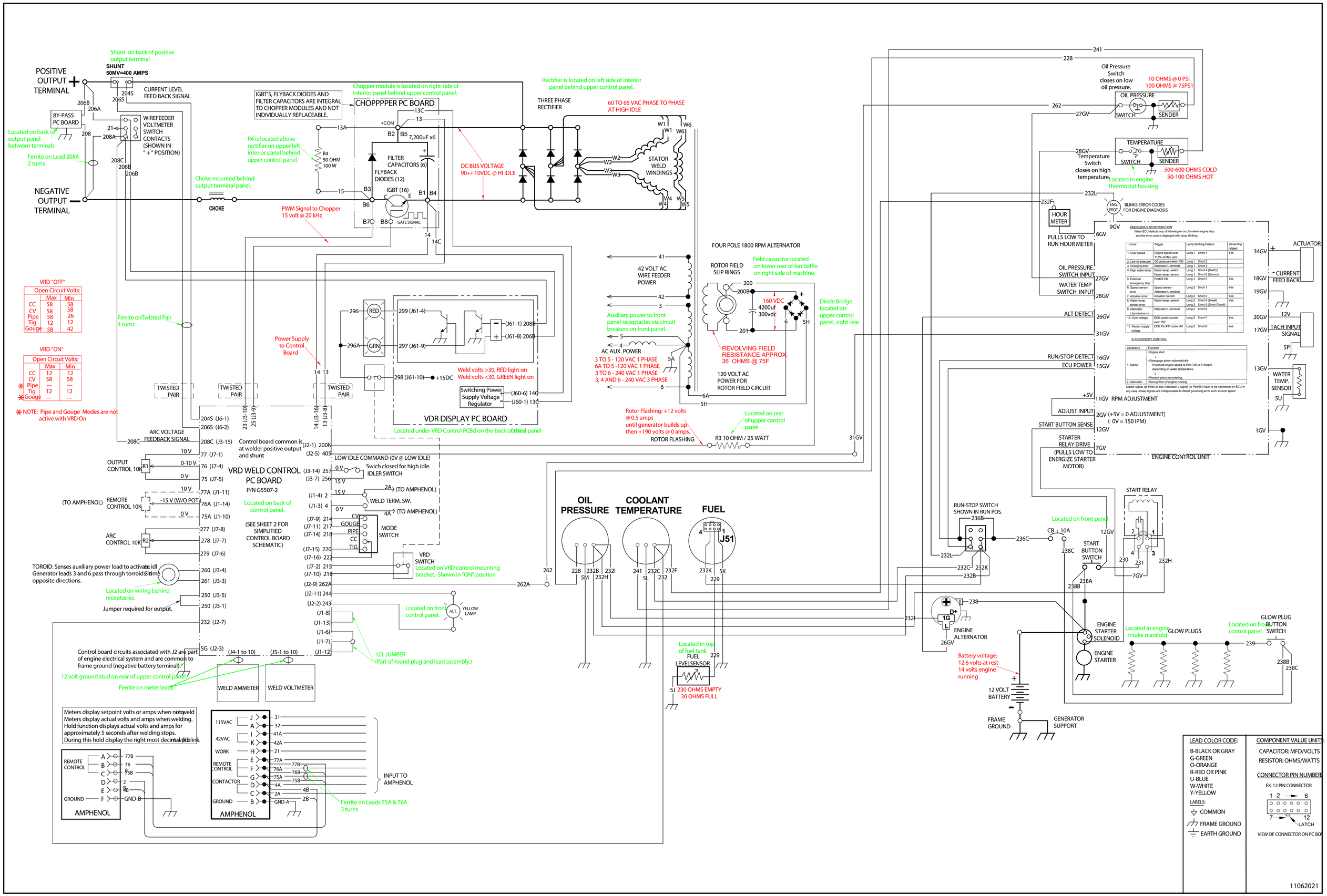

VRD "OFF"

Open Circuit Volts:	Max	Min
CC	58	58
CV	58	58
Pipe	58	26
Tig	12	12
Gouge	58	42

VRD "ON"

Open Circuit Volts:	Max	Min
CC	12	12
CV	58	58
* Pipe	---	---
Tig	12	12
* Gouge	---	---

* NOTE: Pipe and Gouge Modes are not active with VRD On

EMERGENCY STOP FUNCTION

When ECU detects any of following errors, it makes engine stop and the error code is displayed with lamp blinking.

Errors	Trigger	Lamp Blinking Pattern	Governing related
1. Over speed	Engine speed over 115% of Max. rpm	Long 1 Short 1	Yes
2. Low oil pressure	Oil pressure switch ON	Long 1 Short 2	
3. Charging error	Alternator L terminal	Long 1 Short 3	
4. High water temp.	Water temp. switch	Long 1 Short 4 (Switch)	
	Water temp. sensor	Long 1 Short 5 (Sensor)	
5. External emergency stop	Pin#29 ON	Long 1 Short 5	Yes
6. Speed sensor error	Speed sensor	Long 2 Short 1	Yes
	Alternator L terminal		
7. Actuator error	Actuator current	Long 2 Short 2	Yes
8. Water temp. sensor error	Water temp. sensor	Long 2 Short 4 (Break)	Yes
		Long 2 Short 5 (Short Circuit)	
9. Alternator L terminal error	Alternator L terminal	Long 2 Short 6	
10. Over voltage	ECU power source over 18V	Long 2 Short 7	Yes
11. Sensor supply voltage	ECU Pin #11 under 4V	Long 2 Short 8	Yes

3) ACCESSORY CONTROL

Accessory	Function
1. Starter	•Engine start •Disengage pinion automatically Threshold engine speed is from 700 to 1100rpm depending on water temperature. •Prevent pinion re-entering.
2. Alternator	•Recognition of engine running

Starter signal (to Pin#12) and Alternator L signal (to Pin#26) have to be connected to ECU in any case -these signals are indispensable to detect governing error such as over speed

VANTAGE 400 MACHINE SCHEMATIC G6214 REV: B PAGE 2
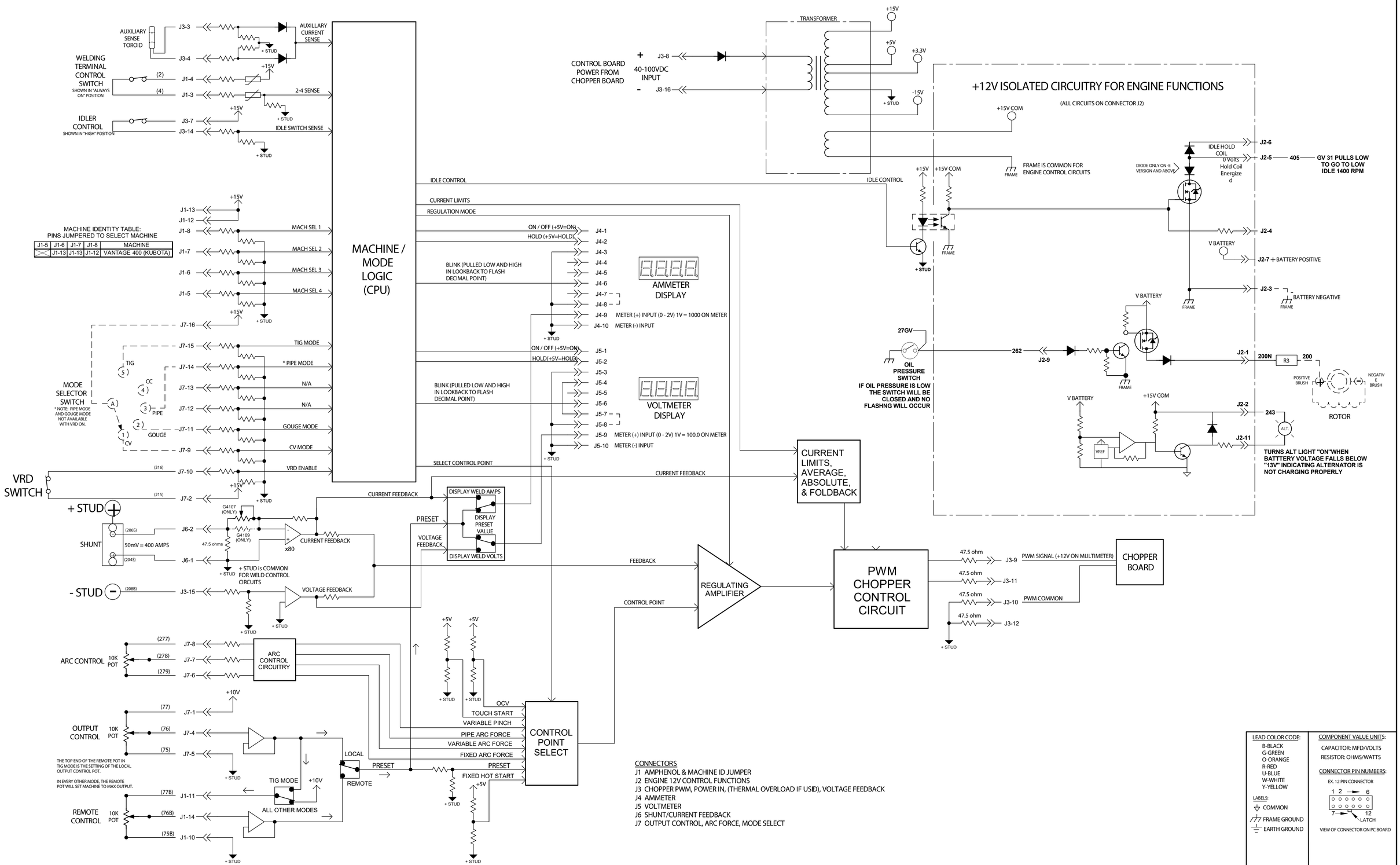
SIMPLIFIED CONTROL BOARD SCHEMATIC