AC-1500 WIRING DIAGRAM M18868-1 REV: D

NOTES:

N.C. 11K OHM RESISTOR ASSEMBLY.

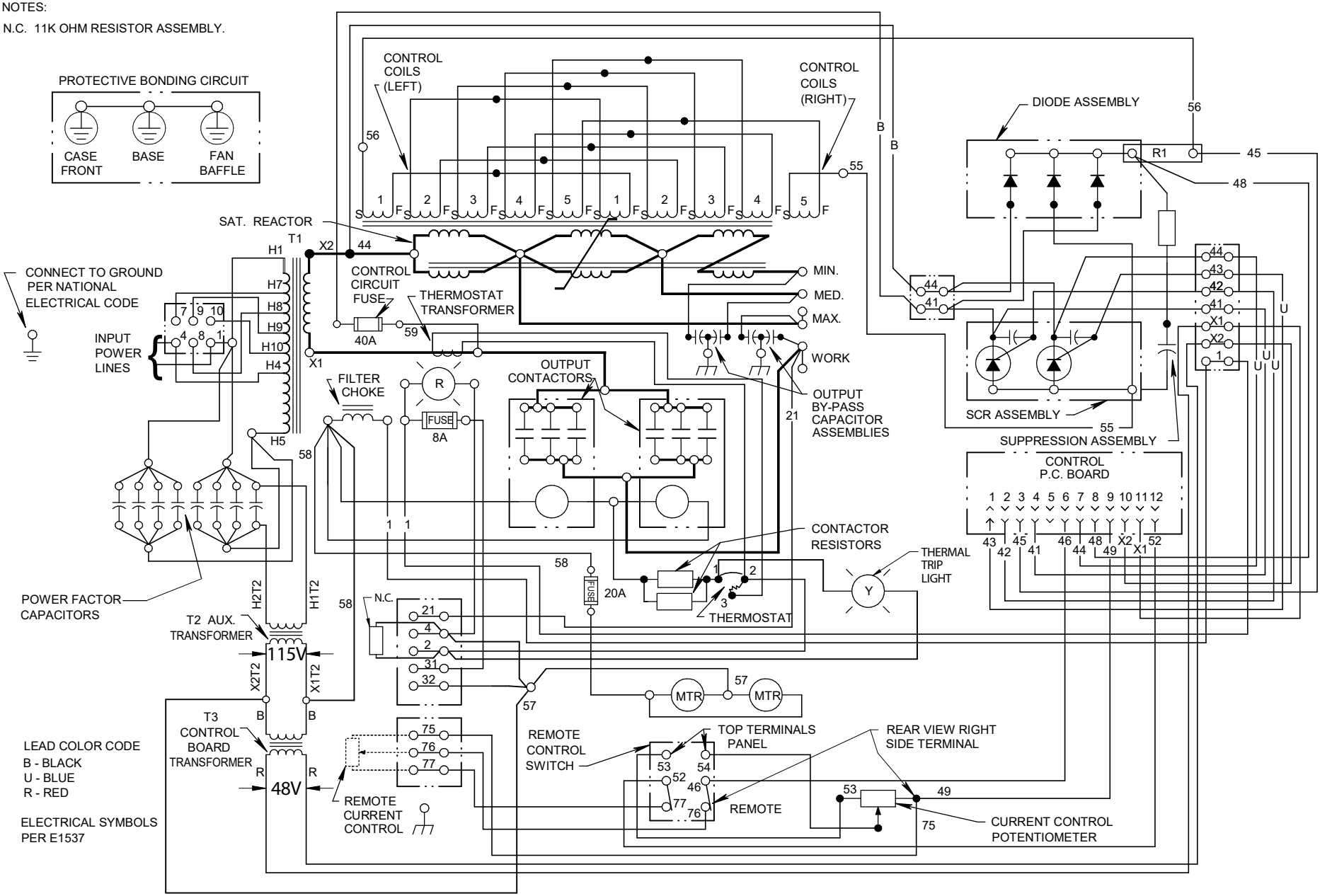

3/22

LINCOLN ELECTRIC

CLEVELAND, OHIO U.S.A.