OUTBACK 145 MACHINE SCHEMATIC S28100 REV: A

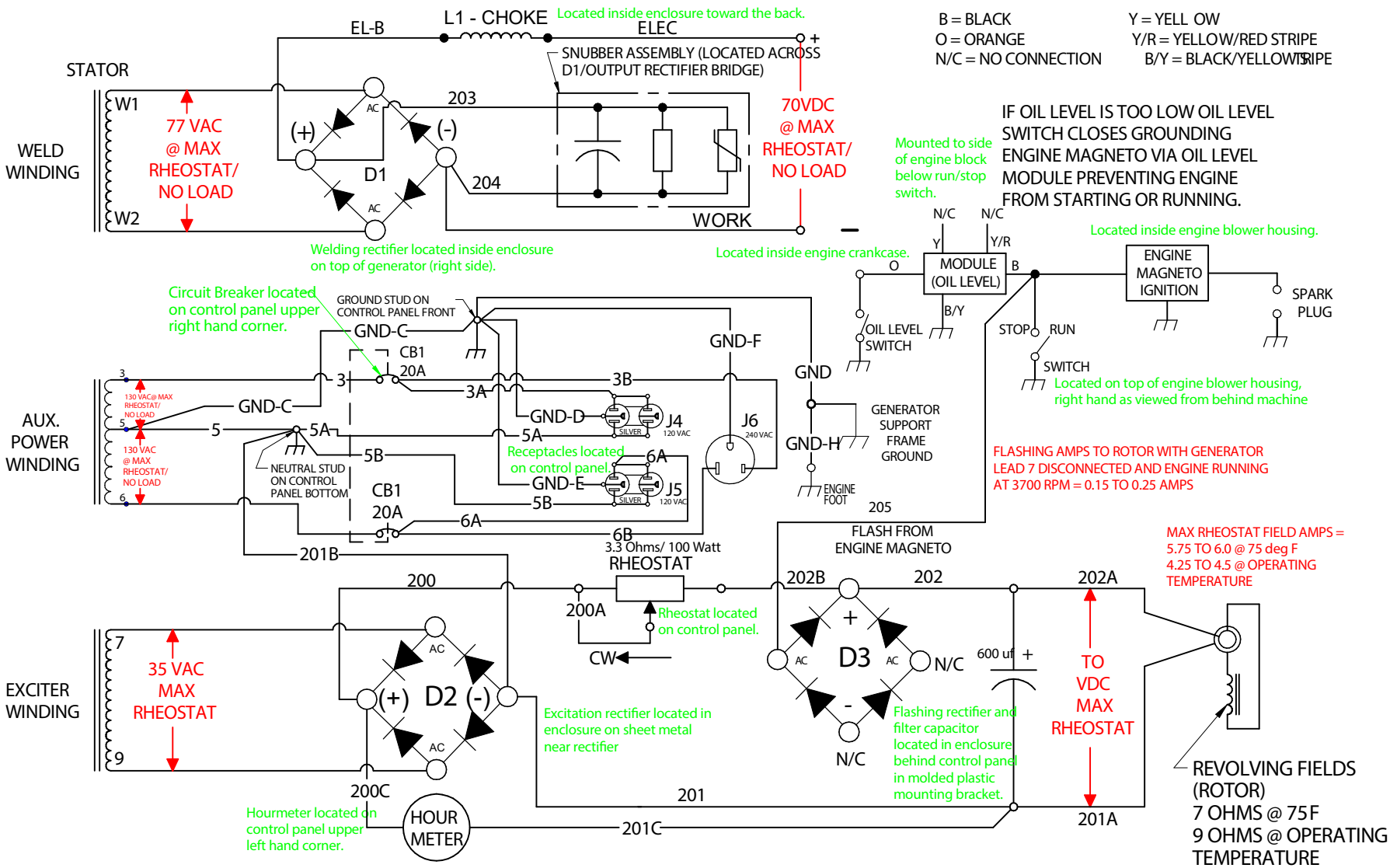

6/22