WELDMARK 225

IM927

January, 2007

For Machines with Code Number 11396

This manual covers equipment which is no longer in production by The Lincoln Electric Co. Specifications and availability of optional features may have changed.

Safety Depends on You

Lincoln arc welding and cutting equipment is designed and built with safety in mind. However, your overall safety can be increased by proper installation ... and thoughtful operation on your part. **DO NOT INSTALL, OPERATE OR REPAIR THIS EQUIPMENT WITHOUT READING THIS MANUAL AND THE SAFETY PRECAUTIONS CONTAINED THROUGHOUT.** And, most importantly, think before you act and be careful.

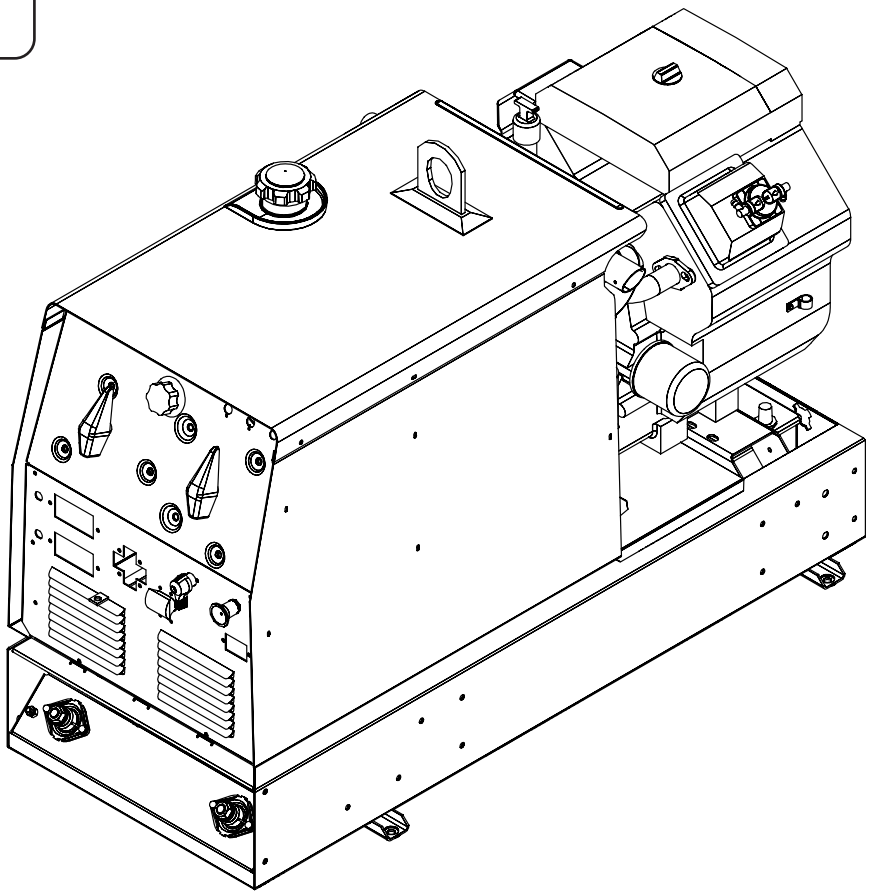

C US

OPERATOR'S MANUAL

ISO 9001

Designed and Manufactured Under a Quality Program Certified by ABS Quality Evaluations, Inc. to ISO 9001 Requirements.
CERTIFICATE NUMBER: 30273

WELDMARK 225

Copyright © 2007 Lincoln Global Inc.

• Manufactured by Lincoln Electric Company •
Cleveland, Ohio 44117-1199 U.S.A. TEL: 216.481.8100 FAX: 216.486.1751 WEB SITE: www.lincolnelectric.com

⚠ WARNING

⚠ CALIFORNIA PROPOSITION 65 WARNINGS ⚠

Diesel engine exhaust and some of its constituents are known to the State of California to cause cancer, birth defects, and other reproductive harm.

The Above For Diesel Engines

The engine exhaust from this product contains chemicals known to the State of California to cause cancer, birth defects, or other reproductive harm.

The Above For Gasoline Engines

ARC WELDING CAN BE HAZARDOUS. PROTECT YOURSELF AND OTHERS FROM POSSIBLE SERIOUS INJURY OR DEATH. KEEP CHILDREN AWAY. PACEMAKER WEARERS SHOULD CONSULT WITH THEIR DOCTOR BEFORE OPERATING.

Read and understand the following safety highlights. For additional safety information, it is strongly recommended that you purchase a copy of “Safety in Welding & Cutting - ANSI Standard Z49.1” from the American Welding Society, P.O. Box 351040, Miami, Florida 33135 or CSA Standard W117.2-1974. A Free copy of “Arc Welding Safety” booklet E205 is available from the Lincoln Electric Company, 22801 St. Clair Avenue, Cleveland, Ohio 44117-1199.

BE SURE THAT ALL INSTALLATION, OPERATION, MAINTENANCE AND REPAIR PROCEDURES ARE PERFORMED ONLY BY QUALIFIED INDIVIDUALS.

FOR ENGINE powered equipment.

1.a. Turn the engine off before troubleshooting and maintenance work unless the maintenance work requires it to be running.

1.b. Operate engines in open, well-ventilated areas or vent the engine exhaust fumes outdoors.

1.c. Do not add the fuel near an open flame welding arc or when the engine is running. Stop the engine and allow it to cool before refueling to prevent spilled fuel from vaporizing on contact with hot engine parts and igniting. Do not spill fuel when filling tank. If fuel is spilled, wipe it up and do not start engine until fumes have been eliminated.

1.d. Keep all equipment safety guards, covers and devices in position and in good repair.Keep hands, hair, clothing and tools away from V-belts, gears, fans and all other moving parts when starting, operating or repairing equipment.

1.e. In some cases it may be necessary to remove safety guards to perform required maintenance. Remove guards only when necessary and replace them when the maintenance requiring their removal is complete. Always use the greatest care when working near moving parts.

1.f. Do not put your hands near the engine fan. Do not attempt to override the governor or idler by pushing on the throttle control rods while the engine is running.

1.g. To prevent accidentally starting gasoline engines while turning the engine or welding generator during maintenance work, disconnect the spark plug wires, distributor cap or magneto wire as appropriate.

1.h. To avoid scalding, do not remove the radiator pressure cap when the engine is hot.

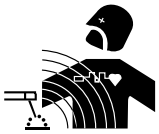

ELECTRIC AND MAGNETIC FIELDS may be dangerous

2.a. Electric current flowing through any conductor causes localized Electric and Magnetic Fields (EMF). Welding current creates EMF fields around welding cables and welding machines

2.b. EMF fields may interfere with some pacemakers, and welders having a pacemaker should consult their physician before welding.

2.c. Exposure to EMF fields in welding may have other health effects which are now not known.

2.d. All welders should use the following procedures in order to minimize exposure to EMF fields from the welding circuit:

2.d.1. Route the electrode and work cables together - Secure them with tape when possible.

2.d.2. Never coil the electrode lead around your body.

2.d.3. Do not place your body between the electrode and work cables. If the electrode cable is on your right side, the work cable should also be on your right side.

2.d.4. Connect the work cable to the workpiece as close as possible to the area being welded.

2.d.5. Do not work next to welding power source.

Mar ‘95

ELECTRIC SHOCK can kill.

3.a. The electrode and work (or ground) circuits are electrically "hot" when the welder is on. Do not touch these "hot" parts with your bare skin or wet clothing. Wear dry, hole-free gloves to insulate hands.

3.b. Insulate yourself from work and ground using dry insulation. Make certain the insulation is large enough to cover your full area of physical contact with work and ground.

In addition to the normal safety precautions, if welding must be performed under electrically hazardous conditions (in damp locations or while wearing wet clothing; on metal structures such as floors, gratings or scaffolds; when in cramped positions such as sitting, kneeling or lying, if there is a high risk of unavoidable or accidental contact with the workpiece or ground) use the following equipment:

- **Semiautomatic DC Constant Voltage (Wire) Welder.**
- **DC Manual (Stick) Welder.**
- **AC Welder with Reduced Voltage Control.**

3.c. In semiautomatic or automatic wire welding, the electrode, electrode reel, welding head, nozzle or semiautomatic welding gun are also electrically "hot".

3.d. Always be sure the work cable makes a good electrical connection with the metal being welded. The connection should be as close as possible to the area being welded.

3.e. Ground the work or metal to be welded to a good electrical (earth) ground.

3.f. Maintain the electrode holder, work clamp, welding cable and welding machine in good, safe operating condition. Replace damaged insulation.

3.g. Never dip the electrode in water for cooling.

3.h. Never simultaneously touch electrically "hot" parts of electrode holders connected to two welders because voltage between the two can be the total of the open circuit voltage of both welders.

3.i. When working above floor level, use a safety belt to protect yourself from a fall should you get a shock.

3.j. Also see Items 6.c. and 8.

ARC RAYS can burn.

4.a. Use a shield with the proper filter and cover plates to protect your eyes from sparks and the rays of the arc when welding or observing open arc welding. Headshield and filter lens should conform to ANSI Z87. I standards.

4.b. Use suitable clothing made from durable flame-resistant material to protect your skin and that of your helpers from the arc rays.

4.c. Protect other nearby personnel with suitable, non-flammable screening and/or warn them not to watch the arc nor expose themselves to the arc rays or to hot spatter or metal.

FUMES AND GASES can be dangerous.

5.a. Welding may produce fumes and gases hazardous to health. Avoid breathing these fumes and gases.When welding, keep your head out of the fume. Use enough ventilation and/or exhaust at the arc to keep fumes and gases away from the breathing zone. **When welding with electrodes which require special ventilation such as stainless or hard facing (see instructions on container or MSDS) or on lead or cadmium plated steel and other metals or coatings which produce highly toxic fumes, keep exposure as low as possible and below Threshold Limit Values (TLV) using local exhaust or mechanical ventilation. In confined spaces or in some circumstances, outdoors, a respirator may be required. Additional precautions are also required when welding on galvanized steel.**

5. b. The operation of welding fume control equipment is affected by various factors including proper use and positioning of the equipment, maintenance of the equipment and the specific welding procedure and application involved. Worker exposure level should be checked upon installation and periodically thereafter to be certain it is within applicable OSHA PEL and ACGIH TLV limits.

5.c. Do not weld in locations near chlorinated hydrocarbon vapors coming from degreasing, cleaning or spraying operations. The heat and rays of the arc can react with solvent vapors to form phosgene, a highly toxic gas, and other irritating products.

5.d. Shielding gases used for arc welding can displace air and cause injury or death. Always use enough ventilation, especially in confined areas, to insure breathing air is safe.

5.e. Read and understand the manufacturer's instructions for this equipment and the consumables to be used, including the material safety data sheet (MSDS) and follow your employer's safety practices. MSDS forms are available from your welding distributor or from the manufacturer.

5.f. Also see item 1.b.

AUG 06

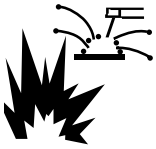

WELDING and CUTTING SPARKS can cause fire or explosion.

6.a. Remove fire hazards from the welding area. If this is not possible, cover them to prevent the welding sparks from starting a fire. Remember that welding sparks and hot materials from welding can easily go through small cracks and openings to adjacent areas. Avoid welding near hydraulic lines. Have a fire extinguisher readily available.

6.b. Where compressed gases are to be used at the job site, special precautions should be used to prevent hazardous situations. Refer to “Safety in Welding and Cutting” (ANSI Standard Z49.1) and the operating information for the equipment being used.

6.c. When not welding, make certain no part of the electrode circuit is touching the work or ground. Accidental contact can cause overheating and create a fire hazard.

6.d. Do not heat, cut or weld tanks, drums or containers until the proper steps have been taken to insure that such procedures will not cause flammable or toxic vapors from substances inside. They can cause an explosion even though they have been “cleaned”. For information, purchase “Recommended Safe Practices for the Preparation for Welding and Cutting of Containers and Piping That Have Held Hazardous Substances”, AWS F4.1 from the American Welding Society (see address above).

6.e. Vent hollow castings or containers before heating, cutting or welding. They may explode.

6.f. Sparks and spatter are thrown from the welding arc. Wear oil free protective garments such as leather gloves, heavy shirt, cuffless trousers, high shoes and a cap over your hair. Wear ear plugs when welding out of position or in confined places. Always wear safety glasses with side shields when in a welding area.

6.g. Connect the work cable to the work as close to the welding area as practical. Work cables connected to the building framework or other locations away from the welding area increase the possibility of the welding current passing through lifting chains, crane cables or other alternate circuits. This can create fire hazards or overheat lifting chains or cables until they fail.

6.h. Also see item 1.c.

6.I. Read and folllow NFPA 51B “ Standard for Fire Prevention During Welding, Cutting and Other Hot Work”, available from NFPA, 1 Batterymarch Park,PO box 9101, Quincy, Ma 022690-9101.

6.j. Do not use a welding power source for pipe thawing.

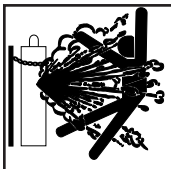

CYLINDER may explode if damaged.

7.a. Use only compressed gas cylinders containing the correct shielding gas for the process used and properly operating regulators designed for the gas and pressure used. All hoses, fittings, etc. should be suitable for the application and maintained in good condition.

7.b. Always keep cylinders in an upright position securely chained to an undercarriage or fixed support.

7.c. Cylinders should be located:

- Away from areas where they may be struck or subjected to physical damage.
- A safe distance from arc welding or cutting operations and any other source of heat, sparks, or flame.

7.d. Never allow the electrode, electrode holder or any other electrically “hot” parts to touch a cylinder.

7.e. Keep your head and face away from the cylinder valve outlet when opening the cylinder valve.

7.f. Valve protection caps should always be in place and hand tight except when the cylinder is in use or connected for use.

7.g. Read and follow the instructions on compressed gas cylinders, associated equipment, and CGA publication P-I, “Precautions for Safe Handling of Compressed Gases in Cylinders,” available from the Compressed Gas Association 1235 Jefferson Davis Highway, Arlington, VA 22202.

FOR ELECTRICALLY powered equipment.

8.a. Turn off input power using the disconnect switch at the fuse box before working on the equipment.

8.b. Install equipment in accordance with the U.S. National Electrical Code, all local codes and the manufacturer’s recommendations.

8.c. Ground the equipment in accordance with the U.S. National Electrical Code and the manufacturer’s recommendations.

Jan, 07

PRÉCAUTIONS DE SÛRETÉ

Pour votre propre protection lire et observer toutes les instructions et les précautions de sûreté specifiques qui parraissent dans ce manuel aussi bien que les précautions de sûreté générales suivantes:

Sûreté Pour Soudage A L'Arc

1. Protegez-vous contre la secousse électrique:

   a. Les circuits à l'électrode et à la piéce sont sous tension quand la machine à souder est en marche. Eviter toujours tout contact entre les parties sous tension et la peau nue ou les vétements mouillés. Porter des gants secs et sans trous pour isoler les mains.
   b. Faire trés attention de bien s'isoler de la masse quand on soude dans des endroits humides, ou sur un plancher metallique ou des grilles metalliques, principalement dans les positions assis ou couché pour lesquelles une grande partie du corps peut être en contact avec la masse.
   c. Maintenir le porte-électrode, la pince de masse, le câble de soudage et la machine à souder en bon et sûr état defonctionnement.
   d.Ne jamais plonger le porte-électrode dans l'eau pour le refroidir.
   e. Ne jamais toucher simultanément les parties sous tension des porte-électrodes connectés à deux machines à souder parce que la tension entre les deux pinces peut être le total de la tension à vide des deux machines.
   f. Si on utilise la machine à souder comme une source de courant pour soudage semi-automatique, ces precautions pour le porte-électrode s'applicuent aussi au pistolet de soudage.

2. Dans le cas de travail au dessus du niveau du sol, se protéger contre les chutes dans le cas ou on recoit un choc. Ne jamais enrouler le câble-électrode autour de n'importe quelle partie du corps.

3. Un coup d'arc peut être plus sévère qu'un coup de soliel, donc:

   a. Utiliser un bon masque avec un verre filtrant approprié ainsi qu'un verre blanc afin de se protéger les yeux du rayonnement de l'arc et des projections quand on soude ou quand on regarde l'arc.
   b. Porter des vêtements convenables afin de protéger la peau de soudeur et des aides contre le rayonnement de l'arc.
   c. Protéger l'autre personnel travaillant à proximité au soudage à l'aide d'écrans appropriés et non-inflammables.

4. Des gouttes de laitier en fusion sont émises de l'arc de soudage. Se protéger avec des vêtements de protection libres de l'huile, tels que les gants en cuir, chemise épaisse, pantalons sans revers, et chaussures montantes.

5. Toujours porter des lunettes de sécurité dans la zone de soudage. Utiliser des lunettes avec écrans lateraux dans les zones où l'on pique le laitier.

6. Eloigner les matériaux inflammables ou les recouvrir afin de prévenir tout risque d'incendie dû aux étincelles.

7. Quand on ne soude pas, poser la pince à une endroit isolé de la masse. Un court-circuit accidental peut provoquer un échauffement et un risque d'incendie.

8. S'assurer que la masse est connectée le plus prés possible de la zone de travail qu'il est pratique de le faire. Si on place la masse sur la charpente de la construction ou d'autres endroits éloignés de la zone de travail, on augmente le risque de voir passer le courant de soudage par les chaines de levage, câbles de grue, ou autres circuits. Cela peut provoquer des risques d'incendie ou d'echauffement des chaines et des câbles jusqu'à ce qu'ils se rompent.

9. Assurer une ventilation suffisante dans la zone de soudage. Ceci est particuliérement important pour le soudage de tôles galvanisées plombées, ou cadmiées ou tout autre métal qui produit des fumeés toxiques.

10. Ne pas souder en présence de vapeurs de chlore provenant d'opérations de dégraissage, nettoyage ou pistolage. La chaleur ou les rayons de l'arc peuvent réagir avec les vapeurs du solvant pour produire du phosgéne (gas fortement toxique) ou autres produits irritants.

11. Pour obtenir de plus amples renseignements sur la sûreté, voir le code "Code for safety in welding and cutting" CSA Standard W 117.2-1974.

PRÉCAUTIONS DE SÛRETÉ POUR LES MACHINES À SOUDER À TRANSFORMATEUR ET À REDRESSEUR

1. Relier à la terre le chassis du poste conformement au code de l'électricité et aux recommendations du fabricant. Le dispositif de montage ou la piece à souder doit être branché à une bonne mise à la terre.

2. Autant que possible, l'installation et l'entretien du poste seront effectués par un électricien qualifié.

3. Avant de faires des travaux à l'interieur de poste, la debrancher à l'interrupteur à la boite de fusibles.

4. Garder tous les couvercles et dispositifs de sûreté à leur place.

Mar. '93

Thank — for selecting a **QUALITY** product by Lincoln Electric. We want you to take pride in operating this Lincoln Electric Company product ••• as much pride as we have in bringing this product to you!

CUSTOMER ASSISTANCE POLICY

The business of The Lincoln Electric Company is manufacturing and selling high quality welding equipment, consumables, and cutting equipment. Our challenge is to meet the needs of our customers and to exceed their expectations. On occasion, purchasers may ask Lincoln Electric for advice or information about their use of our products. We respond to our customers based on the best information in our possession at that time. Lincoln Electric is not in a position to warrant or guarantee such advice, and assumes no liability, with respect to such information or advice. We expressly disclaim any warranty of any kind, including any warranty of fitness for any customer's particular purpose, with respect to such information or advice. As a matter of practical consideration, we also cannot assume any responsibility for updating or correcting any such information or advice once it has been given, nor does the provision of information or advice create, expand or alter any warranty with respect to the sale of our products.

Lincoln Electric is a responsive manufacturer, but the selection and use of specific products sold by Lincoln Electric is solely within the control of, and remains the sole responsibility of the customer. Many variables beyond the control of Lincoln Electric affect the results obtained in applying these types of fabrication methods and service requirements.

Subject to Change – This information is accurate to the best of our knowledge at the time of printing. Please refer to www.lincolnelectric.com for any updated information.

Please Examine Carton and Equipment For Damage Immediately

When this equipment is shipped, title passes to the purchaser upon receipt by the carrier. Consequently, Claims for material damaged in shipment must be made by the purchaser against the transportation company at the time the shipment is received.

Please record your equipment identification information below for future reference. This information can be found on your machine nameplate.

Product _____

Model Number _____

Code Number or Date Code_____

Serial Number_____

Date Purchased_____

Where Purchased_____

Whenever you request replacement parts or information on this equipment, always supply the information you have recorded above. The code number is especially important when identifying the correct replacement parts.

On-Line Product Registration

- Register your machine with Lincoln Electric either via fax or over the Internet.

• For faxing: Complete the form on the back of the warranty statement included in the literature packet accompanying this machine and fax the form per the instructions printed on it.

• For On-Line Registration: Go to our **WEB SITE at www.lincolnelectric.com.** Choose "Quick Links" and then "Product Registration". Please complete the form and submit your registration.

Read this Operators Manual completely before attempting to use this equipment. Save this manual and keep it handy for quick reference. Pay particular attention to the safety instructions we have provided for your protection. The level of seriousness to be applied to each is explained below:

⚠ WARNING

This statement appears where the information **must** be followed **exactly** to avoid **serious personal injury** or **loss of life**.

⚠ CAUTION

This statement appears where the information **must** be followed to avoid **minor personal injury** or **damage to this equipment**.

TABLE OF CONTENTS

Page

Installation.....Section A
Technical Specifications.....A-1
Safety Precautions.....A-2
Machine Grounding.....A-2
Spark Arrester.....A-2
Towing.....A-2
Vehicle Mounting.....A-3
Pre-Operation Engine Service.....A-3
Fuel, Oil.....A-3
Battery Connections.....A-3
Welding Output Cables.....A-3
Angle of Operation.....A-4
Lifting.....A-4
High Altitude Operation.....A-4
Location and Ventilation.....A-5
Stacking.....A-5
Connection of Wire Feeders.....A-5
Connection of Tig Module.....A-5
Additional Safety Precautions.....A-5
Welding Operation, Auxiliary Power Receptacles, and Plugs.....A-6
Motor Starting and Extension Cord Length Table.....A-6
Electrical Device Used with the Weldmark 225.....A-7
Auxiliary Power While Welding, Standby Power Connections.....A-8
Premises Wiring.....A-9

Operation.....Section B
Safety Precautions.....B-1
General Description.....B-1
Welder Controls Function and Operation.....B-1
Polarity, Range and Control Switch.....B-2
Start in/Shutdown Instructions.....B-3
Starting the Engine.....B-3
Safety Precautions.....B-3
Stopping the Engine.....B-3
Break-In Period.....B-3
Welding Process.....B-4
Stick (Constant Current) Welding.....B-4
TIG (Constant Current) Welding.....B-4
Wire Feed Welding Processes (Constant Voltage).....B-4
Arc Gouging.....B-4
Summary of Welding Processes.....B-5

Accessories.....Section C
Optional Equipment.....C-1
Recommended Equipment.....C-2

Maintenance.....Section D
Safety Precautions.....D-1
Routine Engine Maintenance, Engine Oil Change, Oil Refill Capacities.....D-1
Oil Filter Change.....D-2
Overspeed Is Hazardous, Slip Rings.....D-3
Battery Maintenance, Hardware.....D-3
Engine Maintenance Parts.....D-3

Troubleshooting.....Section E
How to Use Troubleshooting Guide.....E-1
Troubleshooting Guide.....E-2, E-3

Wiring Diagrams & Dimension Print.....Section F
Wiring and Connection Diagrams.....F-1,F-2
Dimension Print.....F3

Parts List.....P-500

TECHNICAL SPECIFICATIONS - Weldmark 225 (K2239-4)

INPUT - GASOLINE ENGINE						
Make/Model	**Description**	**Horsepower**	**Operating Speed (RPM)**	**Displacement cu. in. (cu.cm.)**	**Starting System**	**Capacities**
Kohler CH23S	2 cylinder 4 Cycle Air-Cooled Gasoline Engine. Aluminum Alloy with Cast Iron Liners, Electronic Ignition	23 HP @ 3600 RPM (Kohler)	High Idle 3700 Full Load 3500 Low Idle 2200	41(674) Kohler	12VDC Battery Electric Start Group 58 Battery (435 cold Cranking Amps)	Fuel: 9 Gal (34 L) Lubricating Oil: 2.0 Qts. (1.9 L)

RATED OUTPUT @ 104°F (40°C) FOR WELDER
Welding Output
AC Constant Current 225A / 25V / 100% DC Constant Current 210A / 25V / 100% DC Constant Voltage 200A / 20V / 100%

RATED OUTPUT @ 104°F (40°C) FOR GENERATOR
Auxiliary Power [1]
10,500 Watts Peak, 60 Hz AC 9,000 Watts Continuous, 60 Hz AC 120/240 Volts

PHYSICAL DIMENSIONS			
HEIGHT	**WIDTH**	**DEPTH**	**WEIGHT**
30.3 in. 770 mm	19.1 in. 485 mm	42.3 in. 1074 mm	502 lbs. (228kg)

1. Output rating in watts is equivalent to volt - amperes at unity factor. Output voltage is within +/-10% at all loads up to rated capacity. When welding available auxiliary power will be reduced.

SAFETY PRECAUTIONS

⚠ WARNING

Do not attempt to use this equipment until you have thoroughly read the engine manufacturer's manual supplied with your welder. It includes important safety precautions, detailed engine starting, operating and maintenance instructions, and parts lists.

ELECTRIC SHOCK can kill.
- **Do not touch electrically live parts or electrode with skin or wet clothing.**
- **Insulate yourself from work and ground**
- **Always wear dry insulating gloves.**

ENGINE EXHAUST can kill.
- **Use in open, well ventilated areas or vent exhaust outside.**

MOVING PARTS can injure.
- **Do not operate with doors open or guards off.**
- **Stop engine before servicing.**
- **Keep away from moving parts.**

See additional warning information at front of this operator's manual.

MACHINE GROUNDING

Because this portable engine driven welder or generator creates it's own power, it is not necessary to connect it's frame to an earth ground, unless the machine is connected to premises wiring (your home, shop, etc.).

⚠ WARNING

To prevent dangerous electric shock, other equipment to which this engine driven welder supplies power must:

- **be grounded to the frame of the welder using a grounded type plug, or be double insulated.**

Do not ground the machine to a pipe that carries explosive or combustible material.

When this welder is mounted on a truck or trailer, its frame must be electrically bonded to the metal frame of the vehicle. Use a #8 or larger copper wire connected between the machine grounding stud and the frame of the vehicle.

Where this engine driven welder is connected to premises wiring such as that in your home or shop, its frame must be connected to the system earth ground. See further connection instructions in the section entitled "Standby Power Connections", as well as the article on grounding in the latest National Electrical Code and the local code.

In general, if the machine is to be grounded, it should be connected with a #8 or larger copper wire to a solid earth ground such as a metal water pipe going into the ground for at least ten feet and having no insulated joints, or to the metal framework of a building which has been effectively grounded. The National Electrical Code lists a number of alternate means of grounding electrical equipment. A machine grounding stud marked with the symbol ⏚ is provided on the front of the welder.

SPARK ARRESTER

Some federal, state, or local laws may require that gasoline engines be equipped with exhaust spark arresters when they are operated in certain locations where unarrested sparks may present a fire hazard. The standard muffler included with this welder does not qualify as a spark arrester. When required by local regulations, the K894-1 spark arrester must be installed and properly maintained.

⚠ CAUTION

An incorrect arrester may lead to damage to the engine or adversely affect performance.

TOWING

The recommended trailer for use with this equipment for road, in-plant and yard towing by a vehicle(1) is Lincoln's K957-1. If the user adapts a non-Lincoln trailer, he must assume responsibility that the method of attachment and usage does not result in a safety hazard nor damage the welding equipment. Some of the factors to be considered are as follows:

1. Design capacity of trailer vs. weight of Lincoln equipment and likely additional attachments.

2. Proper support of, and attachment to, the base of the welding equipment so there will be no undue stress to the framework.

3. Proper placement of the equipment on the trailer to insure stability side to side and front to back when being moved and when standing by itself while being operated or serviced.

4. Typical conditions of use, i.e., travel speed; roughness of surface on which the trailer will be operated; environmental conditions.

5. Conformance with federal, state and local laws(1)

(1) Consult applicable federal, state and local laws regarding specific requirements for use on public highways.

VEHICLE MOUNTING

Improperly mounted concentrated loads may cause unstable vehicle handling and tires or other components to fail.

- **Only transport this Equipment on serviceable vehicles which are rated and designed for such loads.**
- **Distribute, balance and secure loads so vehicle is stable under conditions of use.**
- **Do not exceed maximum rated loads for components such as suspension, axles and tires.**
- **Use appropriate nuts bolts and lockwashers to attach the equipment base to the metal bed or frame of vehicle.**
- **Follow vehicle manufacturer's instructions.**

PRE-OPERATION SERVICE

⚠ CAUTION

READ the engine operating and maintenance instructions supplied with this machine.

⚠ WARNING

- **Stop engine while fueling.**
- **Do not smoke when fueling.**
- **Keep sparks and flame away from tank.**
- **Do not leave unattended while fueling.**
- **Wipe up spilled fuel and allow fumes to clear before starting engine.**
- **Do not overfill tank, fuel expansion may cause overflow.**

GASOLINE can cause fire or explosion.

GASOLINE FUEL ONLY

FUEL

Fill the fuel tank with clean, fresh, lead-free gasoline. Observe fuel gauge while filling to prevent overfilling.

⚠ WARNING

- **Damage to the fuel tank may cause fire or explosion. Do not drill holes in the WELDMARK 225 base or weld to WELDMARK 225 base.**

LUBRICATION SYSTEM CAPACITY
(INCLUDING FILTER)
Kohler CH23S - 2.0 Quarts (1.9 Liters)

OIL

The Weldmark 225 is shipped with the engine crankcase filled with SAE 10W-30 oil. Check the oil level before starting the engine. If it is not up to the full mark on the dip stick, add oil as required. Make certain that the oil filler cap is tightened securely. Refer to the engine Owner's Manual for specific oil recommendations.

BATTERY CONNECTIONS

⚠ CAUTION

Use caution as the electrolyte is a strong acid that can burn skin and damage eyes.

This welder is shipped with the negative battery cable disconnected. Make sure that the Engine Switch is in the "STOP" position and attach the disconnected cable securely to the negative battery terminal before attempting to operate the machine. If the battery is discharged and does not have enough power to start the engine, see the battery charging instructions in the Battery section.

NOTE: This machine is furnished with a wet charged battery; if unused for several months, the battery may require a booster charge. Be careful to charge the battery with the correct polarity.

WELDING OUTPUT CABLES

With the engine off, connect the electrode and work cables to the studs provided. These connections should be checked periodically and tightened if necessary. Loose connections will result in overheating of the output studs.

When welding at a considerable distance from the welder, be sure you use ample size welding cables. Listed below are copper cable sizes recommended for the rated current and duty cycle. Lengths stipulated are the distance from the welder to work and back to the welder again. Cable sizes are increased for greater lengths primarily for the purpose of minimizing cable voltage drop.

TOTAL COMBINED LENGTH OF ELECTRODE AND WORK CABLES	
	225 Amps 100% Duty Cycle
0-100 Ft. (0-30.5m)	1 AWG
100-200 Ft. (30.5-60.9m)	1 AWG
200-250 Ft. (60.9-76.2m)	1/0 AWG

ANGLE OF OPERATION

Internal combustion engines are designed to run in a level condition which is where the optimum performance is achieved. The maximum angle of operation for the engine is 15 degrees from horizontal in any direction. If the engine is to be operated at an angle, provisions must be made for checking and maintaining the oil at the normal (FULL) oil capacity in the crankcase in a level condition.

When operating at an angle, the effective fuel capacity will be slightly less than the specified 9 gallons.

LIFTING

The WELDMARK 225 weighs approximately 575 lbs.(261Kg) with a full tank of gasoline. A lift bail is mounted to the machine and should always be used when lifting machine. (Do not use lift bail if heavy accessory or trailer attached-see warning).

⚠ WARNING

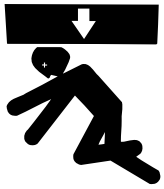

FALLING EQUIPMENT can cause injury.

- **Lift only with equipment of adequate lifting capacity.**
- **Be sure machine is stable when lifting.**
- **Do not lift this machine using lift bail if it is equipped with a heavy accessory such as trailer or gas cylinder.**
- **Do not lift machine if lift bail is damaged.**
- **Do not operate machine while suspended from lift bail.**

HIGH ALTITUDE OPERATION

At higher altitudes, Welder output de-rating may be necessary.

For maximum rating, de-rate the welder output 3.5% for every 1000ft. (305m) above 3000ft. (914m).

If operation will consistently be at altitudes above 5,000 ft. (1525m), a carburetor jet designed for high altitudes should be installed. This will result in better fuel economy, cleaner exhaust and longer spark plug life. It will not give increased power. Contact your local authorized engine service shop for high altitude jet kits that are available from the engine manufacturer.

⚠ CAUTION

Do not operate with a high altitude jet installed at altitudes below 5000 ft. This will result in the engine running too lean and result in higher engine operating temperatures which can shorten engine life.

Muffler Relocation

⚠ WARNING

- **Shut off welder and allow muffler to cool before touching muffler.**

The WELDMARK 225 is shipped with the exhaust coming out on the left side. The exhaust can be changed to the opposite side by removing the two screws that hold the exhaust port cover in place and installing the cover on the opposite side. (Operating the WELDMARK 225 without the cover in place will result in a higher noise level and no increase in machine output.)

LOCATION / VENTILATION

The welder should be located to provide an unrestricted flow of clean, cool air to the cooling air inlets and to avoid heated air coming out of the welder recirculating back to the cooling air inlet. Also, locate the welder so that engine exhaust fumes are properly vented to an outside area.

⚠ CAUTION

DO NOT MOUNT OVER COMBUSTIBLE SURFACES.
Where there is a combustible surface directly under stationary or fixed electrical equipment, the surface shall be covered with a steel plate at least .06"(1.6mm) thick, which shall extend not more than 5.90"(150mm) beyond the equipment on all sides.

STACKING

WELDMARK 225 machines cannot be stacked.

CONNECTION OF LINCOLN ELECTRIC WIRE FEEDERS

⚠ WARNING

Shut off welder before making any electrical connections.

WIRE FEED (CONSTANT VOLTAGE)
CONNECTION OF LN-15 ACROSS-THE-ARC WIRE

FEEDER

The LN-15 has an internal contactor and the electrode is not energized until the gun trigger is closed. When the gun trigger is closed the wire will begin to feed and the welding process is started.

a. Shut the welder off.

b. Set the Polarity switch to the desired polarity, either DC (-) or DC (+).

c. Attach the single lead from the front of the LN-15 to work using the spring clip at the end of the lead. This is a control lead to supply current to the wire feeder motor; it does not carry welding current.

d. Set the "RANGE" switch to the "WIRE FEED-CV" position.

e. Place the Engine switch in the "Auto Idle" position.

f. Adjust the wire feed speed at the LN-15 and adjust the welding voltage with the output "CONTROL" at the welder. Output "CONTROL" must be set above 3.

Note: LN-15 Control Cable model will not work with the WELDMARK 225.

CONNECTION OF THE LN-25
TO THE WELDMARK 225

- Shut the welder off.
- Connect the electrode cable from the LN-25 to the"ELECTRODE" terminal of the welder. Connect the work cable to the "TO WORK" terminal of the welder.
- Position the welder "Polarity" switch to the desired polarity, either DC (-) or DC (+).
- Position the "RANGE" switch to the "WIRE FEED" position.
- Attach the single lead from the LN-25 control box to the work using the spring clip on the end of the lead - it carries no welding current.
- Place the engine switch in the "AUTO" position.
- Adjust wire feed speed at the LN-25 and adjust the welding voltage with the output "CONTROL" at the welder.

NOTE: The welding electrode is energized at all times, unless an LN-25 with built-in contactor is used. If the output "CONTROL" is set below "3", the LN-25 contactor may not pull in.

CONNECTION OF K930-2 TIG MODULE TO THE WELDMARK 225.

The TIG Module is an accessory that provides high frequency and shielding gas control for AC and DC GTAW (TIG) welding. See IM528 supplied with the TIG Module for installation instructions.

Note: The TIG Module does not require the use of a high frequency bypass capacitor. However, if the WELDMARK 225 is used with any other high frequency equipment, the bypass capacitor must be installed, order kit T12246.

INSTRUCTIONS

ADDITIONAL SAFETY PRECAUTIONS

Always operate the welder with the roof and case sides in place as this provides maximum protection from moving parts and assures proper cooling air flow.

Read and understand all Safety Precautions before operating this machine. Always follow these and any other safety procedures included in this manual and in the Engine Owner's Manual.

WELDER OPERATION

WELDER OUTPUT

- Maximum Open Circuit Voltage at 3700 RPM is 80 Volts RMS.
- Duty Cycle is the percentage of time the load is being applied in a 10 minute period. For example, a 60% duty cycle represents 6 minutes of load and 4 minutes of no load in a 10 minute period. Duty Cycle for the WELDMARK 225 is 100%.

WELDMARK 225	
Constant Current	225 Amps AC @ 25 Volts 210 Amps DC @ 25 Volts
Constant Voltage	200 Amps DC @ 20 Volts

AUXILIARY POWER

The WELDMARK 225 can provide up to 9,000 watts of 120/240 volts AC, single phase 60Hz power for continuous use, and up to 10,500 watts of 120/240 volts AC, single phase 60Hz power peak use. The front of the machine includes three receptacles for connecting the AC power plugs; one 50 amp 120/240 volt NEMA 14-50R receptacle and two 20 amp 120 volt NEMA 5-20R receptacles. Output voltage is within +/-10% at all loads up to rated capacity. All auxiliary power is protected by circuit breakers. All auxiliary power is protected by circuit breakers.

⚠ CAUTION

Do not connect any plugs that connect to the power receptacles in parallel.

Start the engine and set the “IDLER” control switch to the desired operating mode. Set the “CONTROL” to 10. Voltage is now correct at the receptacles for auxiliary power.

120/240 VOLT DUAL VOLTAGE RECEPTACLE

The 120/240 volt receptacle can supply up to 38 amps of 240 volt power to a two wire circuit, up to 38 amps of 120 volts power from each side of a three wire circuit (up to 76 amps total). Do not connect the 120 volt circuits in parallel. Current sensing for the automatic idle feature is only in one leg of the three wire circuit as shown in the following column.

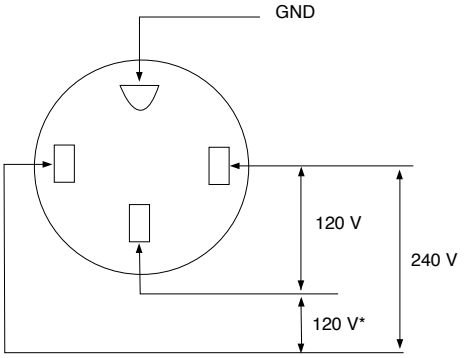

*Current Sensing for Automatic Idle.
(Receptacle viewed from front of Machine)

120 V DUPLEX RECEPTACLES

The 120V auxiliary power receptacles should only be used with three wire grounded type plugs or approved double insulated tools with two wire plugs.

The current rating of any plug used with the system must be at least equal to the current load through the associated receptacle.

MOTOR STARTING

Most 1.5 hp AC single phase motors can be started if there is no load on the motor or other load connected to the machine, since the full load current rating of a 1.5 hp motor is approximately 20 amperes (10 amperes for 240 volt motors). The motor may be run at full load when plugged into only one side of the duplex receptacle. Larger motors through 2 hp can be run provided the receptacle rating as previously stated is not exceeded. This may necessitate 240V operation only.

WELDMARK 225 Extension Cord Length Recommendations
(Use the shortest length extension cord possible sized per the following table.)

Current (Amps)	Voltage Volts	Load (Watts)	Maximum Allowable Cord Length in ft. (m) for Conductor Size											
			14 AWG		12 AWG		10 AWG		8 AWG		6 AWG		4 AWG	
15	120	1800	30	(9)	40	(12)	75	(23)	125	(38)	175	(53)	300	(91)
20	120	2400			30	(9)	50	(15)	88	(27)	138	(42)	225	(69)
15	240	3600	60	(18)	75	(23)	150	(46)	225	(69)	350	(107)	600	(183)
20	240	4800			60	(18)	100	(30)	175	(53)	275	(84)	450	(137)
38	240	9000					50	(15)	90	(27)	150	(46)	225	(69)
Conductor size is based on maximum 2.0% voltage drop.														

TABLE III
ELECTRICAL DEVICE USE WITH THE WELDMARK 225.

Type	Common Electrical Devices	Possible Concerns
Resistive	Heaters, toasters, incandescent light bulbs, electric range, hot pan, skillet, coffee maker.	NONE
Capacitive	TV sets, radios, microwaves, appliances with electrical control.	Voltage spikes or high voltage regulation can cause the capacitative elements to fail. Surge protection, transient protection, and additional loading is recommended for 100% fail-safe operation. **DO NOT RUN THESE DEVICES WITHOUT ADDITIONAL RESISTIVE TYPE LOADS.**
Inductive	Single-phase induction motors, drills, well pumps, grinders, small refrigerators, weed and hedge trimmers	These devices require large current inrush for starting. Some synchronous motors may be frequency sensitive to attain maximum output torque, but they SHOULD BE SAFE from any frequency induced failures.
Capacitive/Inductive	Computers, high resolution TV sets, complicated electrical equipment.	An inductive type line conditioner along with transient and surge protection is required, and liabilities still exist. **DO NOT USE THESE DEVICES WITH A WELDMARK 225**

The Lincoln Electric Company is not responsible for any damage to electrical components improperly connected

AUXILIARY POWER WHILE WELDING

Simultaneous welding and power loads are permitted by following Table I. The permissible currents shown assume that current is being drawn from either the 120V or 240V supply (not both at the same time). Also, the "Output Control" is set at "10" for maximum auxiliary power.

TABLE I
SIMULTANEOUS WELDING AND POWER

Output Selector Setting	Permissible Power Watts (Unity Power Factor)	Permissible Auxiliary Current in Amperes @ 120V *-or- @ 240V	
Max. Stick or Wire Feed Setting	None	0	0
145 Stick Setting	3450	32	16
90 Stick Setting	6000	50**	25
NO WELDING	9000	76**	38

* Each duplex receptacle is limited to 20 amps.

** Not to exceed 40A per 120VAC branch circuit when splitting the 240 VAC output.

STANDBY POWER CONNECTIONS

The WELDMARK 225 is suitable for temporary, stand-by, or emergency power using the engine manufacturer's recommended maintenance schedule.

The WELDMARK 225 can be permanently installed as a standby power unit for 240V-3 wire, single phase 38 ampere service.

⚠ WARNING

(Connections must be made by a licensed electrician who can determine how the 120/240V power can be adapted to the particular installation and comply with all applicable electrical codes.) The following information can be used as a guide by the electrician for most applications (refer also to the connection diagram shown in Figure 1.)

---

1. Install a double pole, double throw switch between the power company meter and the premises disconnect.

   Switch rating must be the same or greater than the customer's premises disconnect and service overcurrent protection.

2. Take necessary steps to assure load is limited to the capacity of the WELDMARK 225 by installing a 38 amp 240V double pole circuit breaker. Maximum rated load for the 240V auxiliary is 38 amperes. Loading above 38 amperes will reduce output voltage below the allowable -10% of rated voltage which may damage appliances or other motor-driven equipment.

3. Install a 50 amp 120/240V plug (NEMA type 14-50) to the Double Pole Circuit Breaker using No. 8, 4 conductor cable of the desired length. (The 50 amp 120/240V plug is available in the optional plug kit.)

4. Plug this cable into the 50 amp 120/240V receptacle on the WELDMARK 225 case front.

Figure 1

CONNECTION OF WELDMARK 225 TO PREMISES WIRING

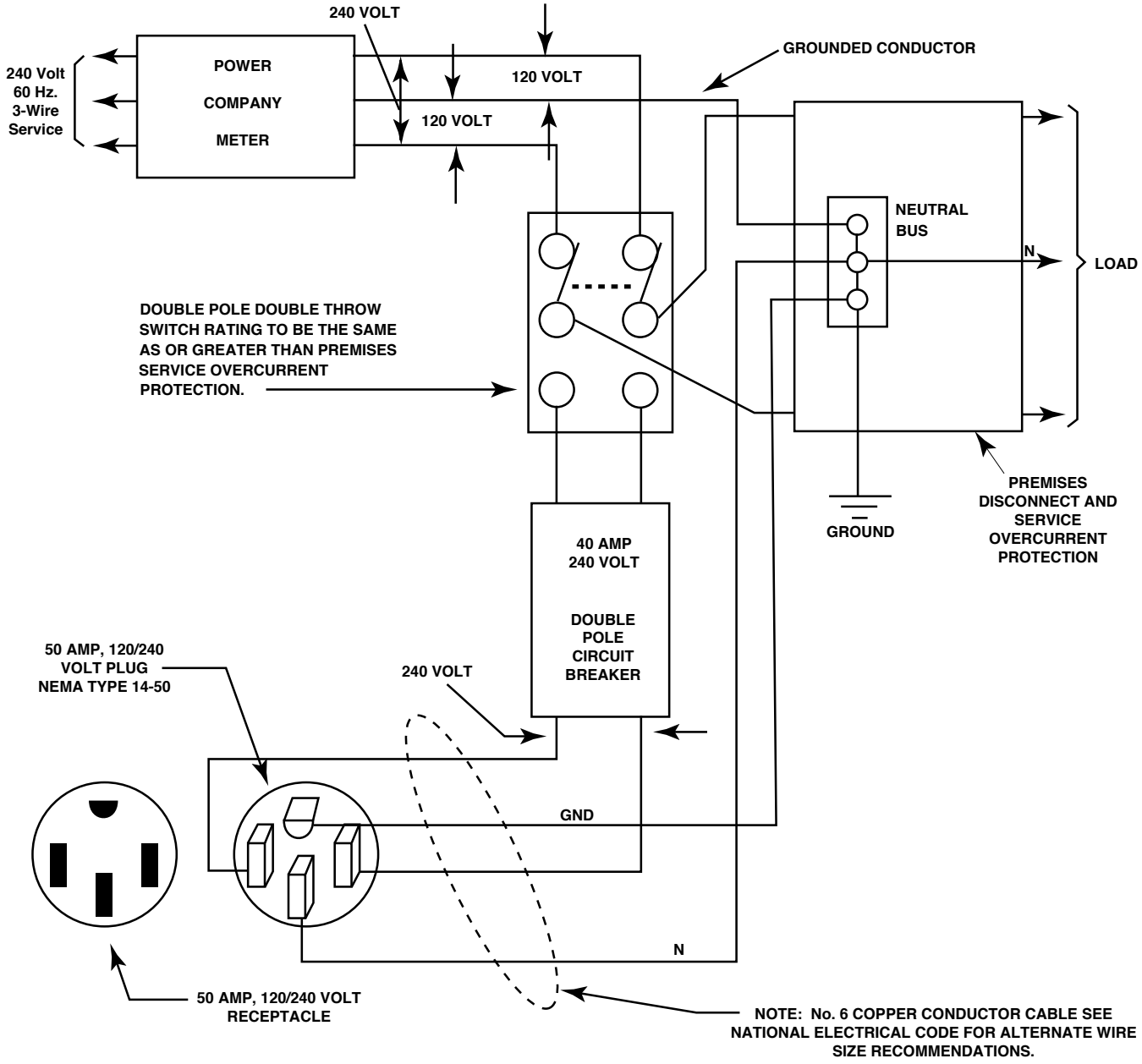

⚠ WARNING

Connection of WELDMARK 225 to premises wiring must be done by a licensed electrician and must comply with the National Electrical Code and all other applicable electrical codes.

SAFETY PRECAUTIONS

Do not attempt to use this equipment until you have thoroughly read the engine manufacturer's manual supplied with your welder. It includes important safety precautions, detailed engine starting, operating and maintenance instructions, and parts lists.

ELECTRIC SHOCK can kill.
- **Do not touch electrically live parts or electrode with skin or wet clothing.**
- **Insulate yourself from work and ground**
- **Always wear dry insulating gloves.**

- **Always operate the welder with the hinged door closed and the side panels in place.**

- **Read carefully the Safety Precautions page before operating this machine. Always follow these and any other safety procedures included in this manual and in the Engine Instruction Manual.**

GENERAL DESCRIPTION

The WELDMARK 225 is a twin-cylinder, gasoline driven, multiprocess arc welder and AC power generator. It is built in a heavy gauge steel case for durability on the job site.

WELDER CONTROLS - FUNCTION AND OPERATION

ENGINE SWITCH

The engine switch is used to Start the Engine, Select High Idle or Auto Idle while the engine is running, and stop the Engine.

When placed in the "OFF" position, the ignition circuit is de-energized to shut down the engine.

When held in the "START" position, the engine starter motor is energized.

When in "HIGH IDLE" ( ) position, the engine will run continuously at high idle.

When in "AUTO IDLE" (/) position, the engine will run continuously and the idler operates as follows:

- Welding

  When the electrode touches the work, the welding arc is initiated and the engine accelerates to full speed.

  After welding ceases (and no auxiliary power is being drawn), the engine will return to low idle after approximately 10 to 14 seconds.

- Auxiliary Power

  With the engine running at low idle and auxiliary power for lights or tools is drawn (approximately 100-150 watts or greater) from the receptacles, the engine will accelerate to high speed. If no power is being drawn from the receptacles (and not welding) for 10-14 seconds, the idler reduces the engine speed to low idle.

"RANGE" SWITCH

The "Range" switch is used to select one of three amperage ranges with generous overlap for Stick/TIG welding, or one Wire Feed welding range.

Process	Range Setting	Current Range
STICK/TIG (constant current) (3 range settings)	90 Max. 145 Max. 210DC/225AC Max.	40 to 90 Amps 70 to 145 Amps 120 to 210 (DC) 225(AC)
WIRE FEED (constant voltage) (one range setting)	15 to 25V	Up to 200 Amps

⚠ CAUTION

Never change the "RANGE" Switch setting while welding. This will damage the switch.

" CONTROL" DIAL

Provides a fine welding current adjustment within the Range Switch settings in the STICK mode and welding voltage control with the Range switch set in the wire feed mode.

POLARITY SWITCH

Provides three selectable welding polarities:
AC, DC+ & DC-

⚠ CAUTION

Never change the Polarity switch setting while welding. This will damage the switch.

WELDMARK 225 APPROXIMATE FUEL CONSUMPTION

	KOHLER 23 H.P. COMMAND
Low Idle - No Load 2200 RPM	.4 Gallons/Hour (1.5 Liters/Hour)
High Idle - No Load 3700 RPM	.7 Gallons/Hour (2.8 Liters/Hour)
AC CC Weld Output 225 Amps @ 25 Volts	1.2 Gallons/Hour (4.6 Liters/Hour)
DC CC Weld Output 210 Amps @ 25 Volts	1.3 Gallons/Hour (4.9 Liters/Hour)
DC CV Weld Output 200 Amps @ 20 Volts	1.2 Gallons/Hour (4.5 Liters/Hour)
Auxiliary Power 9000 Watts	1.4 Gallons/Hour) (5.3 Liters/Hour)

STARTING/SHUTDOWN INSTRUCTIONS

STARTING THE ENGINE

⚠ WARNING

- **Do not touch electrically live parts of electrode with skin or wet clothing.**

- **Keep flammable material away.**

- **Insulate yourself from work and ground. Wear eye, ear, and body protection.**

- **Keep your head out of the fumes.**
- **Use ventilation or exhaust to remove fumes from breathing zone.**

Be sure all Pre-Operation Maintenance has been performed. Also, read the Engine Owner's Manual before starting for the first time.

Remove all loads connected to the AC power receptacles. Use the choke control as follows:

KOHLER ENGINE - **Always** pull the choke control out when starting the engine; cold, warm or hot.

Turn the engine switch to the "start" position and crank the engine until it starts. Release the switch as soon as the engine starts, slowly return the choke control to the full "in" position (choke open), and turn the switch to the Auto Idle(/) position. Do not turn the switch to the "start" position while the engine is running because this will cause damage to the ring gear and/or starter motor

After running at high engine speed for 10-14 seconds, the engine will go to low idle.
Allow the engine to warm up by letting it run at low idle for a few minutes.

STOPPING THE ENGINE

Remove all welding and auxiliary power loads and allow engine to run at low idle speed for a few minutes to cool the engine.

Stop the engine by placing the Engine switch in the "OFF" position.

A fuel shut off valve is not required on the WELDMARK 225 because the fuel tank is mounted below the engine.

BREAK-IN PERIOD

It is normal for any engine to use a greater amount of oil until the break-in is accomplished. Check the oil level twice a day during the break-in period (approximately 50 running hours).

IMPORTANT: IN ORDER TO ACCOMPLISH THIS BREAK-IN, THE UNIT SHOULD BE SUBJECTED TO MODERATE LOADS, WITHIN THE RATING OF THE MACHINE. AVOID LONG IDLE RUNNING PERIODS. REMOVE LOADS AND ALLOW ENGINE TO COOL BEFORE SHUTDOWN.

The engine manufacturer's recommendation for the running time until the first oil change is as follows:

KOHLER CH23S	5 HRS

The oil filter is to be changed at the second oil change. Refer to the Engine Owner's Manual for more information.

WELDING PROCESS

For any electrodes the procedures should be kept within the rating of the machine. For electrode information see the appropriate Lincoln publication.

STICK (CONSTANT CURRENT) WELDING

Connect welding cables to the "TO WORK" and "ELECTRODE" studs. Start the engine. Set the "Polarity" switch to the desired polarity. The "RANGE" switch markings indicate the maximum current for that range as well as the typical electrode size for that range. The "OUTPUT" Control provides fine adjustment of the welding current within the select range. For maximum output within a selected range set the "OUTPUT" Control at 10. For minimum output within a selected range set the "OUTPUT" Control at 5. ("OUTPUT" Control settings below 5 may reduce arc stability) For best overall welding performance set the "RANGE" Switch to the lowest setting and the OUTPUT" Control near the maximum to achieve the desired welding current.

RANGE SETTING	TYPICAL ELECTRODE SIZE	CURRENT RANGE
90 MAX.	3/32	40 TO 90 AMPS
125 MAX.	1/8	70 TO 145 AMPS
210(DC)/225(AC) MAX.	5/32	120 TO 210(DC), 225(AC) AMPS

The WELDMARK 225 can be used with a broad range of AC and DC stick electrodes. See "Welding Tips 1" included with the WELDMARK 225 for electrodes within the rating of this unit and recommended welding currents of each.

TIG (CONSTANT CURRENT) WELDING

The K930-[ ] TIG Module installed on a Weldmark 225 provides high frequency and shielding gas control for AC and DC GTAW (TIG) welding processes. The TIG Module allows full range output control. After flow time is adjustable from 0 to 55 seconds.

When using the Weldmark 225 for AC TIG welding of aluminum, the following settings and electrodes are recommended:

SETTINGS FOR PURE TUNGSTEN		
TUNGSTEN DIAMETER (in.)	RANGE SWITCH SETTINGS	APPROXIMATE CURRENT RANGE
1/8	90 or 145	80 - 150 Amps
3/32	90 or 145	45 - 130 Amps
1/16	90	40 - 80 Amps

SETTINGS FOR 1% THORIATED TUNGSTEN		
TUNGSTEN DIAMETER (in.)	RANGE SWITCH SETTINGS	APPROXIMATE CURRENT RANGE
1/8	90, 145, or 210	80 - 225 Amps
3/32	90 or 145	50 - 180 Amps
1/16	90 or 145	45 - 120 Amps

The K930-[ ] TIG Module should be used with the WELDMARK 225 on high idle to maintain satisfactory operation. It can be used in the AUTO position but the delay going to flow idle after welding is ceased will be increased if the AFTER FLOW CONTROL is set above 10 seconds.

WIRE FEED WELDING PROCESSES (CONSTANT VOLTAGE)

The Innershield® electrode recommended for use with the WELDMARK 225 is NR®-211-MP. The electrode sizes and welding ranges that can be used with the WELDMARK 225 are shown in the following table:

Diameter (in.)	Wire Speed Range In./Min.	Approximate Current Range
.035	80 - 110	75A to 120A
.045	70 - 130	120A to 170A
.068	40 - 90	125A to 210A

The WELDMARK 225 is recommended for limited "MIG" welding (GMAW - gas metal arc welding). The recommended electrodes are .030" and .035" L-50 and L-56. They must be used with a blended shielding gas such as C25 (75% Argon - 25% CO_2). The welding ranges that can be used with the WELDMARK 225 are shown in the following table:

Diameter (in.)	Wire Speed Range In./Min.	Approximate Current Range
.030	80 - 110	75A to 120A
.035	70 - 130	120A to 170A

ARC GOUGING

The Weldmark 225 can be used for limited arc gouging.

Set the Range switch to adjust output current to the desired level for the gouging electrode being used according to the ratings in the following table:

ELECTRODE DIAMETER	CURRENT RANGE (DC, electrode positive)
1/8	60 - 90 Amps
5/32	90 - 150 Amps
3/16	200 - 250 Amps

SUMMARY OF WELDING PROCESSES

PROCESS	CONTROL CABLE USED	IDLE MODE	ELECTRODE WHEN NOT WELDING	TO START WELDING
STICK	No	AUTO	Hot	Touch electrode to work. Welding starts immediately and engine goes to high idle.
WIRE FEED, LN-15 ACROSS the ARC (has internal contactor)	No	AUTO	Cold	Press gun trigger. LN-15 contactor closes, Welding starts immediately **Note**: Output Control must be set above “3”.
WIRE FEED, LN-25 WITH INTERNAL CONTACTOR	No	AUTO	Cold	Press gun trigger, LN-25 contactor closes. Welding starts immediately and engine goes to high idle. NOTE: Output Control must be set above “3”
TIG, TIG MODULE WITH WITH CONTACTOR KIT CONTROL CABLE, & ARC START SWITCH	Yes	auto	Cold	Press Arc Start Switch contactor closes, welding starts immediately.

OPTIONAL EQUIPMENT (Field Installed)

K957-1 Heavy Duty, Two Wheel Trailer For Small Welders - For road, off-road and in-plant and yard towing. (For highway use, consult applicable federal, state and local laws regarding requirements for brakes, lights, fenders, etc.)

Order K957-1 Trailer
K958-1 Ball Hitch
K958-2 Lunette Eye Hitch
K959-2 Fender & Light Kit
K965-1 Cable Storage Rack

K889-2 & -3 Two-Wheel Undercarriage - For moving by hand. Overall Width 29in.(.74m). Both have pneumatic tires. Puncture proof tires included with K889-3.

K1737-1 Four Wheel All-Terrain Undercarriage - For moving by hand at construction sites. Heavy duty puncture resistant pneumatic tires.

K1770-1 Undercarriage (Factory) - For moving by hand on a smooth surface. One or two gas cylinders can be mounted on the rear of the undercarriage with the installation of K1745-1 Cylinder Holder(s). Heavy duty puncture resistant pneumatic tires and front caster.

K1745-1 Welding Gas Cylinder LPG Tank Holder - Holds Welding Gas Cylinder for use on K1770-1 Undercarriage. One or two may be installed on an undercarriage.

K1788-1 Roll Cage - Gives added damage protection. Attaches to K1737-1, K1770-1, and K957-1.

K886-1 Canvas Cover -To protect the WELDMARK 225 when not in use. Made from attractive red canvas material which is flame retardant, mildew resistant, and water repellent.

K802R Power Plug Kit- provides four 120V plugs rated at 15 amps each and one dual voltage, Full KVA plug rated at 120/240V, 50 amps.

K802N Power Plug Kit - Provides four 120V plugs rated at 20 amps each and one dual voltage, full KVA plug rated at 120/240V, 50 amps.

K704 Accessory Kit - For Stick welding. Includes 35 ft (10.7m) 2/0 AWG electrode cable, 30 ft. (9.1m) 2/0 AWG work cable with lugs, headshield, Filter plate, work clamp and electrode holder. 400 amp capacity.

K875 Accessory Kit - For Stick welding. Includes 20 ft (6.1m) #6 electrode cable with lugs, 15 ft. (4.6m) #6 work cable with lugs, headshield, Filter plate, work clamp and electrode holder and sample pack of mild steel electrode. 150 amp capacity.

K894-1 Spark Arrester Kit - Includes a heavy gauge steel, approved spark arrester and clamp for easy mounting to muffler exhaust pipe.

K1690-1 GFCI Receptacle Kit - Includes one UL approved120V ground fault circuit interrupter duplex type receptacle with cover and installation instructions. Replaces the factory installed 120V duplex receptacle. Each receptacle of the GFCI Duplex is rated at 20 Amps, the maximum total current from the GFCI Duplex is limited to the 20 Amps. Two kits are required.

K1816-1 Full KVA Adapter Kit - Plugs into the 120/240V NEMA 14-50R receptacle on the case front (which accepts 4-prong plugs) and converts it to a NEMA 6-50R receptacle, (which accepts 3-prong plugs.)

T12153-9 Full-KVA Power Plug - One dual voltage plug rated at 120/240V, 50 amps.

K930-2 TIG Module - Provides high frequency and shielding gas control.for AC and DC GTAW (TIG) welding applications. Its compact case is designed foe easy carrying, complete with a handle. High frequency bypass is built in.
Requires K938-1 Contactor Kit, K936-4 Control Cable, and K814 Arc Start Switch.

K938-1 Contactor Kit - For use with TIG Module, Provides a “cold” electrode until the triggering device (Arc Start Switch) is pressed.

K936-4 Control Cable - Connects TIG Module to Weldmark 225.

K814 Arc Start Switch - Attaches to the TIG torch for convenient finger control.

K937-45 Control Cable Extension - Allows TIG Module to be operated at distances up to 200ft. from the power source. Available in 45ft. (13.7m).

K939-1 Docking Kit - For Mounting the K930-2 TIG Module on top of the Weldmark 225.

RECOMMENDED EQUIPMENT

STICK

K704 or K875 Accessory Kit
(See Accessory page C-1 for items included in Kit.)

WIRE FEED

K449 LN-25 - Includes internal contactor for across the arc operation (no control cable). Provides “cold” electrode until gun trigger is pressed. Includes gas solenoid.

Magnum Gun and Magnum Gun Connector Kit are required for gas-shielded welding. Innershield Gun is required for gasless welding.

TIG

PRO Torch® TIG Torch
K1787-9 PTA-26V TIG Torch

Magnum Parts Kit and Argon Gas

K930-2 TIG Module
Requires K938-1 Contactor Kit,
K936-4 Control Cable, and K814
Arc Start Switch

Optional TIG Equipment:

K939-1 Docking Kit
K937-45 Control Cable Extensions

SAFETY PRECAUTIONS

⚠ WARNING

Have qualified personnel do the maintenance work. Turn the engine off before working inside the machine. In some cases, it may be necessary to remove safety guards to perform required maintenance. Remove guards only when necessary and replace them when the maintenance requiring their removal is complete. Always use the greatest care when working near moving parts.

Do not put your hands near the engine cooling blower fan. If a problem cannot be corrected by following the instructions, take the machine to the nearest Lincoln Field Service Shop.

ELECTRIC SHOCK can kill.
- **Do not touch electrically live parts or electrode with skin or wet clothing.**
- **Insulate yourself from work and ground**
- **Always wear dry insulating gloves.**

ENGINE EXHAUST can kill.
- **Use in open, well ventilated areas or vent exhaust outside.**

MOVING PARTS can injure.
- **Do not operate with doors open or guards off.**
- **Stop engine before servicing.**
- **Keep away from moving parts.**

See additional warning information throughout this operator's manual and the Engine manual as well.

Read the Safety Precautions in the front of this manual and the engine instruction manual before working on this machine.

Keep all equipment safety guards, covers, and devices in position and in good repair. Keep hands, hair, clothing, and tools away from gears, fans, and all other moving parts when starting, operating, or repairing the equipment.

ROUTINE MAINTENANCE

- At the end of each day's use, refill the fuel tank to minimize moisture condensation in the tank. Running out of fuel tends to draw dirt into the fuel system. Also, check the crankcase oil level and add oil if indicated.

⚠ CAUTION

Make certain that the oil filler cap is securely tightened after checking or adding oil. If the cap is not tight, oil consumption can increase significantly which may be evidenced by white smoke coming from the exhaust.

- OIL - Maintenance schedule for changing the oil and oil filter after break-in **:**

	Kohler CH23S
Oil	100 Hrs.
Oil Filter	200 Hrs.

The above schedule is for normal operating conditions. More frequent oil changes are required with dusty, high temperature and other severe operating conditions. Refer to the maintenance section of the Engine Owner's Manual for more information.

NOTE: Engine life will be reduced if the oil and oil filter are not changed according to the manufacturer's recommendation.

ENGINE OIL CHANGE

Drain the oil while the engine is warm to assure rapid and complete draining.

- Remove the oil filler cap and dipstick. Remove the yellow cap from the oil drain valve and attach the flexible drain tube supplied with the machine. Push in and twist the drain valve counterclockwise. Pull the valve out and drain the oil into a suitable container.

- Close the drain valve by pushing in and twisting clockwise. Replace the yellow cap.

- Refill to the upper limit mark on the dipstick with the recommended oil. Tighten the oil filler cap securely.

ENGINE OIL REFILL CAPACITIES

Without oil filter replacement:
- 1.7qt. (1.6 liter)-Kohler

With oil filter replacement:
- 2.0qt. (1.9 liter)-Kohler

Use 4-stroke motor oil that meets or exceeds the requirements for API service classification SG or SH. Always check the API SERVICE label on the oil container to be sure it includes the letters SG or SH.

SAE 10W-30 is recommended for general, all-temperature use, -5 F to 104 F (-20 C to 40 C).

See Engine Owner's Manual for more specific information on oil viscosity recommendations.

Wash your hands with soap and water after handling used oil.

Please dispose of used motor oil in a manner that is compatible with the environment. We suggest you take it in a sealed container to your local service station or recycling center for reclamation.

Do not throw it in the trash, pour it on the ground or down a drain.

OIL FILTER CHANGE

1. Drain the engine oil.
2. Remove the oil filter, and drain the oil into a suitable container. Discard the used oil filter.
3. Clean the filter mounting base, and coat the gasket of the new oil filter with clean engine oil.
4. Screw on the new oil filter by hand, until the gasket contacts the filter mounting base, then use an oil filter socket tool to tighten the filter an additional 1/2 to 7/8 turn.
5. Refill the crankcase with the specified amount of the recommended oil. Reinstall the oil filler cap.
6. Start the engine and check for oil filter leaks.
7. Stop the engine, and check the oil level. If necessary, add oil to the upper limit mark on the dipstick.

AIR CLEANER AND OTHER MAINTENANCE

- Air Cleaner - With normal operating conditions, the maintenance schedule for cleaning and re-oiling the foam pre-filter is every 25 hours and replacement of the air cleaner filter every 100 hours. More frequent servicing is required with dusty operating conditions. Refer to the maintenance section of the Engine Owner's Manual for more information.
- Refer to the maintenance section of the Engine Owner's Manual for the maintenance schedule, spark plug servicing, cooling system servicing, and fuel filter replacement.
- Blow out the machine with low pressure air periodically. In particularly dirty locations, this may be required once a week.
- Output Range Selector and Polarity Switches: Switch contacts should not be greased. To keep contacts clean, rotate the switch through its entire range frequently. Good practice is to turn the handle from maximum to minimum setting twice each morning before starting to weld.

ENGINE ADJUSTMENTS

OVERSPEED IS HAZARDOUS

⚠ WARNING

The maximum allowable high idle speed for this machine is 3750 RPM, no load. Do NOT tamper with governor components or setting or make any other adjustments to increase the maximum speed. Severe personal injury and damage to the machine can result if operated at speeds above maximum.

Adjustments to the engine are to be made only by an authorized Field Service Shop.

SLIP RINGS

A slight amount of darkening and wear of the slip rings and brushes is normal. Brushes should be inspected when a general overhaul is necessary. If brushes are to be replaced, clean slip rings with a fine emery paper.

⚠ CAUTION

Do not attempt to polish slip rings while engine is running.

BATTERY

⚠ WARNING

GASES FROM BATTERY can explode.

- **Keep sparks, flame and cigarettes away from battery.**

To prevent EXPLOSION when:

- **INSTALLING A NEW BATTERY - disconnect negative cable from old battery first and connect to new battery last.**

- **CONNECTING A BATTERY CHARGER - Remove battery from welder by disconnecting negative cable first, then positive cable and battery clamp. When reinstalling, connect negative cable last. Keep well ventilated.**

- **USING A BOOSTER - connect positive lead to battery first then connect negative lead to engine foot.**

- **BATTERY ACID CAN BURN EYES AND SKIN.- Wear gloves and eye protection and be careful when working near battery. Follow instructions printed on battery.**

---

1. When replacing, jumping, or otherwise connecting the battery to the battery cables, the proper polarity must be observed. Failure to observe the proper polarity could result in damage to the charging circuit. The positive (+) battery cable has a red terminal cover.

2. If the battery requires charging from an external charger, disconnect the negative battery cable first and then the positive battery cable before attaching the charger leads. Failure to do so can result in damage to the internal charger components. When reconnecting the cables, connect the positive cable first and the negative cable last.

HARDWARE

Both English and Metric fasteners are used in this welder.

ENGINE MAINTENANCE PARTS

	KOHLER C23S
Oil Filter	KOHLER 12 050 01 FRAM PH8172*
Air Filter Element	KOHLER 47 083 03 FRAM CA79
Air Filter Pre-Cleaner	KOHLER 24 083 02
Fuel Filter	KOHLER 24 050 10
SparkPlugs (Resistor Type)	CHAMPION RC12YC (.030” GAP)

* Oil capacity increases from 2.0 Qts. to 2.1 Qts. when using this filter.

HOW TO USE TROUBLESHOOTING GUIDE

⚠ WARNING

Service and Repair should only be performed by Factory Trained Personnel. Unauthorized repairs performed on this equipment may result in danger to the technician and machine operator and will invalidate your factory warranty. For your safety and to avoid Electrical Shock, please observe all safety notes and precautions detailed throughout this manual.

This Troubleshooting Guide is provided to help you locate and repair possible machine malfunctions. Simply follow the three-step procedure listed below.

Step 1. LOCATE PROBLEM (SYMPTOM).
Look under the column labeled “PROBLEM (SYMPTOMS)”. This column describes possible symptoms that the machine may exhibit. Find the listing that best describes the symptom that the machine is exhibiting.

Step 2. POSSIBLE CAUSE.
The second column labeled “POSSIBLE CAUSE” lists the obvious external possibilities that may contribute to the machine symptom.

Step 3. RECOMMENDED COURSE OF ACTION
This column provides a course of action for the Possible Cause, generally it states to contact your local Authorized Field Service Facility.

If you do not understand or are unable to perform the Recommended Course of Action safely, contact your local Authorized Field Service Facility.

⚠ CAUTION

If for any reason you do not understand the test procedures or are unable to perform the tests/repairs safely, contact your **Local Authorized Field Service Facility** for technical troubleshooting assistance before you proceed.

Observe all Safety Guidelines detailed throughout this manual

PROBLEMS (SYMPTOMS)	POSSIBLE CAUSE	RECOMMENDED COURSE OF ACTION
No welder or output power.	1. Open in miscellaneous leads. 2. Open lead in flashing or field circuit. 3. Faulty rotor. 4. Faulty Potentiometer (R1). 5. Faulty stator Field winding. 6. Faulty Field rectifier (D2). 7. Faulty P.C. Board.	If all recommended possible areas of misadjustment have been checked and the problem persists, **Contact your local Authorized Field Service Facility.**
Engine will not idle down to low speed.	1. Idler switch on High Idle. 2. Insufficient voltage present between terminals #213 and #5E. (Voltage should be 12V DC). 3. External load on welder or auxiliary power. 4. Faulty wiring in solenoid circuit. 5. Faulty idler solenoid. 6. Faulty P.C. Board.	
Engine will not go to high idle when attempting to weld.	1. Poor work lead connection to work. 2. No voltage signal from the current sensor. 3. No open circuit voltage on output studs. 4. Faulty P.C. Board.	

⚠ CAUTION

If for any reason you do not understand the test procedures or are unable to perform the tests/repairs safely, contact your **Local Authorized Field Service Facility** for technical troubleshooting assistance before you proceed.

Observe all Safety Guidelines detailed throughout this manual

PROBLEMS (SYMPTOMS)	POSSIBLE CAUSE	RECOMMENDED COURSE OF ACTION
Engine will not go to high idle when using auxiliary power.	1. No voltage signal from the current sensor. 2. Auxiliary power load less than 100 to 150 watts. 3. Faulty P.C. Board.	If all recommended possible areas of misadjustment have been checked and the problem persists, **Contact your local Authorized Field Service Facility.**
Engine will not crank or is hard to crank.	1. Battery will not hold a charge. Faulty Battery. 2. No or insufficient charging current. 3. Loose battery cable connection(s).	
Engine shuts down.	1. Out of fuel. 2. Low oil level.	
Engine does not develop full power.	1. Fuel filter clogged. 2. Air filter clogged.	
Engine is hard to start.	1. Spark plugs do not have specified gap. 2. Spark plugs are fouled.	

⚠ CAUTION

If for any reason you do not understand the test procedures or are unable to perform the tests/repairs safely, contact your **Local Authorized Field Service Facility** for technical troubleshooting assistance before you proceed.

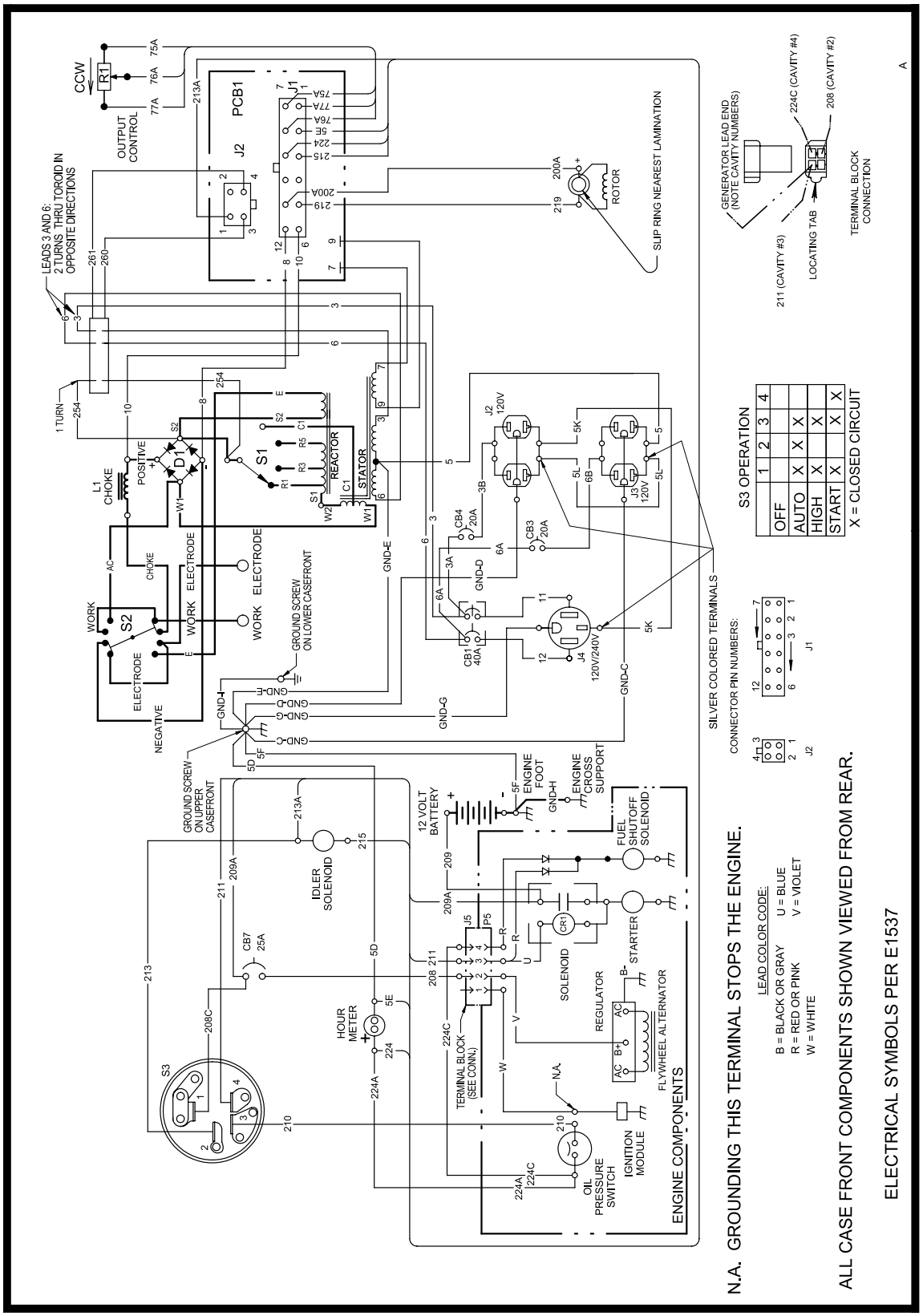

NOTE: This diagram is for reference only. It may not be accurate for all machines covered by this manual. The specific diagram for a particular code is pasted inside the machine on one of the enclosure panels. If the diagram is illegible, write to the Service Department for a replacement. Give the equipment code number.

WELDMARK 225/ LN-15 AND LN-25 ACROSS THE ARC CONNECTION DIAGRAM

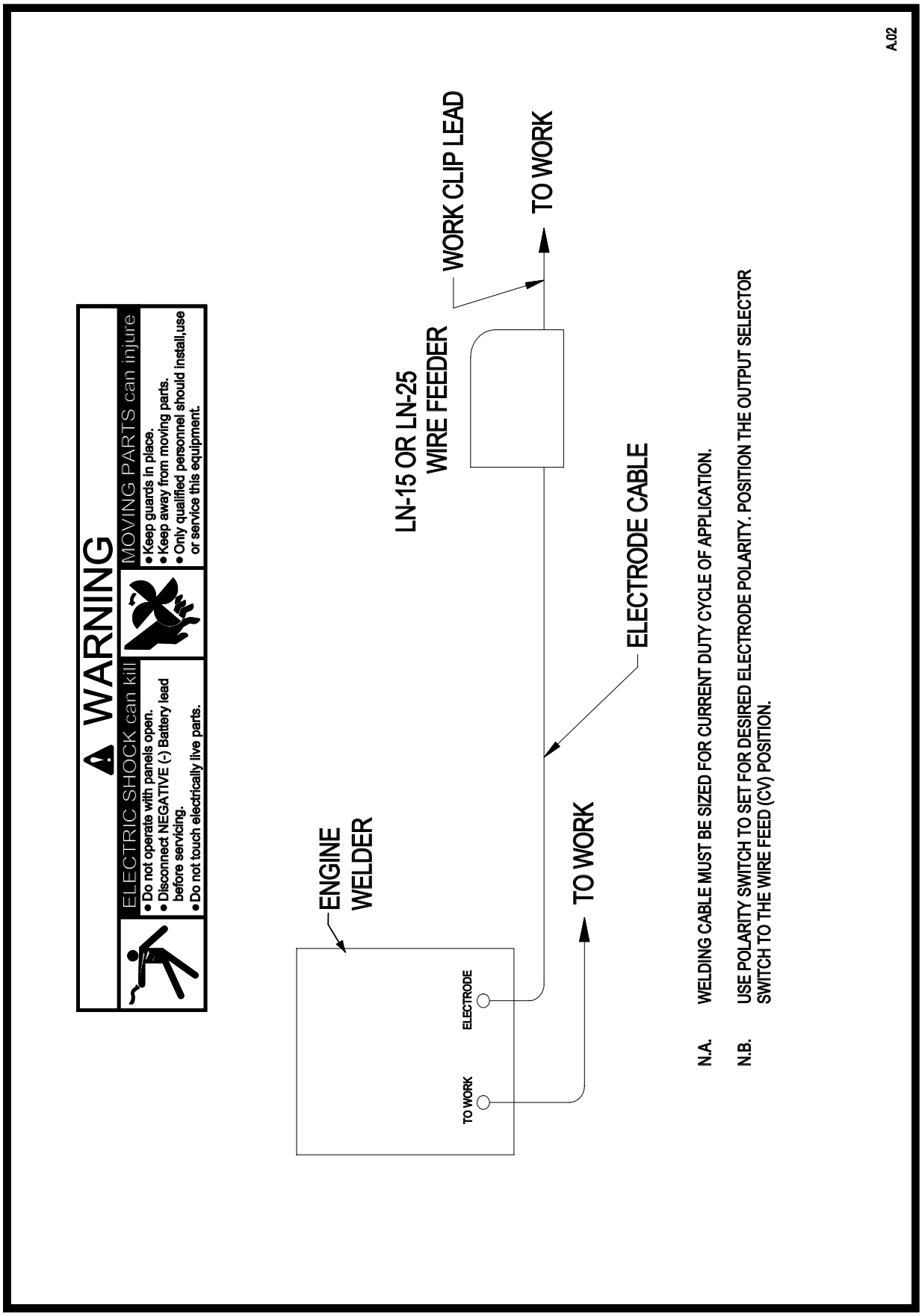

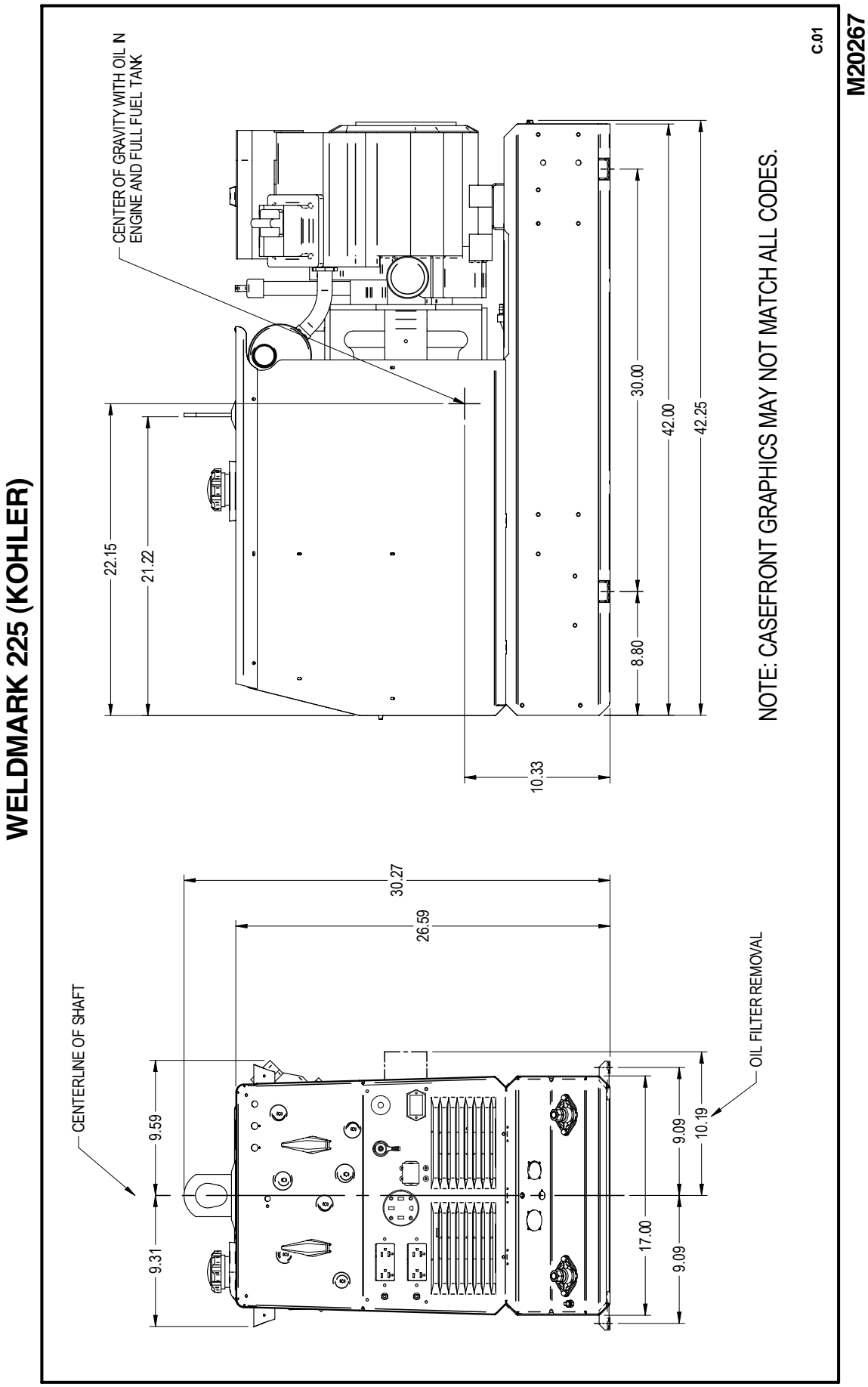
WELDMARK 225 (KOHLER)
CENTER OF GRAVITY WITH OIL IN ENGINE AND FULL FUEL TANK
22.15
21.22
10.33
8.80
30.00
42.00
42.25
NOTE: CASEFRONT GRAPHICS MAY NOT MATCH ALL CODES.
C.01
M20267
30.27
26.59
CENTERLINE OF SHAFT
9.59
9.31
17.00
9.09
9.09
10.19
OIL FILTER REMOVAL

WARNING	● Do not touch electrically live parts or electrode with skin or wet clothing. ● Insulate yourself from work and ground.	● Keep flammable materials away.	● Wear eye, ear and body protection.
Spanish **AVISO DE PRECAUCION**	● No toque las partes o los electrodos bajo carga con la piel o ropa mojada. ● Aislese del trabajo y de la tierra.	● Mantenga el material combustible fuera del área de trabajo.	● Protéjase los ojos, los oídos y el cuerpo.
French **ATTENTION**	● Ne laissez ni la peau ni des vêtements mouillés entrer en contact avec des pièces sous tension. ● Isolez-vous du travail et de la terre.	● Gardez à l'écart de tout matériel inflammable.	● Protégez vos yeux, vos oreilles et votre corps.
German **WARNUNG**	● Berühren Sie keine stromführenden Teile oder Elektroden mit Ihrem Körper oder feuchter Kleidung! ● Isolieren Sie sich von den Elektroden und dem Erdboden!	● Entfernen Sie brennbarres Material!	● Tragen Sie Augen-, Ohren- und Körperschutz!
Portuguese **ATENÇÃO**	● Não toque partes elétricas e electrodos com a pele ou roupa molhada. ● Isole-se da peça e terra.	● Mantenha inflamáveis bem guardados.	● Use proteção para a vista, ouvido e corpo.
Japanese **注意事項**	● 通電中の電気部品、又は溶材にヒフやぬれた布で触れないこと。 ● 施工物やアースから身体が絶縁されている様にして下さい。	● 燃えやすいものの側での溶接作業は絶対にしてはなりません。	● 目、耳及び身体に保護具をして下さい。
Chinese **警 告**	● 皮肤或濕衣物切勿接觸帶電部件及銲條。 ● 使你自己與地面和工件絶緣。	● 把一切易燃物品移離工作場所。	● 佩戴眼、耳及身體勞動保護用具。
Korean **위 험**	● 전도체나 용접봉을 젖은 헝겁 또는 피부로 절대 접촉치 마십시요. ● 모재와 접지를 접촉치 마십시요.	● 인화성 물질을 접근 시키지 마시요.	● 눈, 귀와 몸에 보호장구를 착용하십시요.
Arabic **تحذير**	● لا تلمس الاجزاء التي يسري فيها التيار الكهربائي أو الالكترود بجلد الجسم أو بالملابس المبللة بالماء. ● ضع عازلا على جسمك خلال العمل.	● ضع المواد القابلة للاشتعال في مكان بعيد.	● ضع أدوات وملابس واقية على عينيك وأذنيك وجسمك.

READ AND UNDERSTAND THE MANUFACTURER'S INSTRUCTION FOR THIS EQUIPMENT AND THE CONSUMABLES TO BE USED AND FOLLOW YOUR EMPLOYER'S SAFETY PRACTICES.

SE RECOMIENDA LEER Y ENTENDER LAS INSTRUCCIONES DEL FABRICANTE PARA EL USO DE ESTE EQUIPO Y LOS CONSUMIBLES QUE VA A UTILIZAR, SIGA LAS MEDIDAS DE SEGURIDAD DE SU SUPERVISOR.

LISEZ ET COMPRENEZ LES INSTRUCTIONS DU FABRICANT EN CE QUI REGARDE CET EQUIPMENT ET LES PRODUITS A ETRE EMPLOYES ET SUIVEZ LES PROCEDURES DE SECURITE DE VOTRE EMPLOYEUR.

LESEN SIE UND BEFOLGEN SIE DIE BETRIEBSANLEITUNG DER ANLAGE UND DEN ELEKTRODENEINSATZ DES HERSTELLERS. DIE UNFALLVERHÜTUNGSVORSCHRIFTEN DES ARBEITGEBERS SIND EBENFALLS ZU BEACHTEN.

● Keep your head out of fumes. ● Use ventilation or exhaust to remove fumes from breathing zone.	● Turn power off before servicing.	● Do not operate with panel open or guards off.	**WARNING**
● Los humos fuera de la zona de respiración. ● Mantenga la cabeza fuera de los humos. Utilice ventilación o aspiración para gases.	● Desconectar el cable de alimentación de poder de la máquina antes de iniciar cualquier servicio.	● No operar con panel abierto o guardas quitadas.	Spanish **AVISO DE PRECAUCION**
● Gardez la tête à l'écart des fumées. ● Utilisez un ventilateur ou un aspirateur pour ôter les fumées des zones de travail.	● Débranchez le courant avant l'entretien.	● N'opérez pas avec les panneaux ouverts ou avec les dispositifs de protection enlevés.	French **ATTENTION**
● Vermeiden Sie das Einatmen von Schweibrauch! ● Sorgen Sie für gute Be- und Entlüftung des Arbeitsplatzes!	● Strom vor Wartungsarbeiten abschalten! (Netzstrom völlig öffnen; Maschine anhalten!)	● Anlage nie ohne Schutzgehäuse oder Innenschutzverkleidung in Betrieb setzen!	German **WARNUNG**
● Mantenha seu rosto da fumaça. ● Use ventilação e exhaustão para remover fumo da zona respiratória.	● Não opere com as tampas removidas. ● Desligue a corrente antes de fazer serviço. ● Não toque as partes elétricas nuas.	● Mantenha-se afastado das partes moventes. ● Não opere com os paineis abertos ou guardas removidas.	Portuguese **ATENÇÃO**
● ヒュームから頭を離すようにして下さい。 ● 換気や排煙に十分留意して下さい。	● メンテナンス・サービスに取りかかる際には、まず電源スイッチを必ず切って下さい。	● パネルやカバーを取り外したままで機械操作をしないで下さい。	Japanese **注意事項**
●頭部遠離煙霧。 ●在呼吸區使用通風或排風器除煙。	● 維修前切斷電源。	●儀表板打開或沒有安全罩時不準作業。	Chinese **警 告**
● 얼굴로부터 용접가스를 멀리하십시요. ● 호흡지역으로부터 용접가스를 제거하기 위해 가스제거기나 통풍기를 사용하십시요.	● 보수전에 전원을 차단하십시요.	● 판넬이 열린 상태로 작동치 마십시요.	Korean **위 험**
● ابعد رأسك بعيداً عن الدخان. ● استعمل التهوية أو جهاز ضغط الدخان للخارج لكي تبعد الدخان عن المنطقة التي تتنفس فيها.	● اقطع التيار الكهربائي قبل القيام بأية صيانة.	● لا تشغل هذا الجهاز اذا كانت الاغطية الحديدية الواقية ليست عليه.	Arabic **تحذير**

LEIA E COMPREENDA AS INSTRUÇÕES DO FABRICANTE PARA ESTE EQUIPAMENTO E AS PARTES DE USO, E SIGA AS PRÁTICAS DE SEGURANÇA DO EMPREGADOR.

使う機械や溶材のメーカーの指示書をよく読み、まず理解して下さい。そして貴社の安全規定に従って下さい。

請詳細閱讀並理解製造廠提供的説明以及應該使用的銀捍材料，並請遵守貴方的有関勞動保護規定。

이 제폼에 동봉된 작업지침서를 숙지하시고 귀사의 작업자 안전수칙을 준수하시기 바랍니다.

اقرأ بتمعن وافهم تعليمات المصنع المنتج لهذه المعدات والمواد قبل استعمالها واتبع تعليمات الوقاية لصاحب العمل.

WELDMARK 225

• Manufactured by Lincoln Electric Company •
Cleveland, Ohio 44117-1199 U.S.A. TEL: 216.481.8100 FAX: 216.486.1751 WEB SITE: www.lincolnelectric.com