SMALL WIRE FEEDER WELDERS MACHINE SCHEMATIC M24968 REV: A

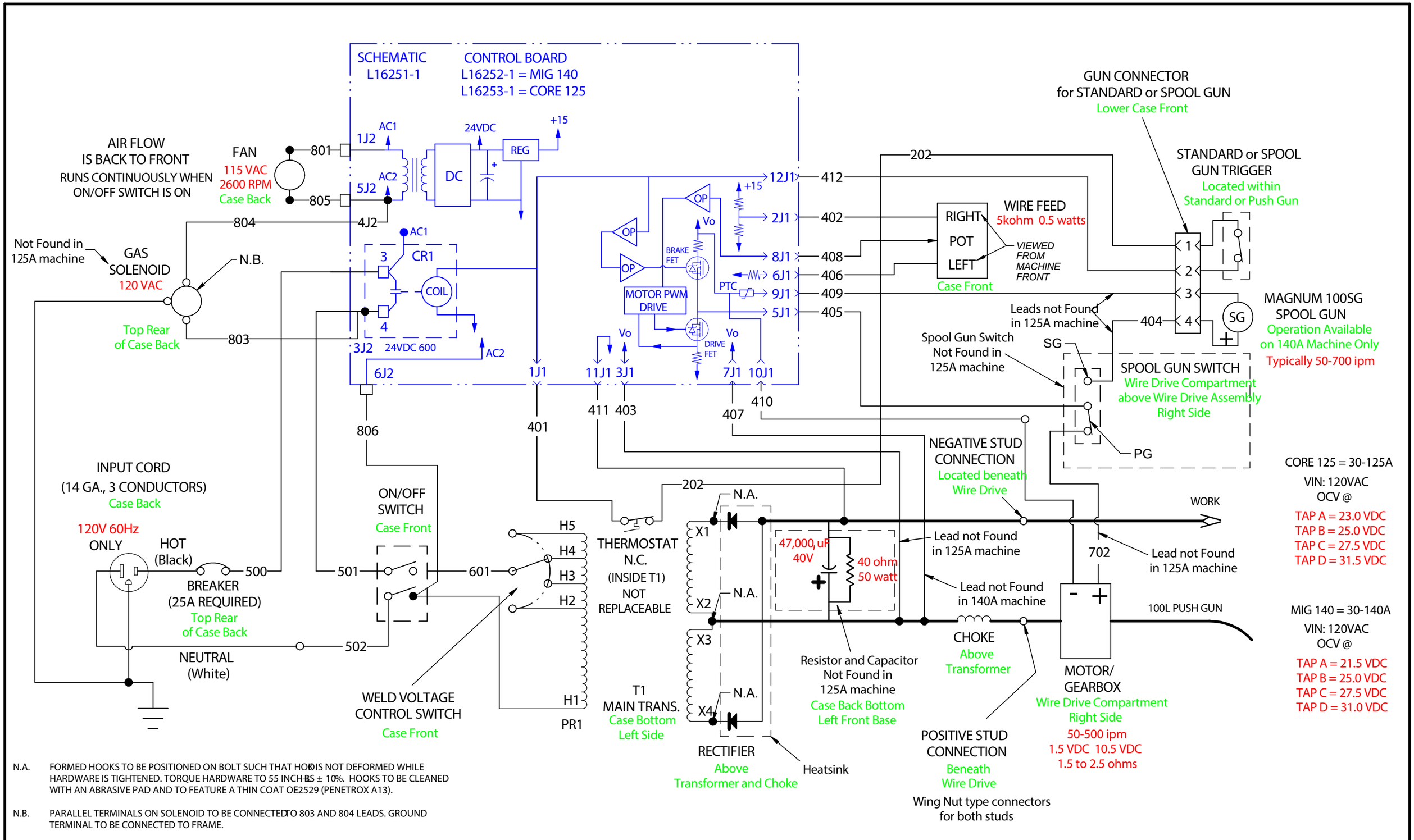

N.A. FORMED HOOKS TO BE POSITIONED ON BOLT SUCH THAT HOOK IS NOT DEFORMED WHILE HARDWARE IS TIGHTENED. TORQUE HARDWARE TO 55 INCH-LBS ± 10%. HOOKS TO BE CLEANED WITH AN ABRASIVE PAD AND TO FEATURE A THIN COAT OF E2529 (PENETROX A13).

N.B. PARALLEL TERMINALS ON SOLENOID TO BE CONNECTED TO 803 AND 804 LEADS. GROUND TERMINAL TO BE CONNECTED TO FRAME.