Operator's Manual

MAGNUM® PRO AL G225A/G450W

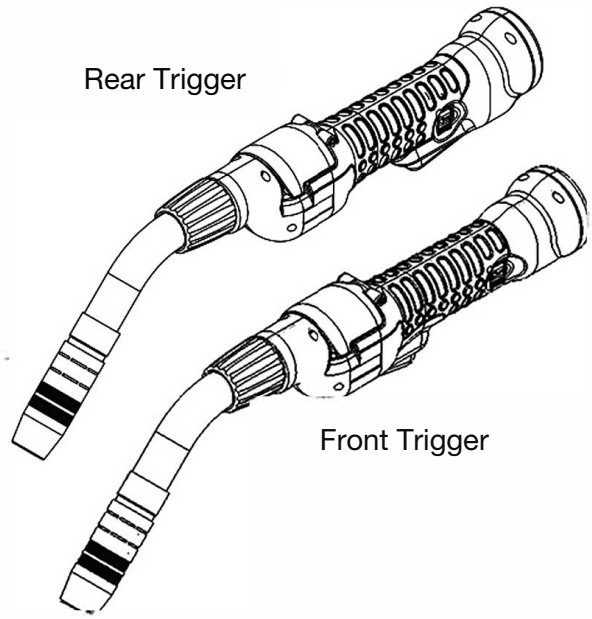

For use with machines having Code Numbers:

K4795-[]
K4796-[]
K4797-[]
K4798-[]

Register your machine:
www.lincolnelectric.com/register

Authorized Service and Distributer Locator:
www.lincolnelectric.com/locator

Save for future reference

Date Purchased

Code: (ex: 10859)

Serial: (ex: U1060512345)

IM10576 | Issue Date Jul - 20

© Lincoln Global, Inc. All Rights Reserved.

THE LINCOLN ELECTRIC COMPANY
22801 St. Clair Avenue • Cleveland, OH • 44117-1199 • U.S.A.
Phone: +1.216.481.8100 • www.lincolnelectric.com

THANK YOU FOR SELECTING A QUALITY PRODUCT BY LINCOLN ELECTRIC.

PLEASE EXAMINE CARTON AND EQUIPMENT FOR DAMAGE IMMEDIATELY

When this equipment is shipped, title passes to the purchaser upon receipt by the carrier. Consequently, claims for material damaged in shipment must be made by the purchaser against the transportation company at the time the shipment is received.

SAFETY DEPENDS ON YOU

Lincoln arc welding and cutting equipment is designed and built with safety in mind. However, your overall safety can be increased by proper installation ... and thoughtful operation on your part. **DO NOT INSTALL, OPERATE OR REPAIR THIS EQUIPMENT WITHOUT READING THIS MANUAL AND THE SAFETY PRECAUTIONS CONTAINED THROUGHOUT.** And, most importantly, think before you act and be careful.

⚠ WARNING

This statement appears where the information must be followed exactly to avoid serious personal injury or loss of life.

⚠ CAUTION

This statement appears where the information must be followed to avoid minor personal injury or damage to this equipment.

KEEP YOUR HEAD OUT OF THE FUMES.

DON'T get too close to the arc. Use corrective lenses if necessary to stay a reasonable distance away from the arc.

READ and obey the Safety Data Sheet (SDS) and the warning label that appears on all containers of welding materials.

USE ENOUGH VENTILATION or exhaust at the arc, or both, to keep the fumes and gases from your breathing zone and the general area.

IN A LARGE ROOM OR OUTDOORS, natural ventilation may be adequate if you keep your head out of the fumes (See below).

USE NATURAL DRAFTS or fans to keep the fumes away from your face.

If you develop unusual symptoms, see your supervisor. Perhaps the welding atmosphere and ventilation system should be checked.

WEAR CORRECT EYE, EAR & BODY PROTECTION

PROTECT your eyes and face with welding helmet properly fitted and with proper grade of filter plate (See ANSI Z49.1).

PROTECT your body from welding spatter and arc flash with protective clothing including woolen clothing, flame-proof apron and gloves, leather leggings, and high boots.

PROTECT others from splatter, flash, and glare with protective screens or barriers.

IN SOME AREAS, protection from noise may be appropriate.

BE SURE protective equipment is in good condition.

Also, wear safety glasses in work area **AT ALL TIMES.**

SPECIAL SITUATIONS

DO NOT WELD OR CUT containers or materials which previously had been in contact with hazardous substances unless they are properly cleaned. This is extremely dangerous.

DO NOT WELD OR CUT painted or plated parts unless special precautions with ventilation have been taken. They can release highly toxic fumes or gases.

Additional precautionary measures

PROTECT compressed gas cylinders from excessive heat, mechanical shocks, and arcs; fasten cylinders so they cannot fall.

BE SURE cylinders are never grounded or part of an electrical circuit.

REMOVE all potential fire hazards from welding area.

ALWAYS HAVE FIRE FIGHTING EQUIPMENT READY FOR IMMEDIATE USE AND KNOW HOW TO USE IT.

SECTION A: WARNINGS

CALIFORNIA PROPOSITION 65 WARNINGS

WARNING: Breathing diesel engine exhaust exposes you to chemicals known to the State of California to cause cancer and birth defects, or other reproductive harm.

- Always start and operate the engine in a well-ventilated area.
- If in an exposed area, vent the exhaust to the outside.
- Do not modify or tamper with the exhaust system.
- Do not idle the engine except as necessary.

For more information go to www.P65 warnings.ca.gov/diesel

WARNING: This product, when used for welding or cutting, produces fumes or gases which contain chemicals known to the State of California to cause birth defects and, in some cases, cancer. (California Health & Safety Code § 25249.5 *et seq.)*

WARNING: Cancer and Reproductive Harm www.P65warnings.ca.gov

ARC WELDING CAN BE HAZARDOUS. PROTECT YOURSELF AND OTHERS FROM POSSIBLE SERIOUS INJURY OR DEATH. KEEP CHILDREN AWAY. PACEMAKER WEARERS SHOULD CONSULT WITH THEIR DOCTOR BEFORE OPERATING.

Read and understand the following safety highlights. For additional safety information, it is strongly recommended that you purchase a copy of "Safety in Welding & Cutting - ANSI Standard Z49.1" from the American Welding Society, P.O. Box 351040, Miami, Florida 33135 or CSA Standard W117.2. A Free copy of "Arc Welding Safety" booklet E205 is available from the Lincoln Electric Company, 22801 St. Clair Avenue, Cleveland, Ohio 44117-1199.

BE SURE THAT ALL INSTALLATION, OPERATION, MAINTENANCE AND REPAIR PROCEDURES ARE PERFORMED ONLY BY QUALIFIED INDIVIDUALS.

FOR ENGINE POWERED EQUIPMENT.

1.a. Turn the engine off before troubleshooting and maintenance work unless the maintenance work requires it to be running.

1.b. Operate engines in open, well-ventilated areas or vent the engine exhaust fumes outdoors.

1.c. Do not add the fuel near an open flame welding arc or when the engine is running. Stop the engine and allow it to cool before refueling to prevent spilled fuel from vaporizing on contact with hot engine parts and igniting. Do not spill fuel when filling tank. If fuel is spilled, wipe it up and do not start engine until fumes have been eliminated.

1.d. Keep all equipment safety guards, covers and devices in position and in good repair. Keep hands, hair, clothing and tools away from V-belts, gears, fans and all other moving parts when starting, operating or repairing equipment.

1.e. In some cases it may be necessary to remove safety guards to perform required maintenance. Remove guards only when necessary and replace them when the maintenance requiring their removal is complete. Always use the greatest care when working near moving parts.

1.f. Do not put your hands near the engine fan. Do not attempt to override the governor or idler by pushing on the throttle control rods while the engine is running.

1.g. To prevent accidentally starting gasoline engines while turning the engine or welding generator during maintenance work, disconnect the spark plug wires, distributor cap or magneto wire as appropriate.

1.h. To avoid scalding, do not remove the radiator pressure cap when the engine is hot.

ELECTRIC AND MAGNETIC FIELDS MAY BE DANGEROUS

2.a. Electric current flowing through any conductor causes localized Electric and Magnetic Fields (EMF). Welding current creates EMF fields around welding cables and welding machines

2.b. EMF fields may interfere with some pacemakers, and welders having a pacemaker should consult their physician before welding.

2.c. Exposure to EMF fields in welding may have other health effects which are now not known.

2.d. All welders should use the following procedures in order to minimize exposure to EMF fields from the welding circuit:

2.d.1. Route the electrode and work cables together - Secure them with tape when possible.

2.d.2. Never coil the electrode lead around your body.

2.d.3. Do not place your body between the electrode and work cables. If the electrode cable is on your right side, the work cable should also be on your right side.

2.d.4. Connect the work cable to the workpiece as close as possible to the area being welded.

2.d.5. Do not work next to welding power source.

ELECTRIC SHOCK CAN KILL.

3.a. The electrode and work (or ground) circuits are electrically "hot" when the welder is on. Do not touch these "hot" parts with your bare skin or wet clothing. Wear dry, hole-free gloves to insulate hands.

3.b. Insulate yourself from work and ground using dry insulation. Make certain the insulation is large enough to cover your full area of physical contact with work and ground.

In addition to the normal safety precautions, if welding must be performed under electrically hazardous conditions (in damp locations or while wearing wet clothing; on metal structures such as floors, gratings or scaffolds; when in cramped positions such as sitting, kneeling or lying, if there is a high risk of unavoidable or accidental contact with the workpiece or ground) use the following equipment:

- Semiautomatic DC Constant Voltage (Wire) Welder.
- DC Manual (Stick) Welder.
- AC Welder with Reduced Voltage Control.

3.c. In semiautomatic or automatic wire welding, the electrode, electrode reel, welding head, nozzle or semiautomatic welding gun are also electrically "hot".

3.d. Always be sure the work cable makes a good electrical connection with the metal being welded. The connection should be as close as possible to the area being welded.

3.e. Ground the work or metal to be welded to a good electrical (earth) ground.

3.f. Maintain the electrode holder, work clamp, welding cable and welding machine in good, safe operating condition. Replace damaged insulation.

3.g. Never dip the electrode in water for cooling.

3.h. Never simultaneously touch electrically "hot" parts of electrode holders connected to two welders because voltage between the two can be the total of the open circuit voltage of both welders.

3.i. When working above floor level, use a safety belt to protect yourself from a fall should you get a shock.

3.j. Also see Items 6.c. and 8.

ARC RAYS CAN BURN.

4.a. Use a shield with the proper filter and cover plates to protect your eyes from sparks and the rays of the arc when welding or observing open arc welding. Headshield and filter lens should conform to ANSI Z87. I standards.

4.b. Use suitable clothing made from durable flame-resistant material to protect your skin and that of your helpers from the arc rays.

4.c. Protect other nearby personnel with suitable, non-flammable screening and/or warn them not to watch the arc nor expose themselves to the arc rays or to hot spatter or metal.

FUMES AND GASES CAN BE DANGEROUS.

5.a. Welding may produce fumes and gases hazardous to health. Avoid breathing these fumes and gases. When welding, keep your head out of the fume. Use enough ventilation and/or exhaust at the arc to keep fumes and gases away from the breathing zone. **When welding hardfacing (see instructions on container or SDS) or on lead or cadmium plated steel and other metals or coatings which produce highly toxic fumes, keep exposure as low as possible and within applicable OSHA PEL and ACGIH TLV limits using local exhaust or mechanical ventilation unless exposure assessments indicate otherwise. In confined spaces or in some circumstances, outdoors, a respirator may also be required. Additional precautions are also required when welding on galvanized steel.**

5. b. The operation of welding fume control equipment is affected by various factors including proper use and positioning of the equipment, maintenance of the equipment and the specific welding procedure and application involved. Worker exposure level should be checked upon installation and periodically thereafter to be certain it is within applicable OSHA PEL and ACGIH TLV limits.

5.c. Do not weld in locations near chlorinated hydrocarbon vapors coming from degreasing, cleaning or spraying operations. The heat and rays of the arc can react with solvent vapors to form phosgene, a highly toxic gas, and other irritating products.

5.d. Shielding gases used for arc welding can displace air and cause injury or death. Always use enough ventilation, especially in confined areas, to insure breathing air is safe.

5.e. Read and understand the manufacturer's instructions for this equipment and the consumables to be used, including the Safety Data Sheet (SDS) and follow your employer's safety practices. SDS forms are available from your welding distributor or from the manufacturer.

5.f. Also see item 1.b.

WELDING AND CUTTING SPARKS CAN CAUSE FIRE OR EXPLOSION.

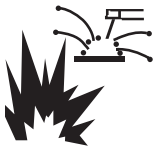

6.a. Remove fire hazards from the welding area. If this is not possible, cover them to prevent the welding sparks from starting a fire. Remember that welding sparks and hot materials from welding can easily go through small cracks and openings to adjacent areas. Avoid welding near hydraulic lines. Have a fire extinguisher readily available.

6.b. Where compressed gases are to be used at the job site, special precautions should be used to prevent hazardous situations. Refer to “Safety in Welding and Cutting” (ANSI Standard Z49.1) and the operating information for the equipment being used.

6.c. When not welding, make certain no part of the electrode circuit is touching the work or ground. Accidental contact can cause overheating and create a fire hazard.

6.d. Do not heat, cut or weld tanks, drums or containers until the proper steps have been taken to insure that such procedures will not cause flammable or toxic vapors from substances inside. They can cause an explosion even though they have been “cleaned”. For information, purchase “Recommended Safe Practices for the Preparation for Welding and Cutting of Containers and Piping That Have Held Hazardous Substances”, AWS F4.1 from the American Welding Society (see address above).

6.e. Vent hollow castings or containers before heating, cutting or welding. They may explode.

6.f. Sparks and spatter are thrown from the welding arc. Wear oil free protective garments such as leather gloves, heavy shirt, cuffless trousers, high shoes and a cap over your hair. Wear ear plugs when welding out of position or in confined places. Always wear safety glasses with side shields when in a welding area.

6.g. Connect the work cable to the work as close to the welding area as practical. Work cables connected to the building framework or other locations away from the welding area increase the possibility of the welding current passing through lifting chains, crane cables or other alternate circuits. This can create fire hazards or overheat lifting chains or cables until they fail.

6.h. Also see item 1.c.

6.I. Read and follow NFPA 51B “Standard for Fire Prevention During Welding, Cutting and Other Hot Work”, available from NFPA, 1 Batterymarch Park, PO box 9101, Quincy, MA 022690-9101.

6.j. Do not use a welding power source for pipe thawing.

CYLINDER MAY EXPLODE IF DAMAGED.

7.a. Use only compressed gas cylinders containing the correct shielding gas for the process used and properly operating regulators designed for the gas and pressure used. All hoses, fittings, etc. should be suitable for the application and maintained in good condition.

7.b. Always keep cylinders in an upright position securely chained to an undercarriage or fixed support.

7.c. Cylinders should be located:

- Away from areas where they may be struck or subjected to physical damage.
- A safe distance from arc welding or cutting operations and any other source of heat, sparks, or flame.

7.d. Never allow the electrode, electrode holder or any other electrically “hot” parts to touch a cylinder.

7.e. Keep your head and face away from the cylinder valve outlet when opening the cylinder valve.

7.f. Valve protection caps should always be in place and hand tight except when the cylinder is in use or connected for use.

7.g. Read and follow the instructions on compressed gas cylinders, associated equipment, and CGA publication P-I, “Precautions for Safe Handling of Compressed Gases in Cylinders,” available from the Compressed Gas Association, 14501 George Carter Way Chantilly, VA 20151.

FOR ELECTRICALLY POWERED EQUIPMENT.

8.a. Turn off input power using the disconnect switch at the fuse box before working on the equipment.

8.b. Install equipment in accordance with the U.S. National Electrical Code, all local codes and the manufacturer’s recommendations.

8.c. Ground the equipment in accordance with the U.S. National Electrical Code and the manufacturer’s recommendations.

Refer to http://www.lincolnelectric.com/safety for additional safety information.

Page

Installation.....Section A
Technical Specifications A-1
Support Equipment Required..... A-2
Installation Instructions..... A-3
Gun Lead Connections..... A-3
Coolant Connections A-3
Gun Tube Removal/Installation A-3
Lead Assy Spiral Wrap Installation..... A-4
Calibration A-5

Operation..... Section B
General Description..... B-1
Controls and Settings B-1
Poentiometer B-1
Micro Switch B-1
Trigger Sensitivity B-1
Sensitivity Adjustment B-1
Drive Roll and Idler Rolls..... B-1
Drive Roll Installation and Removal B-1
Idler Roll Installation and Removal..... B-1

General Options/Accessories ..... Section C
Cable Covers..... C-1

Maintenance..... Section D
Recommended Spare Parts List D-1

Troubleshooting .....Section E
How to Use Troubleshooting Guide..... E-1
Troubleshooting Guide E-2

Diagrams .....Section F
Diagrams / Parts List.....F-1
Electrical.....F-10

TECHNICAL SPECIFICATIONS - Magnum® Pro AL Gun AC (K4795 & K4797), WC (K4796 & K4798)

SPECIFICATIONS				
Make/Model	**Wire Speed**	**AMPS**	**Cooling**	**Duty Cycle**
K4795 K4797	800 IPM (20.3 mpm) Max. at rated feeder Input Voltage (42VAC)	225 Amps/25 Volts	Air Cooled	60% (All ratings are using Argon Gas)
K4796 K4798		450 Amps/25 Volts	Water Cooled	

MAGNUM® PRO ALUMINUM STOCK CONFIGURATIONS								
Product Number	**Pin Style**	**Gun Cable Length**	**Contact Tips**	**Gas Diffuser**	**Gas Nozzle**	**Insulator**	**Cable Liner**	**Gun Tube 45deg**
K4795- 1 K4797 - 1	12-Pin	15' / 4.5M	KP2745-364AT	KP2747-1A	KP2743-1-62RA	KP3982-2	KP4800-15	KP3380-45
K4795 - 2 K4797 - 2		25' / 7.6M					KP4800-25	
K4795 - 3 K4797 - 3		35' / 9.1M					KP4800-35	
K4795 - 4 K4797 - 4		50' / 15.2M					KP4800-50	
K4796 - 1 K4798 - 1	12-Pin	15' / 4.5M	KP2745-364AT	N/A Water Cooled	KP3375-1	S29830-92	KP4800-15	KP3381-45
K4796 - 2 K4798 - 2		25' / 7.6M					KP4800-25	
K4796 - 3 K4798 - 3		35' / 9.1M					KP4800-35	
K4796 - 4 K4798 - 4		50' / 15.2M					KP4800-50	

WIRE CAPACITY

.030 - 1/16" (0.8mm - 1.6mm) aluminum and cored wire

SUPPORT EQUIPMENT REQUIRED

- C.V. or C.C. Power Source of sufficient capacity for your needs.
- Regulated gas supply and hoses.
- Properly sized power leads from power source to wire feeder and ground.
- Water source and hose capable of providing a minimum of 1 quart (.95 liter) / min. at 45 p.s.i. when using water cooled guns.

GUN LEAD CONNECTIONS

POWER CABLE

Air Cooled

A #2 power cable is used on the Lincoln Electric Magnum® Pro AL Gun.

- The gun end of the power cable is secured into the gun body with a set screw, and the power pin end is threaded into the gun body.
- These connections utilize a conductive sealant and are tightened with torque requirements of 100 + 5 IN-LB.

Water Cooled

- Lincoln Electric Magnum® Pro AL Gun water cooled gun utilizes a power/water cable with a #6 AWG cable inside a 5/16" diameter hose.
- When water is used with this cable and the #10 water cooled gas nozzle (P/N KP3375-1), the system is rated at 450 amps @ 60% duty cycle.
- The gun end is threaded into the gun body.
- These connections utilize a conductive sealant and are tightened with torque requirements of 100 ± 5 IN-LB.

CONDUIT

- The Lincoln Electric Magnum® Pro AL Gun comes standard with a poly-lined conduit, for feeding aluminum wire.
- The longer fitting with a shallow groove is used on the gun end.
- Both ends of the conduit are secured into the Power Pin connector with a set screw.

GAS HOSE

- The BLACK gas hose is pushed over a barbed fitting on the end of the gun body and secured by twisting the hose retainer to the end of the hose (shown below).
- The opposite end of the BLACK hose is pushed over a barbed fitting in the Power Pin.
- The hose retainer is re-usable and can be removed and re-installed as needed.

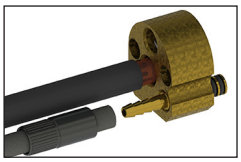

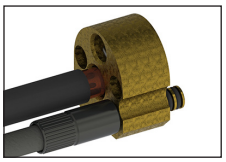

CONTROL CABLE

- A multi-conductor control cable is used on the Lincoln Electric Magnum® Pro AL Gun 12 pin.

COOLANT CONNECTIONS

- The ends of the coolant hose push over a barbed fitting on the end of the rear connector and are secured by twisting the hose retainer to the end of the hose.
- The hose retainer is re-usable and can be removed and re-installed as needed.
- The BLUE coolant supply hose pushes over a barbed fitting and is secured by twisting the hose retainer to the end of the hose.
- The opposite end of the BLUE hose pushes into a threaded coolant fitting.
- The RED coolant return hose pushes over the barbed fitting in the Power Manifold.
- The opposite end of the RED hose pushes into a threaded return hose of the coolant recirculator.
- Both threaded fittings on the end of the BLUE and RED hoses are standard left-hand thread.

S29830-14
5/16" Hose Retainer

S29830-97*
Left-Hand Threaded Fitting
**Must be ordered together*

S29830-96*
Nipple

COOLANT REQUIREMENTS

WARNING: Use Magnum Pro AL Coolant only - failure to use coolant will void warranty.

- Coolant is available in quantities of 1 gallon, 5 gallon (P/N KP3379-5), or a case of 4 gallons each (P/N KP3379-4).
- The coolant flow rate should be a minimum of 10 GPH (1 qt/min) between 35 and 45psi.
- Contact the re-circulator manufacturer for specifications on pressure.

GUN TUBE REMOVAL/ INSTALLATION

WARNING: Do not attempt to weld without the gun tube being tightly secured in the gun body, or damage to the gun tube or body may result.

a. To remove the gun tube assembly, loosen the taper lock nut until it is clear of the threads. Pull gun tube out of the gun body.

b. To replace a gun tube assembly, open the drive and idler roll door and seat the gun tube assembly until the plastic liner is almost touching the drive and idler roll (Figure 1) and the rear copper face of the gun tube is flush with the aluminum body block (Figure 2).

c. Take care not to damage the "O" rings when inserting into the body. You should hear an audible "click" when the gun tube is inserted and seated.

d. Tighten taper lock nut assembly firmly so that gun tube cannot rotate.

Gun Tube Rotation

a. To rotate a gun tube assembly, loosen the taper lock nut assembly no more than 1 turn.

b. Rotate gun tube to the position of your choice and retighten taper lock nut assembly firmly so that the gun tube cannot rotate.

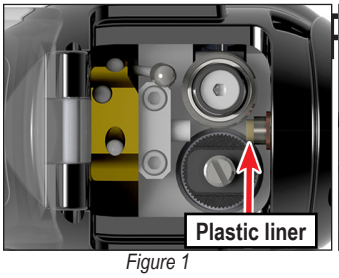

Figure 1

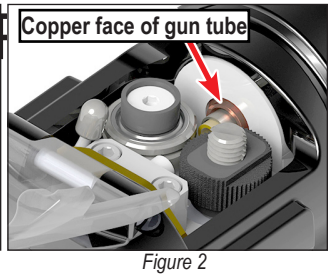

Figure 2

INSTALLATION

GUN END, AIR COOLED

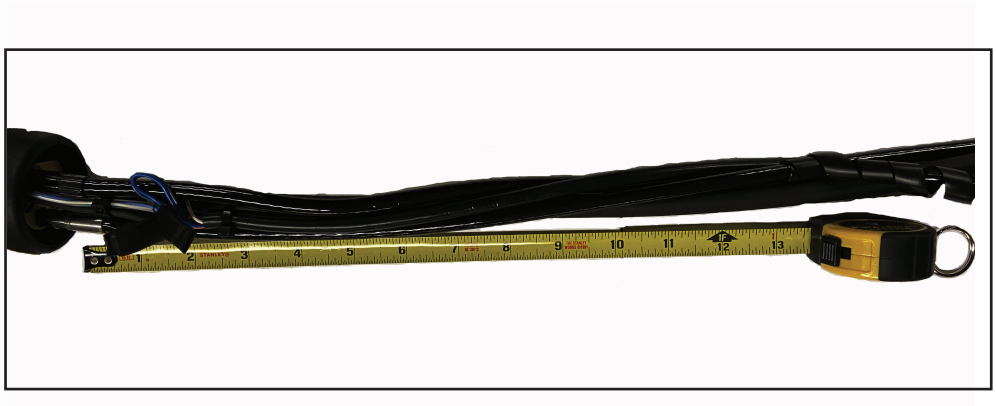

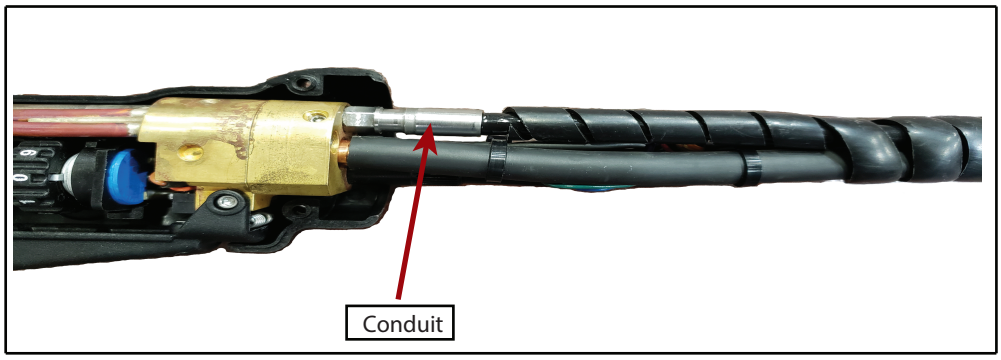

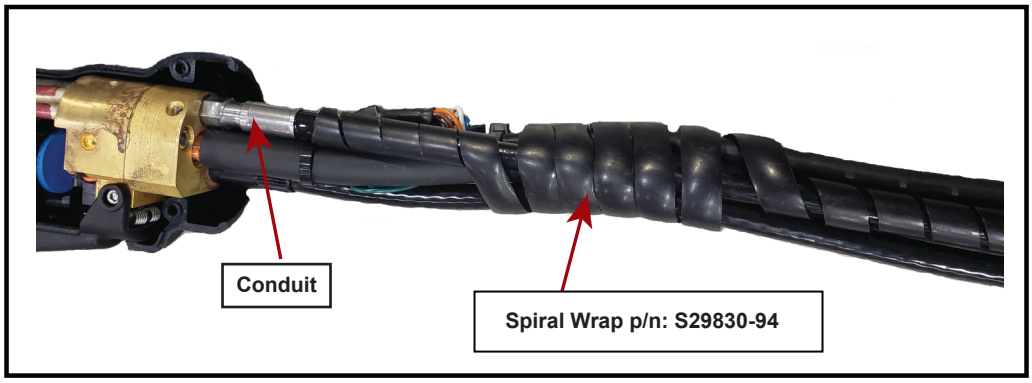

P.50 AUTO CALIBRATION PROCEDURE

The auto calibration procedure is used to provide an automatic means of configuring the pull gun to operate with the optimal setting of Gun Offset (P.7 in the user preference menu).

Before running the auto calibration procedure, make sure that the system is set up and ready for welding. P.24 must also be set for the correct pull gun type prior to running auto calibration.

To begin the auto calibration procedure, select P.50 from the user preferences menu. Press the “Begin” button to start the calibration. Pull the gun trigger and hold it closed throughout the procedure. Wire will feed out of the gun while the calibration is being performed. The welding output is NOT energized during the auto calibration procedure. The prompts on the display will indicate when the calibration is complete. If the calibration is interrupted or fails, the procedure should be repeated.

Auto calibration should be performed whenever the wire or gun is changed.

Press both soft keys simultaneously to get into the user settings

Figure 6

(Figure 6).

Figure 7

Scroll to setting P7 using the dial (Figure 7).

Figure 8

Press the adj soft key to adjust the setting (Figure 8).

GENERAL DESCRIPTION

The Lincoln Electric Magnum® Pro AL Gun maintains a constant, steady, uniform wire feed speed. The constant push exerted by the motor in the cabinet, combined with the pull of the gun motor, causes the wire to literally float friction-free through the wire conduit. The 24VDC gun motor is controlled by a three and three-quarter (3 3/4) turn potentiometer in the gun handle.

CONTROLS AND SETTINGS

Potentiometer:

- The laterally-positioned potentiometer is located in the gun body, providing up to 800 ipm with 3 3/4 turns.

Micro Switch:

- The micro switch assembly consists of the micro switch, and leads.

Trigger Sensitivity:

- The amount of trigger level travel can be shortened for a "quicker" or "more responsive" action.
- A more sensitive trigger lever is produced by reducing the gap between the trigger lever and the micro switch lever.
- By turning-in the Trigger Sensitivity Adjustment Screw, it closes the gap between the trigger lever and the micro switch lever - this enables the operator to increase the sensitivity of the trigger lever.

Sensitivity Adjustment:

- With the wire feeder turned on (with or without welding wire loaded), turn the screw in until the micro switch is activated.
- Once activated, the gun and wire feeder motors will begin feeding wire.
- Retract the screw accordingly until the system is deactivated and adjusted to the operators' liking.

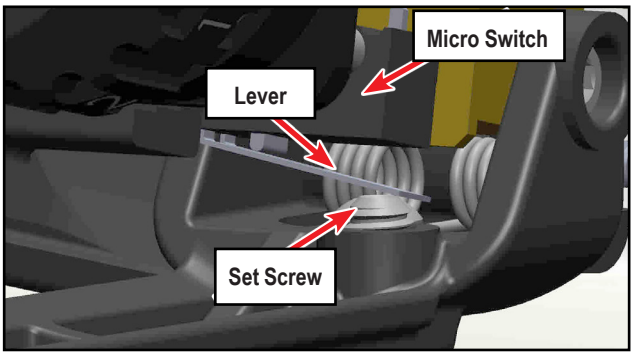

Screw adjusted out of trigger, pre-setting the micro switch lever for shorter trigger motion sensitivity.

DRIVE ROLL AND IDLER ROLLS

Drive Roll Installation and Removal:

NOTE: Neither of the handles needs to be removed to access the Drive or Idler Rolls.

1. Pull the Cam Lever away from the idler roll. This will relieve the pressure against the drive roll.
2. Align the Drive Roll Removal Tool (P/N K3987-1) over the flats of the drive roll (as shown below). Hold the gun with one hand or on a table top, with the other hand give the Removal Tool a quick snap-turn in the **CLOCKWISE DIRECTION.**

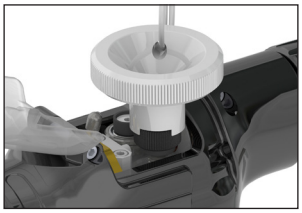

3. Once the drive roll is loose, continue to spin drive roll in the clockwise direction to remove the drive roll from the gun.
4. Install a new drive roll on the left-hand threaded shaft. The drive roll will self-tighten when it is feeding wire.

Idler Roll Installation and Removal:

Please use the following drawing as a guide when needing to reassemble prior to installing into the welding gun.

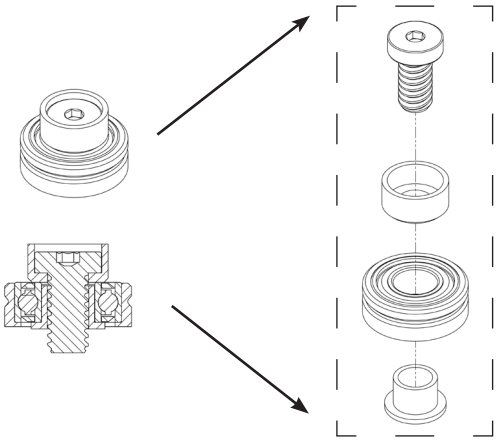

GENERAL OPTIONS/ ACCESSORIES

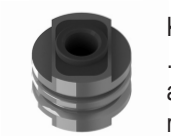

KP3989-1 Insulated Groove Drive Roll Kit - For .035" (0.9mm) dia. and .040" (1.0mm) dia. aluminum wire. Includes insulated groove drive roll and insulated idler roll assy.

KP3989-2 Insulated Groove Drive Roll Kit - For 3/64" (1.2mm) dia. and .062" (1.6mm) dia.aluminum wire. Includes insulated groove drive roll and insulated idler roll assy.

Cable Covers:

Cable covers are standard on all guns. You may order spare replacement covers to protect the lead assy of the gun when the factory one becomes damaged or worn. It can easily be replaced in the field by means of Velcro©.

KP3378-15 Cable Cover (for 15 ft leads)

KP3378-25 Cable Cover (for 25 ft leads)

KP3378-35 Cable Cover (for 35 ft leads)

KP3378-50 Cable Cover (for 50 ft leads)

GUN TUBE ASSEMBLIES

Air Cooled

- Air cooled guns come standard with a 45° curved gun tube (P/N KP3380-45).
- The gun tube assembly locks to the gun body using a taper lock system.

Water Cooled

- Water cooled gun comes standard with a 45° curved water cooled gun tube assembly (P/N KP3381-45)

Optional 6" Gun Tube Assemblies

Air Cooled & Water Cooled (Replaceable diffuser)

KP3380-180 – Straight
KP3380-45 – 45° (Standard on Air Cooled)
KP3380-60 – 60°

Air Cooled & Water Cooled (Fixed diffuser)

KP3988-180 - Straight
KP3988-45 – 45°
KP3988-60 – 60°

Water Cooled Only (Fixed diffuser & Water Cooled Nozzle)

KP3381-180 – Straight
KP3381-45 – 45° (Standard on Water Cooled)
KP3381-60 – 60°

MAINTENANCE COMPONENTS

Recommended Spare Parts List

DESCRIPTION	PART NO. FOR K3355, K3356, K3357, K3358	PART NO. FOR K4795, K4796, K4797, K4798
Conduit Liner -15 ft	KP4800-15	
Conduit Liner - 25 ft	KP4800-25	
Conduit Liner - 35 ft	KP4800-35	
Conduit Liner - 50 ft	KP4800-50	
Door	S29830-15	
Trigger Assy. Kit	S29830-48	S29830-112
Potentiometer Kit	S29830-50	
Handle Kit	S29830-45	S29830-111
Micro-Switch Kit	S29830-47	S29830-113
Drive Roll	KP3990-1	
Drive Roll Removal Tool	K3987-1	
Idler Roll Kit	KP3992-1	
Contact Tip Removal Tool	K3986-1	
O-Ring Kit	S29830-83	
Hardware Kit	S29830-51	
Noalox Kit	S29830-52	
Liner Package Magnum PRO .035-3/64 (5)	KP3376-3	
Liner Package Magnum PRO 1/16 (5)	KP3376-1	

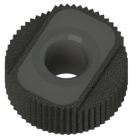

KNURLED INSULATED DRIVE ROLL
KP3990-1

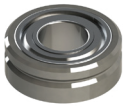

INSULATED IDLER ROLL
KP3992-364 (3/64 Wire)
KP3992-035 (0.035 Wire)
KP3992-116 (1/16 Wire)

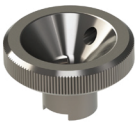

DRIVE ROLL REMOVAL TOOL
K3987-1

MICRO SWITCH ASSEMBLY
S29830-47
S29830-113

CONTACT TIP REMOVAL TOOL
(SHOWN WITH TIP)
K3986-1

HOW TO USE TROUBLESHOOTING GUIDE

⚠ WARNING

Service and Repair should only be performed by Lincoln Electric Factory Trained Personnel. Unauthorized repairs performed on this equipment may result in danger to the technician and machine operator and will invalidate your factory warranty. For your safety and to avoid Electrical Shock, please observe all safety notes and precautions detailed throughout this manual.

This Troubleshooting Guide is provided to help you locate and repair possible machine malfunctions. Simply follow the three-step procedure listed below.

Step 1. LOCATE PROBLEM (SYMPTOM).

Look under the column labeled "PROBLEM (SYMPTOMS)". This column describes possible symptoms that the machine may exhibit. Find the listing that best describes the symptom that the machine is exhibiting.

Step 2. POSSIBLE CAUSE.

The second column labeled "POSSIBLE CAUSE" lists the obvious external possibilities that may contribute to the machine symptom.

Step 3. RECOMMENDED COURSE OF ACTION

This column provides a course of action for the Possible Cause, generally it states to contact your local Lincoln Authorized Field Service Facility.

If you do not understand or are unable to perform the Recommended Course of Action safely, contact your local Lincoln Authorized Field Service Facility.

⚠ CAUTION

If for any reason you do not understand the test procedures or are unable to perform the tests/repairs safely, contact your **Local Lincoln Authorized Field Service Facility** for technical troubleshooting assistance before you proceed.

Observe all Safety Guidelines detailed throughout this manual

PROBLEMS (SYMPTOMS)	POSSIBLE CAUSE	RECOMMENDED COURSE OF ACTION
No wire feed at gun.	115/42 VAC Control fuse in feeder/Control box blown.	Replace fuse.
	Micro-switch defective/not being activated.	Replace switch. Check switch for operation.
	Broken electrical cable.	Check micro switch wires for continuity.
Wire feeds, but welding wire is not energized.	Loose or no cable connections.	Check all power connections.
	Welding power source.	Check power source.
Wire feeds erratically.	Dirty or worn conduit.	Replace conduit.
	Wrong size contact tip.	See Contact tip table.
	Idler roll stuck.	Replace if damaged.
Wire feeds one speed only.	Bad potentiometer.	Check with meter.
	Broken electrical cable.	Check potentiometer wires for continuity or short.
	Bad speed control.	See specific cabinet/control owners manual for speed control operation.
Wire walks out of drive rolls.	Idler roll upside-down.	Place groove in idler roll toward top.

⚠ CAUTION

If for any reason you do not understand the test procedures or are unable to perform the tests/repairs safely, contact your **Local Lincoln Authorized Field Service Facility** for technical troubleshooting assistance before you proceed.

HEAD ASSY DIAGRAM - MAGNUM® PRO AL GUN K4795 & K4796

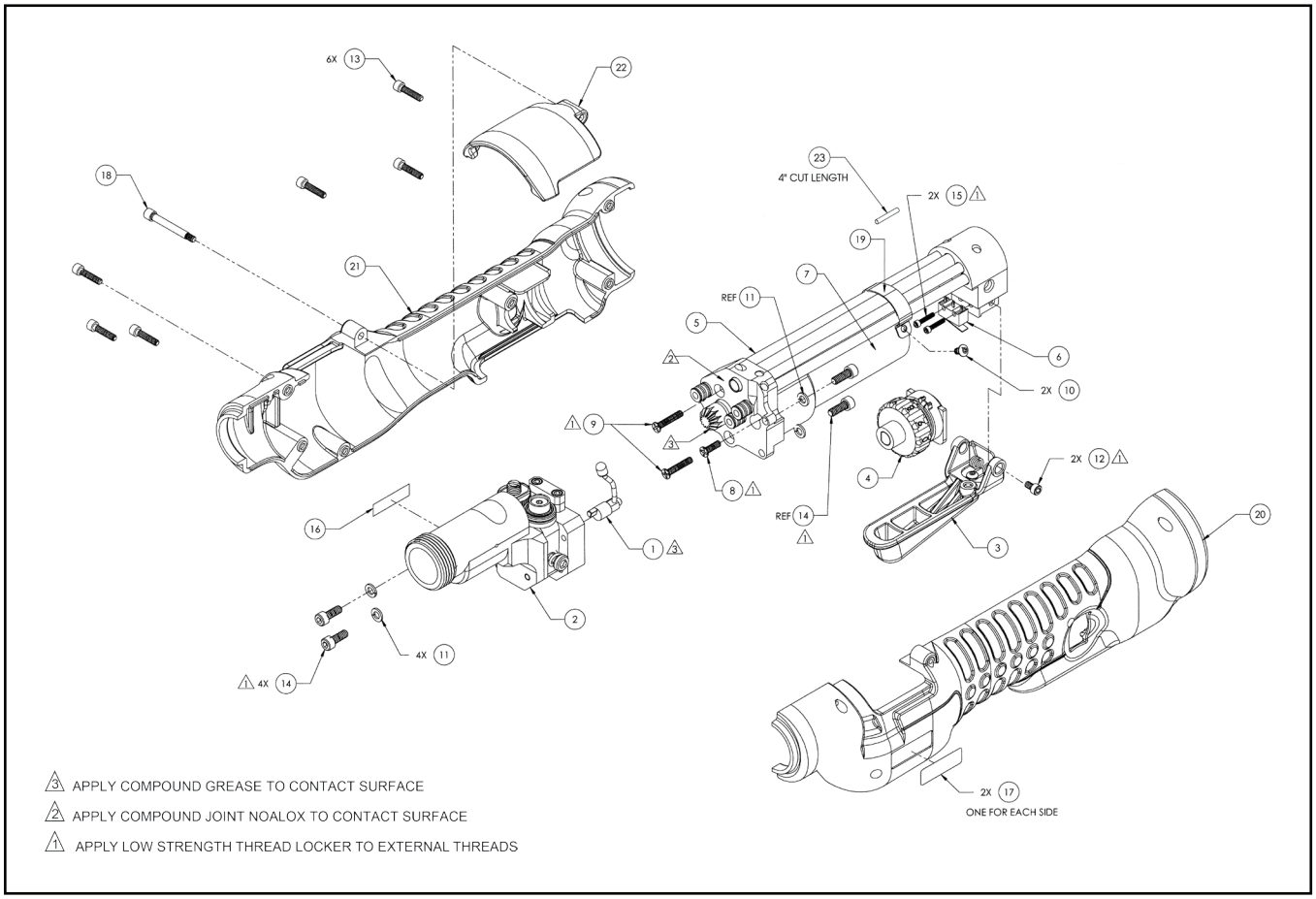

4 Please identify your front body assembly before ordering a replacement part.

If your Front Body Assembly looks like figure 2, you need to also replace the handles when replacing the Front Body Assembly.

If your Front Body Assembly looks like figure 1, identified by the notch in the lower right, you do not need to replace the handles when replacing the front body assembly.

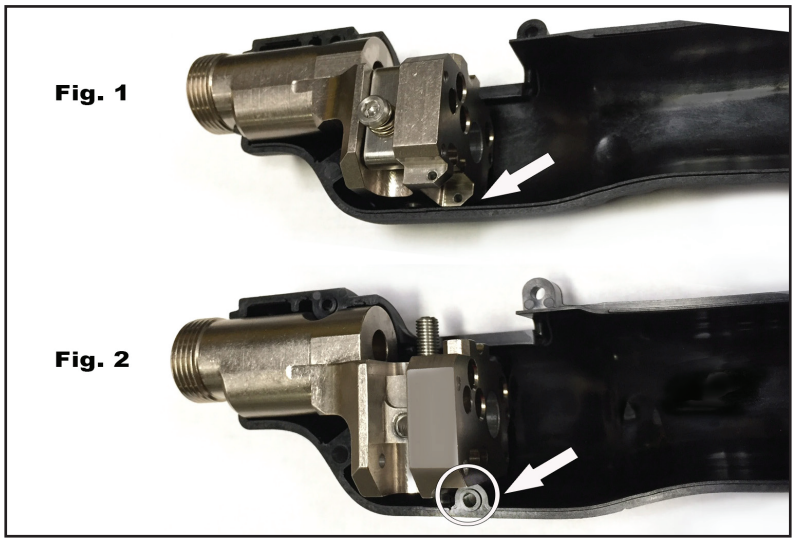

HEAD ASSY DIAGRAM - MAGNUM® PRO AL GUN K4795 & K4796

No.	Part No.	Description
1	S29830-1	Assy Cam Idler Arm
⚠4 2	S29830-6	Front Body Assy, A/W
3	S29830-48	Assy Trigger Magnum® Pro AL Gun
4	S29830-50	Kit Assy Pot Magnum® Pro AL Gun
5	S29830-10	Assy Rear Body Magnum® Pro AL Gun
6	S29830-47	Kit Assy Micro Swx Magnum® Pro AL Gun
7	S29830-13	Motor 24VDC, Standard
8	included in S29830-51	Scr FH Phil 82 4-40 x 3/8 SST
9		Scr FH Phil 82 4-40 5/8 SST
10		Scr Button 4-40 x 3/16 SST
11		Wshr SPR LK #6 SST
12		Scr Soc. HD Cap #4-40, SST
13	included in S29830-45	Screw SHC 4-40 x 1/2 SST
14	included in S29830-51	Scr SHC 6-32 x 3/8 SST
15		Scr Soc HD Cap #1-72 x 3/8 LG SST
16	For reference only	Label
17	S29830-98	Handle Decal
18	included in S29830-45	Scr Shoulder 1/8, Door MX
19	S29830-85	Strap Motor
20	included in S29830-45	Kit Handle Magnum® Pro AL Gun : includes item 13, 17, 18 and 22
21		
22	S29830-15	Door
23	For reference only	Heat Shrink Tubing

HEAD ASSY DIAGRAM - MAGNUM® PRO AL GUN K4797 & K4798

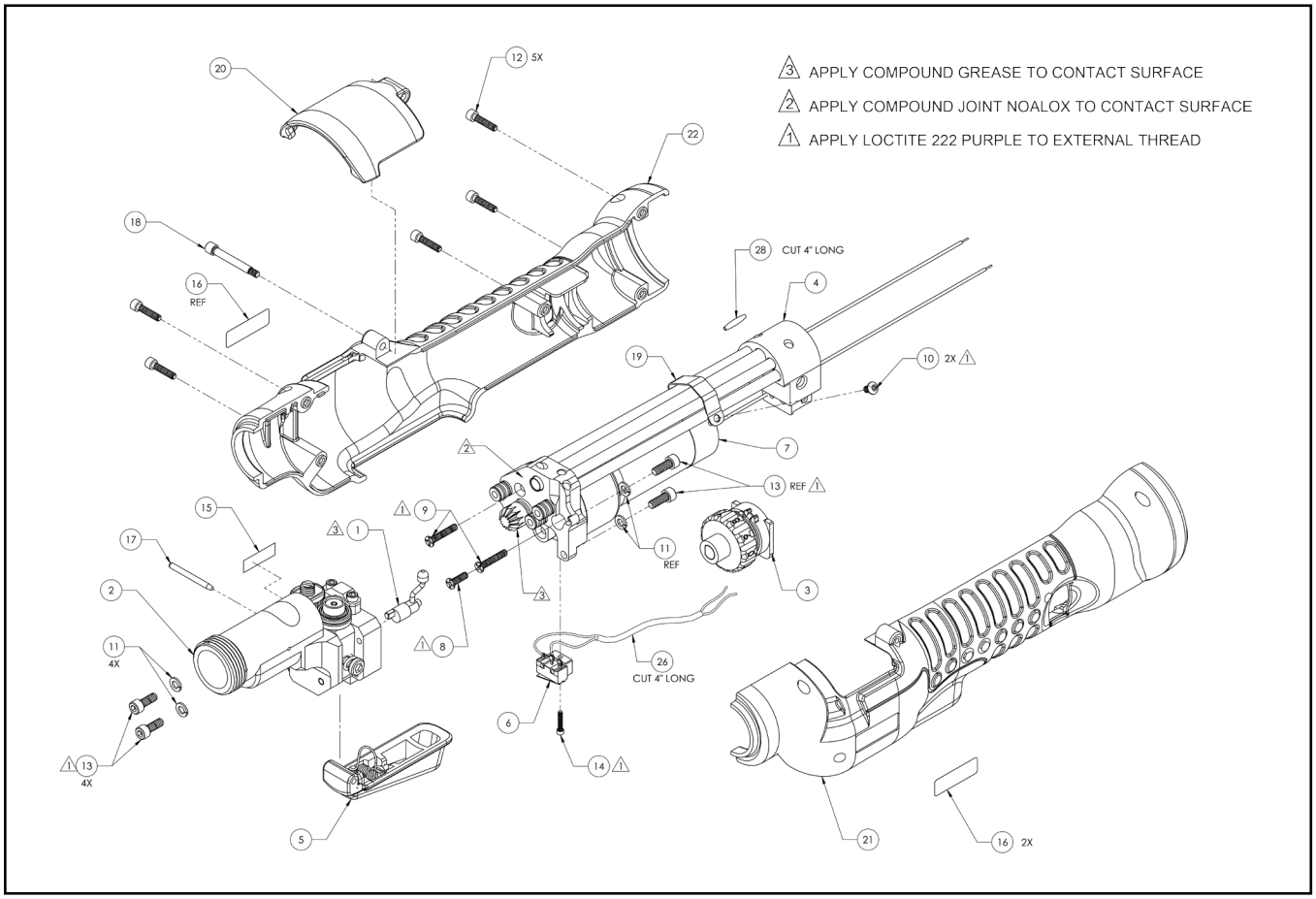

No.	Part No.	Description
1	S29830-1	Assy Cam Idler Arm
2	S29830-6	Front Body Assy, A/W
3	S29830-50	Kit Assy Pot Magnum® Pro AL Gun
4	S29830-10	Assy Rear Body Magnum® Pro AL Gun
5	S29830-112	Assy Trigger Magnum® Pro AL Gun
6	S29830-113	Kit Assy Micro Swx Magnum® Pro AL Gun
7	S29830-13	Motor 24VDC, Standard
8	included in S29830-51	Scr FH Phil 82 4-40 x 3/8 SST
9		Scr FH Phil 82 4-40 5/8 SST
10		Scr Button 4-40 x 3/16 SST
11		Wshr SPR LK #6 SST
12	included in S29830-111	Screw SHC 4-40 x 1/2 SST
13	included in S29830-51	Scr SHC 6-32 x 3/8 SST
14		Scr Soc HD Cap #1-72 x 3/8 LG SST
15	For reference only	Label
16	S29830-98	Handle Decal
17	included in S29830-51	Dowel Pin
18	included in S29830-111	Scr Shoulder 1/8, Door MX
19	S29830-85	Strap Motor
20	S29830-15	Door
21	included in S29830-111	Kit Handle Magnum® Pro AL Gun : includes item 12, 16, 18 and 20
22		
26	For reference only	PVC Tubing
28	For reference only	Heat Shrink Tubing

FRONT BODY ASSY DIAGRAM - MAGNUM® PRO AL GUN K4795, K4796, K4797, & K4798

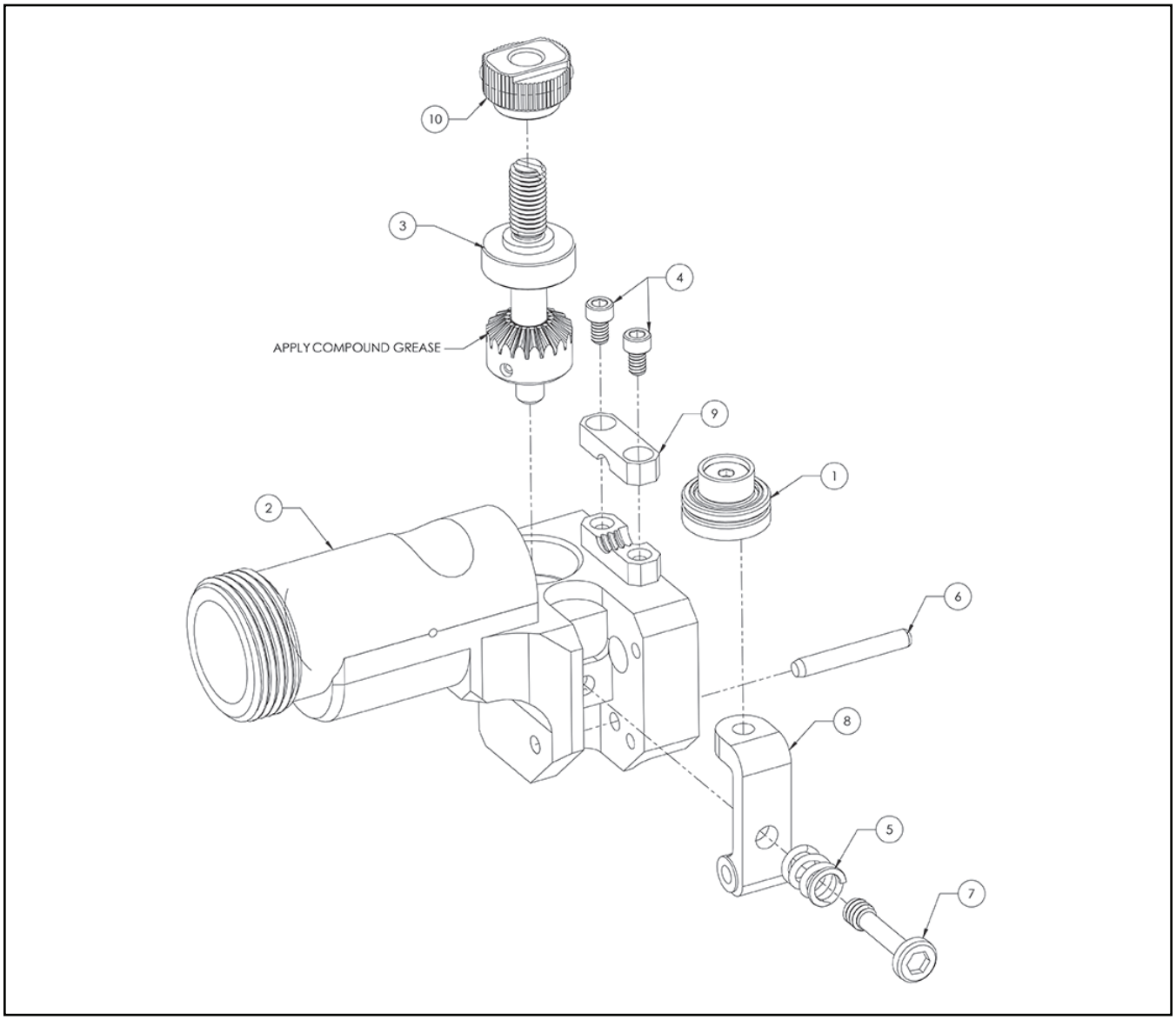

No.	Part No.	Description
1	KP3992-1	Assy Idler Roll Insulated Knurl
2	-	Not available separately. See Note.
3		
4	included in S29830-51	Scr Soc. HD. Cap #4-40 SST
5	S29830-88	0.29 x 0.047 x 0.32 Comp. Spring
6	S29830-89	1/8 x 7/8 SST Dowel Pin
7	included in S29830-51	Idler Adjusting Screw
8	S29830-86	Idler Arm
9	S29830-87	Clamp Body
10	KP3990-1	Assy Drive Roll Insulated Knurl

A/W GUN TUBE ASSY DIAGRAM - MAGNUM® PRO AL GUN K4795 & K4797

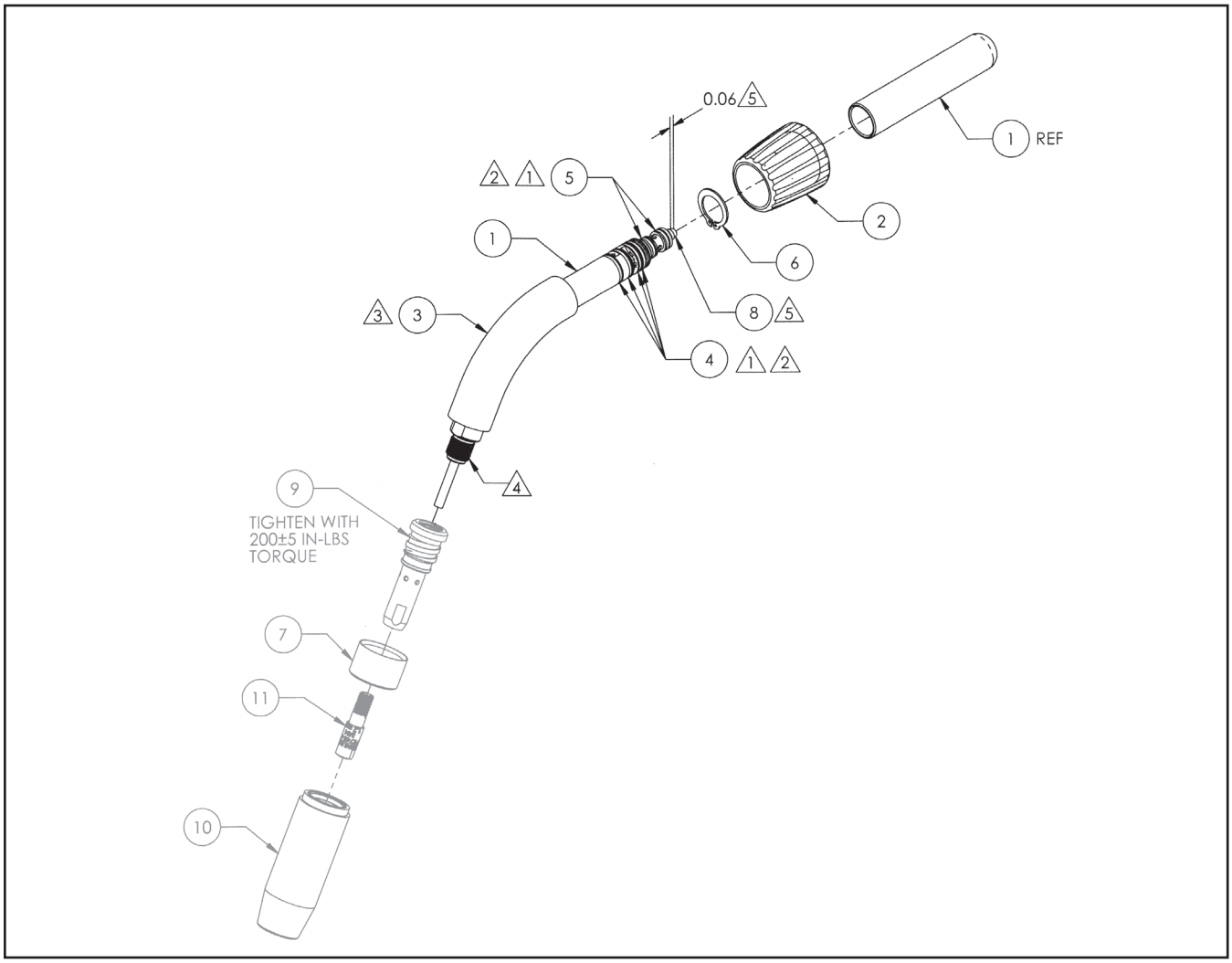

5 INSERT ITEM #8 INTO ITEM #1 UNTIL BOTTOM OUT. TRIM OFF ITEM #8 FROM EXITING HOLE A DISTANCE AS SHOWN.
4 APPLY COMPOUND JOINT NOALOX ON MALE THREAD.
3 APPLY QUICK DRYING HOSE LUBRICANT INSIDE ITEM #3 BEFORE INSTALLATION.
2 APPLY SILICONE LUBRICANT TO O-RING BEFORE INSTALLATION.
1 INSTALL ITEM #4 AND 5 AFTER ITEM #2 HAS BEEN INSERTED ON GUN TUBE

No.	Part Number	Description
1	-	Not available separately
2	included in S29830-49	Assy Nut Gun Tube
3		Insulator Gun Tube
4	included in S29830-83	O-Ring 0.489ID x 0.07W
5		O-Ring 0.301ID x 0.07W
6	S29830-90	Ring Ret Ext 1/4OD x 0.023W
7	-	See Page A-1 for options and part numbers
8	KP3376-1	Liner Package
9	-	See Page A-1 for options and part numbers
10		
11		

W/C GUN TUBE ASSY DIAGRAM - MAGNUM® PRO AL GUN K4796 & K4798

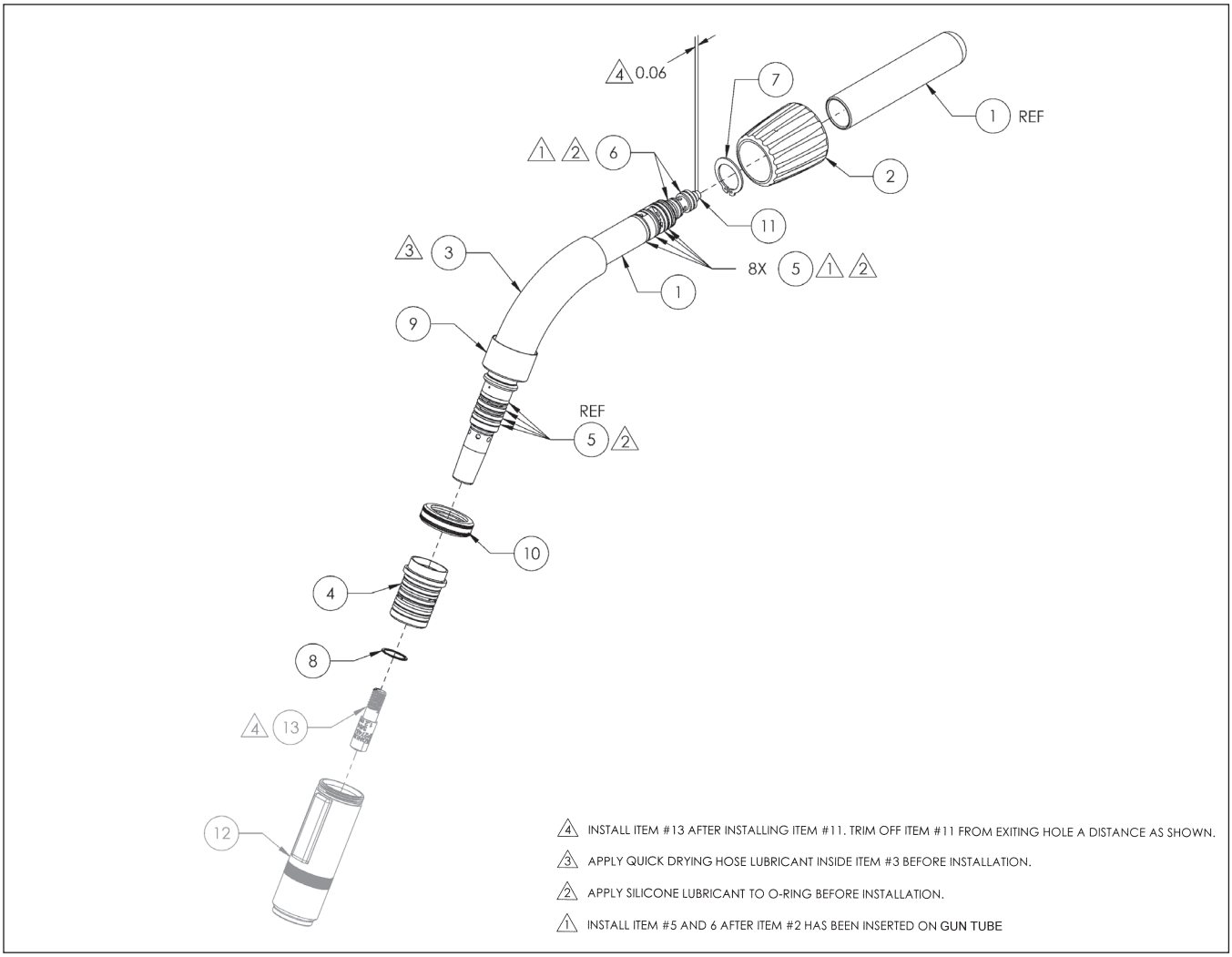

No.	Part No.	Description
1	-	Not available separately
2	included in S29830-49	Assy Nut Gun Tube
3		Insulator Gun Tube
4	S29830-92	Insulator Nozzle with Five O-Rings
5	included in S29830-83	O-Ring .489 ID x .07 W
6		O-Ring .301 ID x .07 W
7	S29830-90	Retaining Ring 5/8 Shaft
8	S29830-91	Ring Ret 0.500 Dia Shaft Spiral SST
9	-	See Page A-1 for options and part numbers
10	S29830-93	Retaining Nut W/C
11	KP3376-1	Liner Package
12	-	See Page A-1 for options and part numbers
13		

AIR COOLED LEAD ASSY DIAGRAM - MAGNUM® PRO AL GUN K4795 & K4797

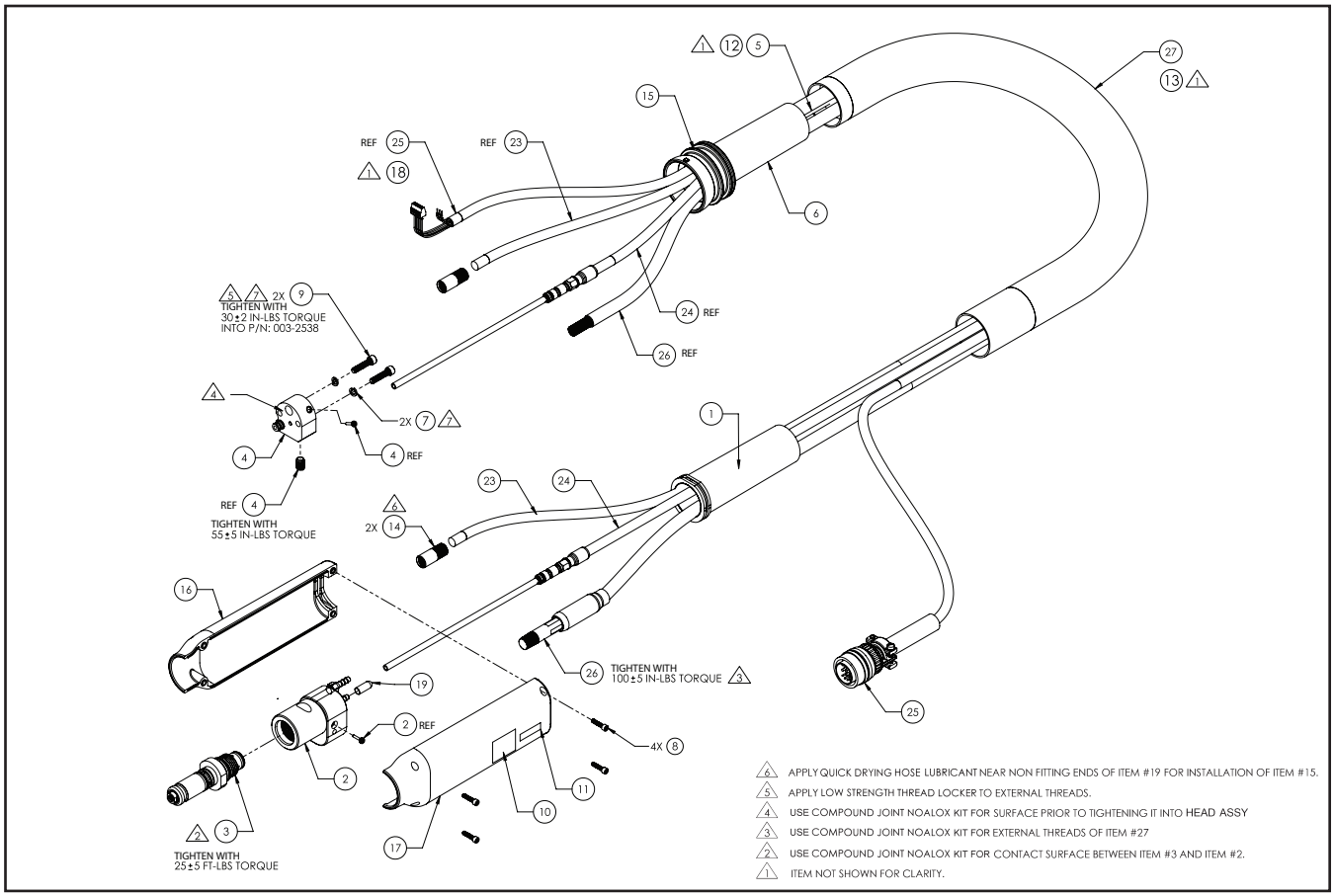

AIR COOLED LEAD ASSEMBLY DIAGRAM - K4795 & K4797					
No.	Description	15' Part No.	25' Part No.	35' Part No.	50' Part No.
1	ASST BOOT TORCH	S29830-2			
2	ASSY POWER MANIFOLD A/W	S29830-3			
3	ASSY POWER PIN ADAPTER	S29830-5			
4	ASSY REAR CONNECTOR A/C	S29830-9			
5	WRAP SPIRAL CORD 13"	S29830-94			
6	BOOT TORCH	S29830-99			
7	WASHER SPLIT LOCK, 0.270D x 0.17ID X 0.04	INCLUDED IN S29830-51			
8	SCREW SHC 4-40 X 1/2 SST	INCLUDED IN S29830-46			
9	SCR SHC 8-32 X 3/4 SST	INCLUDED IN S29830-51			
10	LABEL WARNING	FOR REFERENCE ONLY			
11					
12	TIE WRAP 1.0 DIA X 0.19 BLACK NYLON	INCLUDED WITH ITEM 25			
13	TIE WRAP LOW PROF 14-9/16LG BLK	INCLUDED WITH ITEM 27			
14	RETAINER 5/16 HOSE	S29830-14			
15	SWIVEL JOINT MOLDED MAGNUM PRO	S29830-11			
16	HANDLE RIGHT LEAD MAGNUM PRO	S29830-46 (HANDLE KIT)			
17	HANDLE LEFT LEAD MAGNUM PRO				
18	HEAT SHRINK TUBING 1/2" DIA	FOR REFERENCE ONLY			
19	CAP VINYL ROUND, FIT 3/16"-1/4" OD X 1/2" LG				
20	COMPOUND JOINT NOALOX	S29830-52			
21	THREAD LOCKER LOW STRENGTH	FOR REFERENCE ONLY			
22	LUBRICANT HOSE QUICK DRYING				
23	HOSE GAS 1/8ID HOSE UNIV	S29830-21	S29830-22	S29830-23	S29830-24
24	ASSY CONDUIT MAGNUM PRO	KP4800-15	KP4800-25	KP4800-35	KP4800-50
	JUMP LINER	S29830-120			
25	ASSY CONTROLLER CABLE 12PIN (K4795, K4796, K4797, K4798)	S29830-41	S29830-42	S29830-43	S29830-44
26	ASSY A/C POWER CABLE	S29830-29	S29830-30	S29830-31	S29830-32
27	CABLE COVER	KP3378-15	KP3378-25	KP3378-35	KP3378-50

**** Hose Retainer is re-usable and can be removed and re-installed as needed***

WATER COOLED LEAD ASSY DIAGRAM - MAGNUM® PRO AL GUN K4796 & K4798

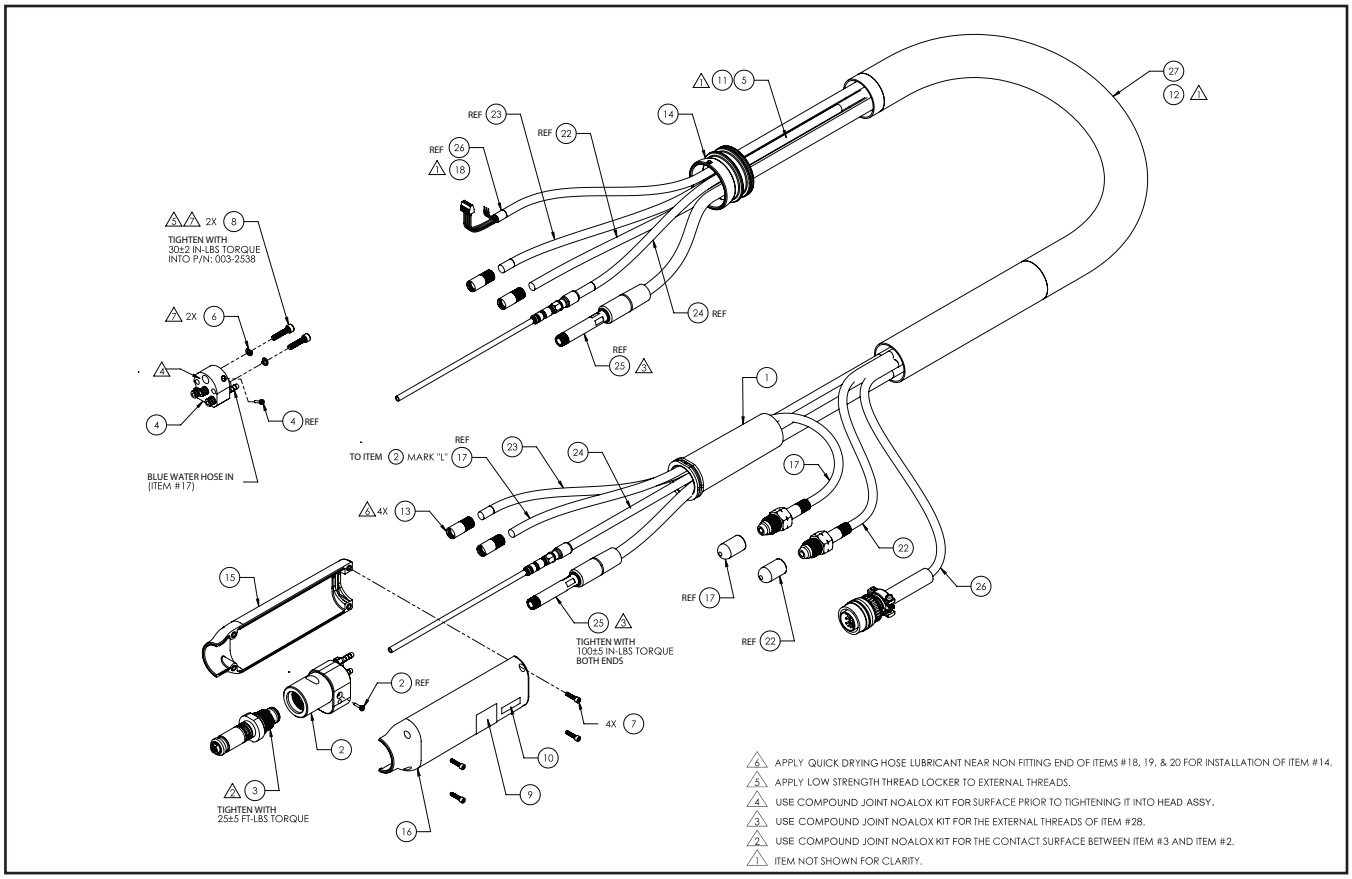

WATER COOLED LEAD ASSEMBLY DIAGRAM - K4796 & K4798					
No.	Description	15' Part No.	25' Part No.	35' Part No.	50' Part No.
1	ASST BOOT TORCH	S29830-2			
2	ASSY POWER MANIFOLD A/W	S29830-3			
3	ASSY POWER PIN ADAPTER	S29830-5			
4	ASSY REAR CONNECTOR A/W	S29830-12			
5	WRAP SPIRAL CORD 13"	S29830-94			
6	WASHER SPLIT LOCK, 0.270D x 0.17ID X 0.04	INCLUDED IN S29830-51			
7	SCREW SHC 4-40 X 1/2 SST	INCLUDED IN S29830-46			
8	SCR SHC 8-32 X 3/4 SST	INCLUDED IN S29830-51			
9	LABEL WARNING	FOR REFERENCE ONLY			
10					
11	TIE WRAP 1.0 DIA X 0.19 BLACK NYLON	INCLUDED WITH ITEM 25			
12	TIE WRAP LOW PROF 14-9/16LG BLK	INCLUDED WITH ITEM 27			
13	RETAINER 5/16 HOSE	S29830-14			
14	SWIVEL JOINT MOLDED MAGNUM PRO	S29830-11			
15	HANDLE RIGHT	S29830-46 (HANDLE KIT)			
16	HANDLE LEFT				
17	ASSY HOSE WATER RED LEFT HAND - (OEM)	S29830-16			
18	HEAT SHRINK TUBING 1/2" DIA	FOR REFERENCE ONLY			
19	COMPOUND JOINT NOALOX	S29830-52			
20	THREAD LOCKER LOW STRENGTH	FOR REFERENCE ONLY			
21	LUBRICANT HOSE QUICK DRYING				
22	ASSY HOSE WATER BLUE LEFT HAND (OEM)	S29830-17	S29830-18	S29830-19	S29830-20
23	HOSE GAS 1/8ID HOSE UNIV	S29830-21	S29830-22	S29830-23	S29830-24
24	ASSY CONDUIT MAGNUM PRO	KP4800-15	KP4800-25	KP4800-35	KP4800-50
	JUMP LINER	S29830-120			
25	ASSY W/C POWER CABLE	S29830-33	S29830-34	S29830-35	S29830-36
26	ASSY CONTROLLER CABLE 12PIN (K4795, K4796, K4797, K4798)	S29830-41	S29830-42	S29830-43	S29830-44
27	CABLE COVER	KP3378-15	KP3378-25	KP3378-35	KP3378-50

**** Hose Retainer is re-usable and can be removed and re-installed as needed***

POWER MANIFOLD ASSY DIAGRAM - MAGNUM® PRO AL GUN K4795, K4796, K4797, & K4798

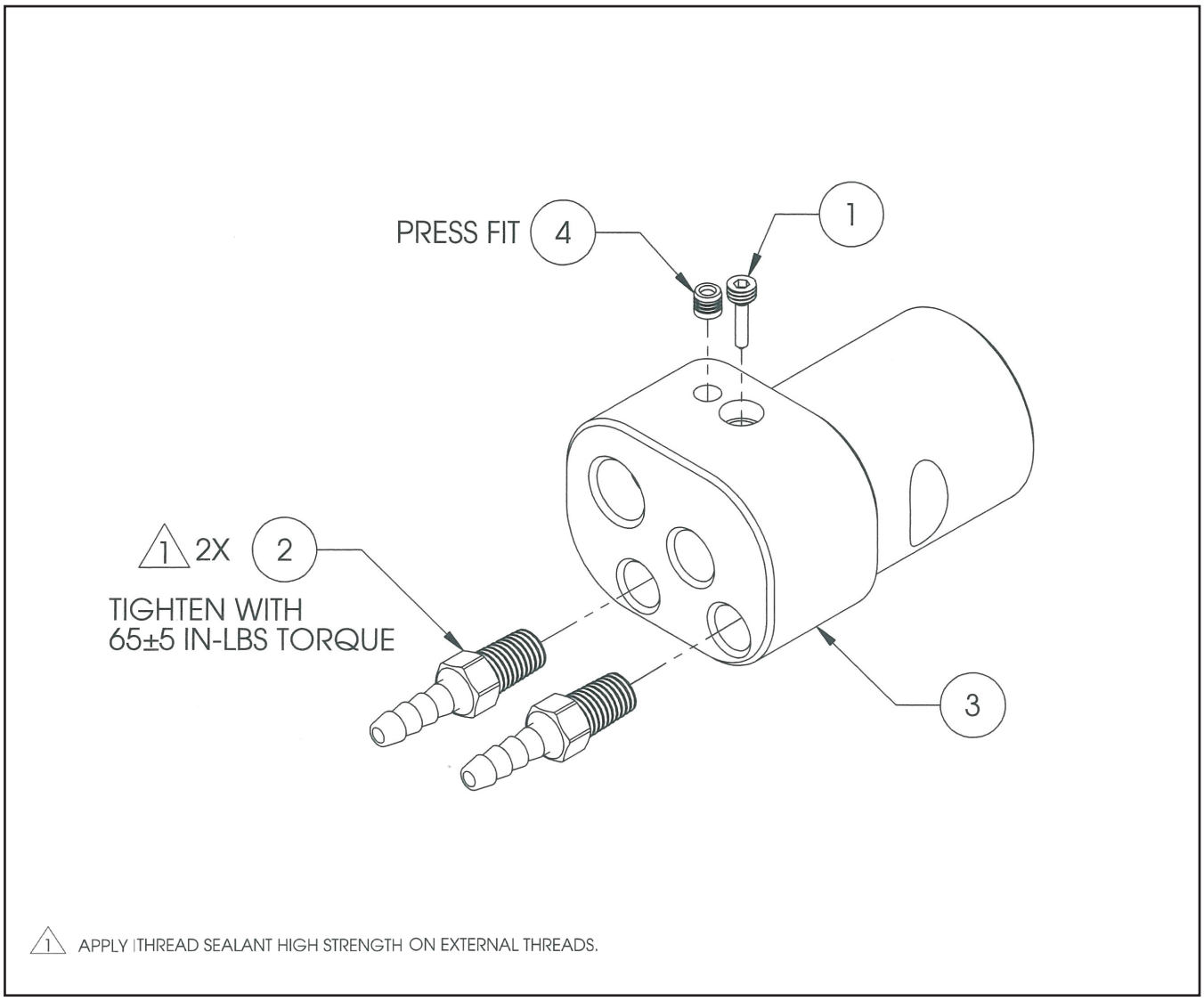

No.	Part No.	Description
1	included in S29830-51	Set Screw Conduit
2	S29830-95	Fitting 1/8ID x 1/16-27 NPT
3	-	Not available separately

Models K4795, K4796, K4797 and K4798

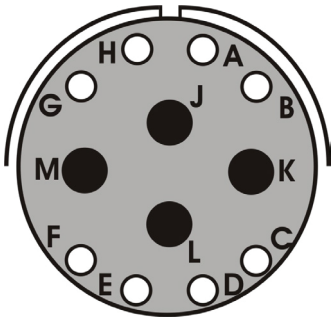

Cabinet End Amphenol Connector

Gun Connections

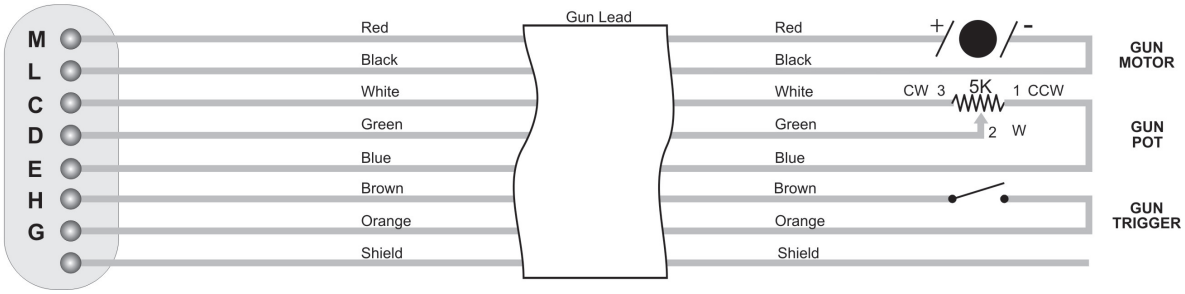

NOTES

WARNING	● Do not touch electrically live parts or electrode with skin or wet clothing. ● Insulate yourself from work and ground.	● Keep flammable materials away.	● Wear eye, ear and body protection.
Spanish **AVISO DE PRECAUCION**	● No toque las partes o los electrodos bajo carga con la piel o ropa mojada. ● Aislese del trabajo y de la tierra.	● Mantenga el material combustible fuera del área de trabajo.	● Protéjase los ojos, los oídos y el cuerpo.
French **ATTENTION**	● Ne laissez ni la peau ni des vêtements mouillés entrer en contact avec des pièces sous tension. ● Isolez-vous du travail et de la terre.	● Gardez à l'écart de tout matériel inflammable.	● Protégez vos yeux, vos oreilles et votre corps.
German **WARNUNG**	● Berühren Sie keine stromführenden Teile oder Elektroden mit Ihrem Körper oder feuchter Kleidung! ● Isolieren Sie sich von den Elektroden und dem Erdboden!	● Entfernen Sie brennbarres Material!	● Tragen Sie Augen-, Ohren- und Körperschutz!
Portuguese **ATENÇÃO**	● Não toque partes elétricas e electrodos com a pele ou roupa molhada. ● Isole-se da peça e terra.	● Mantenha inflamáveis bem guardados.	● Use proteção para a vista, ouvido e corpo.
Japanese **注意事項**	● 通電中の電気部品、又は溶材にヒフやぬれた布で触れないこと。 ● 施工物やアースから身体が絶縁されている様にして下さい。	● 燃えやすいものの側での溶接作業は絶対にしてはなりません。	● 目、耳及び身体に保護具をして下さい。
Chinese **警 告**	● 皮肤或濕衣物切勿接觸帶電部件及銲條。 ● 使你自己與地面和工件絶緣。	● 把一切易燃物品移離工作場所。	● 佩戴眼、耳及身體勞動保護用具。
Korean **위 험**	● 전도체나 용접봉을 젖은 헝겁 또는 피부로 절대 접촉치 마십시요. ● 모재와 접지를 접촉치 마십시요.	● 인화성 물질을 접근 시키지 마시요.	● 눈, 귀와 몸에 보호장구를 착용하십시요.
Arabic **تحذير**	● لا تلمس الاجزاء التي يسري فيها التيار الكهربائي أو الالكترود بجلد الجسم أو بالملابس المبللة بالماء. ● ضع عازلا على جسمك خلال العمل.	● ضع المواد القابلة للاشتعال في مكان بعيد.	● ضع أدوات وملابس واقية على عينيك وأذنيك وجسمك.

READ AND UNDERSTAND THE MANUFACTURER'S INSTRUCTION FOR THIS EQUIPMENT AND THE CONSUMABLES TO BE USED AND FOLLOW YOUR EMPLOYER'S SAFETY PRACTICES.

SE RECOMIENDA LEER Y ENTENDER LAS INSTRUCCIONES DEL FABRICANTE PARA EL USO DE ESTE EQUIPO Y LOS CONSUMIBLES QUE VA A UTILIZAR, SIGA LAS MEDIDAS DE SEGURIDAD DE SU SUPERVISOR.

LISEZ ET COMPRENEZ LES INSTRUCTIONS DU FABRICANT EN CE QUI REGARDE CET EQUIPMENT ET LES PRODUITS A ETRE EMPLOYES ET SUIVEZ LES PROCEDURES DE SECURITE DE VOTRE EMPLOYEUR.

LESEN SIE UND BEFOLGEN SIE DIE BETRIEBSANLEITUNG DER ANLAGE UND DEN ELEKTRODENEINSATZ DES HERSTELLERS. DIE UNFALLVERHÜTUNGSVORSCHRIFTEN DES ARBEITGEBERS SIND EBENFALLS ZU BEACHTEN.

● Keep your head out of fumes. ● Use ventilation or exhaust to remove fumes from breathing zone.	● Turn power off before servicing.	● Do not operate with panel open or guards off.	**WARNING**
● Los humos fuera de la zona de respiración. ● Mantenga la cabeza fuera de los humos. Utilice ventilación o aspiración para gases.	● Desconectar el cable de alimentación de poder de la máquina antes de iniciar cualquier servicio.	● No operar con panel abierto o guardas quitadas.	Spanish **AVISO DE PRECAUCION**
● Gardez la tête à l'écart des fumées. ● Utilisez un ventilateur ou un aspirateur pour ôter les fumées des zones de travail.	● Débranchez le courant avant l'entretien.	● N'opérez pas avec les panneaux ouverts ou avec les dispositifs de protection enlevés.	French **ATTENTION**
● Vermeiden Sie das Einatmen von Schweibrauch! ● Sorgen Sie für gute Be- und Entlüftung des Arbeitsplatzes!	● Strom vor Wartungsarbeiten abschalten! (Netzstrom völlig öffnen; Maschine anhalten!)	● Anlage nie ohne Schutzgehäuse oder Innenschutzverkleidung in Betrieb setzen!	German **WARNUNG**
● Mantenha seu rosto da fumaça. ● Use ventilação e exhaustão para remover fumo da zona respiratória.	● Não opere com as tampas removidas. ● Desligue a corrente antes de fazer serviço. ● Não toque as partes elétricas nuas.	● Mantenha-se afastado das partes moventes. ● Não opere com os paineis abertos ou guardas removidas.	Portuguese **ATENÇÃO**
● ヒュームから頭を離すようにして下さい。 ● 換気や排煙に十分留意して下さい。	● メンテナンス・サービスに取りかかる際には、まず電源スイッチを必ず切って下さい。	● パネルやカバーを取り外したままで機械操作をしないで下さい。	Japanese **注意事項**
● 頭部遠離煙霧。 ● 在呼吸區使用通風或排風器除煙。	● 維修前切斷電源。	● 儀表板打開或沒有安全罩時不準作業。	Chinese **警 告**
● 얼굴로부터 용접가스를 멀리하십시요. ● 호흡지역으로부터 용접가스를 제거하기 위해 가스제거기나 통풍기를 사용하십시요.	● 보수전에 전원을 차단하십시요.	● 판넬이 열린 상태로 작동치 마십시요.	Korean **위 험**
● ابعد رأسك بعيداً عن الدخان. ● استعمل التهوية أو جهاز ضغط الدخان للخارج لكي تبعد الدخان عن المنطقة التي تتنفس فيها.	● اقطع التيار الكهربائي قبل القيام بأية صيانة.	● لا تشغل هذا الجهاز اذا كانت الاغطية الحديدية الواقية ليست عليه.	Arabic **تحذير**

LEIA E COMPREENDA AS INSTRUÇÕES DO FABRICANTE PARA ESTE EQUIPAMENTO E AS PARTES DE USO, E SIGA AS PRÁTICAS DE SEGURANÇA DO EMPREGADOR.

使う機械や溶材のメーカーの指示書をよく読み、まず理解して下さい。そして貴社の安全規定に従って下さい。

請詳細閱讀並理解製造廠提供的説明以及應該使用的銀捍材料，並請遵守貴方的有関勞動保護規定。

이 제품에 동봉된 작업지침서를 숙지하시고 귀사의 작업자 안전수칙을 준수하시기 바랍니다.

اقرأ بتمعن وافهم تعليمات المصنع المنتج لهذه المعدات والمواد قبل استعمالها واتبع تعليمات الوقاية لصاحب العمل.

CUSTOMER ASSISTANCE POLICY

The business of The Lincoln Electric Company is manufacturing and selling high quality welding equipment, consumables, and cutting equipment. Our challenge is to meet the needs of our customers and to exceed their expectations. On occasion, purchasers may ask Lincoln Electric for advice or information about their use of our products. We respond to our customers based on the best information in our possession at that time. Lincoln Electric is not in a position to warrant or guarantee such advice, and assumes no liability, with respect to such information or advice. We expressly disclaim any warranty of any kind, including any warranty of fitness for any customer's particular purpose, with respect to such information or advice. As a matter of practical consideration, we also cannot assume any responsibility for updating or correcting any such information or advice once it has been given, nor does the provision of information or advice create, expand or alter any warranty with respect to the sale of our products.

Lincoln Electric is a responsive manufacturer, but the selection and use of specific products sold by Lincoln Electric is solely within the control of, and remains the sole responsibility of the customer. Many variables beyond the control of Lincoln Electric affect the results obtained in applying these types of fabrication methods and service requirements.

Subject to Change – This information is accurate to the best of our knowledge at the time of printing. Please refer to www.lincoln-electric.com for any updated information.

THE LINCOLN ELECTRIC COMPANY
22801 St. Clair Avenue • Cleveland, OH • 44117-1199 • U.S.A.
Phone: +1.216.481.8100 • www.lincolnelectric.com