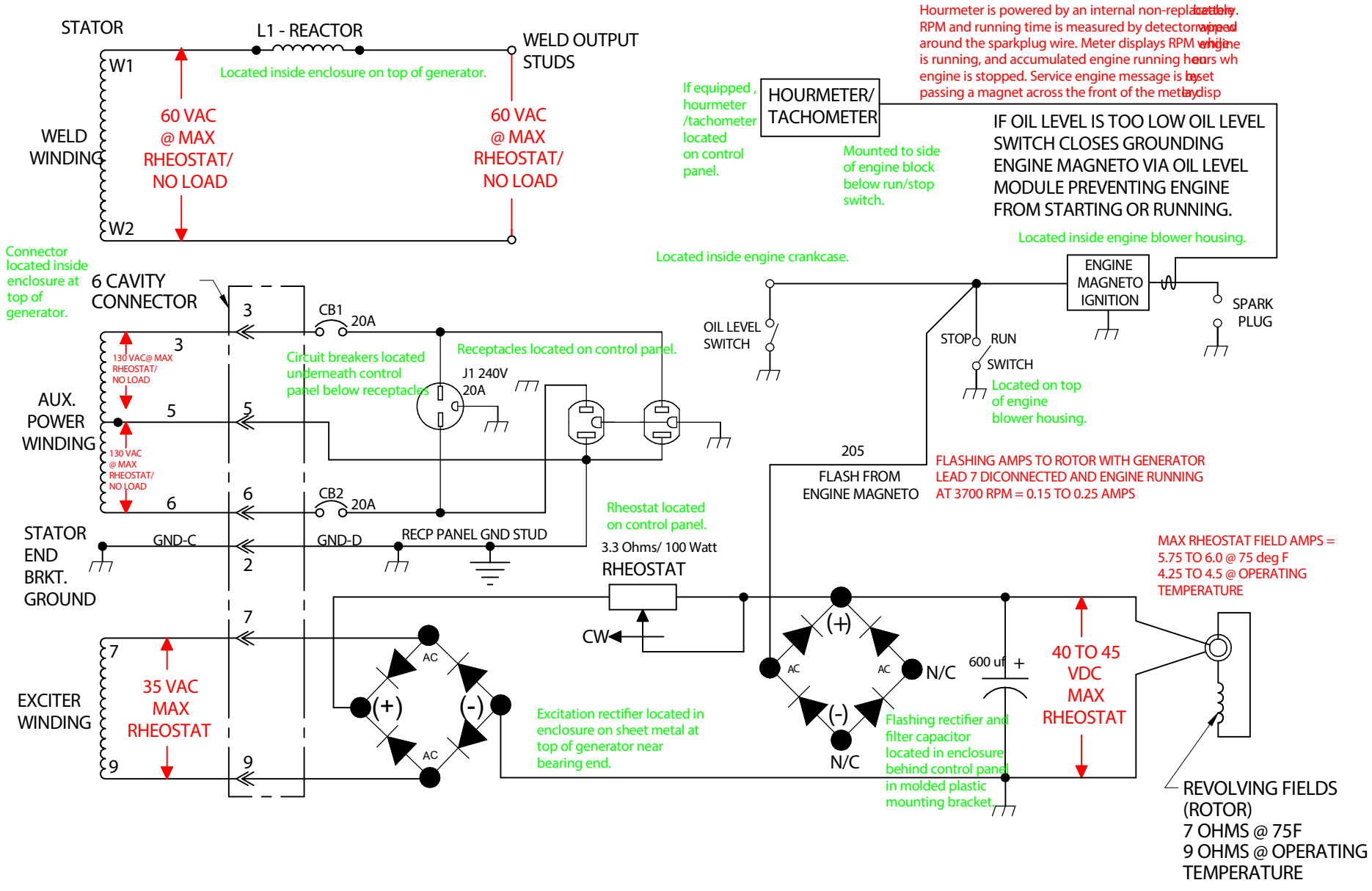POWER ARC 5500 (HONDA) MACHINE SCHEMATIC S26882 REV: A