FLEX FEED 74HT MACHINE SCHEMATIC G7620 REV: A

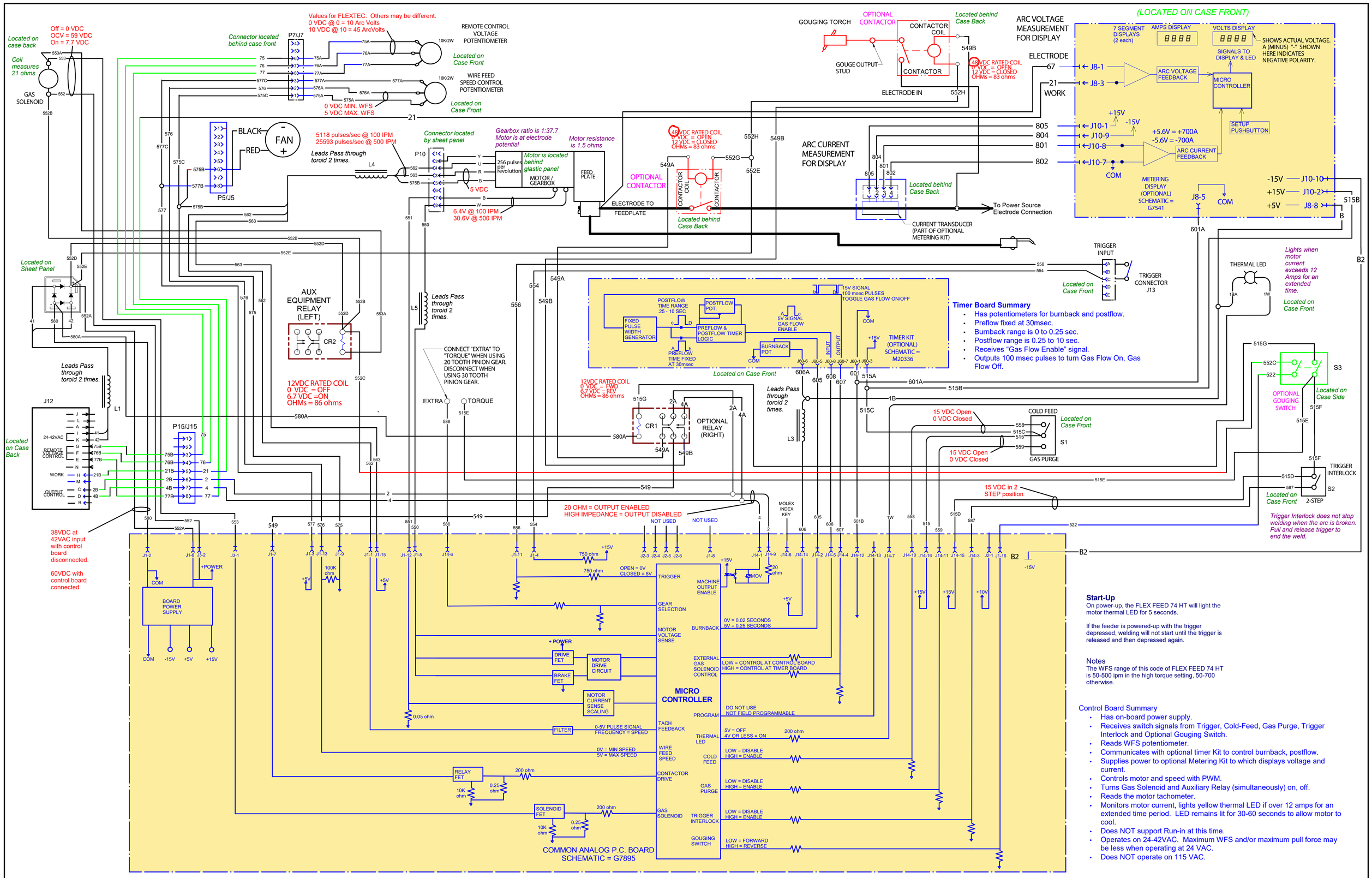

Timer Board Summary

- Has potentiometers for burnback and postflow.
- Preflow fixed at 30msec.
- Burnback range is 0 to 0.25 sec.
- Postflow range is 0.25 to 10 sec.
- Receives "Gas Flow Enable" signal.
- Outputs 100 msec pulses to turn Gas Flow On, Gas Flow Off.

Start-Up

On power-up, the FLEX FEED 74 HT will light the motor thermal LED for 5 seconds.

If the feeder is powered-up with the trigger depressed, welding will not start until the trigger is released and then depressed again.

Notes

The WFS range of this code of FLEX FEED 74 HT is 50-500 ipm in the high torque setting, 50-700 otherwise.

Control Board Summary

- Has on-board power supply.
- Receives switch signals from Trigger, Cold-Feed, Gas Purge, Trigger Interlock and Optional Gouging Switch.
- Reads WFS potentiometer.
- Communicates with optional timer Kit to control burnback, postflow.
- Supplies power to optional Metering Kit to which displays voltage and current.
- Controls motor and speed with PWM.
- Turns Gas Solenoid and Auxiliary Relay (simultaneously) on, off.
- Reads the motor tachometer.
- Monitors motor current, lights yellow thermal LED if over 12 amps for an extended time period. LED remains lit for 30-60 seconds to allow motor to cool.
- Does NOT support Run-in at this time.
- Operates on 24-42VAC. Maximum WFS and/or maximum pull force may be less when operating at 24 VAC.
- Does NOT operate on 115 VAC.