ROTATOR

ROTAMATIC
ST2 - ST6
ST15 - ST30

SAFETY INSTRUCTIONS FOR OPERATING AND MAINTENANCE

ISSUE : EN
REVISION : A
DATE : 10 - 2023

Instructions

REF: 8695 6422

Original instructions

LINCOLN ELECTRIC

Thank you very much for the trust you have shown by choosing this piece of equipment. It will give you trouble-free service if it is used and maintained as recommended.

Its design, component specifications and manufacturing are in accordance with applicable European directives.

Please refer to the CE declaration enclosed to identify the directives applicable to it.

The manufacturer shall not be liable for any combination of parts not recommended by it.

For your safety, please follow the non-limitative list of recommendations and obligations, a large part of which are included in the Labour Code.

Please inform your supplier if you find any error in this instruction manual.

Table of contents

INFORMATION

This technical literature is intended for the following machines or products:

- **ROTAMATIC ST2**
- **ROTAMATIC ST6**
- **ROTAMATIC ST15**
- **ROTAMATIC ST30**

This manual and the product with which it is associated refer to the applicable standards in force.

Please read this document carefully before you install, use or maintain the machine. Keep this document in a safe place for future reference. This document must follow the machine described if there is a change in ownership of the machine and accompany it up to demolition.

Display and pressure gauge:

Measurement instruments or displays of voltage, intensity, speed, accuracy etc. are to be considered as indicators, whether they are analogue or digital.

For operating instructions, adjustments, troubleshooting and spare parts, please refer to the special instructions for safe operating and maintenance.

In spite of all the measures applied, invisible residual risks may still remain.
Residual risks can be reduced if the safety instructions are observed, the machine is used as recommended and general service instructions are followed.

MEANING OF SYMBOLS

	Reading the manual/instructions is mandatory.		Indicates a hazard.
	Mandatory use of safety shoes.		Warning of an electricity risk or hazard.
	Mandatory use of hearing protection.		Warning of a risk or hazard due to an obstacle on the floor.
	Mandatory use of a safety helmet.		Warning of a risk or hazard of falling with a level change.
	Mandatory use of safety gloves.		Warning of a risk or hazard due to suspended loads.
	Mandatory use of safety glasses.		Warning of a risk or hazard due to a hot surface.
	Mandatory use of a safety visor.		Warning of a risk or hazard due to moving mechanical parts.
	Mandatory use of safety clothing.		Warning of a risk or hazard due to a closing movement of mechanical parts of a machine.
	Make sure you clean the working zone.		Warning of a risk or hazard due to laser radiation.
	Mandatory use of breathing protection.		Warning of a risk or hazard due to an obstacle at a height.
	Visual inspection required.		Warning of a risk or hazard due to the presence of a pointed part.
	Indicates a lubrication operation.		Wearers of pacemakers may not be admitted in the designated area.
	Requires maintenance action.		

A - IDENTIFICATION

Please note the serial number of your equipment in the box below.
The information below should be provided in all correspondence.

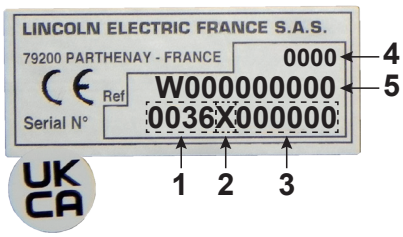

1	Manufacturing plant code	**4**	Year of manufacture
2	Year of manufacture code	**5**	Type of product
3	product serial number		

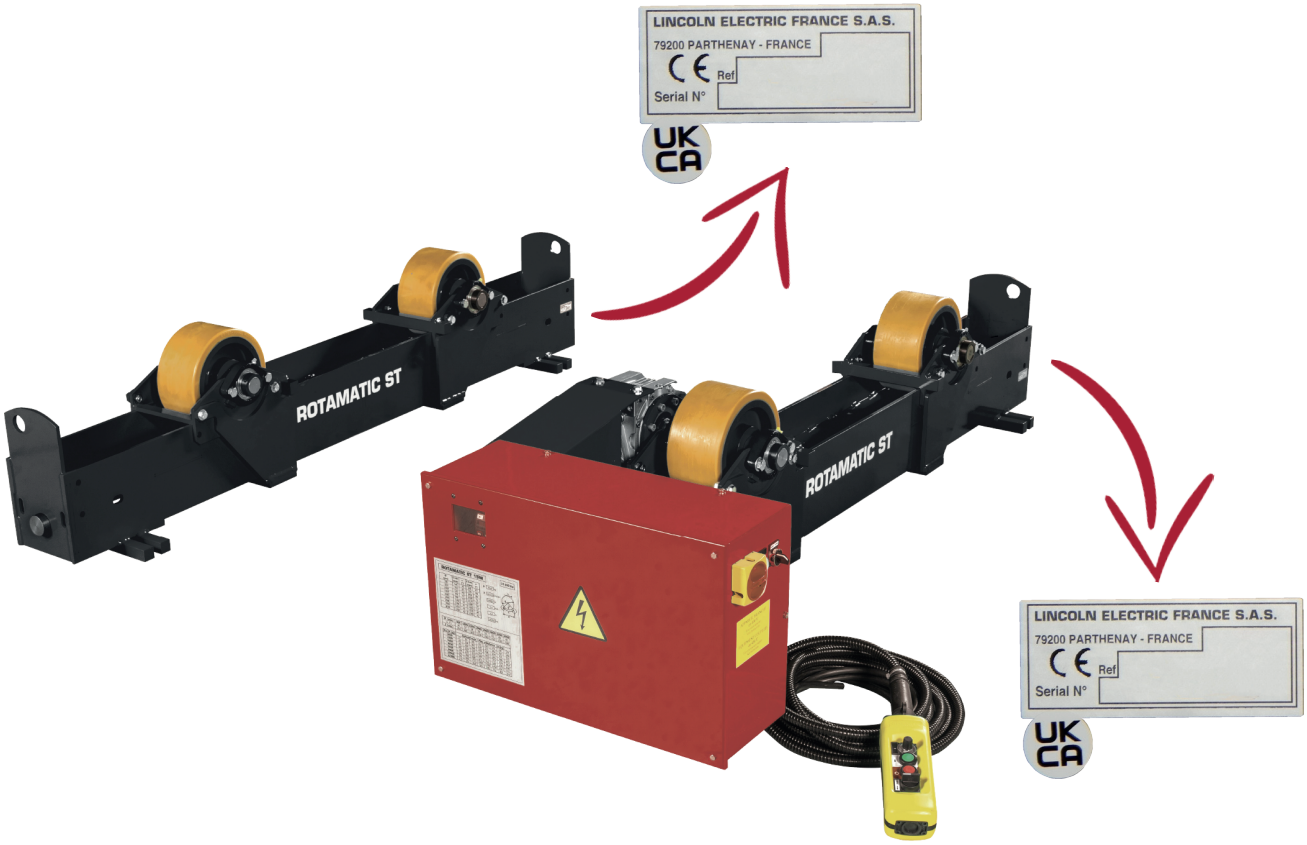

For general safety instructions, please refer to the specific manual supplied with the equipment.

1 - Limits of use of the machine or the installation

The limits of use of the machine (or installation) are provided in the different documents; please review them carefully before starting to use the machine (or installation).

For safety reasons, and in the light of our current knowledge of customer processes, the working area may be occupied only by one individual.

The machine (or installation) may only be operated by a single person above the age of 18 and trained in operating and use-related risks.

The machine (or installation) may only be used for welding applications; any other use of the machine is forbidden.

The machine (or installation) is designed for indoor use.
It may not be used outdoors.

The workshop must be adequately lit and ventilated.

The dimensions and weights of the workpieces must be appropriate for the machine (or installation). Do not exceed the permissible loads, torques and tangential forces or the minimum and maximum diameters of shells.

Loading and unloading may only be carried out outside the welding cycle.

The energy supply must imperatively comply with recommendations.
The customer must supply and install a device for isolating each source of energy (electricity, air, gas and water). The devices must be clearly identified. They must be of the locking type.

The machine (or installation) is designed for professional use.

Before use, the operator must make sure that there is no risk of collision with personnel.

The use of Personal Protective Equipment (PPE) and work clothing covering the body is mandatory in the work area. Do not wear a tie and keep your hair tied back securely.

Make sure that no part of the machine can come within less than 500 mm from an obstacle.
Important: the operator passage way must absolutely be clear over a minimum width of 800 mm.
The floor should be marked out.

While accessing the marked area, a worker could be hit by a part of the installation.

For any extended absence, the operator must shut off the supply of utilities (electricity and fluids).

Maintenance may only be carried out by experienced personnel who are trained in machine-related risks.

Machine maintenance must be carried out with all the energy supplies switched off.
The disconnection and padlocking of all energy sources is mandatory.

Access to the machine (or installation) must be left free for maintenance (e.g. no workpiece etc.).

The frequency of such maintenance is indicated for production in one work shift per day (i.e. 8 hours a day).

Visually inspect the overall condition of the installation and the working area twice a shift, or with every change of production.

The maintenance schedule must absolutely be followed.
We recommend putting in place a traced system for tracking all your maintenance operations.

All maintenance must be carried out by specialised personnel who have read and understood these instructions.

Electricity technician
Qualified operator with the ability to work in normal conditions on electrical parts for regulation, maintenance and repair.

Mechanical technician
Specialised technician authorised to carry out complex and exceptional mechanical operations.

Carry out a dry test run of the rotation movement.

Do not drop loads on the equipment.

Make sure that the working of the equipment is not hindered by tools and/or objects left close to the rotating part or by its appendages, which could strike fixed elements (ground, frame, posts).

Make sure that the power and control conductors of the machine are in good condition.

Maintain the centre to centre distance of the rollers depending on the diameter of the shell.

No object is to be placed on the rolling tracks.

Before using the machine. Make sure that the guard covers of the electrical and mechanical parts are in place before starting up the equipment.
All guard covers must be screwed in.

Clean the working area from time to time.

If the equipment is used for welding, make sure that the ground of the power source is connected to the piece before you start welding.

Never modify the machine.
The rotator is not designed for anchoring lifting equipment.

2 - Residual risks

Based on the results of the risk assessment, a few elements have emerged where there was no “technical” solution for eliminating risk or making it negligible.

In spite of all the care that has gone into the designing of our machines (or installations), some risk areas remain. To control these risks, the customer must pay particular attention to them, ensure that the instructions are applied and define any additional measures that may be necessary in view of its own internal operating procedures.

Therefore, you will find below a guidance list of residual risks.

Training of operators in safety and in the use of the machine from their operating position will better address these residual risks.

We recommend putting place workstation instructions that remind users of the presence or otherwise of residual risks in the working area.

2.1 - Residual risks - General

☛ Environment risk - slipping and/or falling

The working and safety area must be clear of all obstacles.

The working area must be kept clean and cleaned regularly.

The machine must undergo periodic maintenance (see maintenance instructions of each piece of equipment).

Waste consumables must be cleaned.

The operator must pay special attention to cables and rolling tracks on the ground.

The operator must use the necessary personal protective equipment (helmet, gloves, safety shoes, mask and work clothing).

Falling from heights:

In order to be protected from falling from heights and for access to high parts, the operator must use access means that comply with applicable standards.

For all work at heights, the use of personal protective equipment (helmet, gloves, safety shoes, mask, ear muffs and harness) is indispensable.

For all work at heights, the operator must be trained in the use of means for accessing high locations.

☛ Mechanical risk - Impacts, shearing, crushing

The operator may not wear loose clothing or a tie, must have their hair tied back and use personal protective equipment (helmet, gloves, safety shoes, mask and work clothing).

The operator must make sure that nobody else is close to the machine before starting.

The operator’s working position is before the control console.

The machine safety areas must not be crossed.

The operator must be trained in the use of the machine, and all personnel must be aware of residual risks.

Catching between an obstacle and the machine - Access to a moving part.

The operator must use personal protective equipment, (helmet, gloves, safety shoes, mask and work clothing).

The operator’s working position is before the control console.

The operator must make sure nobody is present in the machine working area or safety area before using it.

The operator must make sure that all the machine guards are in place before using it.

The operator must be trained in the use of the machine, and all personnel must be aware of residual risks.

Anchoring failure of handling equipment

The machine may not be modified.

The machine is not designed for anchoring lifting equipment.

Any change in the machine location must be made by **Lincoln Electric** or authorised personnel.

Presence of a person under the load

The operator must be trained and approved for the use of handling equipment.

The operator must be trained in the use of the machine, and all personnel must be aware of residual risks.

☛ **Mechanical risk - Puncturing or piercing**

The use of personal protective equipment (helmet, gloves, safety shoes, mask, ear muffs) is indispensable.

The operator must be trained in the use of the machine and all personnel must be aware of residual risks.

☛ **Thermal risk - Burns**

Part of the body in contact with a hot part (torch/workpiece etc.)

The use of personal protective equipment (helmet, gloves, safety shoes, mask, ear muffs) is indispensable.

The operator must be trained in the use of the machine and all personnel must be aware of residual risks.

☛ **Noise risk - Fatigue**

Process noise

The use of personal protective equipment (helmet, gloves, safety shoes, mask, ear muffs) is indispensable.

The operator must be trained in the use of the machine and all personnel must be aware of residual risks.

C - DESCRIPTION

1 - Description

- **ROTAMATIC ST** rotators are designed for rotating cylindrical pieces with variable diameters and weights, depending on their range.
- Each rotator is made of a low-floor frame and rollers that may or may not be powered, with adjustable spacing.
- The powered version of the rotator has an electrical cabinet.
- It also has a remote control for both rotation directions, and a potentiometer for speed variation.
- As standard, powered rotators make it possible to automatically start rotator operation with the start of welding (simple external contact).
- As standard, powered rotators display the linear speed in cm/min on the variable drive display in the cabinet.
- The spacing of the rollers is adjustable by means of compound screws (except **ROTAMATIC ST2**).

The range of:

- **ROTAMATIC ST2** is capable of rotating shells with weights less than or equal to 2 tonnes.
- **ROTAMATIC ST6** is capable of rotating shells with weights less than or equal to 6 tonnes.
- **ROTAMATIC ST15** is capable of rotating shells with weights less than or equal to 15 tonnes.
- **ROTAMATIC ST30** is capable of rotating shells with weights less than or equal to 30 tonnes.

There are four categories of **ROTAMATIC** rotators:

- **F**: Rotator with no motor drive (idle rollers)
- **M**: Single powered rotator
- **MT**: Single powered rotator fitted with a pressure roller for setting small shells (diameter from 30 mm) for increased adhesion (only with **ROTAMATIC ST 2**).
- **W**: Double powered rotator (for workpieces with larger unbalance)

2 - ROTAMATIC

2.1 ROTAMATIC ST2

 **ROTAMATIC ST 2M** Single powered version Part number: W000315289	 **ROTAMATIC ST 2W** Double powered version Part number: W000315288
 **ROTAMATIC ST 2MT** Single powered version for tubes Part number: W000315290	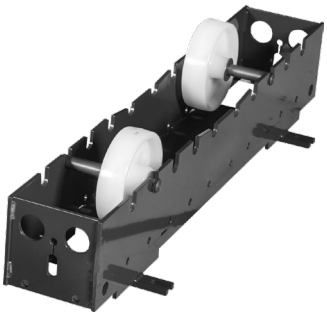 **ROTAMATIC ST 2F** Version with no motor drive (idler) Part number: W000315291

2.2 ROTAMATIC ST6

ROTAMATIC ST 6M
Single powered version
Part number: W000315297

ROTAMATIC ST 6W
Double powered version
Part number: W000315296

ROTAMATIC ST 6F
Version with no motor drive (idler)
Part number: W000315298

2.3 ROTAMATIC ST15

ROTAMATIC ST 15M
Single powered version
Part number: W000315304

ROTAMATIC ST 15W
Double powered version
Part number: W000315303

ROTAMATIC ST 15F
Version with no motor drive (idler)
Part number: W000315305

2.4 ROTAMATIC ST30

 **ROTAMATIC ST 30W** Double powered version Part number: W000315309	 **ROTAMATIC ST 30F** Version with no motor drive (idler) Part number: W000315310

2.5 Accessories

 Pedal Part number: W000273453	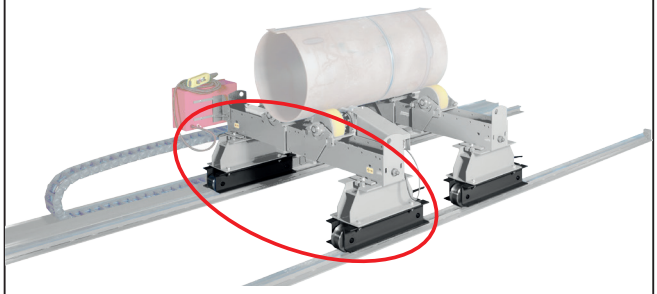 Truck assembly for one base **ROTAMATIC ST6 - ST15 - ST30** Part number: W000272574
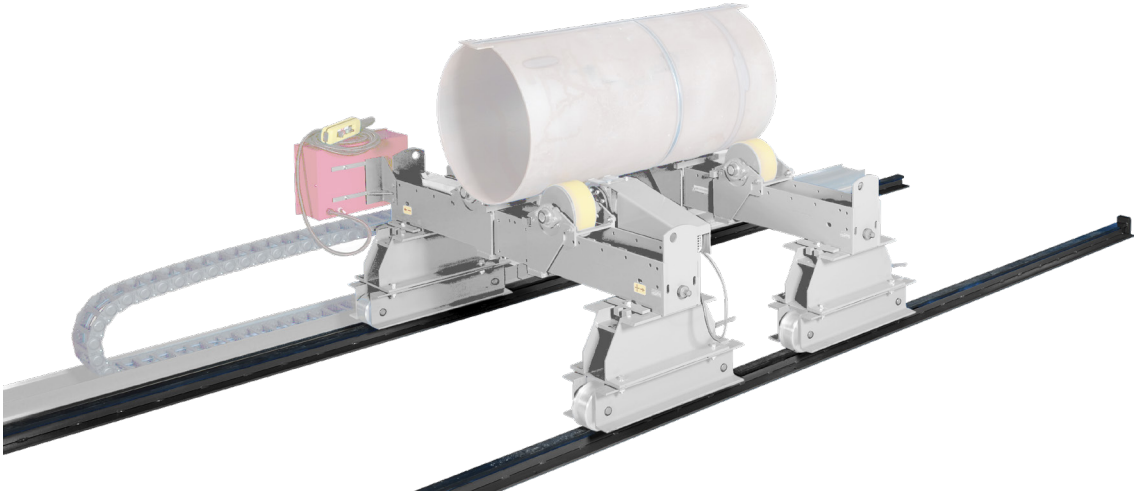 Rail, 6 metres Part number: W000315250	Rail, 3 metres Part number: W000215251

The following are supplied with all models:

- *Wired remote control*
  It is 5 metres long and is used to control the **ROTAMATIC**, particularly:
  - adjusting the rotation speed
  - starting up
  - choice of control location (local/remote)
  - rotation direction
  - emergency stop

- *Automatic control*
  It is used to make the powered rotator start automatically with the welding start order (simple external contact) while keeping the settings of the **ROTAMATIC**.
  - rotation direction selection
  - setpoint 0-10V

- *Display*
  It displays the linear speed in cm/min using the variable drive display, which is present in the box. A display window is provided on the front of the electrical cabinet.

The optional features are:

- *Pedal kit (option alone, W000273453)*
  The pedal kit makes the powered rotator start when the operator keeps the pedal pressed down.

- *Truck and travelling path*
  The truck moves a **ROTAMATIC** base on the rails with or without the workpiece. It may be manual or powered. This option includes two supports (left and right), which move the **ROTAMATIC** transversally on a rail.

- *Anti-creep device (on request)*
  The manual anti-creep device allows the piece to rotate with no lateral creep.

- *Steel roller (on request)*
  This option makes it possible to rotate a pre-heated shell.
  It is required when the temperature of the workpiece is higher than 70°c.

Other models are available (on request):

- *TIG-Plasma regulation*
  This option precisely regulates the rotation speed of the rotator to +/-1%. This option is required when the rotator is used along with a TIG or plasma welding installation.

- *5000 PPR encoder*
  This option precisely measures the distance covered by the shell, using an encoder placed on the centre line of the rollers.

- *Setpoint ± 10 volts (on request)*
  This option controls the direction and speed of operation of the rotator through an external ± 10V setpoint.

	Description	Part number
ROTAMATIC ST 2M	ROTAMATIC ST 2M	W000315289
	ROTAMATIC ST 2M ADR	W000272453
	ROTAMATIC ST 2M ADRC	W000272454
ROTAMATIC ST 2MT	ROTAMATIC ST 2MT	W000315290
	ROTAMATIC ST 2MT ADR	W000272457
	ROTAMATIC ST 2MT ADRC	W000272458
ROTAMATIC ST 2W	ROTAMATIC ST 2W	W000315288
	ROTAMATIC ST 2W ADR	W000272461
	ROTAMATIC ST 2W ADRC	W000272462
ROTAMATIC ST 6M	ROTAMATIC ST 6M	W000315297
	ROTAMATIC ST 6M ADR	W000272464
	ROTAMATIC ST 6M ADRC	W000272466
ROTAMATIC ST 6W	ROTAMATIC ST 6W	W000315296
	ROTAMATIC ST 6W ADR	W000272469
	ROTAMATIC ST 6W ADRC	W000272470
ROTAMATIC ST 15M	ROTAMATIC ST 15M	W000315304
	ROTAMATIC ST 15M ADR	W000272473
	ROTAMATIC ST 15M ADRC	W000272474
ROTAMATIC ST 15W	ROTAMATIC ST 15W	W000315303
	ROTAMATIC ST 15W ADR	W000272477
	ROTAMATIC ST 15W ADRC	W000272478
ROTAMATIC ST 30W	ROTAMATIC ST 30W	W000315309
	ROTAMATIC ST 30W ADR	W000272481
	ROTAMATIC ST 30W ADRC	W000272482

ADR: Model with TIG - Plasma regulation

ADRC: Model with TIG - Plasma regulation + 500 PPR encoder

General characteristics:

		Rotation speed cm/min	Permissible shell diameter mm	Maximum driven load (1 powered + 1 idle) kg	Maximum supported load (per section) kg	Tangential force (max. without starting) daN
ROTAMATIC ST2	MT	12 - 120	30 - 2500	2000	1000	144
	M					144
	W					288
	F					
ROTAMATIC ST6	M	12 - 120	300 - 3500	6000	3000	264
	W					528
	F					
ROTAMATIC ST15	M	12 - 120	300 - 4000	15000	7500	608
	W					1216
	F					
ROTAMATIC ST30	W	12 - 120	350 - 4500	30000	15000	1886
	F					

Characteristics of rollers:

		Roller spacing mm	Roller diameter mm	Roller width mm	Roller material
ROTAMATIC ST2	MT	90 - 690	150	50	Polyurethane
	M				
	W				
	F				Polyamide
ROTAMATIC ST6	M	320 - 1370	250	75	Polyurethane
	W				
	F				
ROTAMATIC ST15	M	340 - 1540	250	126	Polyurethane
	W				
	F				
ROTAMATIC ST30	W	460 - 1820	350	166	Polyurethane
	F				

The piece must be rotating and its temperature must not exceed 60 to 70°C.

Power supply characteristics

		Power supply voltage Volt (V)	Frequency Hertz (Hz)	Maximum current consumption Ampere (A)	Power kVA
ROTAMATIC ST2	MT	3 x 400	50/60	1.7	2.5
	M				
	W				
	F				
ROTAMATIC ST6	M	3 x 400	50/60	3.6	2.5
	W				
	F				
ROTAMATIC ST15	M	3 x 400	50/60	3.6	2.5
	W				
	F				
ROTAMATIC ST30	W	3 x 400	50/60	5.5	3.8
	F				

Packing:

		Weight net kg	Weight gross kg	Packing (complete with ROTAMATIC) Length mm	Width mm	Height mm
ROTAMATIC ST2	MT	80	117	1757	714	670
	M	69	106	1757	714	670
	W	85	122			
	F	19	29	900	564	480
ROTAMATIC ST6	M	160	209	2387	1004	690
	W	194	243			
	F	96	126	1885	714	670
ROTAMATIC ST15	M	280	328	2472.5	1004	690
	W	316	364			
	F	214	244	2055	714	670
ROTAMATIC ST30	W	492	543	2787	1004	690
	F	339	370	2360	714	683

4.1 ROTAMATIC ST2

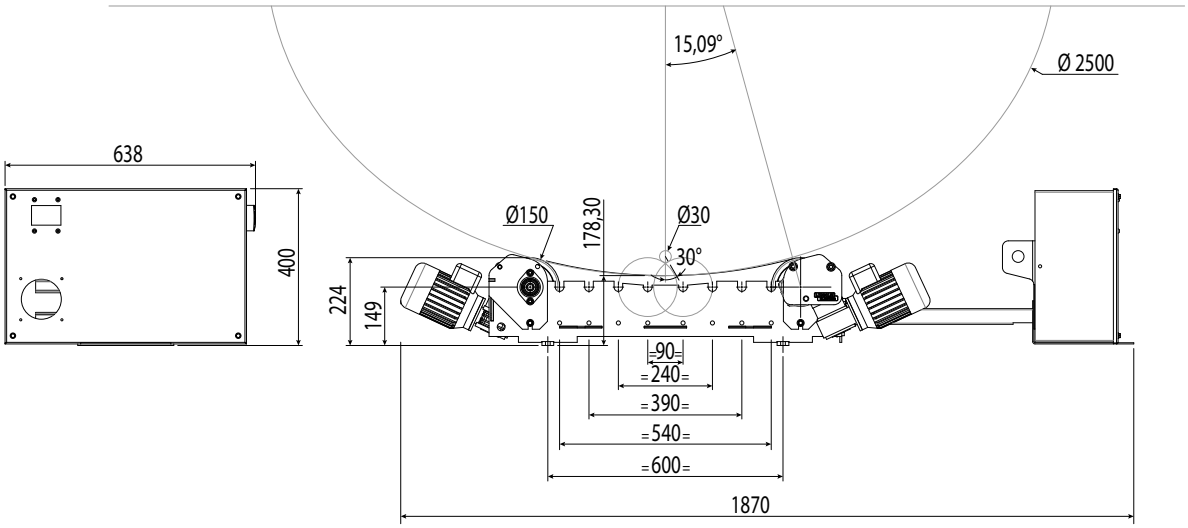

ROTAMATIC ST2 W

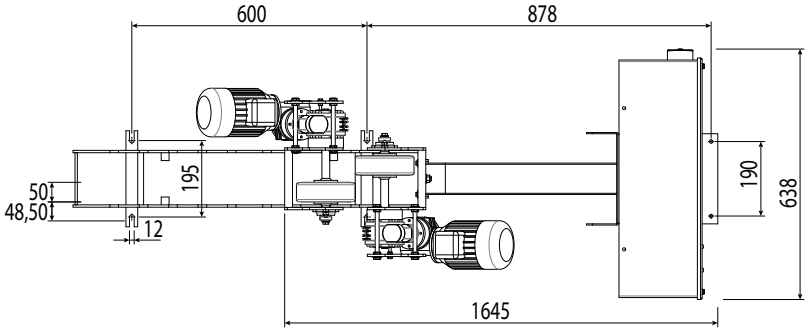

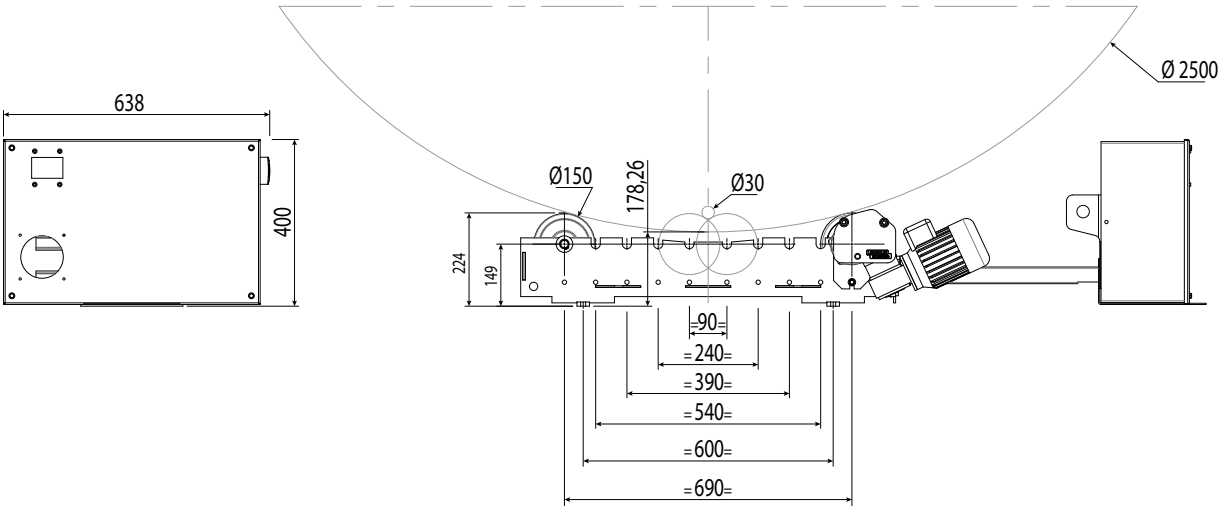

ROTAMATIC ST2 M

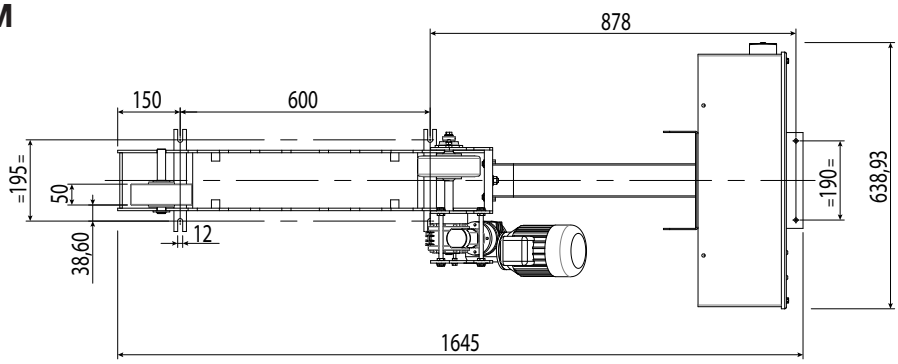

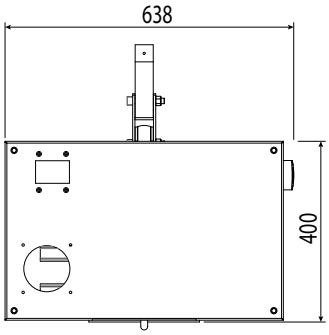

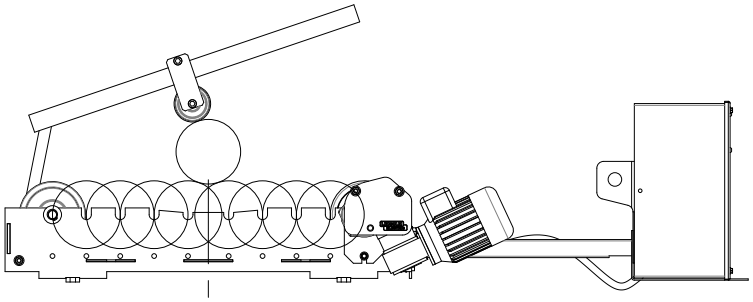

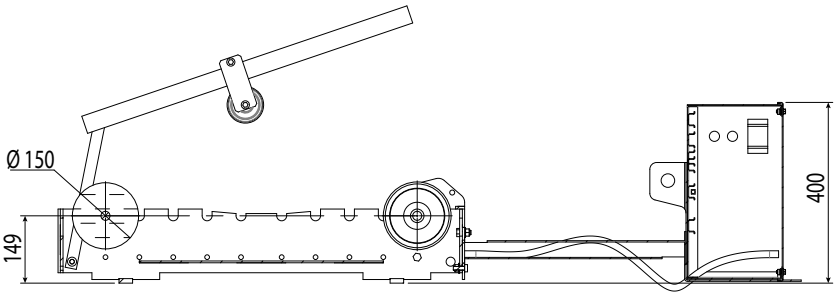

ROTAMATIC ST2 MT

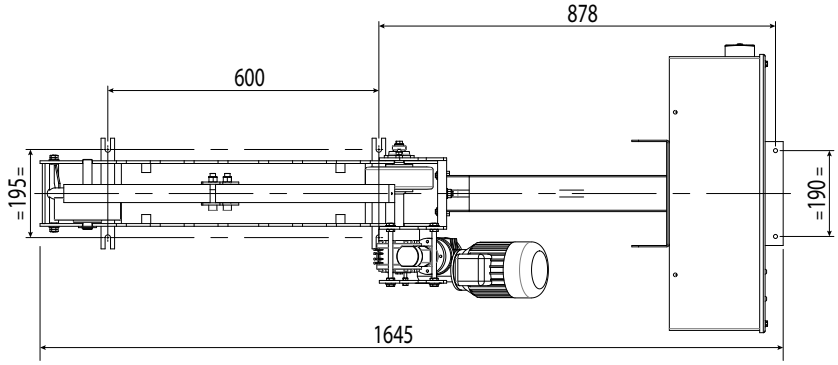

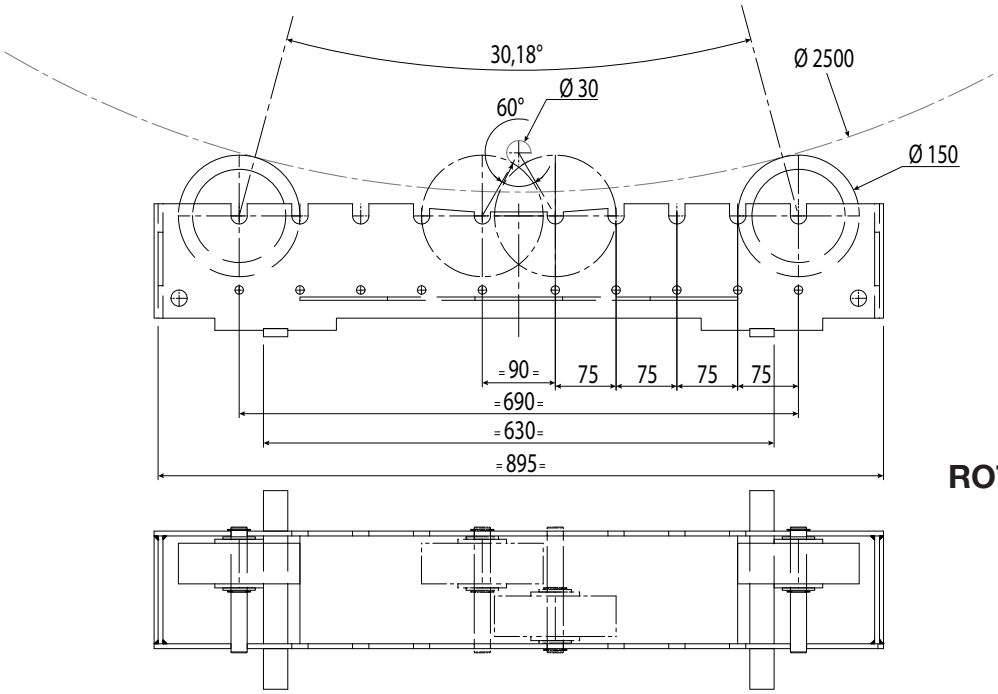

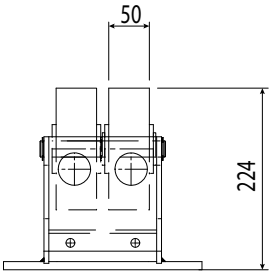

ROTAMATIC ST2 F

4.2 ROTAMATIC ST6

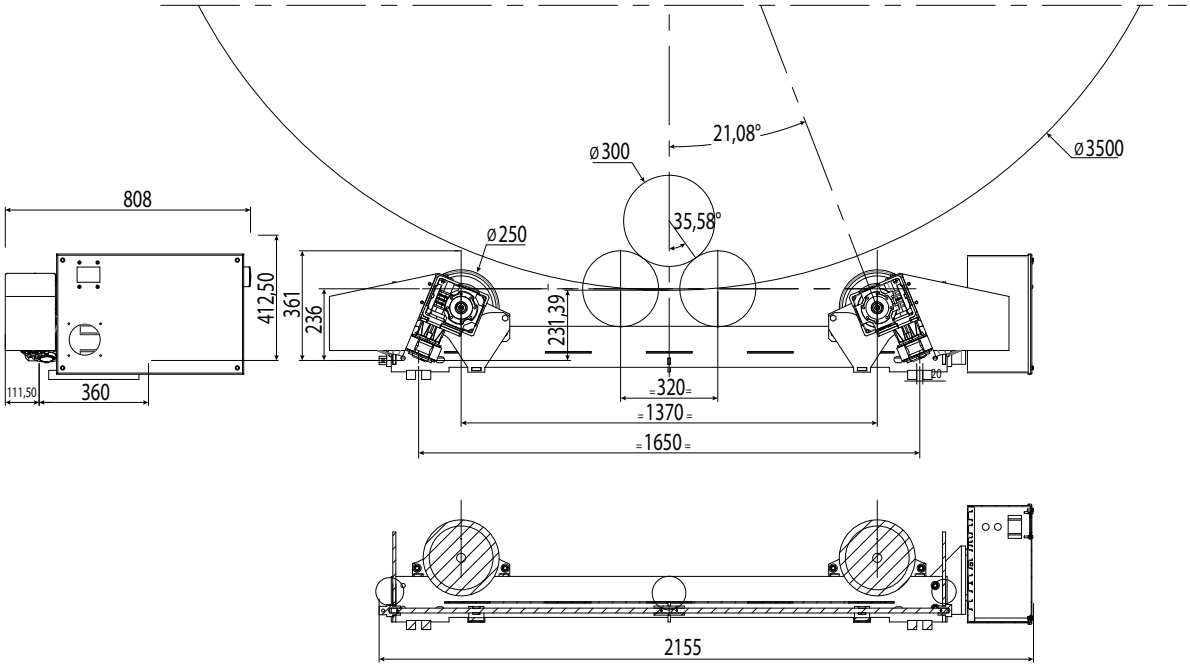

ROTAMATIC ST6 W

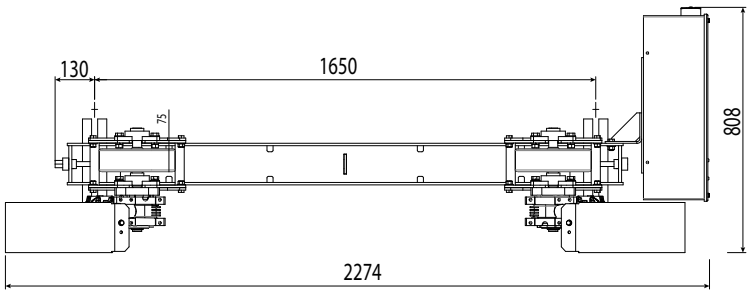

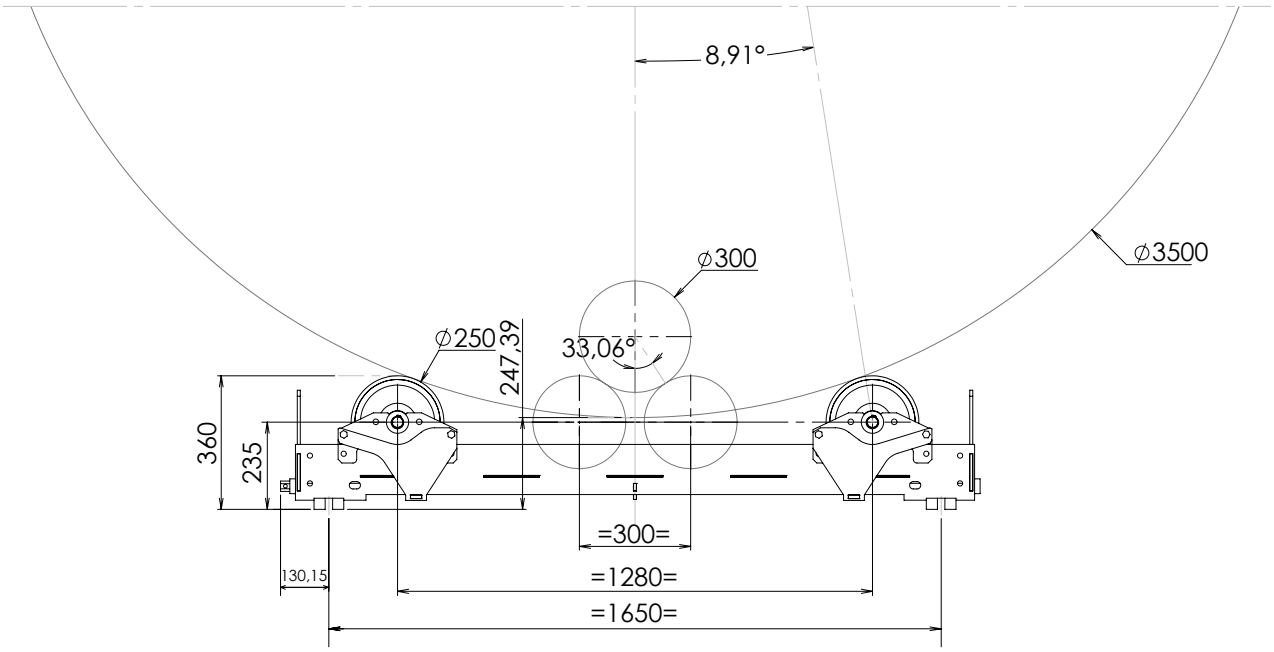

ROTAMATIC ST6 F

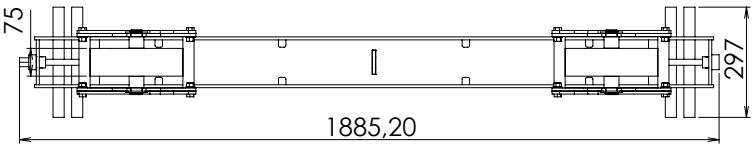

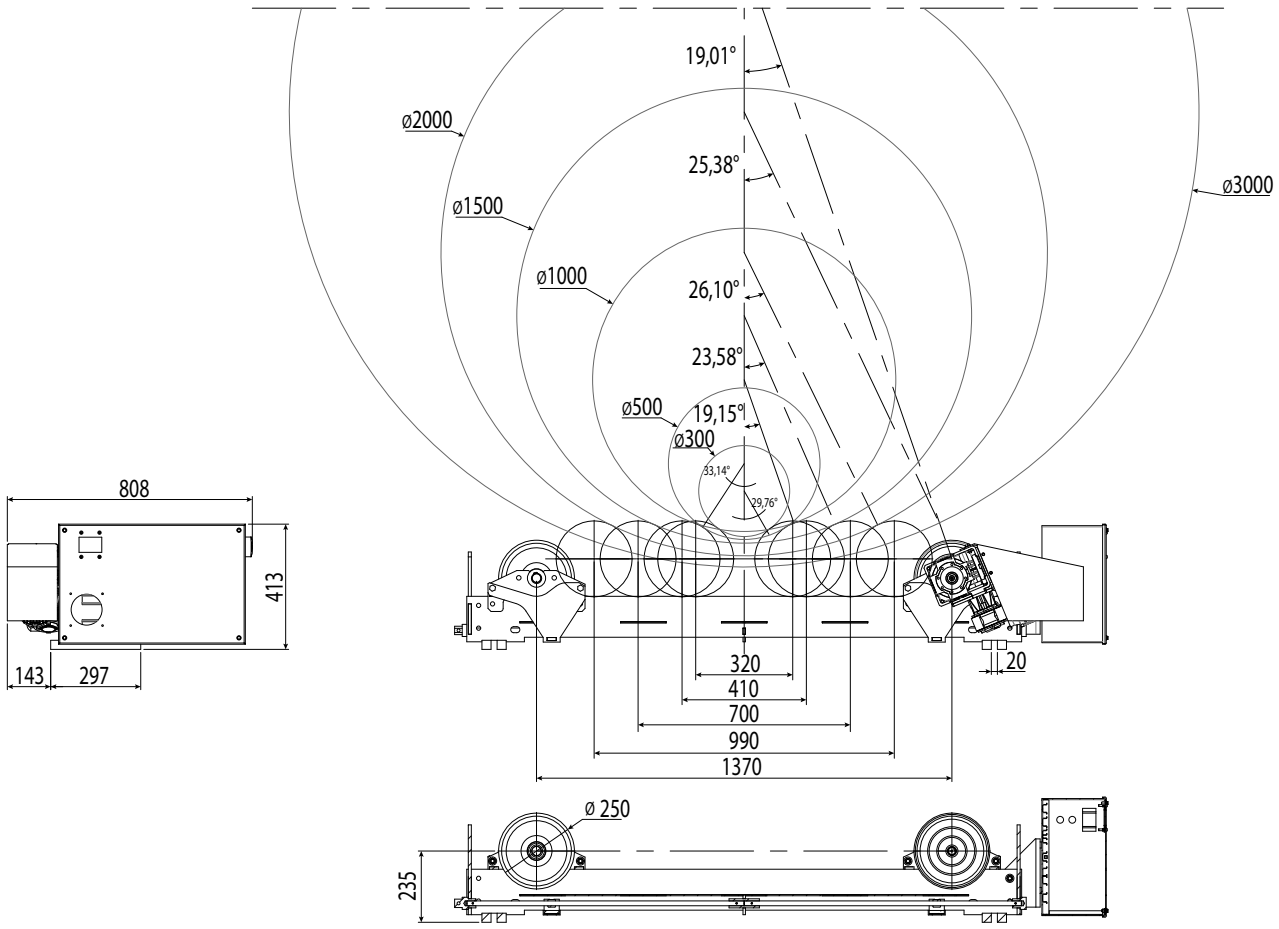

ROTAMATIC ST6 M

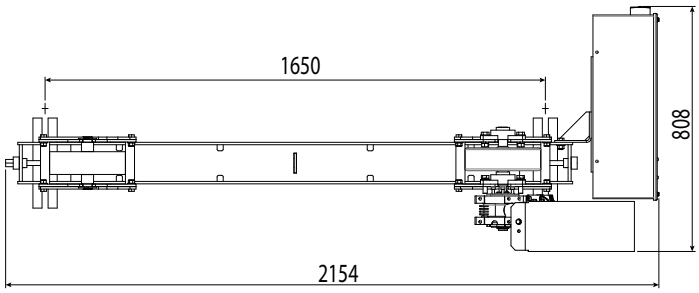

4.3 ROTAMATIC ST15

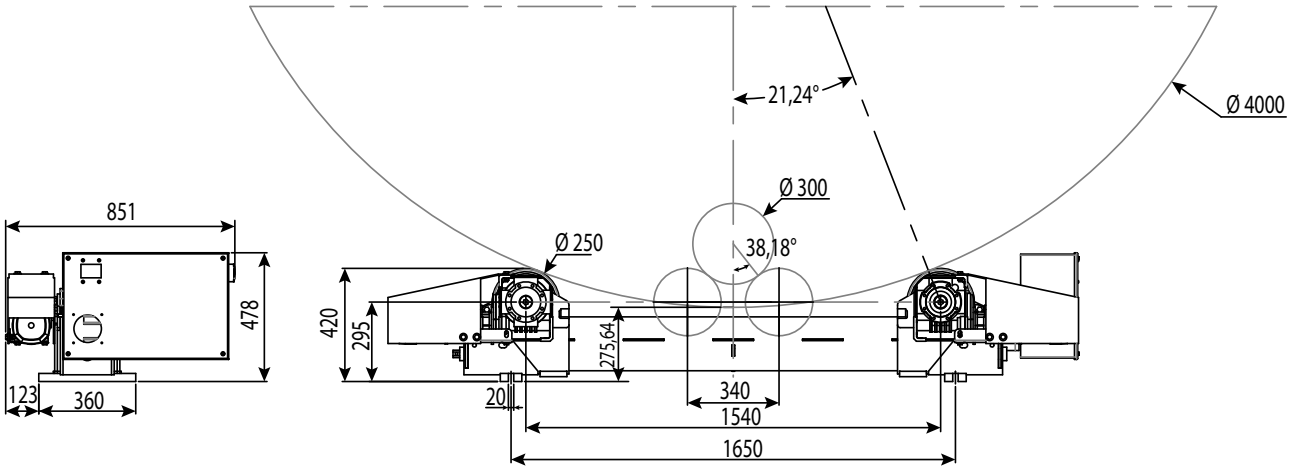

ROTAMATIC ST15 W

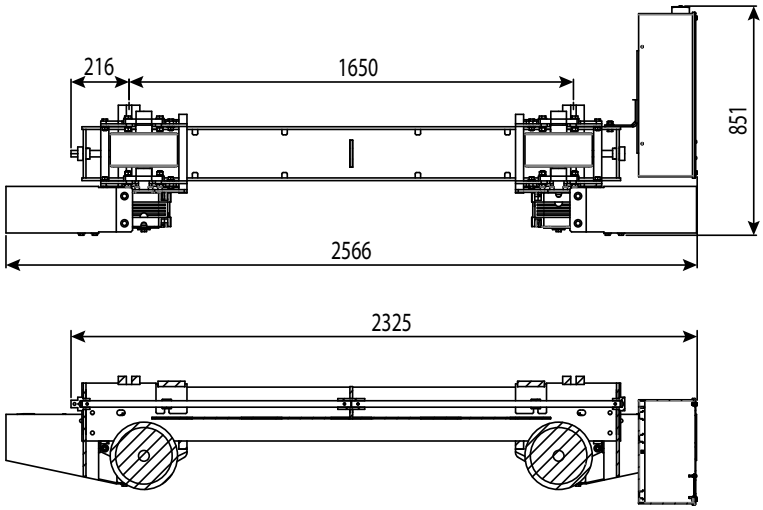

ROTAMATIC ST15 F

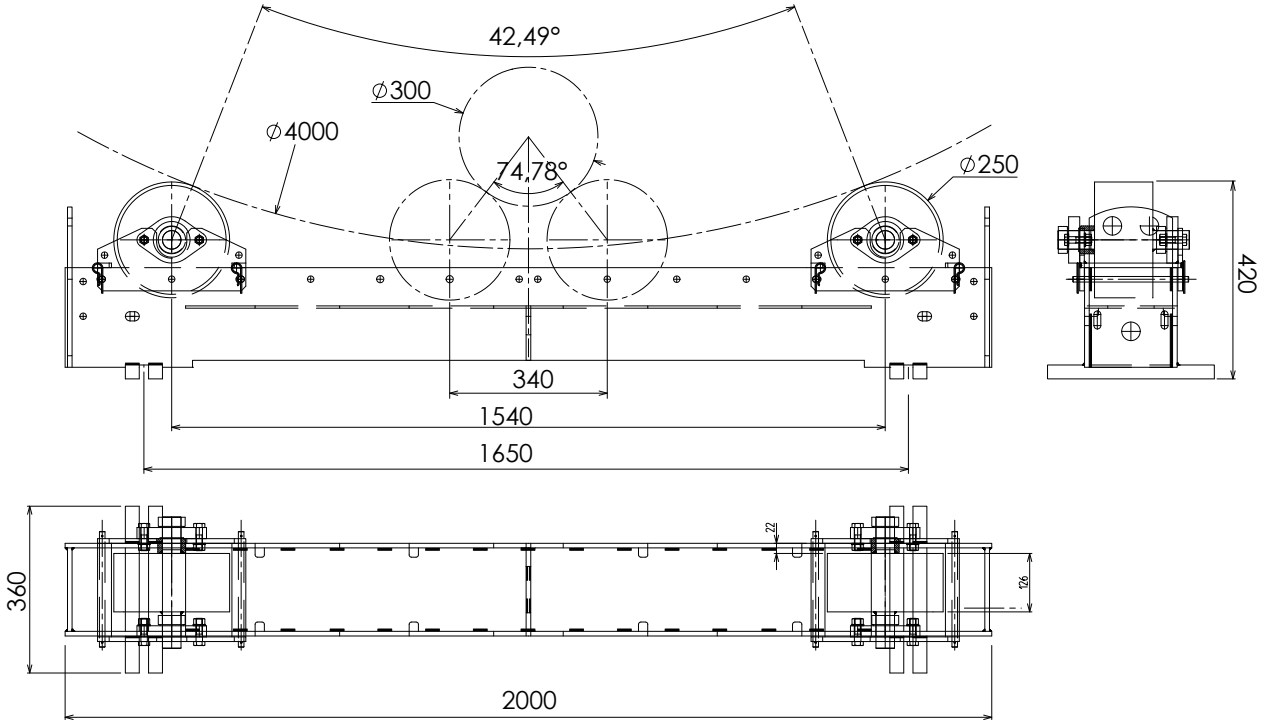

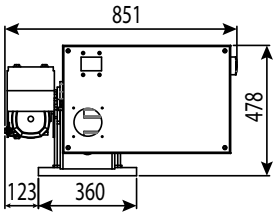

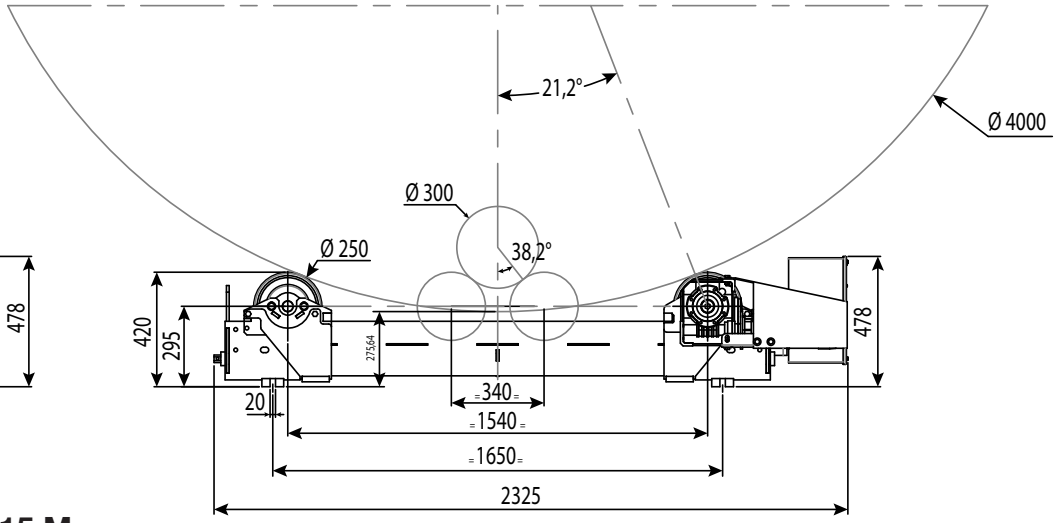

ROTAMATIC ST15 M

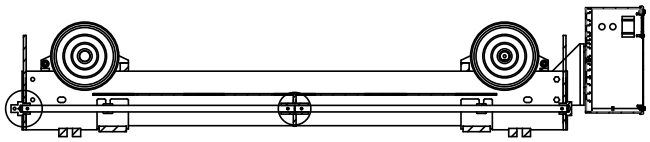

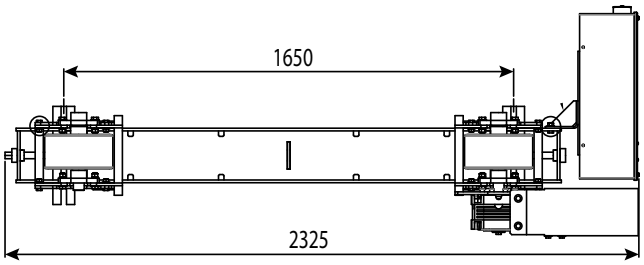

4.4 ROTAMATIC ST30

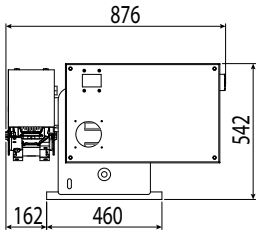

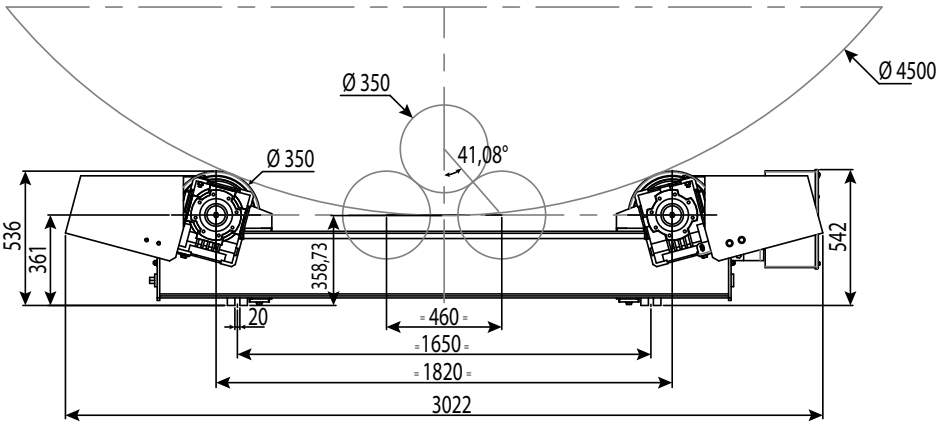

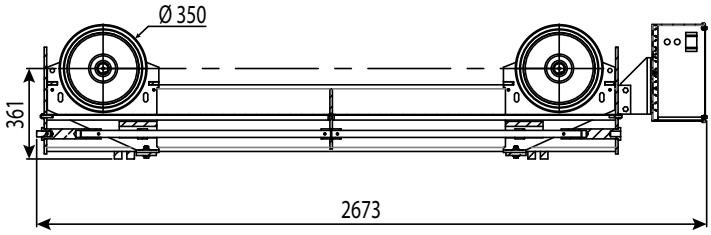

ROTAMATIC ST30 W

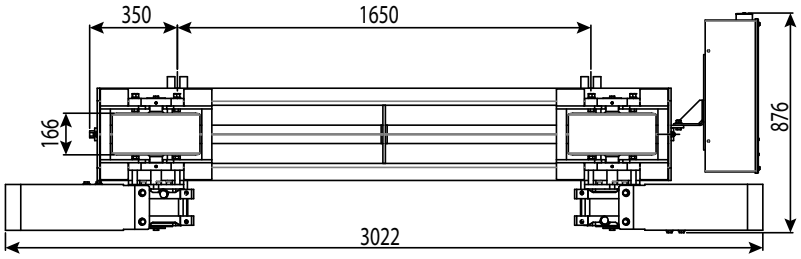

ROTAMATIC ST30 F

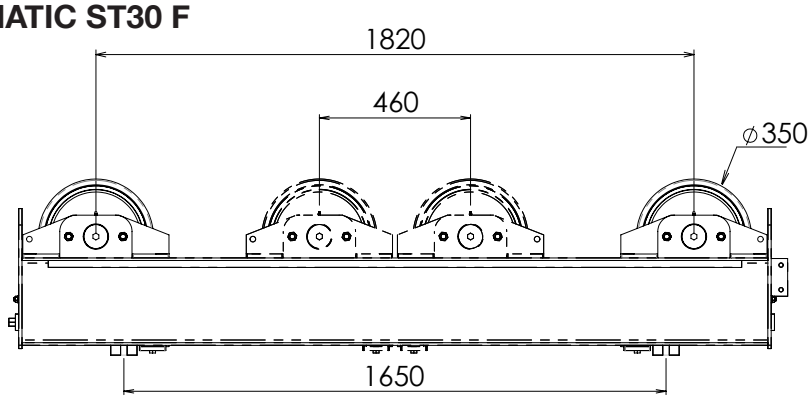

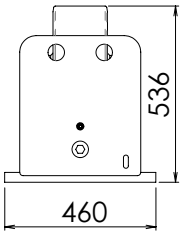

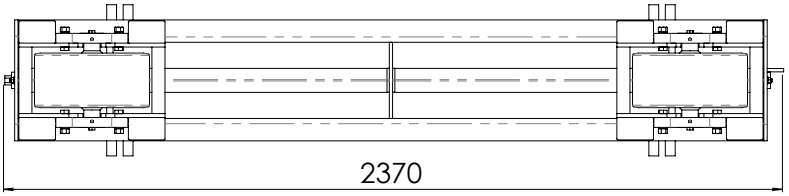

1 - Handling the ROTAMATIC

1.Sling the **ROTAMATIC ST** in its wooden packaging in the manner indicated in the drawing
2.Unpack the **ROTAMATIC ST** from its delivery packaging.
3.Sling the **ROTAMATIC ST**, always using the opposite holes at each end.

You can use a lift truck to move the wooden packaging with its ROTAMATIC.

1.1 ROTAMATIC ST2

ST2F = 29 daN

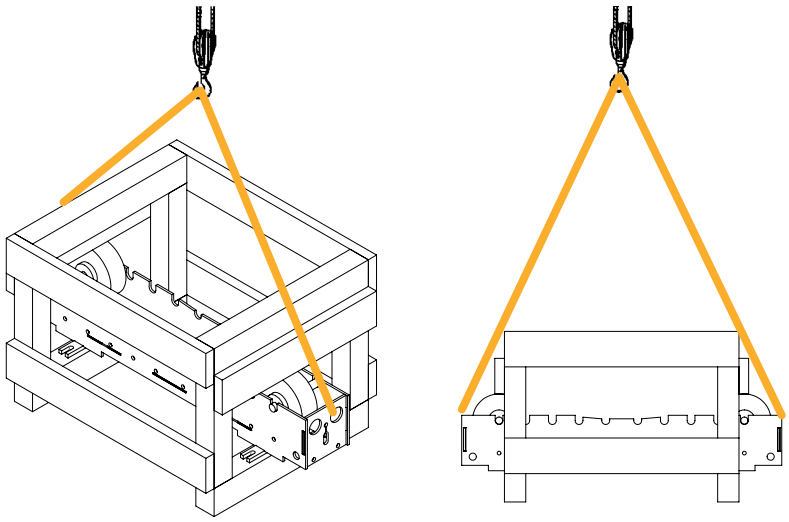

ST2F = 19 daN

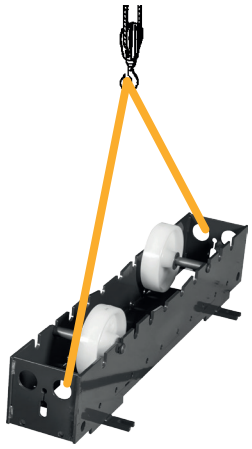

ST2W = 122 daN
ST2M = 106 daN

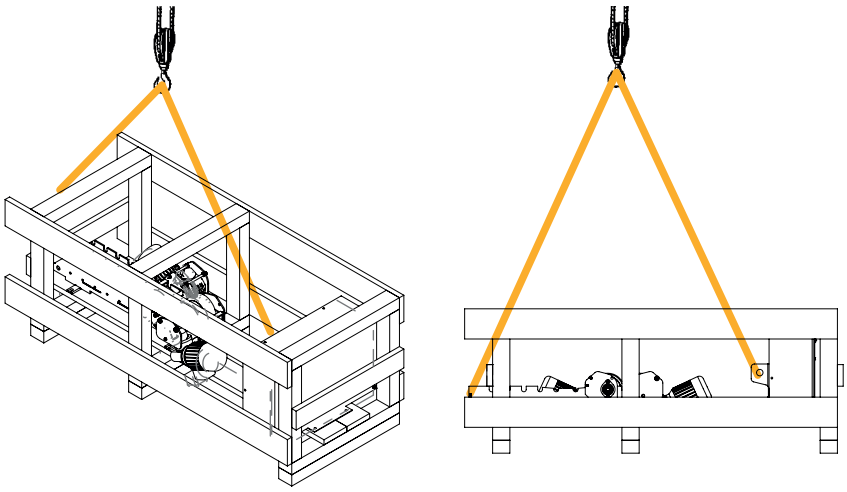

ST2W = 85 daN
ST2M = 69 daN

During slinging/transport operations, the use of Personal Protective Equipment (PPE) is <u>MANDATORY</u>.

1.2 ROTAMATIC ST6

ST6F = 126 daN

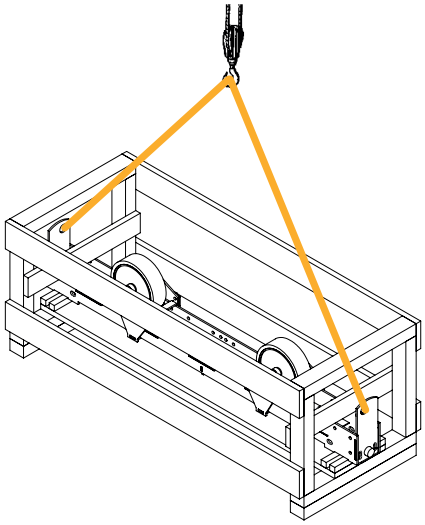

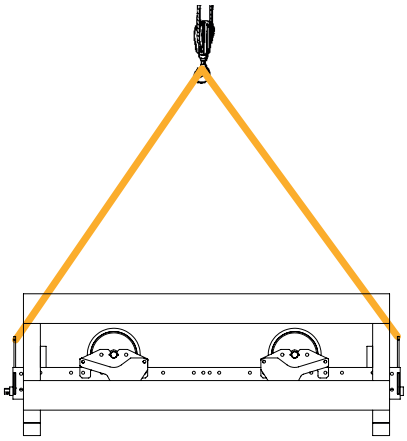

ST6F = 96 daN

ST6W = 243 daN
ST6M = 209 daN

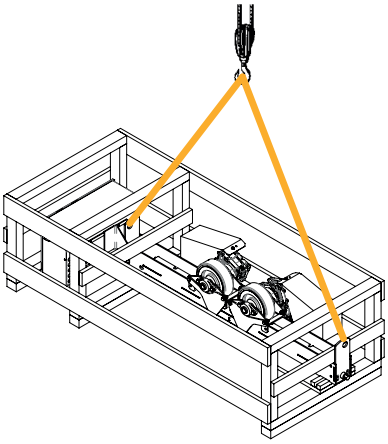

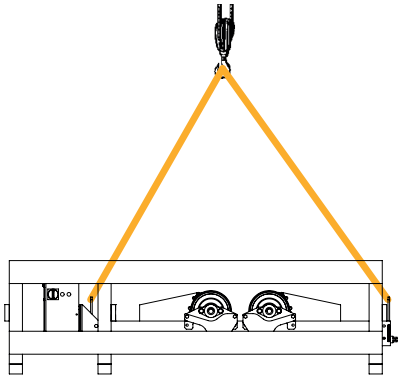

ST6W = 194 daN
ST6M = 160 daN

During slinging/transport operations, the use of Personal Protective Equipment (PPE) is <u>MANDATORY</u>.

1.3 ROTAMATIC ST15

ST15F = 244 daN

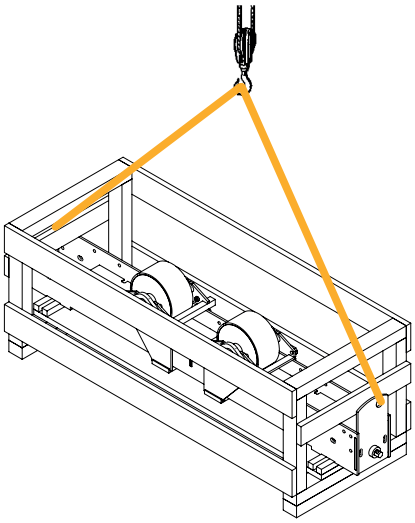

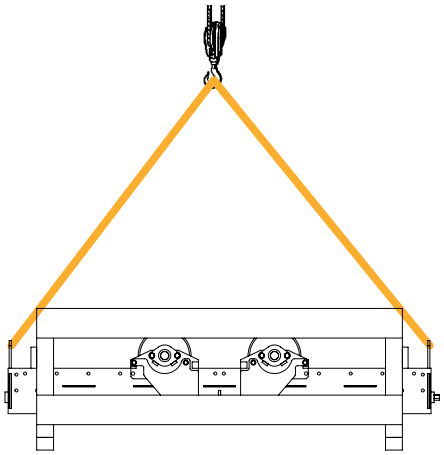

ST15F = 214 daN

ST15W = 364 daN
ST15M = 328 daN

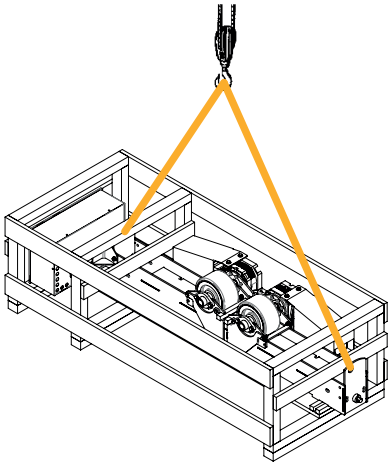

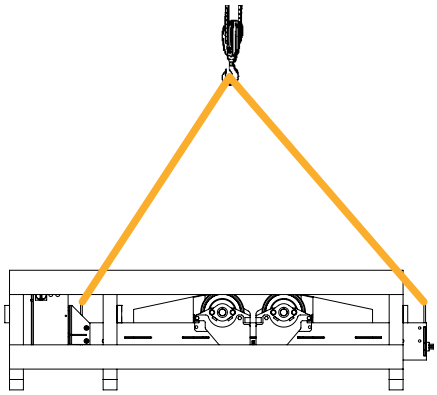

ST15W = 316 daN
ST15M = 280 daN

During slinging/transport operations, the use of Personal Protective Equipment (PPE) is <u>MANDATORY</u>.

1.4 ROTAMATIC ST30

ST30F = 370 daN

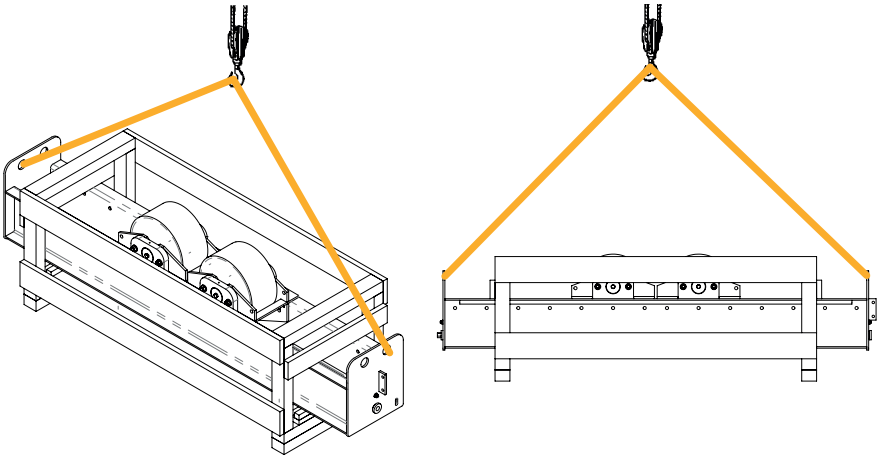

ST30F = 339 daN

ST30W = 543 daN

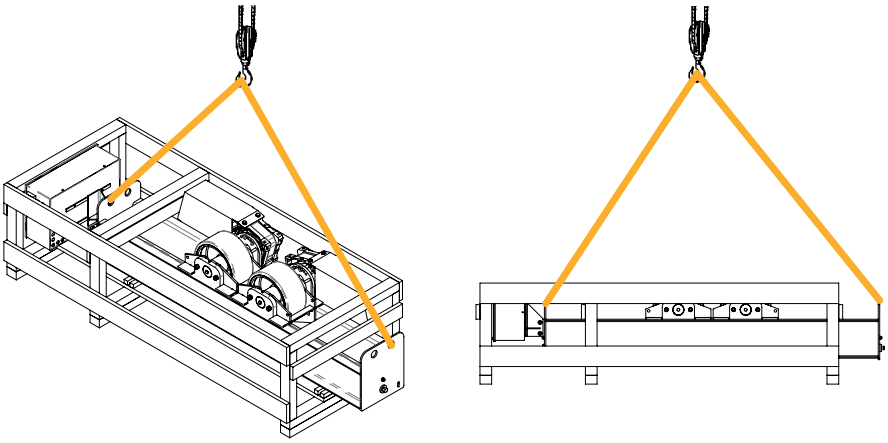

ST30W = 492 daN

During slinging/transport operations, the use of Personal Protective Equipment (PPE) is <u>MANDATORY</u>.

2 - Putting in place

The bases of rotators must be placed parallel in order to limit creep effects (lateral drift by the workpiece on the rollers).

The user must imperatively monitor creep by the rotating piece. If creep is significant, rotation must be stopped IMMEDIATELY and the adjustment must be inspected.

The centre line of the shell must be parallel to the line of the supporting rollers.

In order to line up the bases, you may use the pads fixed symmetrically under the rotator frame as your reference.

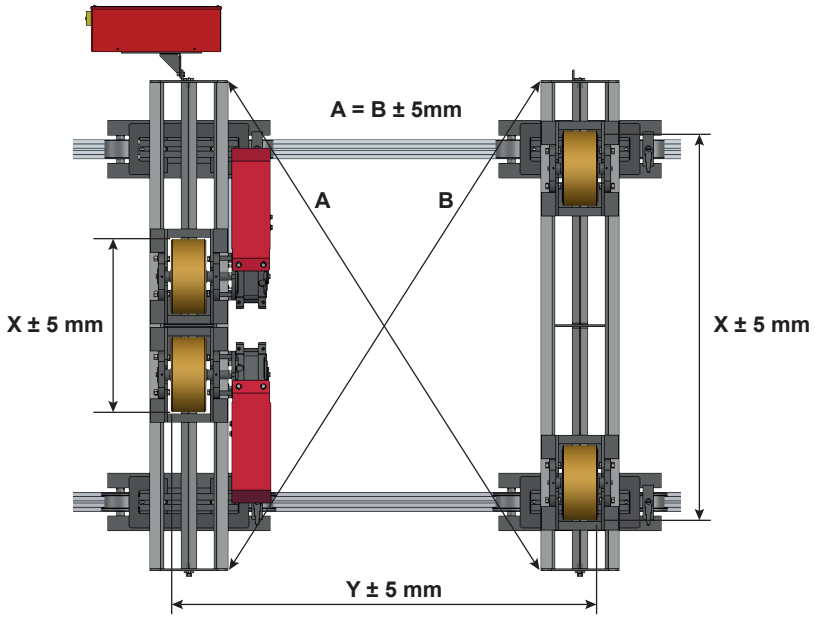

3 - Fastening the ROTAMATIC ST

This machine must imperatively be anchored to the floor with four anchoring points in a 20 Mpa (350 kg/m³) single continuous concrete screed with metal reinforcement, completed since at least 21 days.

Equipment recommended for fastening the ROTAMATIC ST

Make	Type of anchor	Part number	Drilling Ø (mm)	Permissible load (daN)
HILTI	Metal	FBR M 16 x 130	Ø 16	800
	Chemical	HAS M 16 x 190 + HBP 16	Ø 18	2120
FISCHER	Metal	FA 16 x 20 FB 16 x 25	Ø 16 Ø 16	1200 1200
	Chemical	RM 16 + RGM 16 x 190	Ø 18	3750
SPIT	Metal	050680 FIX 16/45	Ø 16	810 to 1270
	Chemical	M 16 - 5209 + SM 16 - 5224	Ø 18	2175

For installations with large-diameter shells, the base of the electrical cabinet may be placed vertically. In that case, it must imperatively be anchored to the floor.

Vertical fastening of the electrical cabinet (only with ROTAMATIC ST2)

- at each end, unscrew the tube connecting the electrical cabinet to the frame
- remove all the length of cable inside the tube.
- set the tube vertical and fasten it to the floor with its part near the frame
- lift the cabinet to the height of the end of the tube and assemble using the 4 screws removed earlier

4 - Electrical connections

The **ROTAMATIC ST** is connected electrically to the system made using the 5-metre cable located at the rear of the supply cabinet.
The cable, which has 4 conductors, must be connected to a standardised 3 x 400 V/50-60Hz system with equipotential bonding.

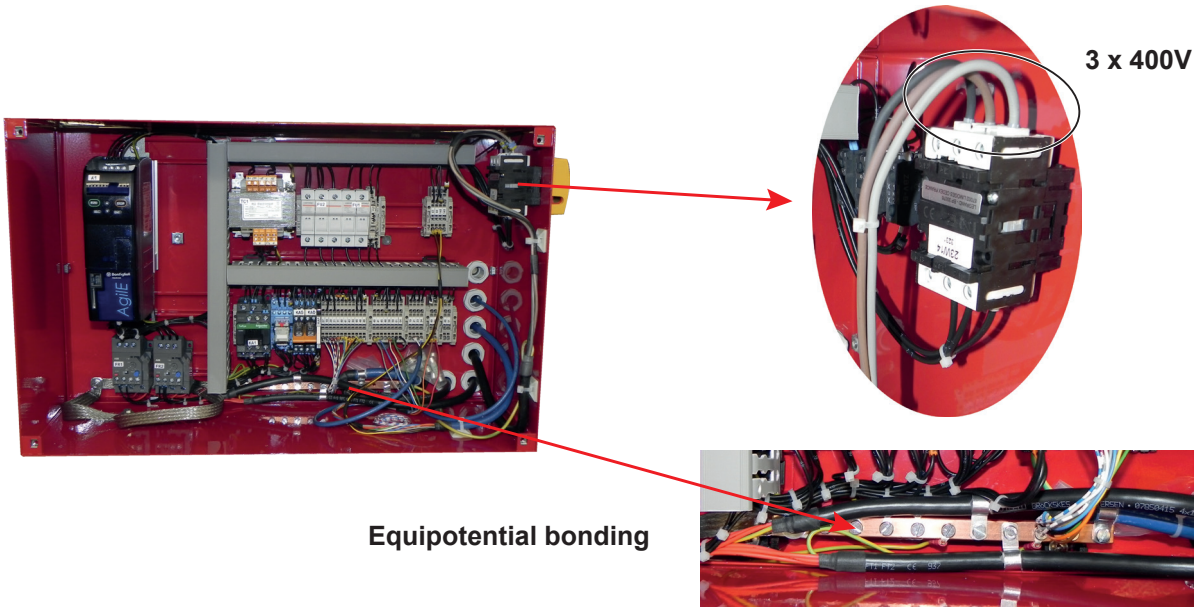

VERY IMPORTANT:
For compliance with European safety standards, the connection to the electricity supply is to be made via a wall-mounted cabinet with an individual protective sectioning switch with rating appropriate for the mains voltage and the consumption by the devices.
The protective disconnector must offer breaking capacity of 100KA.
We market cabinets that meet these criteria.

ARRANGEMENT OF CABLES AND FLEXIBLE HOSES
The customer must provide a means to support and protect cables and flexible hoses from mechanical, chemical or thermal damage, right from their point of origin.

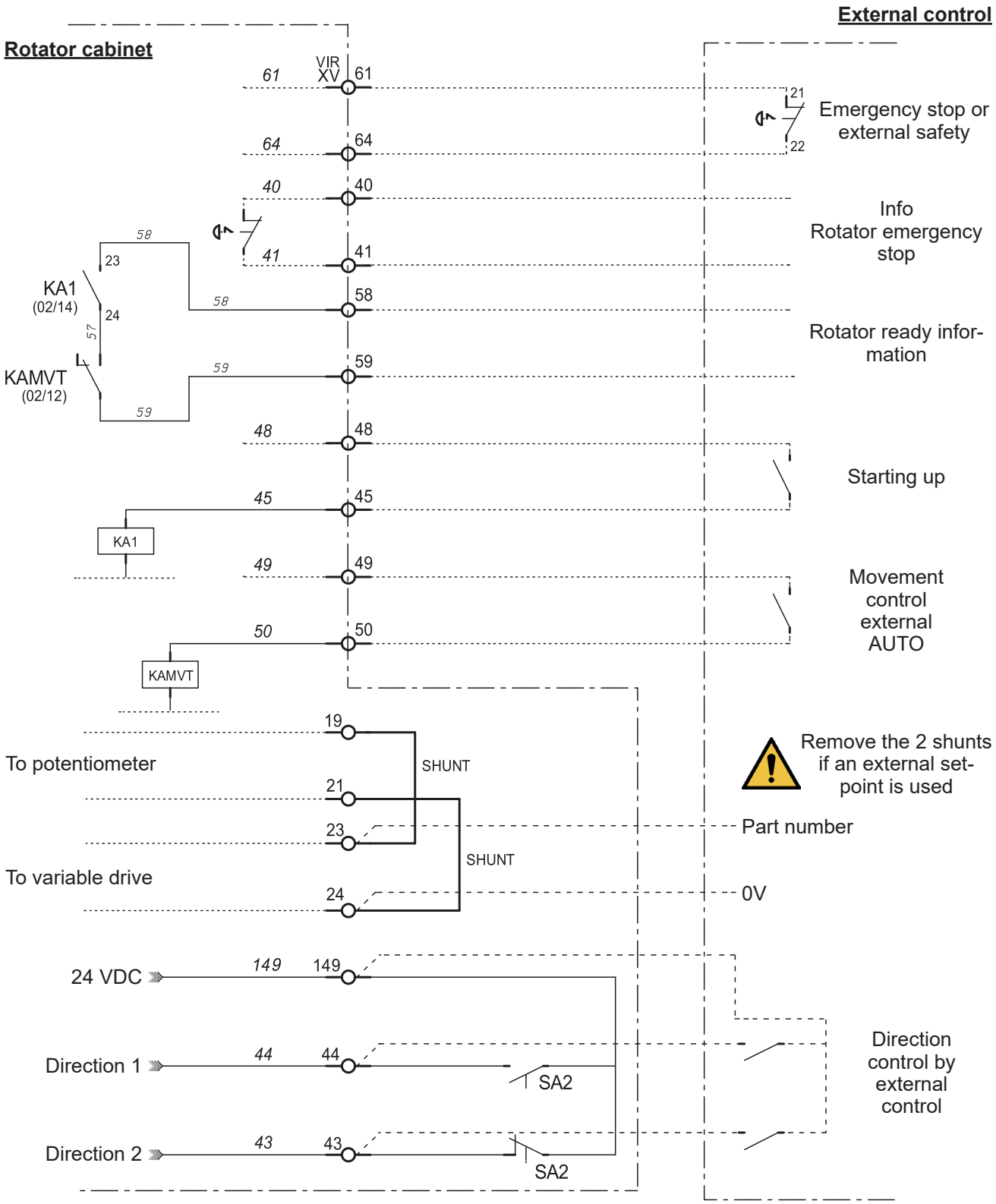
External control
Rotator cabinet
VIR XV
61
61
64
64
40
40
41
41
58
58
59
59
48
48
45
45
49
49
50
50
21
22
Emergency stop or external safety
Info Rotator emergency stop
Rotator ready information
Starting up
Movement control external AUTO
KA1 (02/14)
KAMVT (02/12)
23
24
57
KA1
KAMVT
19
21
23
24
SHUNT
SHUNT
To potentiometer
To variable drive
Remove the 2 shunts if an external set-point is used
Part number
0V
24 VDC
149
149
Direction 1
44
44
SA2
Direction 2
43
43
SA2
Direction control by external control

Before starting up, always make sure that the following setting up conditions and precautions have been applied.

It is important to know the position of the <u>centre of gravity</u> for:
- **defining the position of the bases**
- **checking the permissible rotation torque, called "unbalance".**

- The rotator bases must be placed under the workpieces, away from any openings in the shells and away from protruding parts that could hinder the rotation of the shell.
- Balance the load on the 2 bases.
- Set the centre distance of the rollers depending on the diameter of the shell to work on.

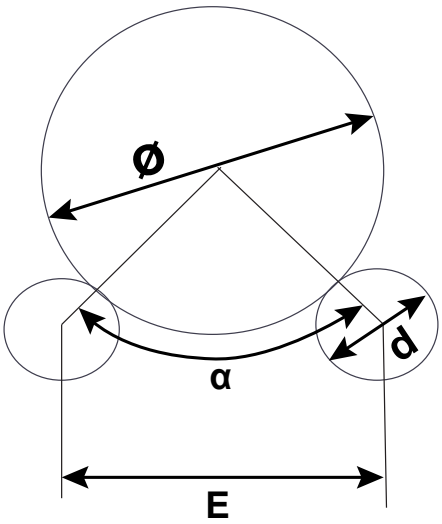

<u>WITHOUT unbalance:</u>

Recommended angle α: 60°
Corresponding adjustment: **E= (Ø + d) / 2**

	min. α (°)	max. α (°)
ROTAMATIC ST2	30	89
ROTAMATIC ST6	43	80
ROTAMATIC ST15	42	77
ROTAMATIC ST30	43	87

<u>WITH unbalance:</u>

If the shell is unbalanced, there is a risk of it tipping over away from the rotators.

The maximum permissible unbalance values along E are provided in the tables below, depending on the diameter and mass of the shell.

<u>Example of determination of permissible unbalance:</u>

Part data:
- Diameter "Ø": 2000 mm
- Mass "M" = 1000 Kg
- Eccentricity of the centre of gravity "A" = 20 mm

Determination of permissible unbalance:

Ø

Ø (mm)	300	500	1000	1500	2000	2500
α (°)	64	43	40	38	37	30
E (mm)	240	240	390	540	690	690
M= 2P (kg)	**Balourd (m.kg)**					
100	1	1	2	3	3	4
200	1	2	3	5	7	8
500	3	5	9	13	17	19
1000	7	9	17	25	34	38
1500	7	9	18	26	35	39
2000	6	12	24	35	46	52

M

Balourd = A x M

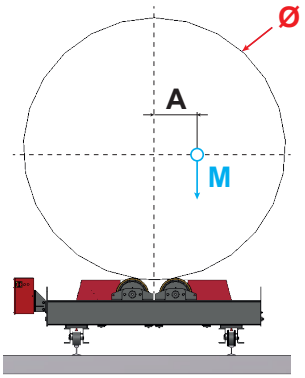

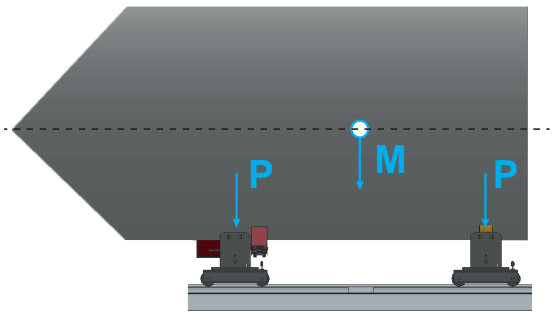

The maximum unbalance for **ROTAMATIC** is = 34 m.Kg.
That is total eccentricity of:

A = Unbalance/**M** = 34/1000 = 0.034 m = 34 mm

Verification: 20 mm < 34 mm so OK

ROTAMATIC ST2M

Ø (mm)	30	90	200	300	500	1000	1500	2000	2500
α (°)	60	87	87	64	58	48	38	37	30
E (mm)	90	165	240	240	315	465	540	690	690
M = 2P (Kg)	Max. unbalance (m.kg)								
100	0	0	1	1	1	2	3	3	4
200	0	1	1	1	2	4	5	7	8
500	0	1	3	3	5	9	13	17	19
1000	1	3	6	7	11	19	25	34	38
1500	1	2	5	7	11	19	26	35	39
2000	1	1	2	6	10	23	35	46	52

ROTAMATIC ST2W

Ø (mm)	30	90	200	300	500	1000	1500	2000	2500
α (°)	60	87	87	64	58	48	38	37	30
E (mm)	90	165	240	240	315	465	540	690	690
M = 2P (Kg)	Max. unbalance (m.kg)								
100	0	1	2	2	2	4	5	7	8
200	0	1	3	3	5	8	11	14	15
500	1	3	8	8	12	21	27	35	38
1000	2	7	15	16	24	42	53	70	76
1500	2	8	18	21	32	55	70	93	100
2000	3	5	10	26	43	73	94	123	134

ROTAMATIC ST6M

Ø (mm)	300	500	1000	1500	2000	2500	3000	3500
α (°)	71	56	57	58	59	56	50	43
E (mm)	320	350	600	850	1100	1300	1370	1370
M = 2P (Kg)	Max. unbalance (m.kg)							
500	4	6	13	20	26	32	36	39
1000	9	13	26	39	52	64	72	77
1500	13	19	39	59	78	96	107	116
2000	18	25	52	78	105	128	143	154
2500	22	32	65	98	131	160	179	193
4000	17	32	64	95	127	160	199	238
6000	7	16	32	47	63	81	105	132

ROTAMATIC ST6W

Ø (mm)	300	500	1000	1500	2000	2500	3000	3500
α (°)	71	56	57	58	59	56	50	43
E (mm)	320	350	600	850	1100	1300	1370	1370
M = 2P (Kg)	Max. unbalance (m.kg)							
500	10	13	26	40	54	65	71	74
1000	19	26	53	80	107	130	141	147
1500	29	39	79	120	161	195	212	221
2000	39	51	105	160	214	260	282	294
2500	49	64	132	200	268	325	353	368
4000	56	95	192	287	383	480	522	545
6000	17	55	106	156	206	269	352	416

ROTAMATIC ST15M

Ø (mm)	300	500	1000	1500	2000	2500	3000	3500	4000
α (°)	76	56	57	58	59	56	52	48	42
E (mm)	340	350	600	850	1100	1300	1420	1530	1540
M = 2P (Kg)	Max. unbalance (m.kg)								
1000	10	14	28	43	57	70	80	90	96
2000	21	28	57	86	115	140	160	179	192
3000	31	42	85	128	172	210	240	269	288
4000	42	56	113	171	229	280	320	359	385
5000	52	69	141	214	286	350	400	449	481
6000	63	83	170	257	344	420	480	538	577
10000	57	102	203	304	405	510	618	727	840
15000	4	57	113	169	224	285	354	423	499

ROTAMATIC ST15W

Ø (mm)	300	500	1000	1500	2000	2500	3000	3500	4000
α (°)	76	56	57	58	59	56	52	48	42
E (mm)	340	350	600	850	1100	1300	1420	1530	1540
M = 2P (Kg)	Max. unbalance (m.kg)								
1000	22	27	55	83	112	135	151	167	174
2000	44	54	110	167	224	271	303	334	348
3000	66	80	165	250	335	406	454	501	521
4000	88	107	220	333	447	542	606	668	695
5000	110	134	275	417	559	677	757	834	869
6000	132	161	330	500	671	812	909	1001	1043
10000	146	251	502	752	1002	1256	1490	1642	1711
15000	4	115	221	324	426	565	742	901	1047

ROTAMATIC ST30W

Ø (mm)	350	500	1000	1500	2000	2500	3000	3500	4000	4500
α (°)	87	69	58	58	59	59	57	55	49	44
E (mm)	480	480	650	900	1150	1400	1600	1780	1820	1820
M = 2P (Kg)	Max. unbalance (m.kg)									
1000	32	34	58	88	118	148	173	196	205	211
2000	65	69	116	176	236	296	346	391	410	422
3000	97	103	174	264	354	444	518	587	615	634
5000	162	172	290	440	590	740	864	978	1024	1056
10000	305	344	580	879	1179	1480	1728	1956	2049	2112
15000	295	428	862	1293	1723	2154	2587	2934	3073	3168
20000	243	363	741	1111	1480	1849	2225	2604	2999	3396
30000	164	264	553	827	1102	1376	1662	1953	2272	2595

6.1 ROTAMATIC ST2

Powered rollers:
The powered rollers of **ROTAMATIC ST 2M**, **2MT** and **2W** can be placed at different locations using the two screws on each side of the roller
To change the roller position, just remove those two screws, place the roller at the required location and then put back the two screws.

Idle rollers:
The idle rollers of **ROTAMATIC ST 2F**, **2M**, **2MT** and **2W** can be placed at different locations in notches.

The right and left rollers must be placed symmetrical to the centre line of the piece (shell).

6.2 ROTAMATIC ST6, ST15, ST30

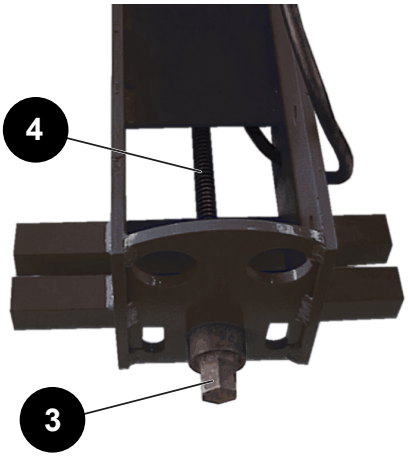

Centre distance:
The rollers are fastened on a compound screw (**ref 4**) that allows precise symmetrical positioning over the whole length of the frame.
They can be positioned by turning a hexagon screw (**ref 3**) using a 24 mm spanner.

The rollers must be put in place when there is no load (no piece on the rotator).
If pneumatic or electrical equipment is used for manoeuvring a compound screw, the operator must take care to not strike the stops too hard.

On a rotator line, all the centre distances must be adjusted identically.

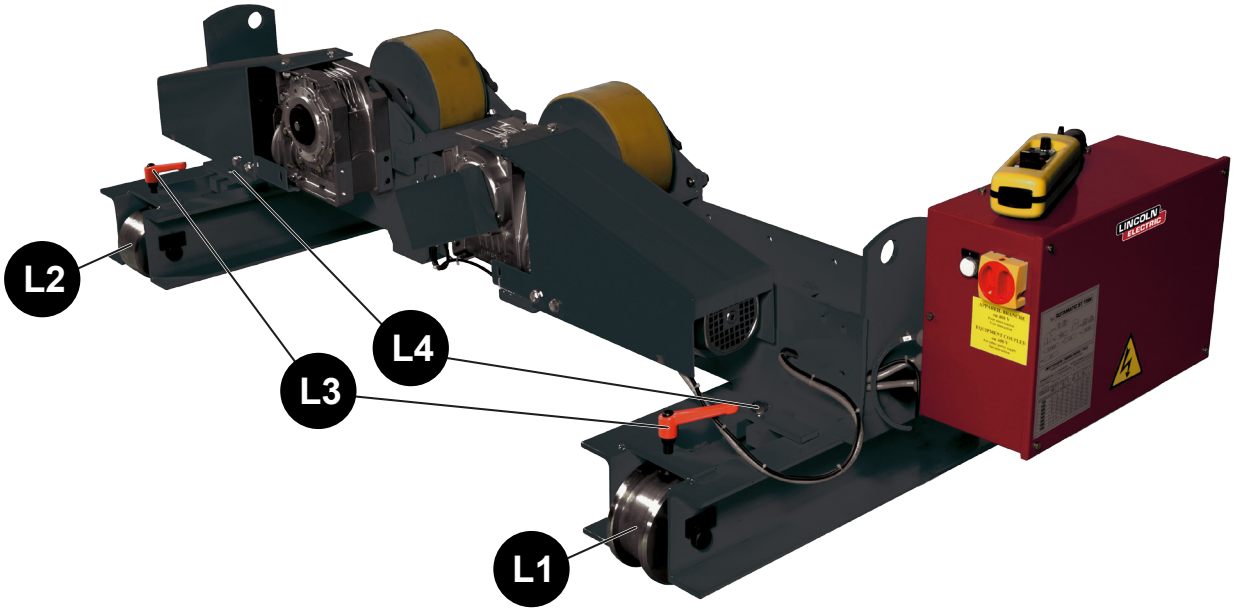

- Place truck **L1** on the rail.
- Place truck **L2** on the other rail.
- Immobilise the truck by tightening handles **L3**.
- Install chocks **L5** on the trucks.
- Place the **ROTAMATIC** on the truck and fasten it with 4 **L4** screws. (Check if the **ROTAMATIC** is perpendicular to the rails before tightening the screws).

NB: Chocks L5 are not used with ROTAMATIC ST2, ST6 and ST15.

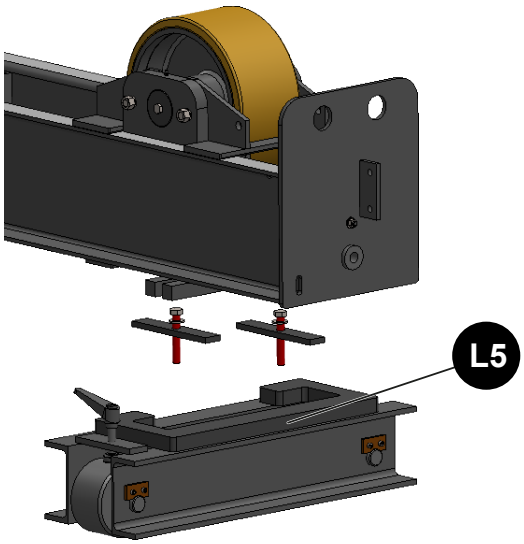

8 - Anti-creep device

In order to avoid creep, we can offer (as on option), stops depending on the type of **ROTAMATIC**.

As needed, the roller may be in steel or coated with polyurethane

Example of anti-creep stop on **ROTAMATIC ST15**.

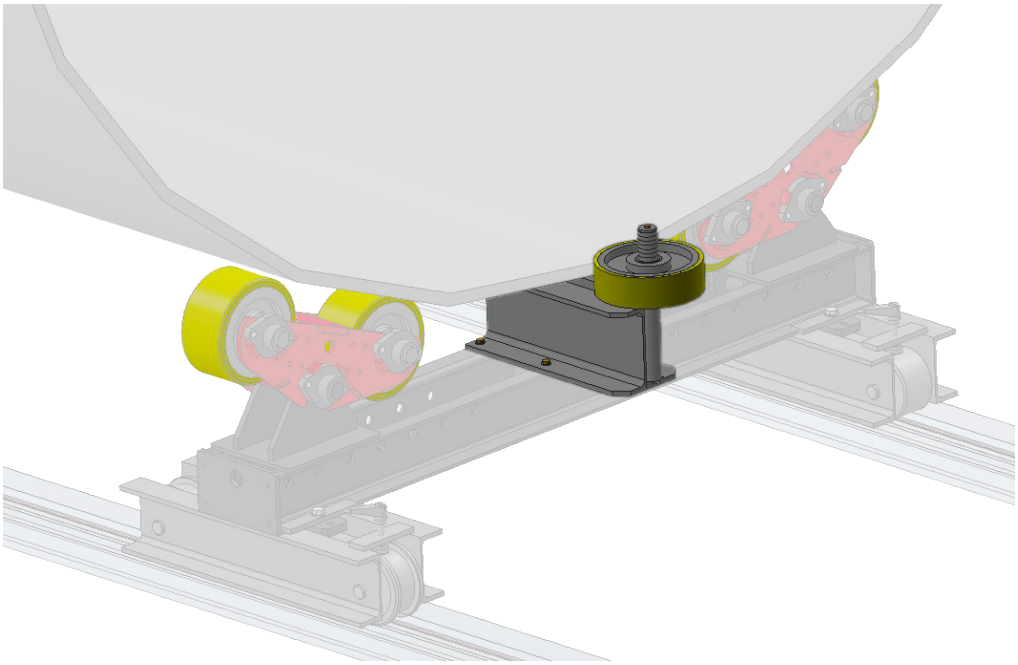

9 - Installing the pedal

Connect the On/Off pedal to terminals 49 and 50 of the **ROTAMATIC**.

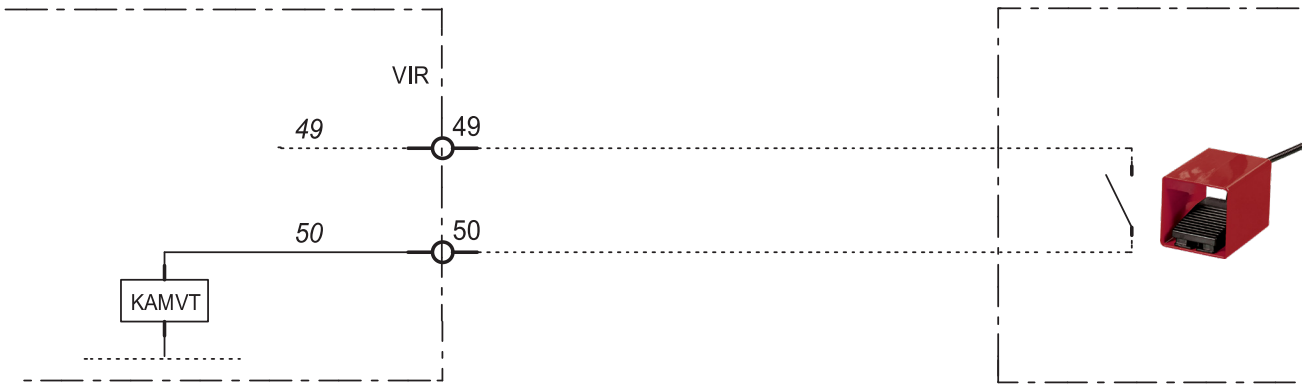

1 - Control button on cabinet

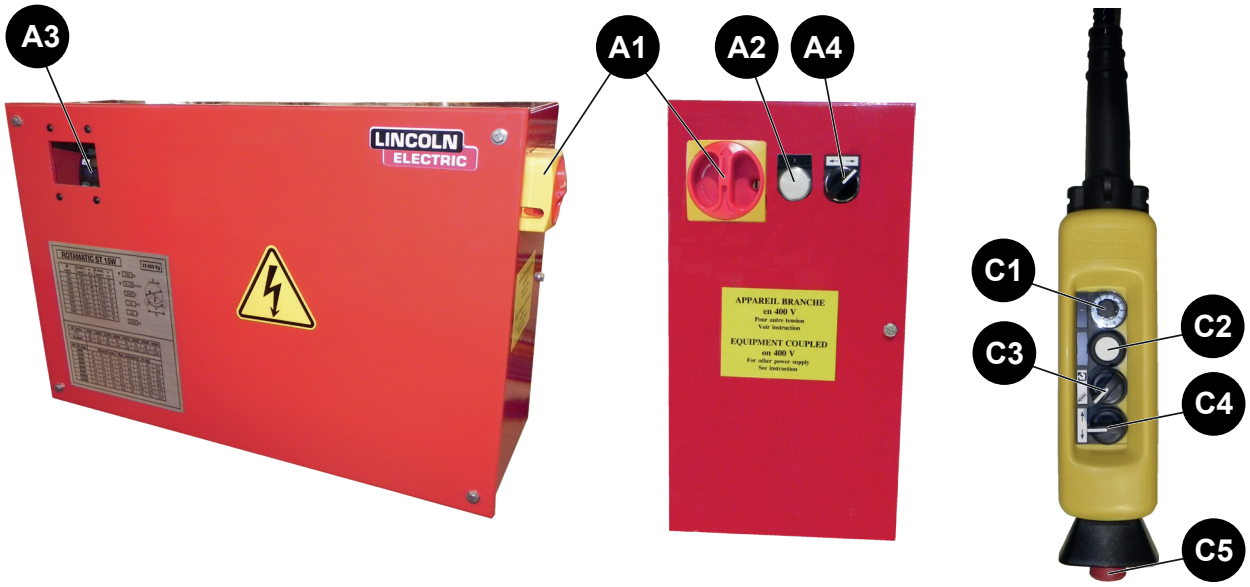

Reference	Description
A1	Main power on switch
A2	Power on indicator
A3	Variable drive speed display
A4	Rotation direction with automatic starting
C1	Rotation speed adjustment potentiometer
C2	Starting up pushbutton
C3	Local/external control location selection  Exterior Local
C4	Switch with three fixed positions for rotation direction. The central position is the idle position.
C5	Emergency stop

2 - Starting up the ROTAMATIC

Use in Local mode

1. Power up the **ROTAMATIC** by moving the disconnector **Ref A1** to position **I**. The indicator **Ref A2** must go on. The variable drive must display "**Ready**".
2. If the variable drive displays "**Alarm**", check that the emergency stop **Ref C5** is released.
3. Start up the **ROTAMATIC** by pressing **Ref C2**.
4. Select Local control. Selection is via **Ref C3**.
5. Select the rotation direction with **Ref C4**.

Caution! This will put the **ROTAMATIC** into rotation.

6. If needed, change the rotation speed with potentiometer **Ref C1**.

Use in External mode

1. Power up the **ROTAMATIC** by moving the disconnector **Ref A1** to position **I**. The indicator **Ref A2** must go on. The variable drive must display "**Ready**".
2. If the variable drive displays "**Alarm**", check that the emergency stop line is released.
3. Start up the **ROTAMATIC** by pressing **Ref C2** or with the remote control.
4. Select External control. Selection is via **Ref C3**.
5. Select the rotation direction with **Ref A4**.
6. Press
   - the pedal to start the movement (hold-to-run action) or
   - the external automatic movement control.
7. If needed, change the rotation speed with
   - the potentiometer **Ref C1** or
   - the external control.

3 - Shutting down the ROTAMATIC

1. Use the emergency stop **Ref C5**.
2. Power down the **ROTAMATIC** by moving the disconnector **Ref A1** to position **0**. The indicator **Ref A2** must go off.

4 - Optional synchronisation

Factory assembly only

This option allows two powered **ROTAMATIC** rotators to operate in synchronised mode. That allows the rotation of pieces supported by several powered and idle **ROTAMATIC** rotators through a single remote control or a single external control.

Synchronised mode (master/slave):
That mode controls two **ROTAMATIC** rotators via the remote control or from the external inputs of the main (master) **ROTAMATIC**. An indicator on each **ROTAMATIC** confirms that the synchronised mode has been selected. The remote control of the slave **ROTAMATIC** rotator is inactive, with the exception of the stop button.

Desynchronised mode (independent):
This mode makes it possible to control **ROTAMATIC** rotators via their remote controls or from the external inputs of the rotators, independently from each other. All the remote controls of the **ROTAMATIC** rotators are active.

Selecting the synchronised/desynchronised mode:
Switching from the synchronised mode to desynchronised mode is via the connecting cable between the powered **ROTAMATIC** rotators.

Synchronised mode: connecting cable connected and synchronisation indicator on cabinets on.
Desynchronised mode: connecting cable disconnected and synchronisation indicator on cabinets off.

In synchronised mode, the maximum driven load is 3/2 times the load of the powered rotator:

- For **ROTAMATIC ST2**: 3/2x2T = 3T
- For **ROTAMATIC ST6**: 3/2x6T = 9T
- For **ROTAMATIC ST15**: 3/2x15T = 22.5T
- For **ROTAMATIC ST30**: 3/2x30T = 45T

1 - Care

For a long and trouble-free life, the machine requires a minimum level of care and maintenance.

The frequency of such maintenance is indicated for production in one work shift per day, or maximum 2 hours of daily running for each movement axis. For higher production rates, increase the maintenance frequencies accordingly.

Your maintenance department could photocopy these pages to track maintenance frequencies and times and the operations completed (tick the appropriate box).

Before working on the machine, it is ***MANDATORY*** to lock out all the supplies of utilities to the machine (electricity, air, gas etc.).
Locking an emergency stop button is not sufficient.

Lubrication:
The reduction drives of **ROTAMATIC ST** have permanent lubrication and have no oil filling, topping up or draining plugs.
As a result, they need no maintenance.
These reduction drives can operate at ambient temperatures from 0 °C to +50 °C.

Inspection and safety:
All the instructions in this manual must be followed closely, particularly those relating to the limits of use.
Further, the main parts of the equipment, particularly the screws and nuts of the roller spacing system, the wearing of wheel and screw reduction gear, power cables of motors and remote control, motor ventilation etc., must be inspected after every three months.

Tyre maintenance and protection:
For a long life, the instructions below must be followed:

- Do not overload (no impact when the shell is squeezed)
- Do not place the rollers under a heavy load for an extended time, as that could permanently deform their solid tyres
- Do not put hydrocarbons on the rollers. If that were to happen, clean them very promptly.

In the event of pre-heating, the temperature of the shell area in contact with the tyres may not exceed 60 to 70 °C and the piece must be in continuous motion.

1.1 Maintenance schedule

This schedule must <u>absolutely</u> be followed.
We recommend putting in place a traced system for tracking all your maintenance operations.

Sub -assembly	Component	Type of inspection	Action	Frequency			Time (in hours)	Step
				1 month	6 months	1 year	8	
Rotation	Reduction drive	Visual	Lubrication	X				A
Rotation	Bearing*		Lubrication		X			B
ROTAMATIC			Blowing				X	C

* Only with **ROTAMATIC ST6**, **ST15**, **ST30**

Step	Operation	OK	NOK
A	*<u>Reduction drive</u>*	✔	✘
	After taking off the guard cover, check: · visually for leaks, · visually check the overall condition of the reduction drive. 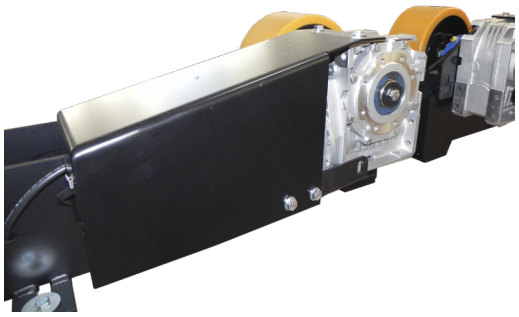		

Step	Operation	OK	NOK
B	*<u>Bearing housing</u>*	✔	✘
	Lubricate the bearings (Unil Opal: GREASE EPR2) 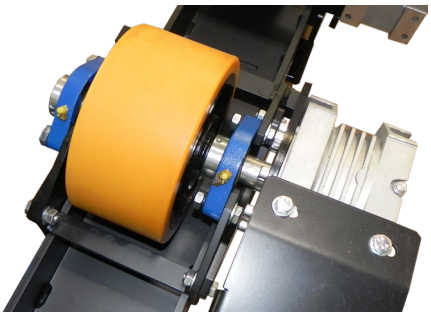		

Step	Operation	OK	NOK
C	**ROTAMATIC**	✔	✘
	Completely clean the **ROTAMATIC** using a blower.		

Possible symptom	Probable causes	Possible remedies
The rotator indicator goes off after the power is switched on with the switch QS1.	The LED lamp has blown	Replace the indicator body
	Fuses FU1 or FU3 have blown	Replace the blown fuses on the basis of the fuse rating table.
The rotator will not rotate after it is started up.	No rotation direction has been selected.	Select a rotation direction using the switch ↑ ↓
		With automatic control, the connection is not made between terminals 149 and 44 (right-hand rotation) or 149 and 43 (left-hand rotation) to control the operating direction. Make the connection with a shunt or external contact; see electrical connections.
		Check that the control location selector is on the required setting (local or external)
		When using an external ± 10V setpoint, check the presence of voltage between terminals 23 and 24 (0V → no rotation).
	The motor is not powered	Check and replace the fuses FU2 if needed.
		Check that the thermal relays FR1 or FR2 have not tripped. Then check that the thermal relay is correctly adjusted according to the table below: Double powered rotator: type: 2T / 6T / 15T / 30T value (A) 0.7 / 1 / 1.2 / 1.2
The rotator runs for a short time and then stops.	Over-intensity leading to: - a thermal relay fault or over-intensity leading to: - a variable drive fault, F0102 or F0103	Check the condition and adjustment of the thermal relays (double power version) according to the table above.
		Check that you have followed the table with the admissible load and unbalance values for your rotator.
		Check that the load has not increased suddenly.
		Check that the terminals U, V and W of the variable drive are not shorted.
		Check that the motor cable is not shorted and that the motor is correctly coupled.

2.1 Definitions of errors displayed on the variable drive

Number	Description
F0102,F0103	Variable drive overload. Check the load behaviour. Check the motor parameter adjustments.
F0200…F0300	Temperature too high. Check cooling, flap, sensor and ambient temperature. Temperature low. Check the ambient temperature and the heating of the electrical cabinet.
F0400, F0403	Motor temperature too high or sensor faulty. Check the connection to X12.4. Phase fault. Check the motor and the wiring
F0500…F0507	Overload, short circuit or dispersion in the ground, motor current or phase fault. Check the load behaviour and the gradients (P420...P423). Check the motor and the wiring.
F0700…F0706	DC bus too high or too low. Check the deceleration gradients (P421, P423) and the connected braking resistor. Check the network voltage. Check the network voltage, the fuses and the network circuit.
F0801,F0804	Electrical voltage (24V) too high or too low. Check the wiring of the control terminals
F1100…F1110	Maximum frequency reached. Check the control signals and adjustments. Inspect the deceleration gradients (P421, P423) and the connected braking resistor
F1310	Minimum output current. Check the motor and the wiring.
F1401	Signal of the reference value on the input X12.3 faulty, check the signal.
F1407	Over-intensity at input X12.3, check the signal.
F1408	Over-intensity at input X12.4, check the signal.
A0001…A0004	Variable drive overload. Check the load behaviour. Check the motor and application parameters.
A0008,A0010	Temperature too high. Check cooling, flap and ambient temperature.
A0080	Once the maximum motor temperature is reached, check the motor and sensor.
A0100	Network phase failure, check the main fuses and the power cable
A0400	Once the frequency limit is reached; output frequency limited.
A0800	Input signal at X12.3 too low. Increase the value
A1000	Input signal at X12.4 too low. Increase the value
A4000	The voltage of the DC bus has reached the minimum value

2.2 Rotator fuse ratings

	Standard rotators			**Optional regulation**
	FU1 5x20	**FU2 10x38**	**FU3 5x20**	**FU2 10x38**
ROTAMATIC ST2	1 A aM	6 A aM	6 A gF	10 A aM
ROTAMATIC ST6	1 A aM	6 A aM	6 A gF	10 A aM
ROTAMATIC ST15	1 A aM	6 A aM	6 A gF	10 A aM
ROTAMATIC ST30	1 A aM	6 A aM	6 A gF	10 A aM

Ordering procedure:

Almost all the parts of a machine or installation are referenced in the photographs and sketches.

The descriptive tables contain three types of item:

- items normally held in stock: ✔
- items not held in stock: ✘
- articles upon request: no reference

(For such parts, please complete the list of parts page and send us a copy. In the Order column, state the number of parts required and indicate the type and number of your equipment.)

For items referenced in the photographs or sketches but not included in the tables, please send us a copy of the relevant page and highlight the relevant reference.

Example:

✔	normally held in stock.
✘	not in stock
	upon request.

Ref.	Part no	Stock	Order	Description
A1	W000XXXXXX	✔		Machine interface board
A2	W000XXXXXX	✘		Flow meter
A3	P9357XXXX			Printed front plates

- While ordering parts, please indicate the quantity and note the number of your machine in the box above.

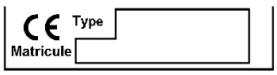

TYPE:
Number:

ROTAMATIC ST 2F

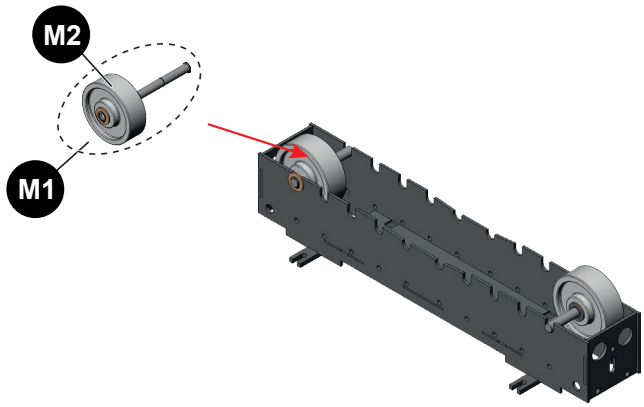

ROTAMATIC ST 2M

Version 2MT

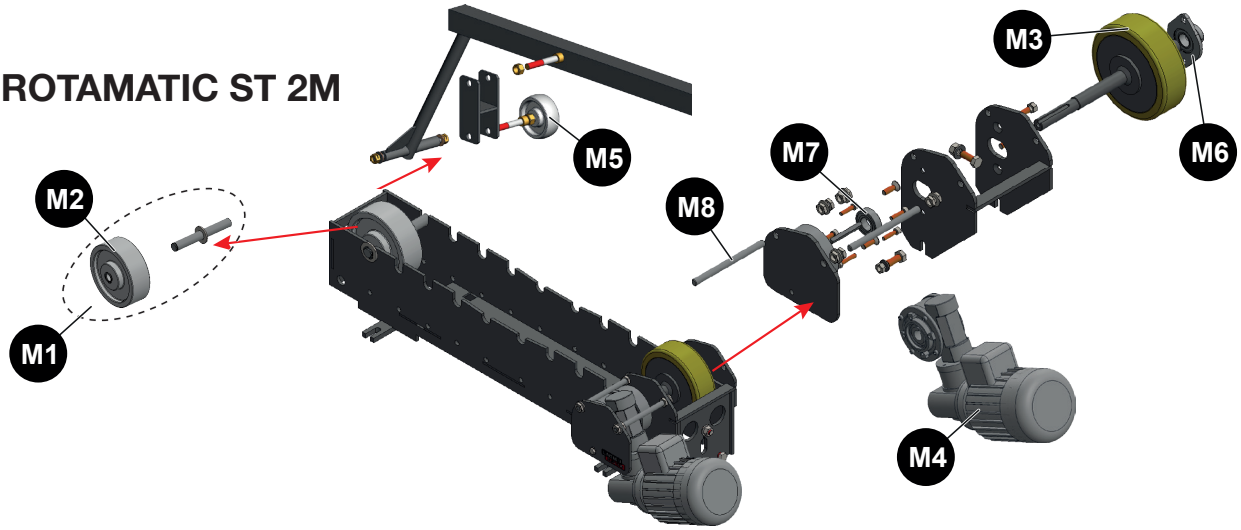

ROTAMATIC ST 2W

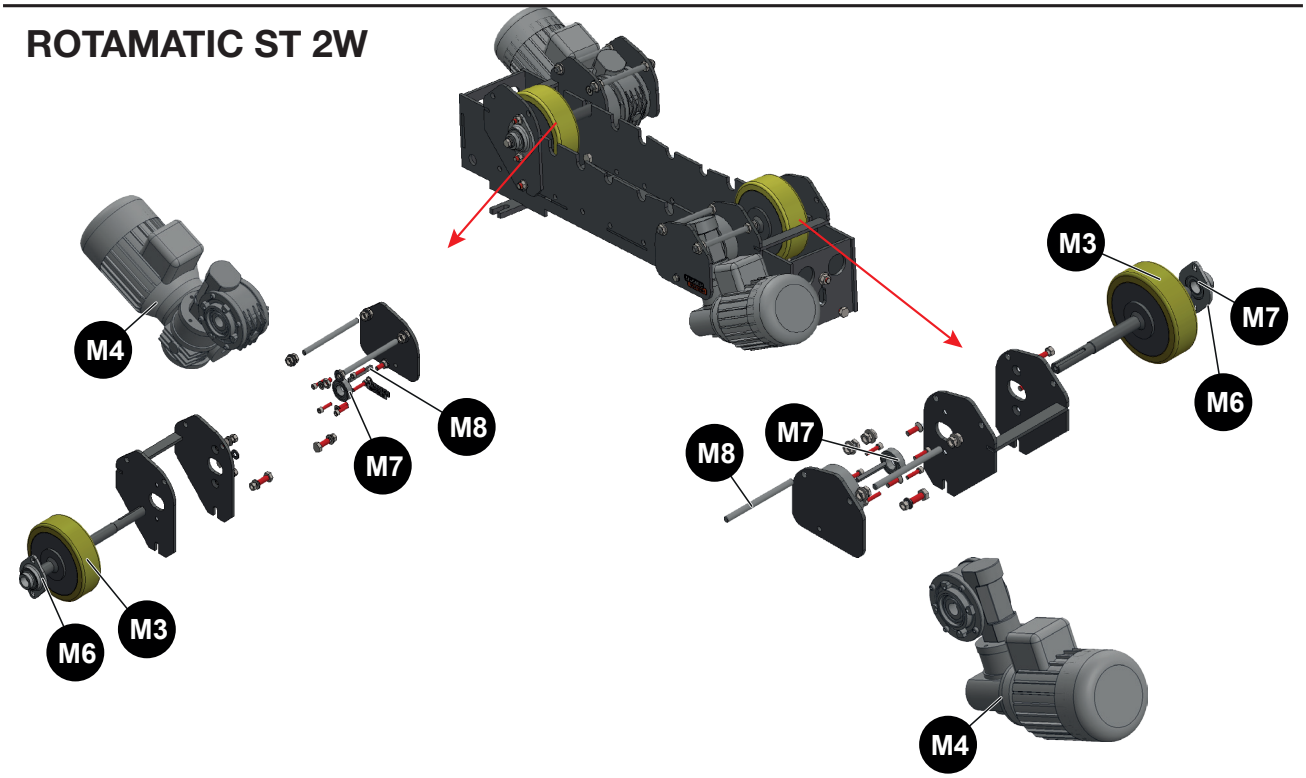

✔	normally held in stock.
✘	not in stock
	upon request.

Ref.	Part no	Stock	Order	Description
M1	W000137978	✔		Equipped idler roller
M2	P95035301			Roller, Ø150x50 *(Marzin: A 150/050/050/1/20-2)*
M3	W000137976	✔		Drive roller
M4	AS-PS-03001118	✔		Geared motor
M5	PC6200860			12x80x30 polyamide support roller - Only with **ROTAMATIC ST 2MT** *(Wicke France: KS 80/35/1G)*
M6	W000137980	✔		Drive roller bearing housing + ball bearing
	PC6201366			Bearing, OVAL 20 *(Schaeffler France: PCSLT20-XL)*
M7	PC6200429			Rigid ball bearing, 20x42x12 *(NTN SNR Bearing: 6004EE)*
M8	PC6201650			6x6x60 key, shape C *(Gardette: 36/C06.060)*

- While ordering parts, please indicate the quantity and note the number of your machine in the box above.

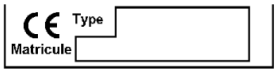

TYPE:
Number:

ROTAMATIC ST 6F

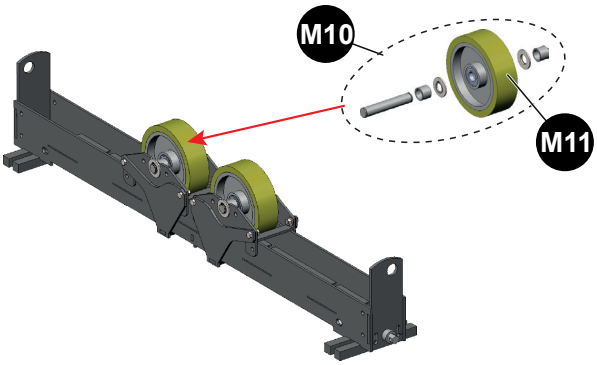

ROTAMATIC ST 6W

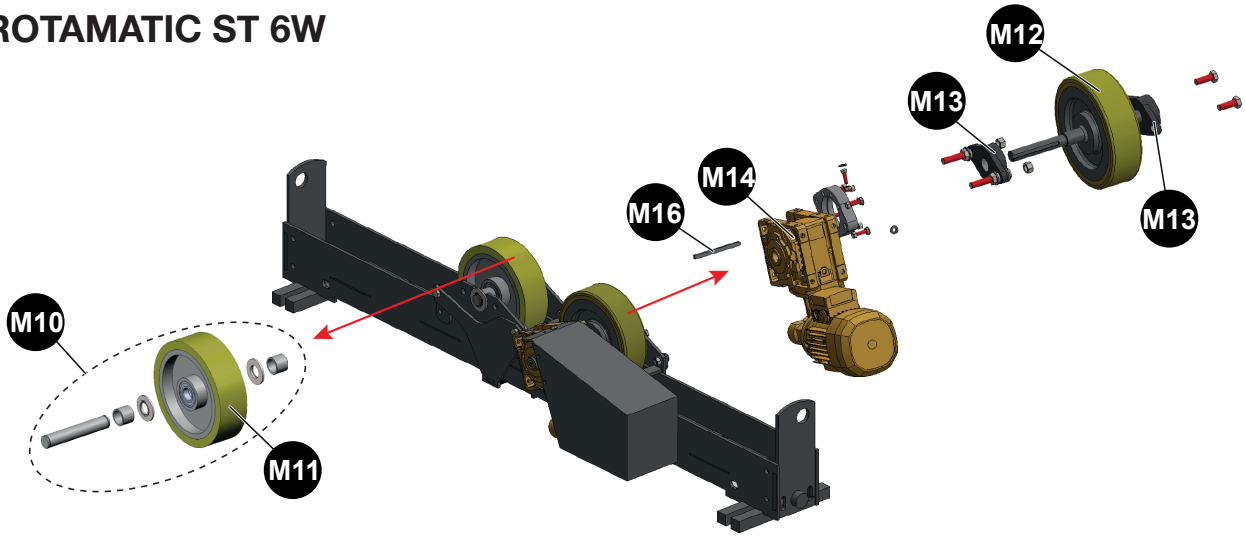

ROTAMATIC ST 6M

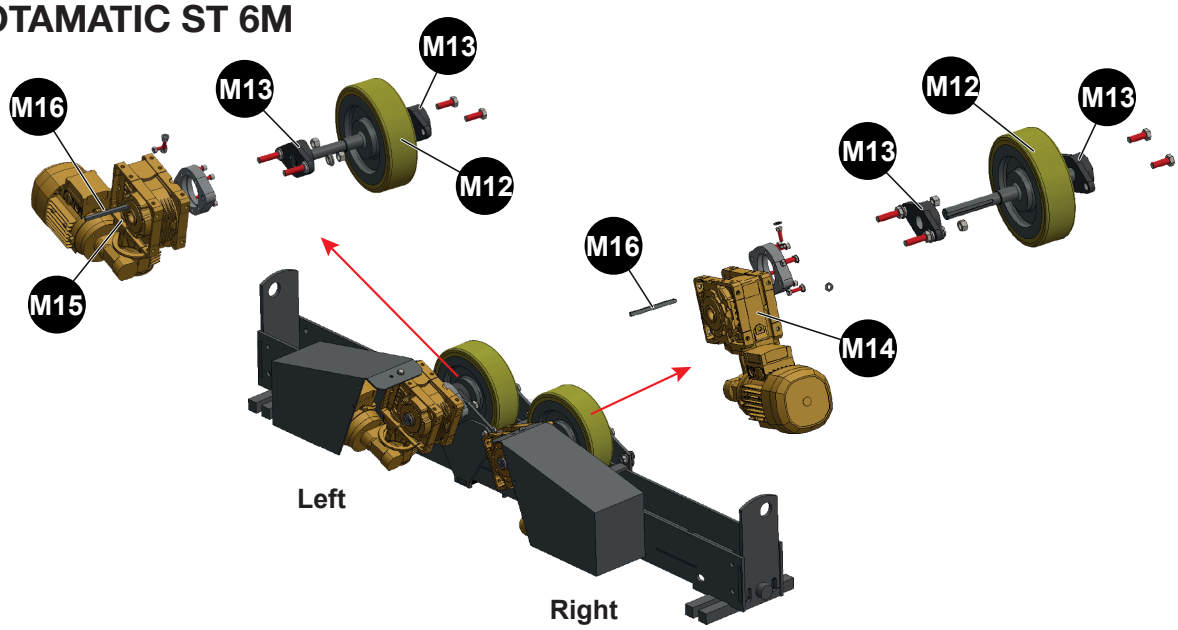

✔	normally held in stock.
✘	not in stock
	upon request.

Ref.	Part no	Stock	Order	Description
M10	W000137999	✔		Equipped idler roller
M11	P95035303			Idle PU roller, Ø250x75 *(Marzin: 5751.6220.00)*
M12	W000137997	✔		Powered PU roller, Ø250X75
M13	W000138001	✔		Oval bearing, 30 *(ECMU CSR: UCFL206 CSR)*
M14	AS-PS-03001339	✔		Right-hand reduction drive (near electrical cabinet)
M15	AS-PS-03001330	✔		Left-hand reduction drive
M16	P02995221			8x7x110 key, shape C *(Gardette: 36/C08.110)*

- While ordering parts, please indicate the quantity and note the number of your machine in the box above.

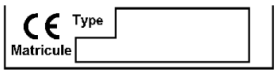

TYPE:	
Number:	

ROTAMATIC ST 15F

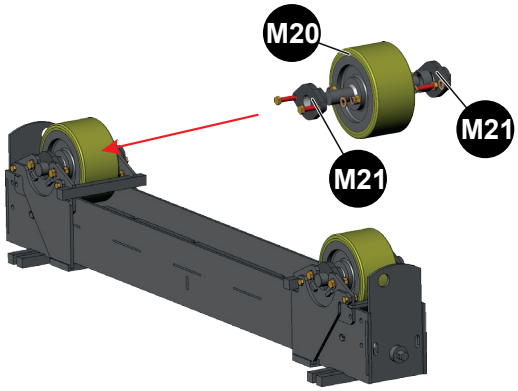

ROTAMATIC ST 15M

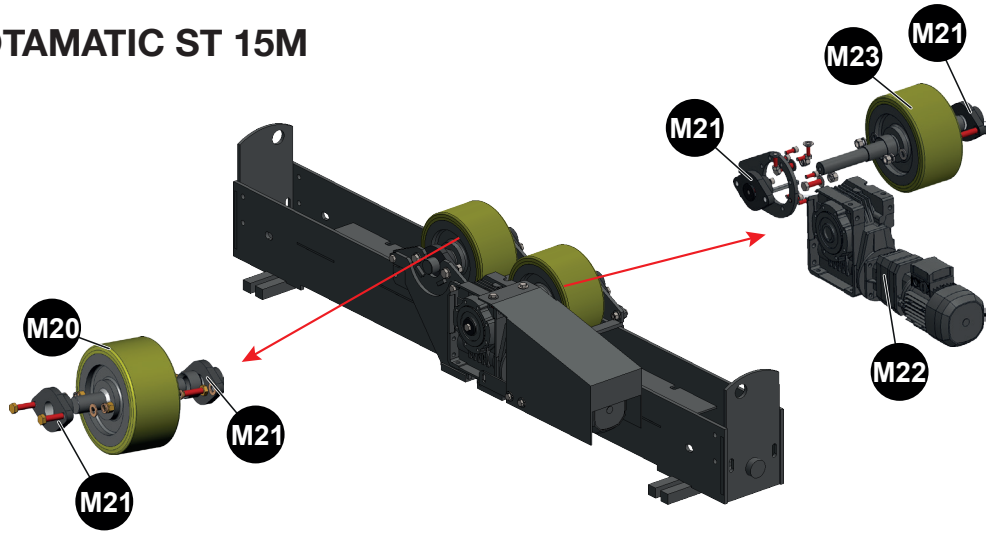

ROTAMATIC ST 15W

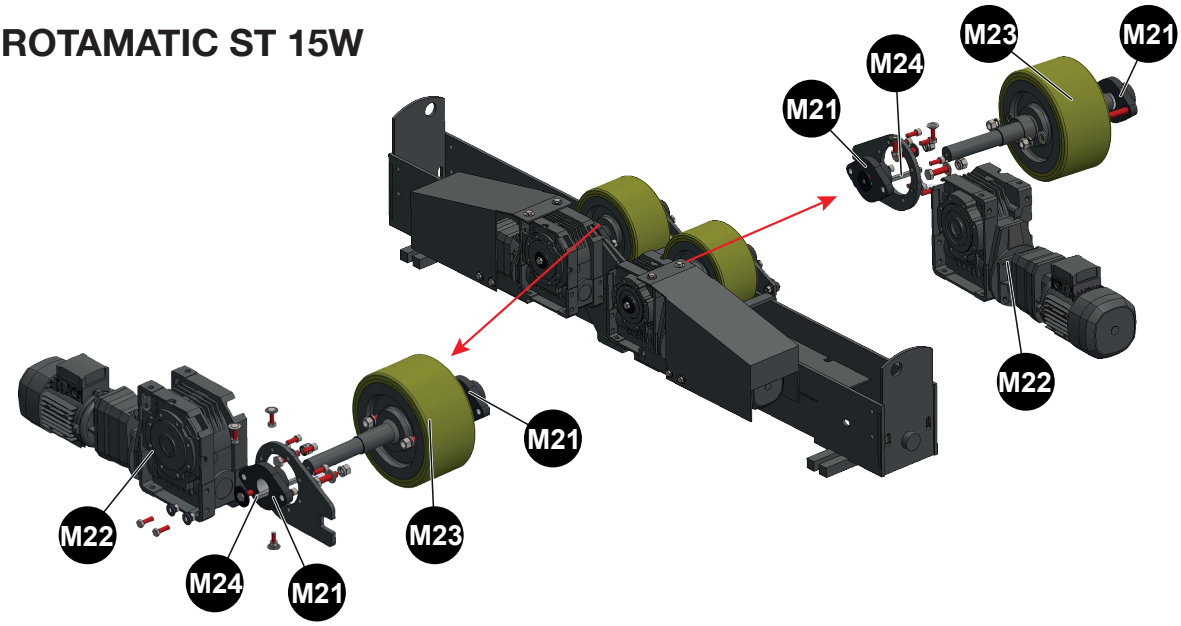

✔	normally held in stock.
✘	not in stock
	upon request.

Ref.	Part no	Stock	Order	Description
M20	W000138019	✔		Idle PU roller, Ø250x126
M21	W000138020	✔		Bearing housing *(NTN SNR Bearing: ESFD.208)*
M22	W000383728	✔		Geared motor
M23	W000275298	✔		Powered PU roller, Ø250x126
M24	PC6201689			10x8x119 key, shape A *(10x8x119 shape A)*

- While ordering parts, please indicate the quantity and note the number of your machine in the box above.

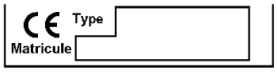

TYPE:	
Number:	

ROTAMATIC ST 30F

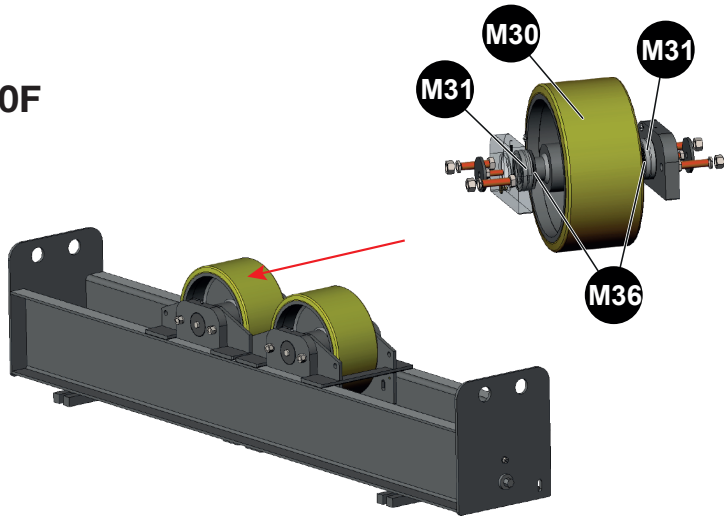

ROTAMATIC ST 30W

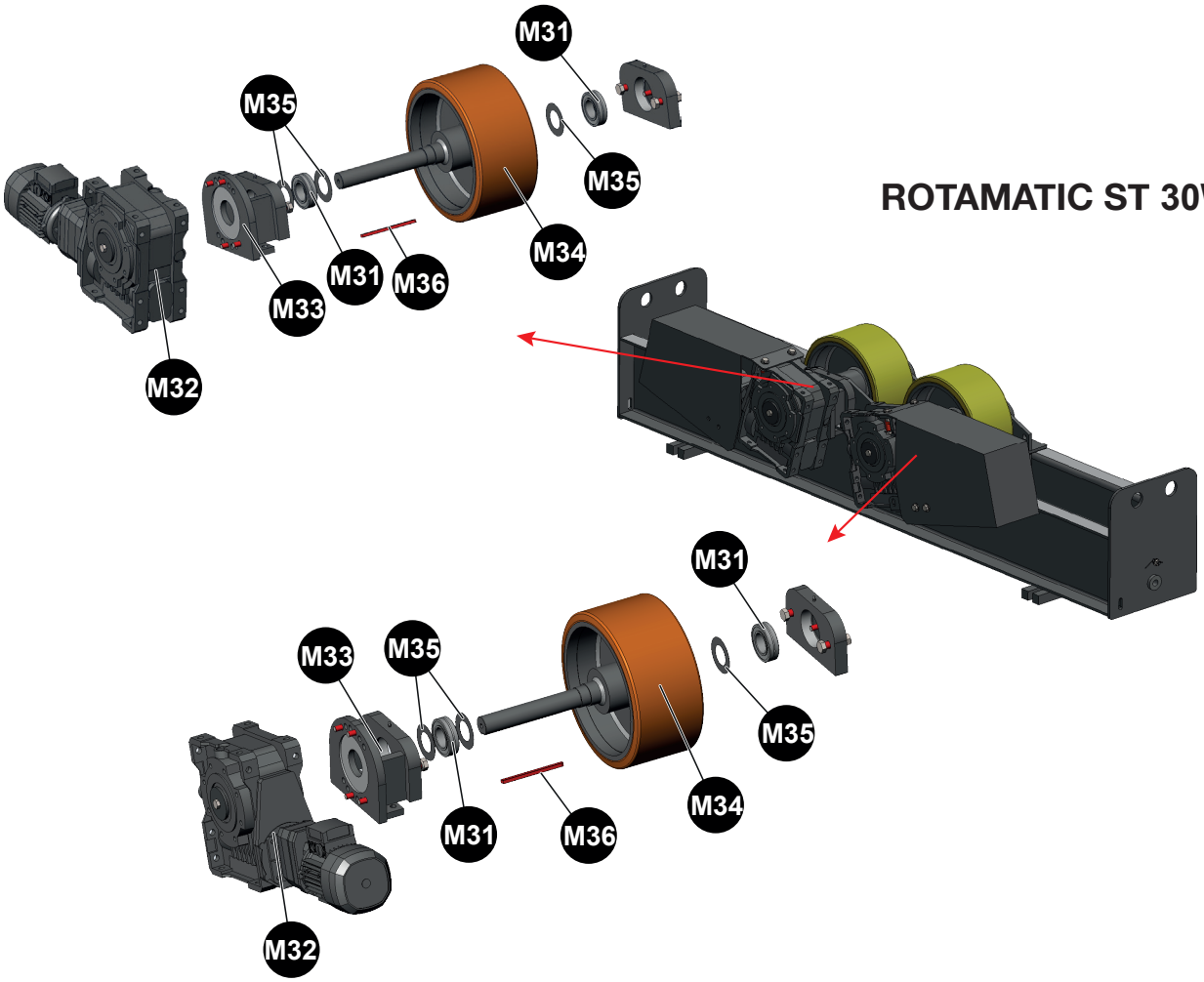

✔	normally held in stock.
✘	not in stock
	upon request.

Ref.	Part no	Stock	Order	Description
M30	W000138036	✔		Idle PU roller, Ø350x166
M31	PC6201322			Bearing, 45x85x23 *(NTN SNR Bearing: 22209 EAW33)*
M32	W000383729	✔		Drive
M33	P03001724			Reduction drive bearing housing
M34	W000138035	✔		Powered PU roller, Ø350x166
M35	P03001713			Protective washer, 45.2x82x0.5
M36	PC6201671			12x8x150 key, shape C *(Gardette: 36/C12.150)*

- While ordering parts, please indicate the quantity and note the number of your machine in the box above.

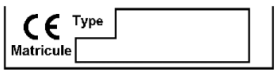

TYPE:
Number:

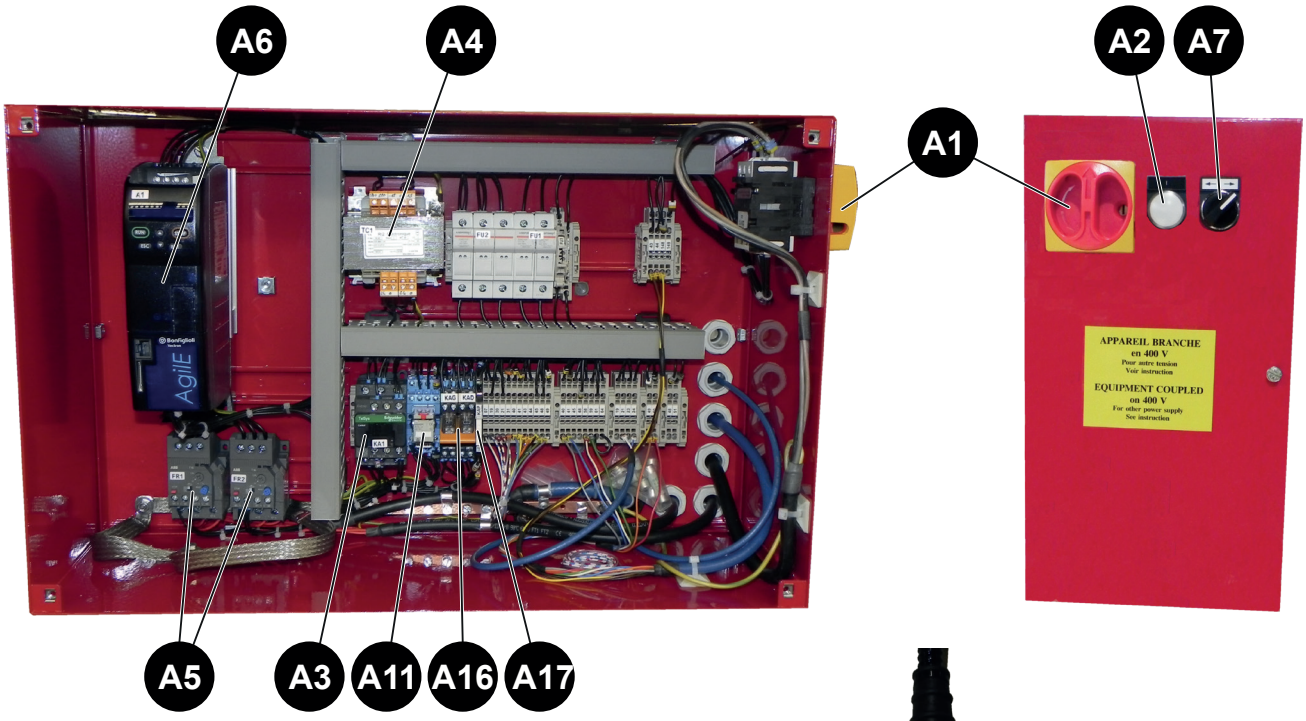
A6
A4
A2
A7
A1
A5
A3
A11
A16
A17
APPAREIL BRANCHE
en 400 V
EQUIPMENT COUPLED
on 400 V

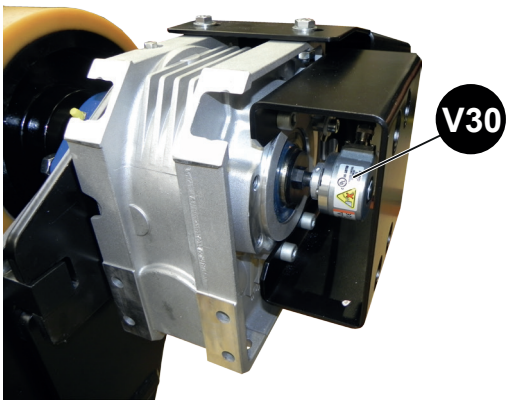
V30


C

✔	normally held in stock.
✘	not in stock
	upon request.

Ref.	Part no	Stock	Order	Description
A1	W000140748	✔		Main switch *(Rexel: LEG022102)*
A2	AS-PS-C5704157	✔		LED indicator *(Schneider Electric France: XB4BVB1)*
A3	PC5701064			Auxiliary contactor KA1 *(Schneider Electric France: CAD50B7)*
A4	PC5706078			63VA 220-380/2x24V transformer
A5	PC5705026			Thermal relay *(Elec System: 1SAZ711201R1023)*
A6	W000383719	✔		0.55KW Agile variable drive for **2TM - 2TM R - 2TW R**
	W000383720	✔		0.55KW Agile variable drive for **2TW**
	W000383721	✔		0.75KW Agile variable drive for **6TM - 6TM R - 6TW R**
	W000383722	✔		0.75KW Agile variable drive for **6TW**
	W000383723	✔		0.75KW Agile variable drive for **15TM - 15TM R - 15TW R**
	W000383724	✔		0.75KW Agile variable drive for **15TW**
	W000383726	✔		1.5KW Agile variable drive for **30TW R**
	W000383725	✔		1.5KW Agile variable drive for **30TW**
A7	W000366020	✘		Selector head with 2 fixed positions *(Schneider Electric France: ZB4BD2)*
	W000366042	✘		Body *(Schneider Electric France: ZB4BZ101)*
	W000366044	✘		Contact *(Schneider Electric France: ZBE102)*
A11	P91093173			Four-contact relay *(NEOREL: MY4IN24VAC)*
A16	PC5606743			Relay 2 RT *(NEOREL: G2R2SNS24VAC)*
A17	PC5701726			1RT relay (used with optional pedal) *(Weidmuller: 1122890000)*
C	AS-PS-95031065	✔		5 metre remote control with emergency stop
V30	W000383727	✘		5000 PPR encoder, 5 - 30V M12 *(Elec System: KUB8502048225000)*
	W000140321			AC fan, 120x120x38 24VAC (only with W ADR and W ADRC versions) *(Elec System: COSA12B05HTSW00)*

- While ordering parts, please indicate the quantity and note the number of your machine in the box above.

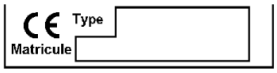

TYPE:	
Number:	

Lincoln Electric France S.A.S.
Avenue Franklin Roosevelt 76120 Le Grand Quevilly
76121 Le Grand Quevilly Cedex
www.lincolnelectriceurope.com