IM3014
06/2023
REV10

LINC 405 & 635

Spare Parts 1
Figure A, B: Machine Assembly 2
Miscellaneous Items (not showed in figure A, B) 4
Electrical Schematic 5
CODE: 50256, 50257, 50264 5
CODE: 50253, 50254 6

Lincoln Electric Bester Sp. z o.o.
ul. Jana III Sobieskiego 19A, 58-260 Bielawa, Poland
www.lincolnelectric.eu

Spare Parts

ASSEMBLY PAGE NAME			Machine Assembly	Machine Assembly	Miscellaneous items		
CODE NO.:	**K NO.:**	**FIGURE NO.:**	**A**	**B**	**-**		
50253	K14002-1	LINC 405-SA	1	1	1		
50254	K14002-2	LINC 405-S	2	2	2		
50253	K14002-5	LINC-405-SA	1	1	1		
50256	K14038-1	LINC 635-SA	5	5	5		
50257	K14038-2	LINC 635-S	6	6	6		
50257	K14038-4	LINC-635S	6	6	6		
50256	K14038-5	LINC-635-SA	5	5	5		
50264	K14038-6	LINC-635SAV	7	7	7		

*items highlighted in bold are recommended spare parts.

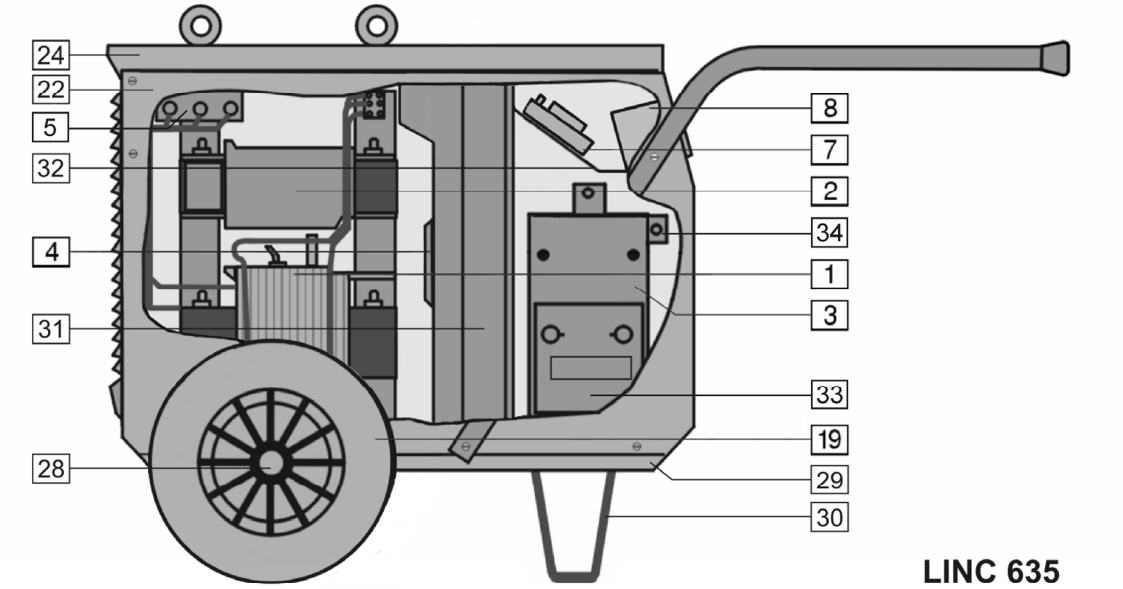

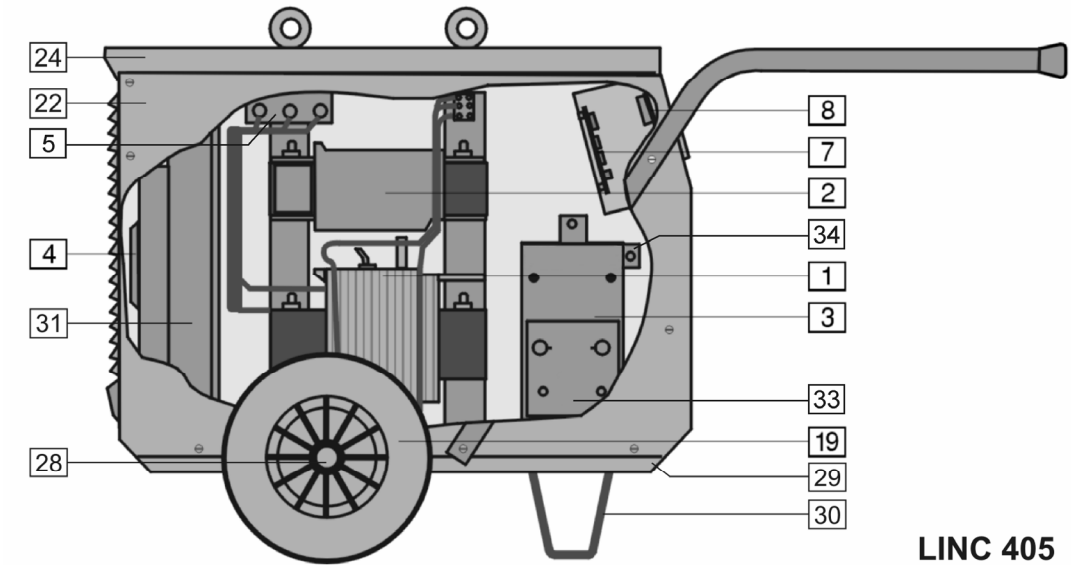

Figure A

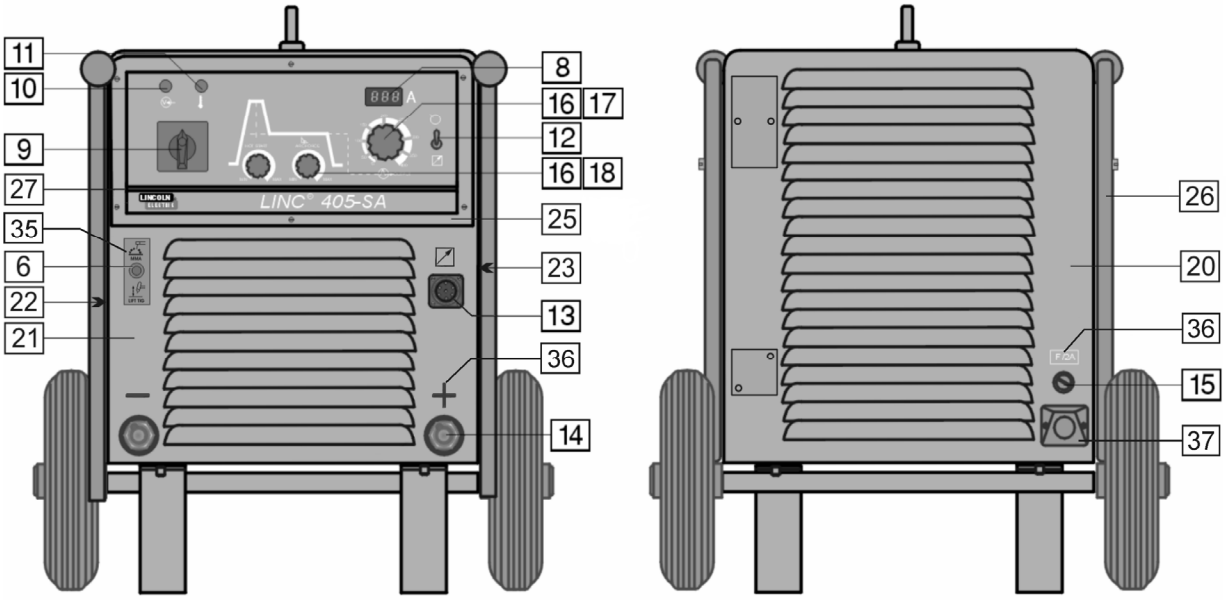

Figure B

Figure A, B: Machine Assembly

Item	Description	Part Number	QTY	1	2	3	4	5	6	7	8
1	TRANSFORMER T1	R-4034-017-2R	1	X	X	X	X	•	•	•	
	TRANSFORMER T1	R-4034-031-2R	1	•	•	•	•	X	X	X	
	TEMPERATURE SENSOR 140°C	1115-769-013R	1	X	X	X	X	X	X	X	
2	CHOKE L1	R-4034-016-2R	1	X	X	X	X	•	•	•	
	CHOKE L1	R-4034-042-2R	1	•	•	•	•	X	X	X	
	TEMPERATURE SENSOR 140°C	1115-769-013R	1	X	X	X	X	X	X	X	
	TEMPERATURE SENSOR 65°C	1115-769-053R	1	X	X	X	X	X	X	X	
3	**RECTIFIER SET V (PTT350D)**	**R-8040-233-1R**	**1**	**X**	**X**	**X**	**X**	•	•	•	
	RECTIFIER SET V (PTT550D)	R-0010-099-2R	1	•	•	•	•	X	X	X	
	TEMPERATURE SENSOR 100°C	1115-769-005R	1	X	X	X	X	X	X	X	
	TEMPERATURE SENSOR 50°C	1115-769-007R	1	X	X	X	X	X	X	X	
4	FAN M1	1111-311-084R	1	X	X	X	X	X	X	X	
5	TERMINAL BLOCK	1361-599-255R	1	X	X	X	X	X	X	X	
6	SWITCH K3	1115-280-005R	1	X	•	•	•	X	•	•	
7	**CONTROL CIRCUIT BOARD USM-13.3**	**0918-432-005R**	**1**	**X**	**X**	**X**	**X**	•	•	•	
	CONTROL CIRCUIT BOARD USM-13.3	**0918-432-039R**	**1**	•	•	•	•	**X**	**X**	**X**	
8	DIGITAL AMMETER WA/H-400	0918-432-063R	1	X	•	•	•	X	•	•	
9	MAIN SWITCH K1 (63A)	1115-260-113R	1	X	X	X	X	•	•	•	
	MAIN SWITCH K1 (100A)	1115-260-007R	1	•	•	•	•	X	X	X	
10	LAMP H1	0917-421-002R	1	X	X	X	X	X	X	X	
11	LAMP H2	0917-421-024R	1	X	X	X	X	X	X	X	
12	SWITCH K2	1115-280-005R	1	X	X	X	X	X	X	X	
13	SOCKET X3	1158-641-008R	1	X	X	X	X	X	X	X	
	CAP-CABLE CONNECTOR	1158-641-128R	1	X	X	X	X	X	X	X	
14	SOCKETS X1, X2	C-2986-001-3R	2	X	X	X	X	X	X	X	
15	FUSE F1	1158-660-028R	1	X	X	X	X	X	X	X	
16	POTENTIOMETER R1, R2, R3	1158-113-304R	3	X	•	•	•	X	•	•	
	POTENTIOMETER R1	1158-113-304R	1	•	X	X	X	•	X	X	
17	KNOB (Ø38)	9ET10491R	1	X	X	X	X	X	X	X	

18	KNOB (Ø25)	9ET13639-3R	2	X	•	•	•	X	•	•	
19	WHEEL (Ø250)	1029-660-250R	2	X	X	•	•	•	•	•	
	WHEEL (Ø300)	1029-660-010R	2	•	•	•	•	X	X	•	
20	REAR PANEL	C-3721-788-1/08R	1	X	X	X	X	•	•	•	
	REAR PANEL	R-3019-064-1/08R	1	•	•	•	•	X	X	X	
21	FRONT PANEL	R-3019-059-1/08R	1	X	X	X	X	•	•	•	
	FRONT PANEL	R-3019-065-1/08R	1	•	•	•	•	X	X	X	
22	LEFT SIDE PANEL	C-3721-790-1/02R	1	X	X	X	X	•	•	•	
	LEFT SIDE LABEL	2719-107-822R	1	X	X	X	X	•	•	•	
	LEFT SIDE PANEL	R-1019-061-1/02R	1	•	•	•	•	X	X	X	
	LEFT SIDE LABEL	2719-107-932R	1	•	•	•	•	X	X	X	
23	RIGHT SIDE PANEL	C-3721-790-2/02R	1	X	X	X	X	•	•	•	
	RIGHT SIDE LABEL	2719-107-818R	1	X	X	X	X	•	•	•	
	RIGHT SIDE PANEL	R-1019-061-1/02R	1	•	•	•	•	X	X	X	
	RIGHT SIDE LABEL	2719-107-931R	1	•	•	•	•	X	X	X	
24	TOP PANEL	C-3773-096-1/02R	1	X	X	X	X	•	•	•	
	TOP PANEL	R-1019-062-1/02R	1	•	•	•	•	X	X	X	
	LABEL (WARNING)	2719-107-698R	1	X	X	X	X	X	X	X	
	LABEL (SCHEMATIC)	C-2837-073-2R	1	X	X	X	X	•	•	•	
	LABEL (SCHEMATIC)	C-2837-073-3R	1	•	•	•	•	X	X	X	
25	CONTROL PANEL	C-3721-795-1/08R	1	X	X	X	X	•	•	•	
26	HANDLES	C-4941-778-1R	1	X	X	•	•	X	X	•	
27	LABEL	2719-107-821R	1	X	•	•	•	•	•	•	
	LABEL	2719-107-934R	1	•	•	•	•	X	•	•	
	LABEL	2719-107-820R	1	•	X	X	X	•	•	•	
	LABEL	2719-107-933R	1	•	•	•	•	•	X	X	
28	AXLE	D-2574-049-1R	1	X	X	•	•	•	•	•	
	AXLE	R-1019-078-1R	1	•	•	•	•	X	X	•	
29	BOTTOM PANEL	R-3019-061-1/08R	1	X	X	X	X	•	•	•	
	BOTTOM PANEL	R-3019-068-1/08R	1	•	•	•	•	X	X	X	
30	SUPPORT	C-2631-397-1/08R	2	X	X	•	•	•	•	•	
	SUPPORT	R-1019-063-1/08R	2	•	•	•	•	X	X	•	
31	WALL RING	R-3019-062-1/08R	1	X	X	X	X	•	•	•	
	WALL RING	R-3019-070-1/08R	1	•	•	•	•	X	X	X	
32	SHELF	R-1019-056-1/08R	1	•	•	•	•	X	X	X	
33	BRACKET	D-2632-603-1/08R	2	X	X	X	X	•	•	•	
	BRACKET	R-1019-055-2/08R	2	•	•	•	•	X	X	X	
34	SHUNT	D-5311-019-1R	1	X	X	X	X	•	•	•	
	SHUNT	0941-712-026R	1	•	•	•	•	X	X	X	
35	LABEL	2719-107-195R	1	X	•	•	•	X	•	•	
36	LABEL (COMPLETE)	2719-107-694R	1	X	X	X	X	X	X	X	
37	CABLE BOX	1361-599-665R	1	X	X	X	X	•	•	•	
	CABLE BOX	1361-599-250R	1	•	•	•	•	X	X	X	

Miscellaneous Items (not showed in figure A, B)

Item	Description	Part Number	QTY	1	2	3	4	5	6	7	8
1	CAPACITOR C4	1158-121-000R	1	X	X	X	X	X	X	X	
2	CAPACITORS C1, C2, C3	1158-125-373R	3	X	X	X	X	X	X	X	
3	MAINS CABLE WITHOUT PLUG 5m	R-5041-041-1R	1	X	X	X	•	•	•	•	
4	MAINS CABLE WITHOUT PLUG 15m	R-5041-041-2R	1	•	•	•	X	•	•	•	
5	MAINS CABLE WITHOUT PLUG 5m	R-5041-064-1R	1	•	•	•	•	X	X	X	
6	SKID	D-3721-409-1/08R	2	•	•	X	X	•	•	X	
7	WIRING HARNESS	R-7040-161-1R	1	X	X	X	X	•	•	•	
8	WIRING HARNESS	R-7040-199-1R	1	•	•	•	•	X	X	X	
9	PCB WIRING HARNESS	R-7040-162-1R	1	X	•	•	•	•	•	•	
10	PCB WIRING HARNESS	R-7040-162-2R	1	•	X	X	X	•	•	•	
11	PCB WIRING HARNESS	R-7040-200-1R	1	•	•	•	•	X	•	•	
12	PCB WIRING HARNESS	R-7040-200-2R	1	•	•	•	•	•	X	X	

Electrical Schematic

CODE: 50256, 50257, 50264

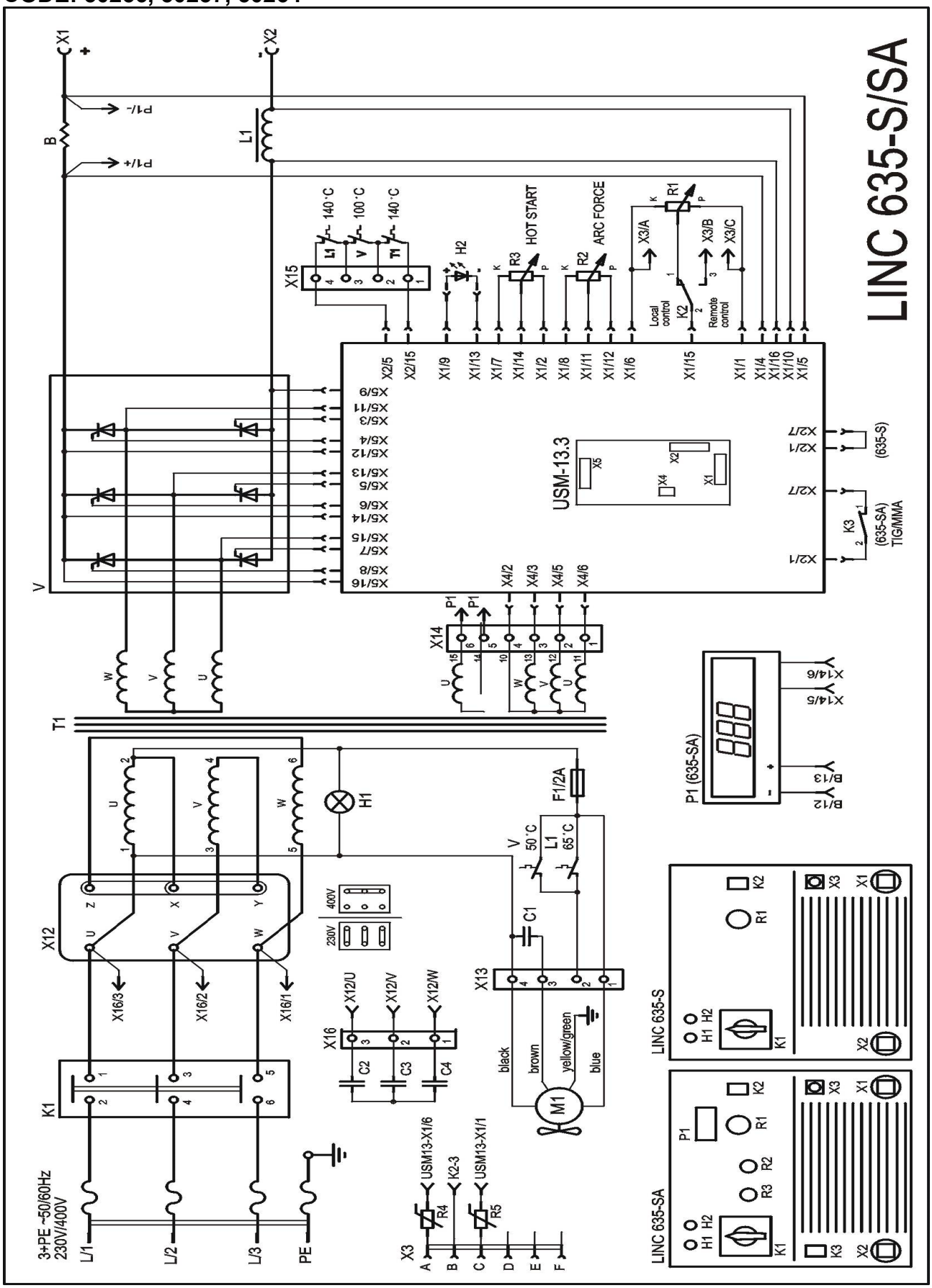
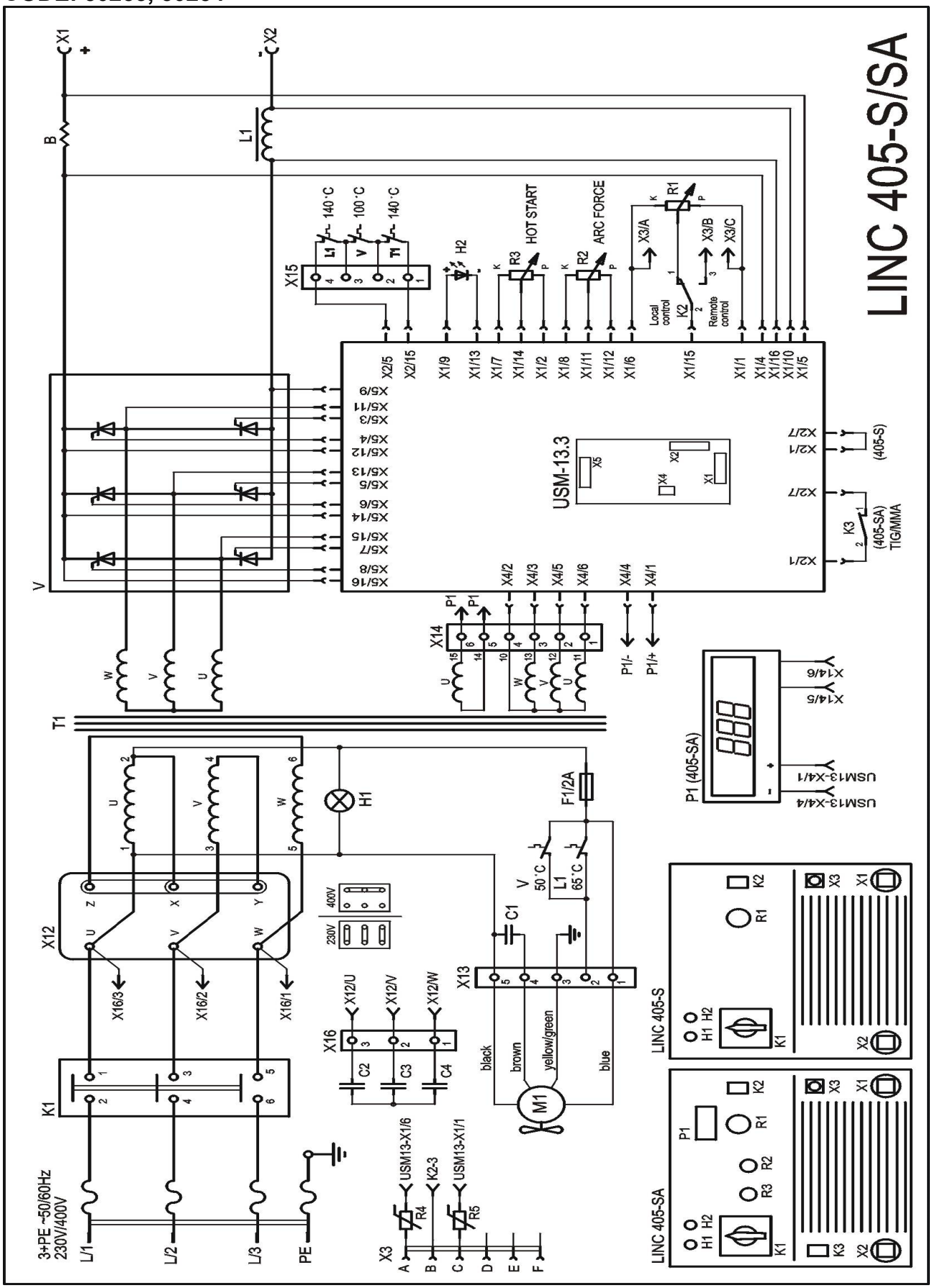
CODE: 50253, 50254