Operator's Manual

MAXsa™ 19 MSA

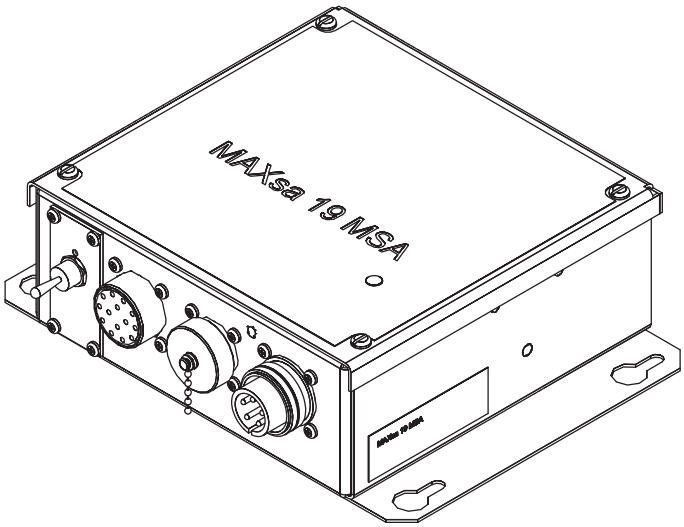

For use with machines having Code Numbers:

11886

Register your machine:
www.lincolnelectric.com/register

Authorized Service and Distributor Locator:
www.lincolnelectric.com/locator

Save for future reference

Date Purchased

Code: (ex: 10859)

Serial: (ex: U1060512345)

IM10126 | Issue Date Jun-13

© Lincoln Global, Inc. All Rights Reserved.

THE LINCOLN ELECTRIC COMPANY
22801 St. Clair Avenue • Cleveland, OH • 44117-1199 • U.S.A.
Phone: +1.216.481.8100 • www.lincolnelectric.com

THANK YOU FOR SELECTING A QUALITY PRODUCT BY LINCOLN ELECTRIC.

PLEASE EXAMINE CARTON AND EQUIPMENT FOR DAMAGE IMMEDIATELY

When this equipment is shipped, title passes to the purchaser upon receipt by the carrier. Consequently, claims for material damaged in shipment must be made by the purchaser against the transportation company at the time the shipment is received.

SAFETY DEPENDS ON YOU

Lincoln arc welding and cutting equipment is designed and built with safety in mind. However, your overall safety can be increased by proper installation ... and thoughtful operation on your part. **DO NOT INSTALL, OPERATE OR REPAIR THIS EQUIPMENT WITHOUT READING THIS MANUAL AND THE SAFETY PRECAUTIONS CONTAINED THROUGHOUT.** And, most importantly, think before you act and be careful.

⚠ WARNING

This statement appears where the information must be followed exactly to avoid serious personal injury or loss of life.

⚠ CAUTION

This statement appears where the information must be followed to avoid minor personal injury or damage to this equipment.

KEEP YOUR HEAD OUT OF THE FUMES.

DON'T get too close to the arc. Use corrective lenses if necessary to stay a reasonable distance away from the arc.

READ and obey the Safety Data Sheet (SDS) and the warning label that appears on all containers of welding materials.

USE ENOUGH VENTILATION or exhaust at the arc, or both, to keep the fumes and gases from your breathing zone and the general area.

IN A LARGE ROOM OR OUTDOORS, natural ventilation may be adequate if you keep your head out of the fumes (See below).

USE NATURAL DRAFTS or fans to keep the fumes away from your face.

If you develop unusual symptoms, see your supervisor. Perhaps the welding atmosphere and ventilation system should be checked.

WEAR CORRECT EYE, EAR & BODY PROTECTION

PROTECT your eyes and face with welding helmet properly fitted and with proper grade of filter plate (See ANSI Z49.1).

PROTECT your body from welding spatter and arc flash with protective clothing including woolen clothing, flame-proof apron and gloves, leather leggings, and high boots.

PROTECT others from splatter, flash, and glare with protective screens or barriers.

IN SOME AREAS, protection from noise may be appropriate.

BE SURE protective equipment is in good condition.

Also, wear safety glasses in work area **AT ALL TIMES.**

SPECIAL SITUATIONS

DO NOT WELD OR CUT containers or materials which previously had been in contact with hazardous substances unless they are properly cleaned. This is extremely dangerous.

DO NOT WELD OR CUT painted or plated parts unless special precautions with ventilation have been taken. They can release highly toxic fumes or gases.

Additional precautionary measures

PROTECT compressed gas cylinders from excessive heat, mechanical shocks, and arcs; fasten cylinders so they cannot fall.

BE SURE cylinders are never grounded or part of an electrical circuit.

REMOVE all potential fire hazards from welding area.

ALWAYS HAVE FIRE FIGHTING EQUIPMENT READY FOR IMMEDIATE USE AND KNOW HOW TO USE IT.

SECTION A: WARNINGS

CALIFORNIA PROPOSITION 65 WARNINGS

WARNING: Breathing diesel engine exhaust exposes you to chemicals known to the State of California to cause cancer and birth defects, or other reproductive harm.

- Always start and operate the engine in a well-ventilated area.
- If in an exposed area, vent the exhaust to the outside.
- Do not modify or tamper with the exhaust system.
- Do not idle the engine except as necessary.

For more information go to www.P65 warnings.ca.gov/diesel

WARNING: This product, when used for welding or cutting, produces fumes or gases which contain chemicals known to the State of California to cause birth defects and, in some cases, cancer. (California Health & Safety Code § 25249.5 *et seq.)*

WARNING: Cancer and Reproductive Harm www.P65warnings.ca.gov

ARC WELDING CAN BE HAZARDOUS. PROTECT YOURSELF AND OTHERS FROM POSSIBLE SERIOUS INJURY OR DEATH. KEEP CHILDREN AWAY. PACEMAKER WEARERS SHOULD CONSULT WITH THEIR DOCTOR BEFORE OPERATING.

Read and understand the following safety highlights. For additional safety information, it is strongly recommended that you purchase a copy of "Safety in Welding & Cutting - ANSI Standard Z49.1" from the American Welding Society, P.O. Box 351040, Miami, Florida 33135 or CSA Standard W117.2-1974. A Free copy of "Arc Welding Safety" booklet E205 is available from the Lincoln Electric Company, 22801 St. Clair Avenue, Cleveland, Ohio 44117-1199.

BE SURE THAT ALL INSTALLATION, OPERATION, MAINTENANCE AND REPAIR PROCEDURES ARE PERFORMED ONLY BY QUALIFIED INDIVIDUALS.

FOR ENGINE POWERED EQUIPMENT.

1.a. Turn the engine off before troubleshooting and maintenance work unless the maintenance work requires it to be running.

1.b. Operate engines in open, well-ventilated areas or vent the engine exhaust fumes outdoors.

1.c. Do not add the fuel near an open flame welding arc or when the engine is running. Stop the engine and allow it to cool before refueling to prevent spilled fuel from vaporizing on contact with hot engine parts and igniting. Do not spill fuel when filling tank. If fuel is spilled, wipe it up and do not start engine until fumes have been eliminated.

1.d. Keep all equipment safety guards, covers and devices in position and in good repair. Keep hands, hair, clothing and tools away from V-belts, gears, fans and all other moving parts when starting, operating or repairing equipment.

1.e. In some cases it may be necessary to remove safety guards to perform required maintenance. Remove guards only when necessary and replace them when the maintenance requiring their removal is complete. Always use the greatest care when working near moving parts.

1.f. Do not put your hands near the engine fan. Do not attempt to override the governor or idler by pushing on the throttle control rods while the engine is running.

1.g. To prevent accidentally starting gasoline engines while turning the engine or welding generator during maintenance work, disconnect the spark plug wires, distributor cap or magneto wire as appropriate.

1.h. To avoid scalding, do not remove the radiator pressure cap when the engine is hot.

ELECTRIC AND MAGNETIC FIELDS MAY BE DANGEROUS

2.a. Electric current flowing through any conductor causes localized Electric and Magnetic Fields (EMF). Welding current creates EMF fields around welding cables and welding machines

2.b. EMF fields may interfere with some pacemakers, and welders having a pacemaker should consult their physician before welding.

2.c. Exposure to EMF fields in welding may have other health effects which are now not known.

2.d. All welders should use the following procedures in order to minimize exposure to EMF fields from the welding circuit:

2.d.1. Route the electrode and work cables together - Secure them with tape when possible.

2.d.2. Never coil the electrode lead around your body.

2.d.3. Do not place your body between the electrode and work cables. If the electrode cable is on your right side, the work cable should also be on your right side.

2.d.4. Connect the work cable to the workpiece as close as possible to the area being welded.

2.d.5. Do not work next to welding power source.

ELECTRIC SHOCK CAN KILL.

3.a. The electrode and work (or ground) circuits are electrically "hot" when the welder is on. Do not touch these "hot" parts with your bare skin or wet clothing. Wear dry, hole-free gloves to insulate hands.

3.b. Insulate yourself from work and ground using dry insulation. Make certain the insulation is large enough to cover your full area of physical contact with work and ground.

In addition to the normal safety precautions, if welding must be performed under electrically hazardous conditions (in damp locations or while wearing wet clothing; on metal structures such as floors, gratings or scaffolds; when in cramped positions such as sitting, kneeling or lying, if there is a high risk of unavoidable or accidental contact with the workpiece or ground) use the following equipment:

- Semiautomatic DC Constant Voltage (Wire) Welder.
- DC Manual (Stick) Welder.
- AC Welder with Reduced Voltage Control.

3.c. In semiautomatic or automatic wire welding, the electrode, electrode reel, welding head, nozzle or semiautomatic welding gun are also electrically "hot".

3.d. Always be sure the work cable makes a good electrical connection with the metal being welded. The connection should be as close as possible to the area being welded.

3.e. Ground the work or metal to be welded to a good electrical (earth) ground.

3.f. Maintain the electrode holder, work clamp, welding cable and welding machine in good, safe operating condition. Replace damaged insulation.

3.g. Never dip the electrode in water for cooling.

3.h. Never simultaneously touch electrically "hot" parts of electrode holders connected to two welders because voltage between the two can be the total of the open circuit voltage of both welders.

3.i. When working above floor level, use a safety belt to protect yourself from a fall should you get a shock.

3.j. Also see Items 6.c. and 8.

ARC RAYS CAN BURN.

4.a. Use a shield with the proper filter and cover plates to protect your eyes from sparks and the rays of the arc when welding or observing open arc welding. Headshield and filter lens should conform to ANSI Z87. I standards.

4.b. Use suitable clothing made from durable flame-resistant material to protect your skin and that of your helpers from the arc rays.

4.c. Protect other nearby personnel with suitable, non-flammable screening and/or warn them not to watch the arc nor expose themselves to the arc rays or to hot spatter or metal.

FUMES AND GASES CAN BE DANGEROUS.

5.a. Welding may produce fumes and gases hazardous to health. Avoid breathing these fumes and gases. When welding, keep your head out of the fume. Use enough ventilation and/or exhaust at the arc to keep fumes and gases away from the breathing zone. **When welding hardfacing (see instructions on container or SDS) or on lead or cadmium plated steel and other metals or coatings which produce highly toxic fumes, keep exposure as low as possible and within applicable OSHA PEL and ACGIH TLV limits using local exhaust or mechanical ventilation unless exposure assessments indicate otherwise. In confined spaces or in some circumstances, outdoors, a respirator may also be required. Additional precautions are also required when welding on galvanized steel.**

5. b. The operation of welding fume control equipment is affected by various factors including proper use and positioning of the equipment, maintenance of the equipment and the specific welding procedure and application involved. Worker exposure level should be checked upon installation and periodically thereafter to be certain it is within applicable OSHA PEL and ACGIH TLV limits.

5.c. Do not weld in locations near chlorinated hydrocarbon vapors coming from degreasing, cleaning or spraying operations. The heat and rays of the arc can react with solvent vapors to form phosgene, a highly toxic gas, and other irritating products.

5.d. Shielding gases used for arc welding can displace air and cause injury or death. Always use enough ventilation, especially in confined areas, to insure breathing air is safe.

5.e. Read and understand the manufacturer's instructions for this equipment and the consumables to be used, including the Safety Data Sheet (SDS) and follow your employer's safety practices. SDS forms are available from your welding distributor or from the manufacturer.

5.f. Also see item 1.b.

WELDING AND CUTTING SPARKS CAN CAUSE FIRE OR EXPLOSION.

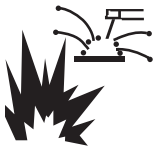

6.a. Remove fire hazards from the welding area. If this is not possible, cover them to prevent the welding sparks from starting a fire. Remember that welding sparks and hot materials from welding can easily go through small cracks and openings to adjacent areas. Avoid welding near hydraulic lines. Have a fire extinguisher readily available.

6.b. Where compressed gases are to be used at the job site, special precautions should be used to prevent hazardous situations. Refer to “Safety in Welding and Cutting” (ANSI Standard Z49.1) and the operating information for the equipment being used.

6.c. When not welding, make certain no part of the electrode circuit is touching the work or ground. Accidental contact can cause overheating and create a fire hazard.

6.d. Do not heat, cut or weld tanks, drums or containers until the proper steps have been taken to insure that such procedures will not cause flammable or toxic vapors from substances inside. They can cause an explosion even though they have been “cleaned”. For information, purchase “Recommended Safe Practices for the Preparation for Welding and Cutting of Containers and Piping That Have Held Hazardous Substances”, AWS F4.1 from the American Welding Society (see address above).

6.e. Vent hollow castings or containers before heating, cutting or welding. They may explode.

6.f. Sparks and spatter are thrown from the welding arc. Wear oil free protective garments such as leather gloves, heavy shirt, cuffless trousers, high shoes and a cap over your hair. Wear ear plugs when welding out of position or in confined places. Always wear safety glasses with side shields when in a welding area.

6.g. Connect the work cable to the work as close to the welding area as practical. Work cables connected to the building framework or other locations away from the welding area increase the possibility of the welding current passing through lifting chains, crane cables or other alternate circuits. This can create fire hazards or overheat lifting chains or cables until they fail.

6.h. Also see item 1.c.

6.I. Read and follow NFPA 51B “Standard for Fire Prevention During Welding, Cutting and Other Hot Work”, available from NFPA, 1 Batterymarch Park, PO box 9101, Quincy, MA 022690-9101.

6.j. Do not use a welding power source for pipe thawing.

CYLINDER MAY EXPLODE IF DAMAGED.

7.a. Use only compressed gas cylinders containing the correct shielding gas for the process used and properly operating regulators designed for the gas and pressure used. All hoses, fittings, etc. should be suitable for the application and maintained in good condition.

7.b. Always keep cylinders in an upright position securely chained to an undercarriage or fixed support.

7.c. Cylinders should be located:

- Away from areas where they may be struck or subjected to physical damage.
- A safe distance from arc welding or cutting operations and any other source of heat, sparks, or flame.

7.d. Never allow the electrode, electrode holder or any other electrically “hot” parts to touch a cylinder.

7.e. Keep your head and face away from the cylinder valve outlet when opening the cylinder valve.

7.f. Valve protection caps should always be in place and hand tight except when the cylinder is in use or connected for use.

7.g. Read and follow the instructions on compressed gas cylinders, associated equipment, and CGA publication P-I, “Precautions for Safe Handling of Compressed Gases in Cylinders,” available from the Compressed Gas Association, 14501 George Carter Way Chantilly, VA 20151.

FOR ELECTRICALLY POWERED EQUIPMENT.

8.a. Turn off input power using the disconnect switch at the fuse box before working on the equipment.

8.b. Install equipment in accordance with the U.S. National Electrical Code, all local codes and the manufacturer’s recommendations.

8.c. Ground the equipment in accordance with the U.S. National Electrical Code and the manufacturer’s recommendations.

Refer to http://www.lincolnelectric.com/safety for additional safety information.

TABLE OF CONTENTS

Page

Installation ..... **Section A**
Technical Specifications A-1
Safety Precautions A-2
Welding Voltage, Mechanical Hazards A-2
Location and Mounting A-2
High Frequency Protection A-2
Component Description A-3
Interfacing to the MAXsa™ 19 MSA A-4
Connection Diagrams A-4
Status Light A-5

Operation ..... **Section B**
Safety Precautions B-1
Design Features B-1
Common Welding Abbreviations B-1
Product Description. B-2
Recommended Processes and Equipment B-2

Accessories ..... **Section C**
General Options / Accessories C-1

Maintenance ..... **Section D**
Safety Precautions D-1
Routine D-1
Periodic D-1
Calibration Specification D-1

Troubleshooting ..... **Section E**
Safety Precautions E-1
How to Use Troubleshooting Guide E-1
Troubleshooting Guide ..... E-2 thru E-6

Diagrams ..... **Section F**
Wiring Diagram F-1
Dimension Print F-2

Parts Lists **P-703**

TECHNICAL SPECIFICATIONS: MAXsa™ 19 MSA

	INPUT VOLTAGE & CURRENT		PHYSICAL SIZE·				TEMPERATURE RATING	
			Dimensions					
Model	Voltage*	Input Amps*	Height	Width	Depth	Weight	Operating	Storage
K3172-1	40VDC	1.0	8.8 in. (224 mm)	10.38 in (264 mm)	3.12 in. (80 mm)	7 Lbs (3.2 Kg.)	14°F to 104°F (-10°C to 40°C)	-40°F to 185°F (-40°C to 85°C)

* When not driving a motor.

IP 23

SAFETY PRECAUTION

⚠ WARNING

ELECTRIC SHOCK can kill.

- **Only a qualified electrician should connect the MAXsa™ 19 MSA. Installation should be made in accordance with the appropriate National Electrical Code, the local codes and the information in this manual.**
- **Turn off the input power to the power source at the disconnect switch or fuse box before working on this equipment. Turn off the input power to any other equipment connected to the welding system at the disconnect switch or fuse box before working on this equipment.**
- **Do not touch electrically hot parts.**

WELDING VOLTAGE

Wire feed parts are electrically live while welding and while feeding wire (with Touch Sense feature selected). The electrically live parts are listed below:

Electrode	Electrode Reel
Wire Drive Motor	Drive Rolls
Gear Box	Cross-seam Adjuster
Wire Straightener	Welding Nozzle
Welding Cables	Welding Cable Terminal

⚠ CAUTION

- **Do not touch electrically live parts or electrodes with your skin or wet clothing.**
- **Insulate yourself from the work and ground.**
- **Always wear dry insulating gloves.**

MECHANICAL HAZARDS

- **Welding fixture or wire feeder will move during welding or inching. Keep away from pinch points.**
- **Electrode reel and drive rolls turn during welding or inching. Keep gloved hands away from areas that may catch the glove.**

LOCATION AND MOUNTING

The MAXsa™ 19 MSA will operate in harsh environments and can be used outdoors with an IP 23 rating. Even so, it is important that simple preventative measures are followed in order to assure long life and reliable operation. The MAXsa™ 19 MSA must be located where there is little risk of impacts to the Controller
.

HIGH FREQUENCY PROTECTION

Locate the MAXsa™ 19 MSA away from radio controlled machinery. The normal operation of the MAXsa™ 19 MSA may adversely affect the operation of RF controlled equipment, which may result in bodily injury or damage to the equipment.

CONTROL CABLE CONNECTIONS

GENERAL GUIDELINES

These guidelines apply to all communications cables including optional DeviceNet and Ethernet connections.

- **Genuine Lincoln control cables should be used at all times (except as noted otherwise).** Lincoln cables are specifically designed for the communication and power needs of the Power Wave/ MAXsa™ systems. Most are designed to be connected end to end for ease of operation.
- **Always use the shortest cable lengths possible. DO NOT coil excess cable. I**t is recommended that the total length of control cable does not exceed 100’ (30.5M). The use of non-standard cables in excess of 25’ (7.5M) can lead to communication problems (system shutdowns), poor motor acceleration (poor arc starting), and low wire driving force (wire feeding problems).
- **Best results will be obtained when the control cables are routed separate from the weld cables.** This minimizes the possibility of interference between the high currents flowing through the weld cables and the low level signals in the control cables.

INTERFACING TO THE MAXsa™ 19 MSA

The MAXsa™ 19 MSA is a versatile controller designed to operate in a Power Wave® AC/DC 1000 SD system and is responsible for relaying wire feed commands to a MAXsa™ 29 Wire Drive. It is connected to the Power Wave® AC/DC 1000 SD by a K2683-xx ArcLink Cable and to the Wire Drive by a K1785-xx 14 Pin Control Cable.

FIGURE A.1 - CONNECTION DIAGRAM

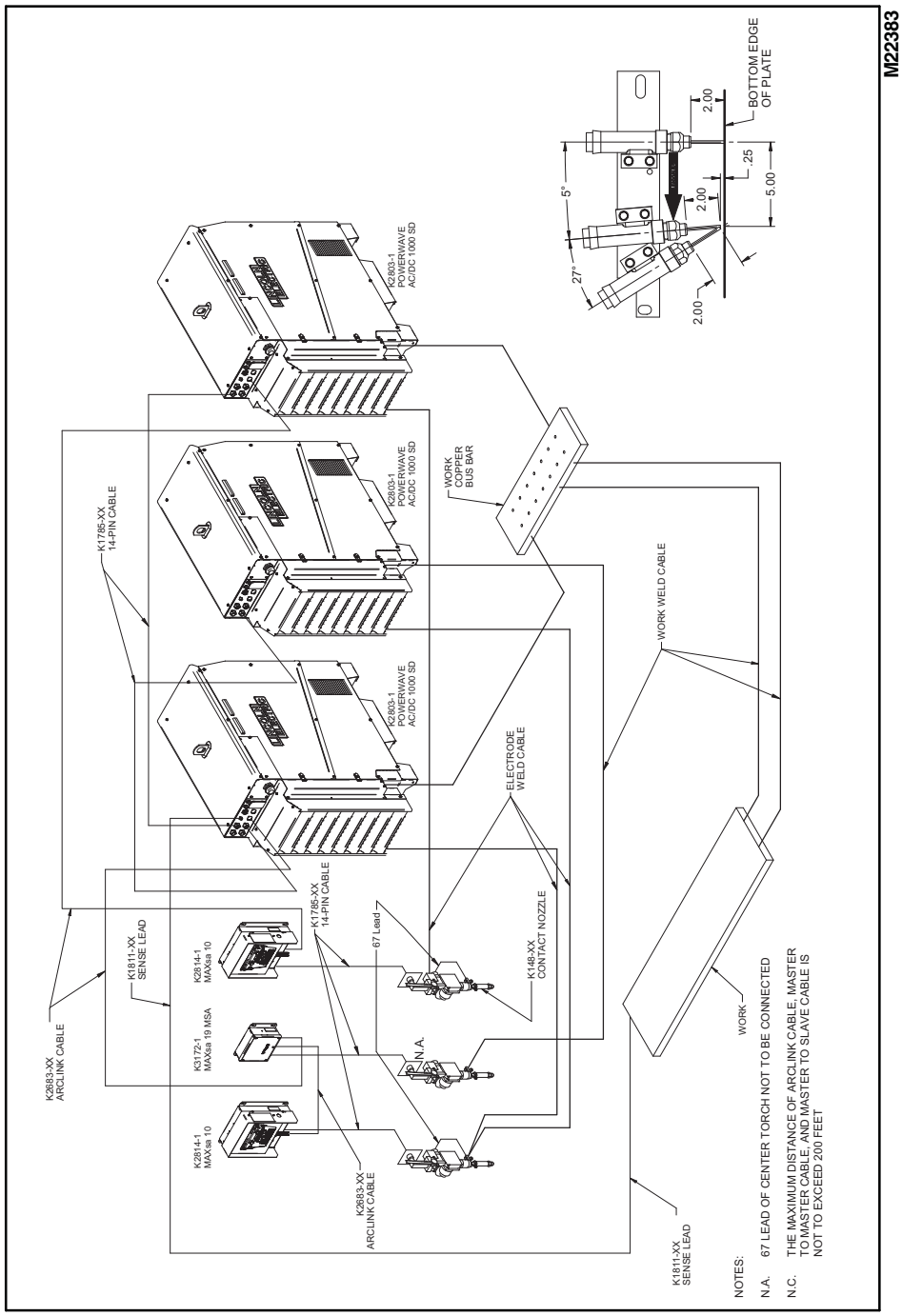

FIGURE A.2 - MAXsa™ 19 MSA COMPONENT DESCRIPTION

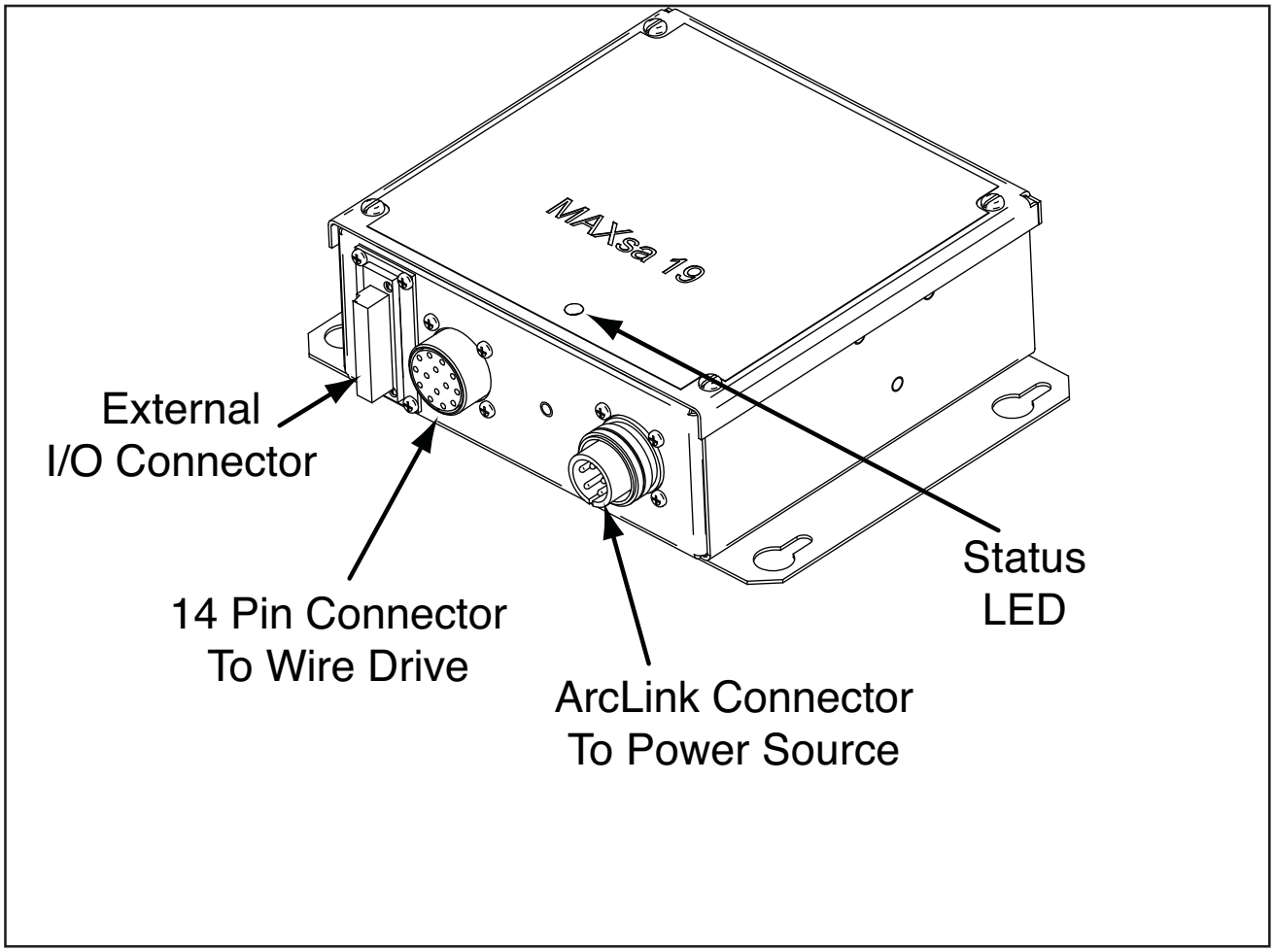

COLD INCH SWITCH

Cold inch will feed @ MAXsa™ 10 speed.

STATUS LIGHT

The Status Light is a two color LED that indicates the system condition. Normal operation is steady green. Flashing green or red/green indicates a system error. See the ***Troubleshooting Section.***

SELECTING A WIRE DRIVE AND GEAR RATIO

The MAXsa™ 19 MSA can accommodate a number of wire drives including the MAXsa™ 22 and MAXsa™ 29. The feeder control system must be configured for both the wire drive and the gear ratio. This can be accomplished with the Weld Manager Utility. This utility is on the Power Wave Submerged Arc Utilities CD, or available at **www.powerwavesoftware.com.**

SAFETY PRECAUTIONS

Read this entire section of operating instructions before operating the machine.

WARNING

ELECTRIC SHOCK can kill.

- **Do not touch electrically live parts or electrodes with your skin or wet clothing.**
- **Insulate yourself from the work and ground.**
- **Always wear dry insulating gloves.**
- **Do not use AC welder if your clothing, gloves or work area is damp or if working on, under or inside workpiece.**

Use the following equipment:
-DC manual (stick) welder.
-AC welder with reduced voltage control.

- **Do not operate with panels removed.**
- **Disconnect input power before servicing.**

ONLY QUALIFIED PERSONS SHOULD INSTALL, USE OR SERVICE THIS EQUIPMENT. READ AND FOLLOW THE MANUFACTURER'S INSTRUCTIONS, EMPLOYER'S SAFETY PRACTICES AND MATERIAL SAFETY DATA SHEETS (MSDS) FOR CONSUMABLES.

READ THIS WARNING, PROTECT YOURSELF AND OTHERS.

FUMES AND GASES can be dangerous.

- **Keep your head out of fumes.**
- **Use ventilation or exhaust at the arc, or both,to keep fumes and gases from your breathing zone and general area.**

WELDING SPARKS can cause fire or explosion.

- **Do not weld near flammable material.**
- **Do not weld on containers which have held flammable materia**

ARC RAYS can burn.

- **Wear eye, ear, and body protection.**

DESIGN FEATURES

- Digital communications for accurate and reliable performance.
- PC boards are potted in epoxy for the ultimate in outdoor protection.
- Connectors are filled with environmental protective grease.
- Designed for the Power Wave® AC/DC 1000 SD series of products for the best arc in the industry.
- Wire feed speed accuracy calibrated to within 2%.

COMMON WELDING ABBREVIATIONS

SAW
- Submerged Arc Welding

GRAPHIC SYMBOLS THAT APPEAR ON THIS MACHINE OR IN THIS MANUAL

WIRE FEEDER

MACHINE STATUS

ArcLink
INPUT CONNECTOR

ArcLink
OUTPUT CONNECTOR

PRODUCT DESCRIPTION

GENERAL PHYSICAL DESCRIPTION

The MAXsa™ 19 MSA is a versatile controller designed to operate in a Power Wave® AC/DC 1000 SD system and is responsible for relaying wire feed commands to a MAXsa™ wire drive. It is connected to the Power Wave® AC/DC 1000 SD by a K2683-xx ArcLink cable and to the wire drive by a K1785-xx 14 pin control cable

RECOMMENDED PROCESSES AND EQUIPMENT

- The MAXsa™ 19 MSA is intended for modified series arc welding only with the Power Wave® AC/DC 1000 SD, and the MAXsa™ Feed Head.

COMMON BASIC EQUIPMENT PACKAGES

Basic Package

- K2803-1 Power Wave® AC/DC 1000 SD
- K2312-2 MAXsa™ 29 Wire Drive
- K2626-2 MAXsa™ 19 MSA
- K2683-xx Control Cable (5 pin – 5 pin) - power source to MAXsa™ 19 MSA, or MAXsa™ 19 MSA to MAXsa 10.
- K1785-xx Control Cable (14 pin – 14 pin) - MAXsa™ 19 MSA to Wire Drive.

OPTIONS AND ACCESSORIES are available at www.lincolnelectric.com

Follow these steps:

1. Go to www.lincolnelectric.com

2. In the **Search** field type E9.181 and click on the **Search** icon (or hit 'Enter' on the keyboard).

3. On the Results page, scroll down to **Literature Request** in the list and click on it.

4. On the **Literature Request** page scroll down to E9.181 and view or download the PDF file.

All of the information for the Power Wave® System and accessories can be found in this document.

SAFETY PRECAUTIONS

⚠ WARNING

ELECTRIC SHOCK can kill.

- Do not touch electrically live parts such as output terminals or internal wiring.
- When inching, electrode and drive mechanism are “hot” to work and ground and could remain energized several seconds after the inch button is released.
- Turn OFF input power at welding power source before installation or changing drive roll and/or guide tubes.
- Welding power source must be connected to system ground per the National Electrical Code or any applicable local codes.
- Only qualified personnel should perform maintenance work.

See additional warning information throughout this operator’s manual and the Engine manual as well.

ROUTINE MAINTENANCE

- Check weld cables and control cables for cuts.

PERIODIC MAINTENANCE

- N/A

CALIBRATION SPECIFICATION

All calibration is factory set on the MAXsa™ 19 MSA.

HOW TO USE TROUBLESHOOTING GUIDE

⚠ WARNING

Service and Repair should only be performed by Lincoln Electric Factory Trained Personnel. Unauthorized repairs performed on this equipment may result in danger to the technician and machine operator and will invalidate your factory warranty. For your safety and to avoid Electrical Shock, please observe all safety notes and precautions detailed throughout this manual.

This Troubleshooting Guide is provided to help you locate and repair possible machine malfunctions. Simply follow the three-step procedure listed below.

Step 1. LOCATE PROBLEM (SYMPTOM).
Look under the column labeled "PROBLEM (SYMPTOMS)". This column describes possible symptoms that the machine may exhibit. Find the listing that best describes the symptom that the machine is exhibiting.

Step 2. POSSIBLE CAUSE.
The second column labeled "POSSIBLE CAUSE" lists the obvious external possibilities that may contribute to the machine symptom.

Step 3. RECOMMENDED COURSE OF ACTION
This column provides a course of action for the Possible Cause, generally it states to contact your local Lincoln Authorized Field Service Facility.

If you do not understand or are unable to perform the Recommended Course of Action safely, contact your local Lincoln Authorized Field Service Facility.

⚠ CAUTION

If for any reason you do not understand the test procedures or are unable to perform the tests/repairs safely, contact your **Local Lincoln Authorized Field Service Facility** for technical troubleshooting assistance before you proceed.

Observe all Safety Guidelines detailed throughout this manual

USING THE STATUS LED TO TROUBLESHOOT SYSTEM PROBLEMS

The MAXsa™ 19 MSA is equipped with a Status Light. If a problem occurs it is important to note the condition of the status lights. **Therefore, prior to cycling power to the system, check the power source status light for error sequences as noted below.**

Included in this section is information about the power source and Wire Drive Module Status LED's, and some basic troubleshooting charts for both machine and weld performance.

The STATUS LIGHTS are dual-color LED's that indicate system errors. Normal operation for each is steady green. Error conditions are indicated in the following Table E.1.

TABLE E.1

Light Condition	Meaning
Steady Green	System OK. Power source is operational, and is communicating normally with all healthy peripheral equipment connected to its ArcLink network.
Blinking Green	Occurs during power up or a system reset, and indicates the POWER WAVE® is mapping (identifying) each component in the system. Normal for first 1-10 seconds after power is turned on, or if the system configuration is changed during operation.
Fast Blinking Green	Under normal conditions indicates Auto-mapping has failed. Also used by the Weld Manager Utility (included on the POWER WAVE® Submerged Arc Utilities and Service Navigator CD's or available at www.powerwavesoftware.com) to identify the selected machine when connecting to a specific IP address.
Alternating Green and Red	Non-recoverable system fault. If the Status lights are flashing any combination of red and green, errors are present. **Read the error code(s) before the machine is turned off.** Error Code interpretation through the Status light is detailed in the Service Manual. Individual code digits are flashed in red with a long pause between digits. If more than one code is present, the codes will be separated by a green light. Only active error conditions will be accessible through the Status Light. Error codes can also be retrieved with the Weld Manager Utility (included on the POWER WAVE® Submerged Arc Utilities and Service Navigator CD's or available at www.powerwavesoftware.com). This is the preferred method, since it can access historical information contained in the error log. To clear the active error(s), turn power source off, and back on to reset.
Steady Red	Not applicable.
Blinking Red	Not applicable.

⚠ CAUTION

If for any reason you do not understand the test procedures or are unable to perform the tests/repairs safely, contact your **Local Lincoln Authorized Field Service Facility** for technical troubleshooting assistance before you proceed.

Observe all Safety Guidelines detailed throughout this manual

PROBLEMS (SYMPTOMS)		POSSIBLE CAUSE	RECOMMENDED COURSE OF ACTION
ARCLINK SYSTEM ERROR CODES			
Err 81	Motor Overload (long term)	1. The wire drive motor has overheated. Check that the electrode slides easily through feed system. 2. Remove tight bends from the feed conduit 3. Check that the wire reel brake is not too tight. 4. Verify a high quality electrode is being used. 5. Wait for the error to reset and the motor to cool (approximately 1 minute). 6. Long term average motor current limit has been exceeded. Typically indicates mechanical overload of system. If problem continues consider higher torque gear ratio (lower speed range).	If all recommended possible areas of misadjustment have been checked and the problem persists, Contact your local Lincoln Authorized Field Service Facility.
Err 82	Motor overload, short term.	1. The wire drive motor current draw has exceeded limits, usually because the motor is in a locked rotor state. Check that motor can turn freely when idle arm is open. 2. Verify that the gears are free of debris and dirt. 3. Check items listed for long term overload (Err 81).	

⚠ CAUTION

If for any reason you do not understand the test procedures or are unable to perform the tests/repairs safely, contact your **Local Lincoln Authorized Field Service Facility** for technical troubleshooting assistance before you proceed.

Observe all Safety Guidelines detailed throughout this manual

PROBLEMS (SYMPTOMS)		POSSIBLE CAUSE	RECOMMENDED COURSE OF ACTION
ARCLINK SYSTEM ERROR CODES			
Err 6311	Unstable or “noisy” wire feed speed (WFS) feedback signal.	1. Check the cables and connections to the Wire Drive. 2. Check the Wire Drive control cable routing (see Control Cable Connection- General Guidelines). 3. Check the Tachometer Interface Board.	If all recommended possible areas of misadjustment have been checked and the problem persists, Contact your local Lincoln Authorized Field Service Facility.

⚠ CAUTION

If for any reason you do not understand the test procedures or are unable to perform the tests/repairs safely, contact your **Local Lincoln Authorized Field Service Facility** for technical troubleshooting assistance before you proceed.

Observe all Safety Guidelines detailed throughout this manual

PROBLEMS (SYMPTOMS)	POSSIBLE CAUSE	RECOMMENDED COURSE OF ACTION
OUTPUT PROBLEMS		
The feeder does power up but there is no wire feed.	1. The control cable may be loose or damaged. Tighten, repair or replace the control cable. 2. Check for the proper command information from the customer supplied user interface.	
Inconsistent wire feeding or wire not feeding but drive rolls turning.	1. The electrode is rusty or dirty. Use only clean electrode. Use quality electrode, like L-50 or L-56 from Lincoln Electric. 2. The contact tip is partially melted or has spatter. Replace the contact tip. 3. Improper tip, drive rolls and/or inner wire guide. Verify the proper parts are installed. 4. Incorrect tension arm pressure on the drive rolls. Adjust the tension arm per the Instruction Manual. Most electrodes feed well at a tension arm setting of "3". 5. Worn drive roll. Replace the drive rolls if worn or filled with dirt.	If all recommended possible areas of misadjustment have been checked and the problem persists, Contact your local Lincoln Authorized Field Service Facility.

⚠ CAUTION

If for any reason you do not understand the test procedures or are unable to perform the tests/repairs safely, contact your **Local Lincoln Authorized Field Service Facility** for technical troubleshooting assistance before you proceed.

Observe all Safety Guidelines detailed throughout this manual

PROBLEMS (SYMPTOMS)	POSSIBLE CAUSE	RECOMMENDED COURSE OF ACTION
OUTPUT PROBLEMS		
Wire feed speed consistently operates at the wrong value.	1. The wire feeder gear setting is not properly set. Verify that the software setting matches the gear mounted. See the Instruction Manual for setting the gear ratio.	If all recommended possible areas of misadjustment have been checked and the problem persists, Contact your local Lincoln Authorized Field Service Facility.
Variable or "hunting" arc.	1. Wrong size, worn and/or melted contact tip. Replace the contact tip. 2. Worn work cable or poor work connection. Verify all work and electrode connections are tight and that the cables are in good condition. Clean/replace as necessary. 3. Wrong polarity. Adjust polarity to the recommended procedure. Verify DIP switch #7 setting matches the electrode polarity.	

⚠ CAUTION

If for any reason you do not understand the test procedures or are unable to perform the tests/repairs safely, contact your **Local Lincoln Authorized Field Service Facility** for technical troubleshooting assistance before you proceed.

MAXsa™ 19 MSA WIRING DIAGRAM

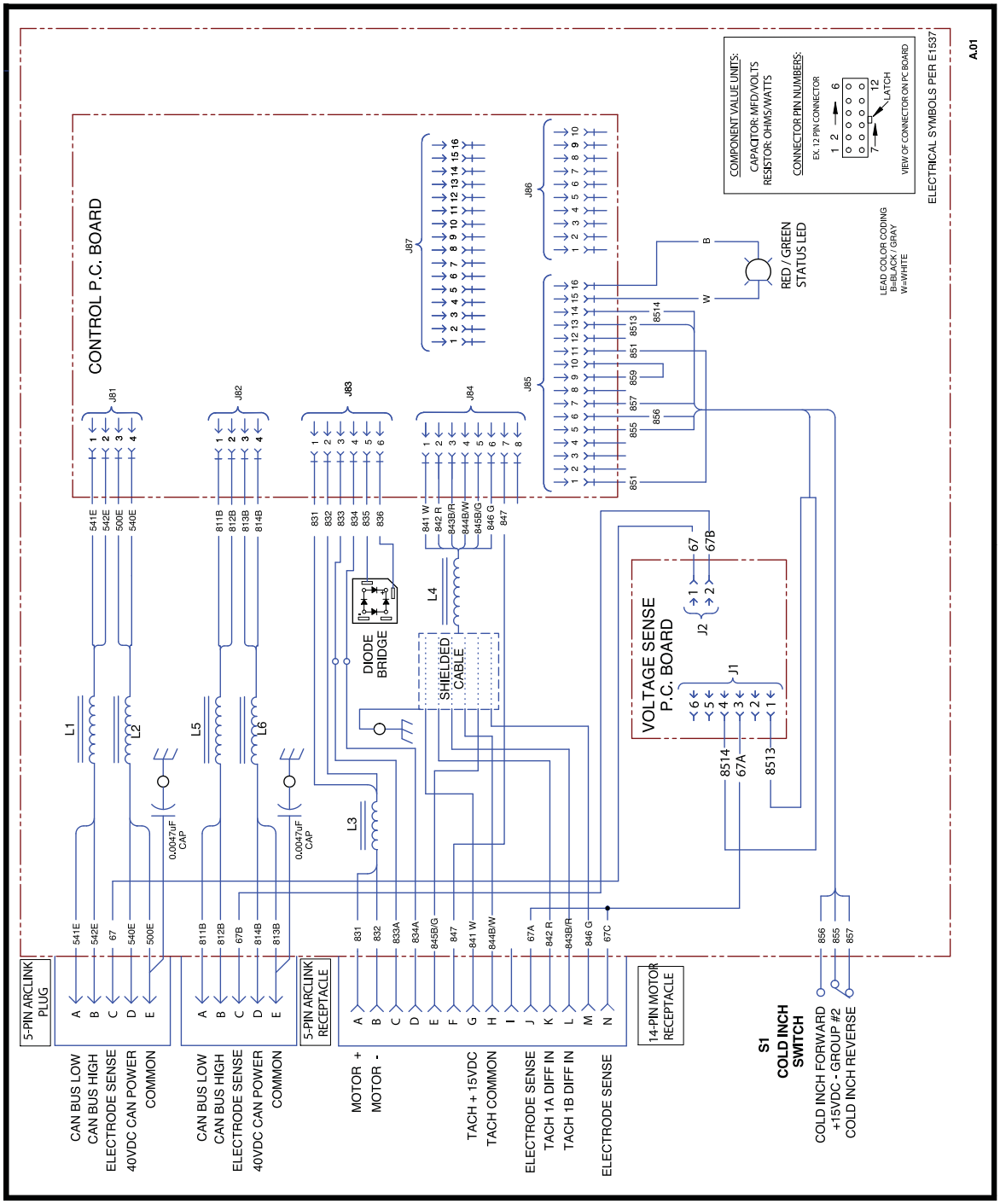

NOTE: This diagram is for reference only. It may not be accurate for all machines covered by this manual. The specific diagram for a particular code is pasted inside the machine on one of the enclosure panels. If the diagram is illegible, write to the Service Department for a replacement. Give the equipment code number.

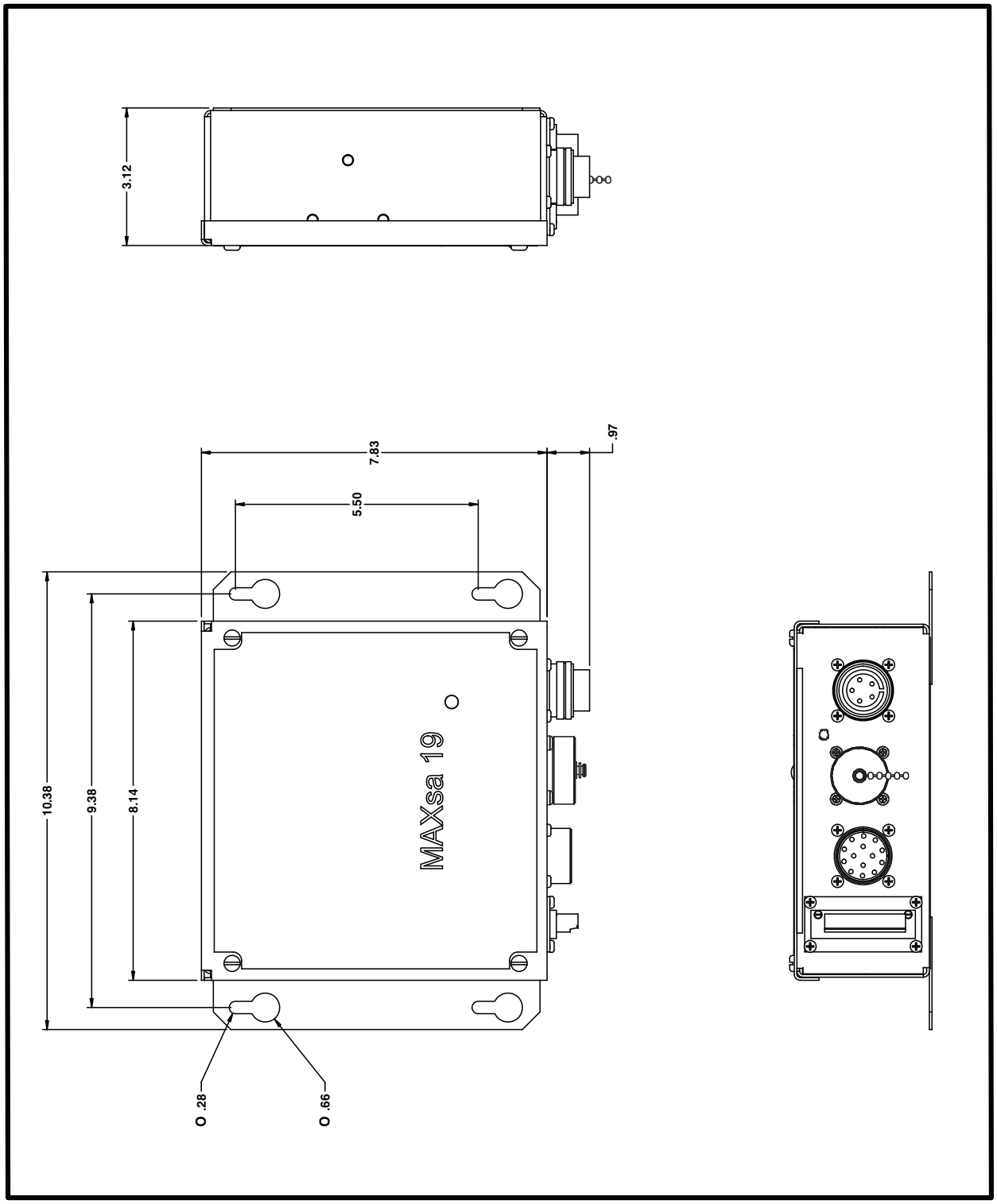
L13500
3.12
7.83
.97
5.50
10.38
9.38
8.14
MAXsa 19
O .28
O .66

NOTES

NOTES

NOTES

WARNING	● Do not touch electrically live parts or electrode with skin or wet clothing. ● Insulate yourself from work and ground.	● Keep flammable materials away.	● Wear eye, ear and body protection.
Spanish **AVISO DE PRECAUCION**	● No toque las partes o los electrodos bajo carga con la piel o ropa mojada. ● Aislese del trabajo y de la tierra.	● Mantenga el material combustible fuera del área de trabajo.	● Protéjase los ojos, los oídos y el cuerpo.
French **ATTENTION**	● Ne laissez ni la peau ni des vêtements mouillés entrer en contact avec des pièces sous tension. ● Isolez-vous du travail et de la terre.	● Gardez à l'écart de tout matériel inflammable.	● Protégez vos yeux, vos oreilles et votre corps.
German **WARNUNG**	● Berühren Sie keine stromführenden Teile oder Elektroden mit Ihrem Körper oder feuchter Kleidung! ● Isolieren Sie sich von den Elektroden und dem Erdboden!	● Entfernen Sie brennbarres Material!	● Tragen Sie Augen-, Ohren- und Körperschutz!
Portuguese **ATENÇÃO**	● Não toque partes elétricas e electrodos com a pele ou roupa molhada. ● Isole-se da peça e terra.	● Mantenha inflamáveis bem guardados.	● Use proteção para a vista, ouvido e corpo.
Japanese **注意事項**	● 通電中の電気部品、又は溶材にヒフやぬれた布で触れないこと。 ● 施工物やアースから身体が絶縁されている様にして下さい。	● 燃えやすいものの側での溶接作業は絶対にしてはなりません。	● 目、耳及び身体に保護具をして下さい。
Chinese **警 告**	● 皮肤或濕衣物切勿接觸帶電部件及銲條。 ● 使你自己與地面和工件絶緣。	● 把一切易燃物品移離工作場所。	● 佩戴眼、耳及身體勞動保護用具。
Korean **위 험**	● 전도체나 용접봉을 젖은 헝겁 또는 피부로 절대 접촉치 마십시요. ● 모재와 접지를 접촉치 마십시요.	● 인화성 물질을 접근 시키지 마시요.	● 눈, 귀와 몸에 보호장구를 착용하십시요.
Arabic **تحذير**	● لا تلمس الاجزاء التي يسري فيها التيار الكهربائي أو الالكترود بجلد الجسم أو بالملابس المبللة بالماء. ● ضع عازلا على جسمك خلال العمل.	● ضع المواد القابلة للاشتعال في مكان بعيد.	● ضع أدوات وملابس واقية على عينيك وأذنيك وجسمك.

READ AND UNDERSTAND THE MANUFACTURER'S INSTRUCTION FOR THIS EQUIPMENT AND THE CONSUMABLES TO BE USED AND FOLLOW YOUR EMPLOYER'S SAFETY PRACTICES.

SE RECOMIENDA LEER Y ENTENDER LAS INSTRUCCIONES DEL FABRICANTE PARA EL USO DE ESTE EQUIPO Y LOS CONSUMIBLES QUE VA A UTILIZAR, SIGA LAS MEDIDAS DE SEGURIDAD DE SU SUPERVISOR.

LISEZ ET COMPRENEZ LES INSTRUCTIONS DU FABRICANT EN CE QUI REGARDE CET EQUIPMENT ET LES PRODUITS A ETRE EMPLOYES ET SUIVEZ LES PROCEDURES DE SECURITE DE VOTRE EMPLOYEUR.

LESEN SIE UND BEFOLGEN SIE DIE BETRIEBSANLEITUNG DER ANLAGE UND DEN ELEKTRODENEINSATZ DES HERSTELLERS. DIE UNFALLVERHÜTUNGSVORSCHRIFTEN DES ARBEITGEBERS SIND EBENFALLS ZU BEACHTEN.

● Keep your head out of fumes. ● Use ventilation or exhaust to remove fumes from breathing zone.	● Turn power off before servicing.	● Do not operate with panel open or guards off.	**WARNING**
● Los humos fuera de la zona de respiración. ● Mantenga la cabeza fuera de los humos. Utilice ventilación o aspiración para gases.	● Desconectar el cable de alimentación de poder de la máquina antes de iniciar cualquier servicio.	● No operar con panel abierto o guardas quitadas.	Spanish **AVISO DE PRECAUCION**
● Gardez la tête à l'écart des fumées. ● Utilisez un ventilateur ou un aspirateur pour ôter les fumées des zones de travail.	● Débranchez le courant avant l'entretien.	● N'opérez pas avec les panneaux ouverts ou avec les dispositifs de protection enlevés.	French **ATTENTION**
● Vermeiden Sie das Einatmen von Schweibrauch! ● Sorgen Sie für gute Be- und Entlüftung des Arbeitsplatzes!	● Strom vor Wartungsarbeiten abschalten! (Netzstrom völlig öffnen; Maschine anhalten!)	● Anlage nie ohne Schutzgehäuse oder Innenschutzverkleidung in Betrieb setzen!	German **WARNUNG**
● Mantenha seu rosto da fumaça. ● Use ventilação e exhaustão para remover fumo da zona respiratória.	● Não opere com as tampas removidas. ● Desligue a corrente antes de fazer serviço. ● Não toque as partes elétricas nuas.	● Mantenha-se afastado das partes moventes. ● Não opere com os paineis abertos ou guardas removidas.	Portuguese **ATENÇÃO**
● ヒュームから頭を離すようにして下さい。 ● 換気や排煙に十分留意して下さい。	● メンテナンス・サービスに取りかかる際には、まず電源スイッチを必ず切って下さい。	● パネルやカバーを取り外したままで機械操作をしないで下さい。	Japanese **注意事項**
●頭部遠離煙霧。 ●在呼吸區使用通風或排風器除煙。	● 維修前切斷電源。	●儀表板打開或沒有安全罩時不準作業。	Chinese **警 告**
● 얼굴로부터 용접가스를 멀리하십시요. ● 호흡지역으로부터 용접가스를 제거하기 위해 가스제거기나 통풍기를 사용하십시요.	● 보수전에 전원을 차단하십시요.	● 판넬이 열린 상태로 작동치 마십시요.	Korean **위 험**
● ابعد رأسك بعيداً عن الدخان. ● استعمل التهوية أو جهاز ضغط الدخان للخارج لكي تبعد الدخان عن المنطقة التي تتنفس فيها.	● اقطع التيار الكهربائي قبل القيام بأية صيانة.	● لا تشغل هذا الجهاز اذا كانت الاغطية الحديدية الواقية ليست عليه.	Arabic **تحذير**

LEIA E COMPREENDA AS INSTRUÇÕES DO FABRICANTE PARA ESTE EQUIPAMENTO E AS PARTES DE USO, E SIGA AS PRÁTICAS DE SEGURANÇA DO EMPREGADOR.

使う機械や溶材のメーカーの指示書をよく読み、まず理解して下さい。そして貴社の安全規定に従って下さい。

請詳細閱讀並理解製造廠提供的説明以及應該使用的銀捍材料，並請遵守貴方的有関勞動保護規定。

이 제품에 동봉된 작업지침서를 숙지하시고 귀사의 작업자 안전수칙을 준수하시기 바랍니다.

اقرأ بتمعن وافهم تعليمات المصنع المنتج لهذه المعدات والمواد قبل استعمالها واتبع تعليمات الوقاية لصاحب العمل.

CUSTOMER ASSISTANCE POLICY

The business of The Lincoln Electric Company is manufacturing and selling high quality welding equipment, consumables, and cutting equipment. Our challenge is to meet the needs of our customers and to exceed their expectations. On occasion, purchasers may ask Lincoln Electric for advice or information about their use of our products. We respond to our customers based on the best information in our possession at that time. Lincoln Electric is not in a position to warrant or guarantee such advice, and assumes no liability, with respect to such information or advice. We expressly disclaim any warranty of any kind, including any warranty of fitness for any customer's particular purpose, with respect to such information or advice. As a matter of practical consideration, we also cannot assume any responsibility for updating or correcting any such information or advice once it has been given, nor does the provision of information or advice create, expand or alter any warranty with respect to the sale of our products.

Lincoln Electric is a responsive manufacturer, but the selection and use of specific products sold by Lincoln Electric is solely within the control of, and remains the sole responsibility of the customer. Many variables beyond the control of Lincoln Electric affect the results obtained in applying these types of fabrication methods and service requirements.

Subject to Change – This information is accurate to the best of our knowledge at the time of printing. Please refer to www.lincolnelectric.com for any updated information.

THE LINCOLN ELECTRIC COMPANY
22801 St. Clair Avenue • Cleveland, OH • 44117-1199 • U.S.A.
Phone: +1.216.481.8100 • www.lincolnelectric.com