Return to Master TOC
View Safety Info

GENUINE LINCOLN PARTS™

NOTE: This manual will cover most of the troubleshooting and repair procedures for the code numbers listed. Some variances may exist when troubleshooting/repairing later code numbers.

VRTEX® 360

For use with machines having Code Numbers:

AD1332-1
AD1332-2

SERVICE MANUAL

SVM200-A | Issue Date 10-Apr
© Lincoln Global, Inc. All Rights Reserved.

THE LINCOLN ELECTRIC COMPANY
22801 St. Clair Avenue • Cleveland, OH • 44117-1199 • U.S.A.
Phone: +1.216.481.8100 • www.lincolnelectric.com

⚠ WARNING

⚠ CALIFORNIA PROPOSITION 65 WARNINGS ⚠

Diesel engine exhaust and some of its constituents are known to the State of California to cause cancer, birth defects, and other reproductive harm.

The Above For Diesel Engines

The engine exhaust from this product contains chemicals known to the State of California to cause cancer, birth defects, or other reproductive harm.

The Above For Gasoline Engines

ARC WELDING CAN BE HAZARDOUS. PROTECT YOURSELF AND OTHERS FROM POSSIBLE SERIOUS INJURY OR DEATH. KEEP CHILDREN AWAY. PACEMAKER WEARERS SHOULD CONSULT WITH THEIR DOCTOR BEFORE OPERATING.

Read and understand the following safety highlights. For additional safety information, it is strongly recommended that you purchase a copy of "Safety in Welding & Cutting - ANSI Standard Z49.1" from the American Welding Society, P.O. Box 351040, Miami, Florida 33135 or CSA Standard W117.2-1974. A Free copy of "Arc Welding Safety" booklet E205 is available from the Lincoln Electric Company, 22801 St. Clair Avenue, Cleveland, Ohio 44117-1199.

BE SURE THAT ALL INSTALLATION, OPERATION, MAINTENANCE AND REPAIR PROCEDURES ARE PERFORMED ONLY BY QUALIFIED INDIVIDUALS.

FOR ENGINE powered equipment.

1.a. Turn the engine off before troubleshooting and maintenance work unless the maintenance work requires it to be running.

1.b. Operate engines in open, well-ventilated areas or vent the engine exhaust fumes outdoors.

1.c. Do not add the fuel near an open flame welding arc or when the engine is running. Stop the engine and allow it to cool before refueling to prevent spilled fuel from vaporizing on contact with hot engine parts and igniting. Do not spill fuel when filling tank. If fuel is spilled, wipe it up and do not start engine until fumes have been eliminated.

1.d. Keep all equipment safety guards, covers and devices in position and in good repair.Keep hands, hair, clothing and tools away from V-belts, gears, fans and all other moving parts when starting, operating or repairing equipment.

1.e. In some cases it may be necessary to remove safety guards to perform required maintenance. Remove guards only when necessary and replace them when the maintenance requiring their removal is complete. Always use the greatest care when working near moving parts.

1.f. Do not put your hands near the engine fan. Do not attempt to override the governor or idler by pushing on the throttle control rods while the engine is running.

1.g. To prevent accidentally starting gasoline engines while turning the engine or welding generator during maintenance work, disconnect the spark plug wires, distributor cap or magneto wire as appropriate.

1.h. To avoid scalding, do not remove the radiator pressure cap when the engine is hot.

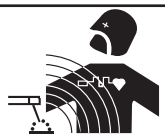

ELECTRIC AND MAGNETIC FIELDS may be dangerous

2.a. Electric current flowing through any conductor causes localized Electric and Magnetic Fields (EMF). Welding current creates EMF fields around welding cables and welding machines

2.b. EMF fields may interfere with some pacemakers, and welders having a pacemaker should consult their physician before welding.

2.c. Exposure to EMF fields in welding may have other health effects which are now not known.

2.d. All welders should use the following procedures in order to minimize exposure to EMF fields from the welding circuit:

2.d.1. Route the electrode and work cables together - Secure them with tape when possible.

2.d.2. Never coil the electrode lead around your body.

2.d.3. Do not place your body between the electrode and work cables. If the electrode cable is on your right side, the work cable should also be on your right side.

2.d.4. Connect the work cable to the workpiece as close as possible to the area being welded.

2.d.5. Do not work next to welding power source.

Return to Master TOC
Return to Master TOC
Return to Master TOC
Return to Master TOC

Return to Master TOC
Return to Master TOC
Return to Master TOC
Return to Master TOC

ELECTRIC SHOCK can kill.

3.a. The electrode and work (or ground) circuits are electrically "hot" when the welder is on. Do not touch these "hot" parts with your bare skin or wet clothing. Wear dry, hole-free gloves to insulate hands.

3.b. Insulate yourself from work and ground using dry insulation. Make certain the insulation is large enough to cover your full area of physical contact with work and ground.

In addition to the normal safety precautions, if welding must be performed under electrically hazardous conditions (in damp locations or while wearing wet clothing; on metal structures such as floors, gratings or scaffolds; when in cramped positions such as sitting, kneeling or lying, if there is a high risk of unavoidable or accidental contact with the workpiece or ground) use the following equipment:

- **Semiautomatic DC Constant Voltage (Wire) Welder.**
- **DC Manual (Stick) Welder.**
- **AC Welder with Reduced Voltage Control.**

3.c. In semiautomatic or automatic wire welding, the electrode, electrode reel, welding head, nozzle or semiautomatic welding gun are also electrically "hot".

3.d. Always be sure the work cable makes a good electrical connection with the metal being welded. The connection should be as close as possible to the area being welded.

3.e. Ground the work or metal to be welded to a good electrical (earth) ground.

3.f. Maintain the electrode holder, work clamp, welding cable and welding machine in good, safe operating condition. Replace damaged insulation.

3.g. Never dip the electrode in water for cooling.

3.h. Never simultaneously touch electrically "hot" parts of electrode holders connected to two welders because voltage between the two can be the total of the open circuit voltage of both welders.

3.i. When working above floor level, use a safety belt to protect yourself from a fall should you get a shock.

3.j. Also see Items 6.c. and 8.

ARC RAYS can burn.

4.a. Use a shield with the proper filter and cover plates to protect your eyes from sparks and the rays of the arc when welding or observing open arc welding. Headshield and filter lens should conform to ANSI Z87. I standards.

4.b. Use suitable clothing made from durable flame-resistant material to protect your skin and that of your helpers from the arc rays.

4.c. Protect other nearby personnel with suitable, non-flammable screening and/or warn them not to watch the arc nor expose themselves to the arc rays or to hot spatter or metal.

FUMES AND GASES can be dangerous.

5.a. Welding may produce fumes and gases hazardous to health. Avoid breathing these fumes and gases. When welding, keep your head out of the fume. Use enough ventilation and/or exhaust at the arc to keep fumes and gases away from the breathing zone. **When welding with electrodes which require special ventilation such as stainless or hard facing (see instructions on container or MSDS) or on lead or cadmium plated steel and other metals or coatings which produce highly toxic fumes, keep exposure as low as possible and within applicable OSHA PEL and ACGIH TLV limits using local exhaust or mechanical ventilation. In confined spaces or in some circumstances, outdoors, a respirator may be required. Additional precautions are also required when welding on galvanized steel.**

5. b. The operation of welding fume control equipment is affected by various factors including proper use and positioning of the equipment, maintenance of the equipment and the specific welding procedure and application involved. Worker exposure level should be checked upon installation and periodically thereafter to be certain it is within applicable OSHA PEL and ACGIH TLV limits.

5.c. Do not weld in locations near chlorinated hydrocarbon vapors coming from degreasing, cleaning or spraying operations. The heat and rays of the arc can react with solvent vapors to form phosgene, a highly toxic gas, and other irritating products.

5.d. Shielding gases used for arc welding can displace air and cause injury or death. Always use enough ventilation, especially in confined areas, to insure breathing air is safe.

5.e. Read and understand the manufacturer's instructions for this equipment and the consumables to be used, including the material safety data sheet (MSDS) and follow your employer's safety practices. MSDS forms are available from your welding distributor or from the manufacturer.

5.f. Also see item 1.b.

Return to Master TOC
Return to Master TOC
Return to Master TOC
Return to Master TOC

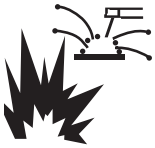

WELDING and CUTTING SPARKS can cause fire or explosion.

6.a. Remove fire hazards from the welding area. If this is not possible, cover them to prevent the welding sparks from starting a fire. Remember that welding sparks and hot materials from welding can easily go through small cracks and openings to adjacent areas. Avoid welding near hydraulic lines. Have a fire extinguisher readily available.

6.b. Where compressed gases are to be used at the job site, special precautions should be used to prevent hazardous situations. Refer to “Safety in Welding and Cutting” (ANSI Standard Z49.1) and the operating information for the equipment being used.

6.c. When not welding, make certain no part of the electrode circuit is touching the work or ground. Accidental contact can cause overheating and create a fire hazard.

6.d. Do not heat, cut or weld tanks, drums or containers until the proper steps have been taken to insure that such procedures will not cause flammable or toxic vapors from substances inside. They can cause an explosion even though they have been “cleaned”. For information, purchase “Recommended Safe Practices for the Preparation for Welding and Cutting of Containers and Piping That Have Held Hazardous Substances”, AWS F4.1 from the American Welding Society (see address above).

6.e. Vent hollow castings or containers before heating, cutting or welding. They may explode.

6.f. Sparks and spatter are thrown from the welding arc. Wear oil free protective garments such as leather gloves, heavy shirt, cuffless trousers, high shoes and a cap over your hair. Wear ear plugs when welding out of position or in confined places. Always wear safety glasses with side shields when in a welding area.

6.g. Connect the work cable to the work as close to the welding area as practical. Work cables connected to the building framework or other locations away from the welding area increase the possibility of the welding current passing through lifting chains, crane cables or other alternate circuits. This can create fire hazards or overheat lifting chains or cables until they fail.

6.h. Also see item 1.c.

6.I. Read and follow NFPA 51B “ Standard for Fire Prevention During Welding, Cutting and Other Hot Work”, available from NFPA, 1 Batterymarch Park, PO box 9101, Quincy, Ma 022690-9101.

6.j. Do not use a welding power source for pipe thawing.

CYLINDER may explode if damaged.

7.a. Use only compressed gas cylinders containing the correct shielding gas for the process used and properly operating regulators designed for the gas and pressure used. All hoses, fittings, etc. should be suitable for the application and maintained in good condition.

7.b. Always keep cylinders in an upright position securely chained to an undercarriage or fixed support.

7.c. Cylinders should be located:

- Away from areas where they may be struck or subjected to physical damage.
- A safe distance from arc welding or cutting operations and any other source of heat, sparks, or flame.

7.d. Never allow the electrode, electrode holder or any other electrically “hot” parts to touch a cylinder.

7.e. Keep your head and face away from the cylinder valve outlet when opening the cylinder valve.

7.f. Valve protection caps should always be in place and hand tight except when the cylinder is in use or connected for use.

7.g. Read and follow the instructions on compressed gas cylinders, associated equipment, and CGA publication P-I, “Precautions for Safe Handling of Compressed Gases in Cylinders,” available from the Compressed Gas Association 1235 Jefferson Davis Highway, Arlington, VA 22202.

FOR ELECTRICALLY powered equipment.

8.a. Turn off input power using the disconnect switch at the fuse box before working on the equipment.

8.b. Install equipment in accordance with the U.S. National Electrical Code, all local codes and the manufacturer’s recommendations.

8.c. Ground the equipment in accordance with the U.S. National Electrical Code and the manufacturer’s recommendations.

Refer to **http://www.lincolnelectric.com/safety** for additional safety information.

Return to Master TOC
Return to Master TOC
Return to Master TOC
Return to Master TOC

PRÉCAUTIONS DE SÛRETÉ

Pour votre propre protection lire et observer toutes les instructions et les précautions de sûreté specifiques qui parraissent dans ce manuel aussi bien que les précautions de sûreté générales suivantes:

Sûreté Pour Soudage A L'Arc

1. Protegez-vous contre la secousse électrique:

   a. Les circuits à l'électrode et à la piéce sont sous tension quand la machine à souder est en marche. Eviter toujours tout contact entre les parties sous tension et la peau nue ou les vétements mouillés. Porter des gants secs et sans trous pour isoler les mains.
   b. Faire trés attention de bien s'isoler de la masse quand on soude dans des endroits humides, ou sur un plancher metallique ou des grilles metalliques, principalement dans les positions assis ou couché pour lesquelles une grande partie du corps peut être en contact avec la masse.
   c. Maintenir le porte-électrode, la pince de masse, le câble de soudage et la machine à souder en bon et sûr état defonctionnement.
   d. Ne jamais plonger le porte-électrode dans l'eau pour le refroidir.
   e. Ne jamais toucher simultanément les parties sous tension des porte-électrodes connectés à deux machines à souder parce que la tension entre les deux pinces peut être le total de la tension à vide des deux machines.
   f. Si on utilise la machine à souder comme une source de courant pour soudage semi-automatique, ces precautions pour le porte-électrode s'applicuent aussi au pistolet de soudage.

2. Dans le cas de travail au dessus du niveau du sol, se protéger contre les chutes dans le cas ou on recoit un choc. Ne jamais enrouler le câble-électrode autour de n'importe quelle partie du corps.

3. Un coup d'arc peut être plus sévère qu'un coup de soliel, donc:

   a. Utiliser un bon masque avec un verre filtrant approprié ainsi qu'un verre blanc afin de se protéger les yeux du rayonnement de l'arc et des projections quand on soude ou quand on regarde l'arc.
   b. Porter des vêtements convenables afin de protéger la peau de soudeur et des aides contre le rayonnement de l'arc.
   c. Protéger l'autre personnel travaillant à proximité au soudage à l'aide d'écrans appropriés et non-inflammables.

4. Des gouttes de laitier en fusion sont émises de l'arc de soudage. Se protéger avec des vêtements de protection libres de l'huile, tels que les gants en cuir, chemise épaisse, pantalons sans revers, et chaussures montantes.

5. Toujours porter des lunettes de sécurité dans la zone de soudage. Utiliser des lunettes avec écrans lateraux dans les zones où l'on pique le laitier.

6. Eloigner les matériaux inflammables ou les recouvrir afin de prévenir tout risque d'incendie dû aux étincelles.

7. Quand on ne soude pas, poser la pince à une endroit isolé de la masse. Un court-circuit accidental peut provoquer un échauffement et un risque d'incendie.

8. S'assurer que la masse est connectée le plus prés possible de la zone de travail qu'il est pratique de le faire. Si on place la masse sur la charpente de la construction ou d'autres endroits éloignés de la zone de travail, on augmente le risque de voir passer le courant de soudage par les chaines de levage, câbles de grue, ou autres circuits. Cela peut provoquer des risques d'incendie ou d'echauffement des chaines et des câbles jusqu'à ce qu'ils se rompent.

9. Assurer une ventilation suffisante dans la zone de soudage. Ceci est particuliérement important pour le soudage de tôles galvanisées plombées, ou cadmiées ou tout autre métal qui produit des fumeés toxiques.

10. Ne pas souder en présence de vapeurs de chlore provenant d'opérations de dégraissage, nettoyage ou pistolage. La chaleur ou les rayons de l'arc peuvent réagir avec les vapeurs du solvant pour produire du phosgéne (gas fortement toxique) ou autres produits irritants.

11. Pour obtenir de plus amples renseignements sur la sûreté, voir le code "Code for safety in welding and cutting" CSA Standard W 117.2-1974.

PRÉCAUTIONS DE SÛRETÉ POUR LES MACHINES À SOUDER À TRANSFORMATEUR ET À REDRESSEUR

1. Relier à la terre le chassis du poste conformement au code de l'électricité et aux recommendations du fabricant. Le dispositif de montage ou la piece à souder doit être branché à une bonne mise à la terre.

2. Autant que possible, l'installation et l'entretien du poste seront effectués par un électricien qualifié.

3. Avant de faires des travaux à l'interieur de poste, la debrancher à l'interrupteur à la boite de fusibles.

4. Garder tous les couvercles et dispositifs de sûreté à leur place.

Return to Master TOC

⚠ WARNINGS

Do not place objects on the Table Arm or Weld Machine.

Handle the Face Mounted Display (FMD) integrated helmet with care. When not in use, the Helmet should be placed somewhere where it will not fall down or be harmed. If you will not be using the system for longer than 4 hours, shut down your unit.

Handle the VR SMAW device and VR GMAW/FCAW gun with care. When not in use, these items should be placed in the appropriate holders. These devices are customized and cannot be used on normal welding machines.

Handle the Coupons with care. When not in use, store them in the Coupon Drawer at the back of the Weld Machine.

During lightening storms, turn off the system and unplug it from any power outlets.

Return to Master TOC

Recycling Welding Equipment at End of Life

Waste Electrical and Electronic Equipment (WEEE)

Recycling

Recycling and reclamation of used electrical and electronic equipment is important to many nations and localities. Lincoln Electric provides information to assist in the recycling of welding equipment.

This parts list contains a “WEEE” column. The WEEE column describes potential recyclable materials. Materials that require selective treatment, according to national regulations, are also identified in the WEEE column.

The following table describes substances that are potentially recyclable. Components with high substance content are identified within the parts list. Easily identified and common components such as steel screws, steel nuts, steel washers and copper wire are not identified on the list, but are also recyclable. Some components may contain mixed substances.

Substance	Recyclable Material Identification
Steel, Iron	Fe
Aluminum	Al
Copper	Cu

WEEE in Europe

This instruction is mandatory for equipment in Europe that displays this symbol:

Do not dispose of electrical equipment together with normal waste!

In observance of European Directive 2002/96/EC on Waste Electrical and Electronic Equipment (WEEE) and its implementation in accordance with national law, electrical equipment that has reached the end of its life must be collected separately and returned to an environmentally compatible recycling facility. As the owner of the equipment, you should get information on approved collection systems from your local Lincoln representative. By applying this European Directive you will protect the environment and human health!

The following components must be removed from the welding equipment and shall be selectively treated. They shall be disposed of or recovered in compliance with Council Directive 75/442/EEC. They are identified within the parts pages:

Component	Selective Treatment Identification
Printed circuit boards with surface greater than 10 square centimeters	ST
Liquid crystal displays with surface greater than 100 square centimeters	ST
External electric cables (not all external cables are shown on parts pages)	ST
Electrolyte capacitors with height >25 mm and diameter >25 mm or proportionately similar in volume	ST

- MASTER TABLE OF CONTENTS FOR ALL SECTIONS -

Page

Safety . . . . . i-vi

Installation . . . . . Section A

Operation . . . . . Section B

Maintenance . . . . . Section D

Theory of Operation . . . . . Section E

Troubleshooting and Repair . . . . . Section F

Electrical Diagrams . . . . . Section G

Parts Manual P-638

TABLE OF CONTENTS - INSTALLATION SECTION

Return to Master TOC

Installation.....Section A

Graphic Symbols A-2

Technical Specifications A-3

Safety.....A-4

Location A-4

Environmental Area A-4

Stacking/Tilting/Lifting A-4

High Frequency Interference Protection A-4

General Description.....A-5

Design Features A-5

Hardware Uncrating & Set-up A-5/A-8

Return to Section TOC
Return to Master TOC

GRAPHIC SYMBOLS THAT APPEAR ON THIS MACHINE OR IN THIS MANUAL

INPUT POWER

ON

OFF

CIRCUIT BREAKER

INPUT POWER

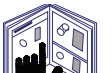
SINGLE PHASE
ALTERNATING CURRENT

READ THIS OPERATORS
MANUAL COMPLETELY

U_1 INPUT VOLTAGE

I_1 INPUT CURRENT

PROTECTIVE
GROUND

WARNING or CAUTION
Documentation must be consulted in all cases where this symbol is displayed.

Explosion

Dangerous Voltage

Shock Hazard

Shock Hazard

Return to Section TOC
Return to Master TOC

TECHNICAL SPECIFICATIONS: AD1332-1 (STD. FREQ.) / AD1332-2 (ALT. FREQ.)

VRTEX™ 360 - VIRTUAL REALITY WELDING TRAINER

INPUT			
MAKE/MODEL	DESCRIPTION	INPUT VOLTAGE +/- 10%	INPUT CURRENT (MAX.)
AD1332-1	Standard Frequency	115-230 VAC (50-60 HZ)	4A-2A Single Phase
AD1332-2	Alternate Frequency	115-230 VAC (50-60 HZ)	4A-2A Single Phase

⚠ WARNING

THIS PRODUCT INCORPORATES A PROTECTIVE EARTH IN THE AC POWER CORD. THE AC PLUG SHOULD ONLY BE INSERTED INTO A SOCKET OUTLET PROVIDED WITH A PROTECTIVE EARTH CONTACT.

TRACKING SYSTEM FREQUENCY		
MAKE/MODEL	DESCRIPTION	OPERATING FREQUENCY
AD1332-1	Standard Frequency	HIGH
AD1332-2	Alternate Frequency	LOW

PHYSICAL DIMENSIONS (MACHINE W/MONITOR)			
HEIGHT	WIDTH	DEPTH	WEIGHT
71.0 in. 1803 mm	30.0 in. 762 mm	50.0 in. 1270 mm	360 lbs. 163 kg.

PHYSICAL DIMENSIONS (STAND)			
HEIGHT	WIDTH	DEPTH	WEIGHT
78.0 in. 1981 mm	39.0 in. 990 mm	47.0 in. 1194 mm	102 lbs. 46 kg.

TEMPERATURE RANGES	
OPERATING TEMPERATURE RANGE	STORAGE TEMPERATURE RANGE
41° - 95° F 5° - 35° C	32° - 149° F 0° - 65° C

RELATIVE HUMIDITY	OPERATING ALTITUDES
80% For Temperatures Up To 88° F / 31° C 50% @ 104° F / 40° C	6562 Feet (2000 Meters)

ENVIRONMENT
This Product is Pollution Degree 1.

C 1 **THIS PRODUCT HAS BEEN TESTED TO THE REQUIREMENTS OF CAN/CSA-C22.2 NO. 61010-1, 2ND EDITION, INCLUDING AMENDMENT 1, OR A LATER VERSION OF THE SAME STANDARD INCORPORATING THE SAME LEVEL OF TESTING REQUIREMENTS.**

Return to Section TOC
Return to Master TOC

READ ENTIRE INSTALLATION SECTION BEFORE STARTING INSTALLATION.

Safety Precautions

⚠ WARNING

ELECTRIC SHOCK can kill.
- **Only qualified personnel should perform this installation.**
- **Turn the input power OFF and unplug the machine from the receptacle before working on this equipment.**
- **Insulate yourself from the work and ground.**
- **Always connect the VRTEX™ 360 to a power supply grounded according to the National Electrical Code and local codes.**

SELECT SUITABLE LOCATION

The machine will not operate in harsh environments. It is important that simple preventative measures are followed in order to assure long life and reliable operation. This product is for INDOOR USE ONLY.

- Dirt and dust that can be drawn into the machine should be kept to a minimum. Failure to observe these precautions can result in excessive operating temperatures and nuisance shutdown.
- Do not locate where monitor is exposed to direct sunlight.
- Do not place equipment near radiant heat sources.
- Do not place in a confined space. Allow a minimum of 3 feet of clearance around machine at all times. Adequate ventilation is necessary.
- The circuit breaker switch on the rear panel is the input power disconnect device. Do not position the equipment so that it is difficult to operate the circuit breaker.
- Route and protect power cable to minimize exposure to damage.

ENVIRONMENTAL AREA

Keep the machine inside and dry at all times. Do not place it on wet ground or in puddles. Never place liquids on top of the machine.

STACKING

The VRTEX™ 360 cannot be stacked.

TILTING

Place the VRTEX™ 360 directly on a secure, level surface.

LIFTING

If lifting the VRTEX™ 360 is required, use two straps, each rated for 500 pounds or more. Do not attempt to lift the VRTEX™ 360 with accessories attached to it.

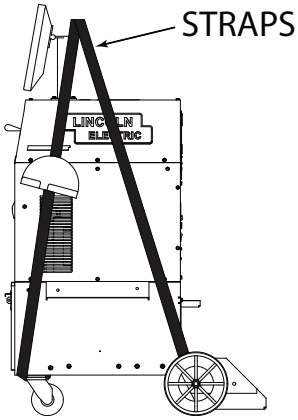

⚠ WARNING

- **Lift only with equipment of adequate lifting capacity.**
- **Be sure machine is stable when lifting.**
- **Do not operate machine while suspended or when lifting.**

FALLING EQUIPMENT can cause injury.

HIGH FREQUENCY INTERFERENCE PROTECTION

⚠ CAUTION

USE CAUTION WHEN OPERATING THIS MACHINE AROUND OTHER EQUIPMENT.

- **Large equipment, such as cranes, may interfere with the operation of this machine.**
- **This machine may interfere with the operation of other equipment in work/training area.**

Return to Section TOC
Return to Master TOC

GENERAL DESCRIPTION

The VRTEX™ 360 is a Virtual Welding Training System. This computer controlled interactive system simulates arc welding through the use of realistic puddle graphics and sounds. This training system is capable of simulating multiple arc welding processes on a wide variety of weld joint configurations. The VRTEX™ 360 represents the next generation of Virtual Reality (VR) welding training.

DESIGN FEATURES

HARDWARE OVERVIEW:

- Virtual Welding Machine, including:
  - o Monitor
  - o Coupon Drawer (back drawer)
  - o VR GMAW/FCAW Gun
  - o VR SMAW device
  - o VR GMAW/FCAW Gun holder
  - o VR SMAW device holder
  - o VR Helmet w/Face Mounted Display (FMD)
  - o Five VR Coupons - Flat Plate
    Tee Joint
    Groove Joint
    2” Pipe XXS
    6” Pipe Schedule 40

- Stand, including:
  - o Post
  - o Arm
  - o Table
  - o Pins
  - o Base
  - o Weights

HARDWARE UNCRATING:

TOOLS NEEDED
3/8” Wrench
3/16” Allen Wrench
Phillips Screwdriver

1. Decide on a location for your unit.

NOTE: The unit will take up approximately 8’ L x 8’ D x 8’ H. Keep approximately 3 feet in all directions of both the stand and VR weld machine free from obstruction. In addition, be conscious of where you are placing the unit to avoid magnetic fields, conductive, and high frequency objects and processes. Having these types of objects in the area can cause interference and result in increased jitter and/or distortion in the motion tracking.

For best results, do not install VRTEX™ 360 machine in the welding lab. Electrical interference from power lines, though generally small, can be present. Therefore all electrical power or lighting wiring within 50 feet of the welding area shall be enclosed in grounded rigid metallic conduit. In the event the VRTEX™ 360 is affected by interference, it is the user's responsibility to take steps to isolate and/or eliminate the interference.

An uninterruptible power supply (UPS) may be required for the protection of the system from power irregularities or disruption.

MULTIPLE SYSTEM INSTALLATIONS

If multiple units are required to operate together a unique frequency transmitter can be installed during the manufacturing process at Lincoln Electric to reduce potential interference between systems. AD1332-1 systems have a standard frequency source installed. AD1332-2 systems have an alternate frequency source installed. For multiple system installations, alternate the -1 and -2 systems for best operation:

For Example: If 8 systems are to be installed in the VR welding lab, the standard and alternate frequencies

-1	-2	-1	-2
-2	-1	-2	-1

2. Using the 3/8” wrench, remove the screws from the upper and lower front panels on the shipping crate.

NOTE: The rear of the crate is nailed on. Do not remove at this time.

Return to Section TOC
Return to Master TOC

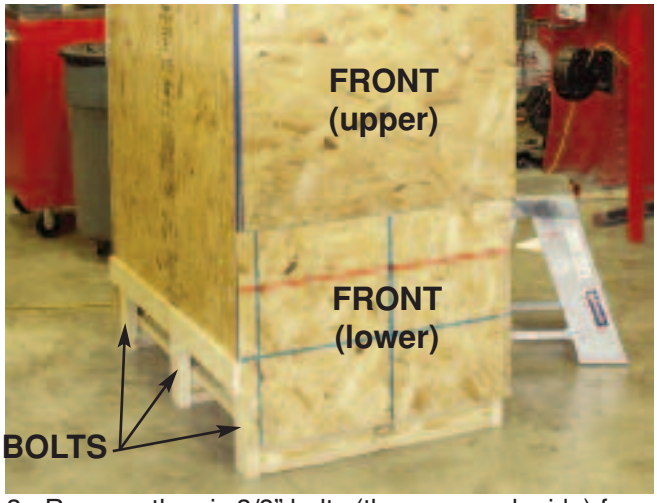

3. Remove the six 3/8” bolts (three on each side) from the bottom of the crate assembly.

4. Carefully slide the crate assembly from the VRTEX™ 360.

5. Slide towards the rear of the machine. Be careful to avoid damaging the welding device holders located on each side of the machine.

6. Carefully remove the post (long rectangular shaped cardboard box) from the crate.

7. Carefully cut and remove plastic wrapping.

8. Remove the monitor from the back of the machine.

9. Using the 3/8” wrench, remove the two screws from the rear base securing the unit to the wooden crate.

10. Remove the four screws from the wooden rear cross brace.

11. Remove the wooden cross brace while ensuring the unit is steady and secure.

12. Carefully roll the machine off the rear of the skid. Ramping may be required.

13. Uncrate and unpack the table and table base.

Return to Section TOC
Return to Master TOC

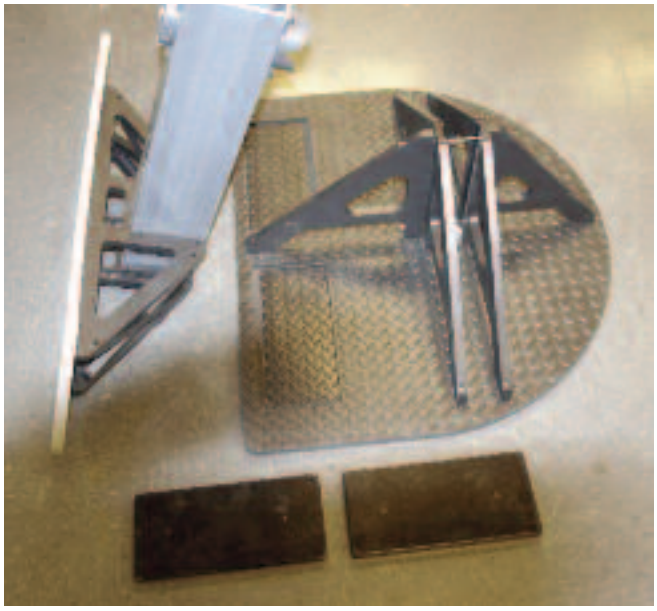

14. Insert the input supply power cord into the back of the VRTEX™ 360 and into a standard electrical outlet capable of 115 to 230 VAC at 4 to 2 Amps.

TABLE & SWING ARM SET-UP:

1. Using the 3/16" allen wrench, remove the two ¼" x 20 Allen-head screws from the base assembly.

NOTE: The longer screw is in the top.

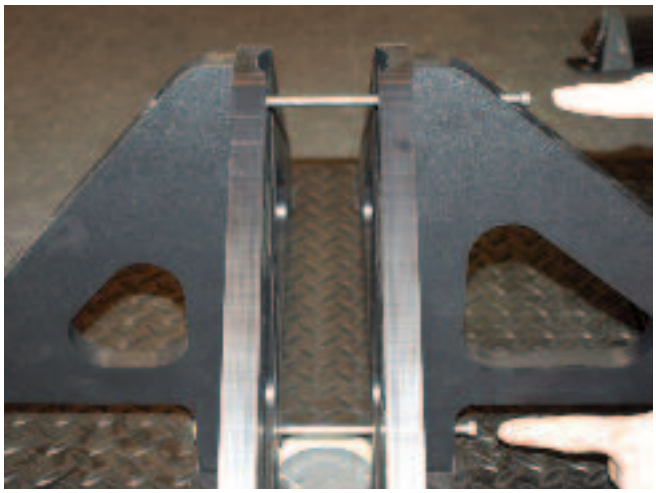

2. Insert red post into base assembly aligning the flat on the pole with the hole.

NOTE: The post will only insert one way.

3. Using the 3/16" allen wrench, secure the post into position and tighten.

4. Obtain the three post collar pins from the factory packaging of the VRTEX™ 360.

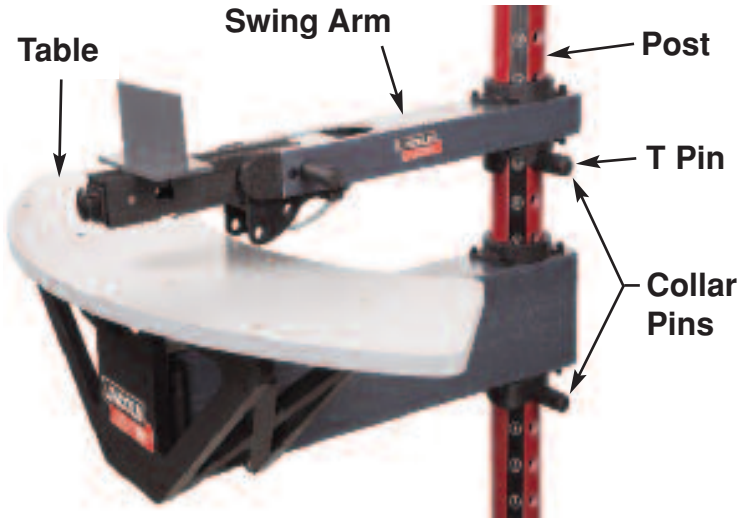

5. Insert one of the collar pins into the post at the #6 location.

6. From the top, slide the table onto the post letting it rest on the collar pin inserted in previous step.

7. Insert the second collar pin into the post at the #13 position.

8. Obtain swing-arm from the rear of the VRTEX™ 360 by removing the cable ties from the swing arm and cable. Grey cable should remain connected to the VRTEX™ 360 (DO NOT CUT!).

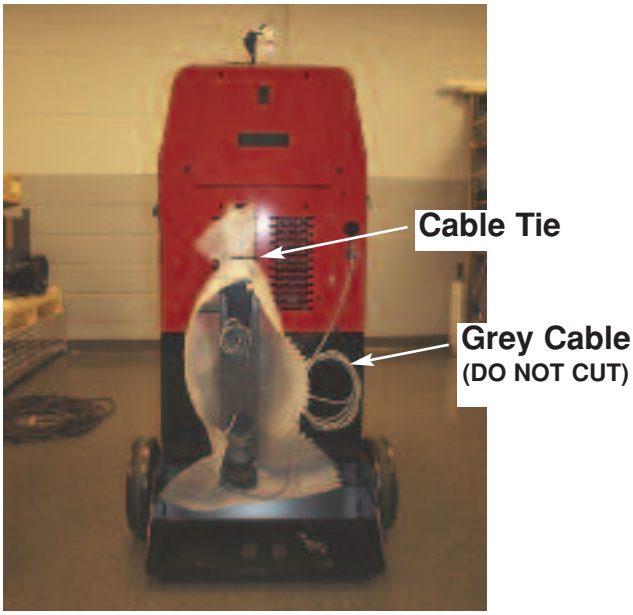

9. Carefully slide swing-arm onto post with the letters (on the collar) “ABC” up and the grey cable located on the bottom of the swing arm assembly.

10. Insert a third collar pin at a convenient height for holding the helmet.

MONITOR:

1. Remove monitor from cardboard box.

2. Remove the cable ties from monitor cables secured to the monitor mounting post.

MONITOR (Mounting Screws)

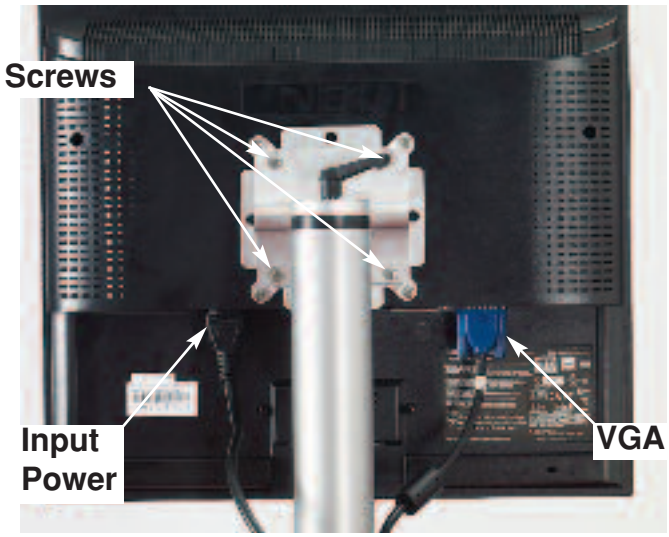

3. Using a Phillips-head screwdriver, carefully mount the monitor onto the mounting post bracket. Tighten the four Phillips-head screws securely.

4. Install input power cable and VGA cable into the monitor.

ADDITIONAL FEATURES:

1. The welding coupons are stored in the coupon drawer in the rear of the machine.

2. The weld simulation can be displayed on an external monitor or projector by using the SVGA output on the back of the machine. The external display must support 1024x780 resolution.

3. External speakers may be connected using the audio jack located on the back of the machine.

TRACKING SYSTEM FUNDAMENTALS:

The magnetic tracking system is composed of the following:

- Control Unit (Inside VR Machine)
  - o Contains the hardware and software necessary to compute position and orientation.

- Source (part of the Swing Arm)
  - o The source contains electromagnetic coils enclosed in a plastic shell that emit a magnetic field. The source is the system’s reference frame for sensor measurements.

- Sensor (in the VR GMAW/FCAW gun, VR SMAW device, and helmet)
  - o The sensor contains electromagnetic coils enclosed in a plastic shell that detect the magnetic fields emitted by the source. The sensor’s position and orientation are precisely measured as it moves in reference to the source. The sensor is completely passive, having no active voltage applied to it.

Return to Section TOC
Return to Master TOC

NOTES

A-9

Return to Section TOC
Return to Master TOC
Return to Section TOC
Return to Master TOC
Return to Section TOC
Return to Master TOC
Return to Section TOC
Return to Master TOC

TABLE OF CONTENTS - OPERATION SECTION

Return to Master TOC

Operation **B-1**

Product Description B-2
User Interface Overview B-3
Hardware Specifications B-4/B-5
Powering Up B-7
Login Screen B-7/B-8
Joint Configuration B-9
Process Selection B-10
Stand Set-up B-10
VR Coupons B-10
Table/Arm Rotation B-11
Environment B-12
VR Gas Set-up B-12
Weld Machine Settings B-13
Push Buttons B-14
Welders View B-15
Instructors View B-15
LASER (Live Action Student Evaluation Report) B-16
Technique Parameters B-16
Position B-17
Work/Travel Angle B-18
Pass Number B-19
Timing/Direction/Discontinuities B-19
Instructor Mode B-20
Updates B-20
Weldometer™ B-21
Tolerance Editor B-22
Choosing Tolerance Set-up B-23
Choosing Tolerance To Load B-23
Tolerances Screen(s) B-23/B-26
Tolerances Whip & Travel Speed B-27
Default Weld Processes Settings B-28

Return to Section TOC
Return to Master TOC

PRODUCT DESCRIPTION

The VRTEX™ 360 is a virtual reality arc welding training machine only and NOT a real arc welding machine. Please be aware of all standard safety practices associated with welding. Some standard warnings are included in this manual.

If the equipment is used in a manner not specified by the manufacturer, the protection provided to the equipment and user may be impaired.

Access panels are not to be removed except by qualified service personnel due to risk of electric shock from accessible live parts.

FRONT OF MACHINE

VRTEX ™ 360

LINCOLN® ELECTRIC

Return to Section TOC
Return to Master TOC

USER INTERFACE OVERVIEW

The VRTEX™ 360 is a virtual reality arc welding trainer. This computer based training system is an educational tool designed to allow students to practice their welding technique in a simulated environment. It promotes the efficient transfer of welding skills to the welding booth, while reducing material waste and energy consumption associated with traditional welding training.

See figure on page B-2 for locations of operator controls and indicators.

1. The **monitor** allows the student to view the setup menu selections and also provides an active view of the actual welding process for teachers and students. The monitor can be rotated for ease of viewing. Make certain the power button on the monitor is ON and the green LED is lit.
2. By moving the **joystick**, the operator can navigate through various menu options.
3. The **colored buttons** correlate to the colored rectangles present at the bottom of the monitor when the simulation software is running. These buttons perform various functions depending upon the command shown in the corresponding box on the screen.
4. The **wire feed speed/amperage dial** allows the user to input wire feed speed/amperage.
5. The **voltage dial** allows the user to input the welding voltage. This dial also allows input of trim values when pulse process is in use.
6. The **white screen select arrows** allow the operator to cycle through various screens.
7. The **process selector switch** permits the selection of welding process. (GMAW, FCAW, OR SMAW)
8. The **polarity selector switch** permits the selection of the welding polarity for any given process. (DC+, DC-, or AC).
9. The **USB port** is used to upload software and download user data from the software.
10. The **key switch** is located on the lower right of the control panel. When the system is in the login screen the instructor may insert a key (shipped with the system) into the key lock and then rotate it 90 degrees to the right. This will permit access to the Weldometer™, Tolerance Editor, Options and Update screens.

11 Pressing and holding (3 seconds) the **green circular button** powers up the VRTEX™ 360 system.

Note: It does not power down the system.

12. The **red select button** accepts (enters) the data displayed or highlighted on the monitor.
13. **VR GMAW/FCAW** gun holder.
14. **VR SMAW** device holder.

Return to Section TOC
Return to Master TOC

HARDWARE SPECIFICS:

VR GMAW/FCAW GUN

The VR GMAW/FCAW gun should be placed on the round gun holder on the right side when not in use. The VR gun has a trigger that is used during the simulation of GMAW and FCAW processes to initiate and maintain the simulated welding arc.

VR GMAW/FCAW GUN

⚠ CAUTION

Store gun as shown below to avoid damage.

VR GMAW/FCAW GUN (Properly Stored)

VR SMAW DEVICE

The VR SMAW device has a rod representing an electrode. This rod retracts when a virtual arc is struck to simulate the electrode burning off during the virtual welding process. When the virtual electrode is fully used up, the rod will stop retracting. When the user presses “new stick” in the orange actions menu button, the rod extends out, simulating that a new electrode was put into the VR SMAW device. When not in use, the VR SMAW device should be placed in the VR SMAW holder on the left side of the VR weld machine.

In order to strike an arc with the VR SMAW device, strike or tap the tip of the rod (of the VR SMAW device) on the coupon being welded. To break the arc, move the VR SMAW device rod away from the work piece.

⚠ CAUTION

Do not try to strike the arc with excessive force, as the arc start is distance based. Excessive force may result in damage to the VR SMAW device.

The angle of the rod can be changed by squeezing the clamp of the VR SMAW device. This allows the rod to be moved into the 45 or 90 degree position. Once the rod is at one of these angles, release the clamp. The rod should now be fixed in that position. **Do not change the rod angle while the rod is extending or retracting.**

VR SMAW DEVICE

⚠ CAUTION

Store device as shown below to avoid damage.

VR SMAW DEVICE (Properly Stored)

Return to Section TOC
Return to Master TOC

Helmet

Users should first adjust the helmet so it fits comfortably. Adjustments can be made by depressing and turning the knob at the back of the helmet in until the desired size is achieved. If necessary, the user may also have to adjust the top crown adjustment to fit their head size.

HELMET FUNCTIONS

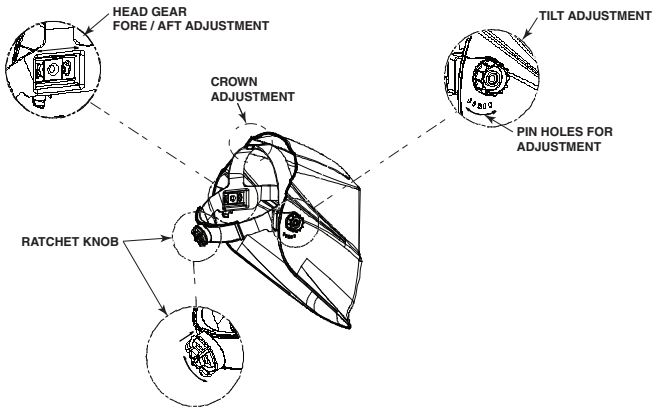

The helmet has an FMD (Face Mounted Display) on the inside. These FMD lenses display the virtual weld and environment to the user. The lenses can be shifted left and right to fit comfortably by applying gentle pressure. In addition, the lenses can be shifted forward and back. The user should make sure the lenses are parallel to their eyes. Keep the lenses clean at all times. See Cleaning and Maintenance Section.

HELMET LENSES

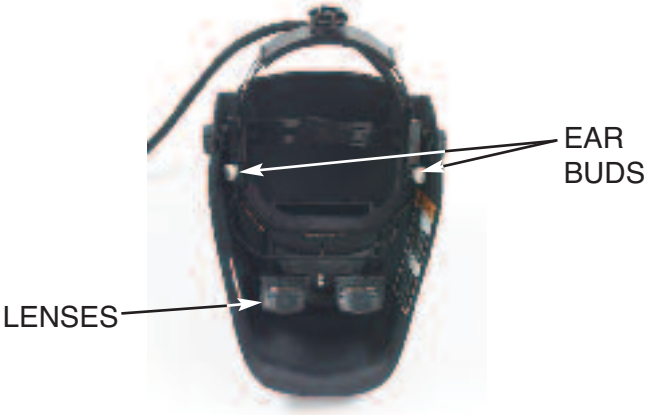

When not in use, the helmet should be hung from the stand or placed in the right front drawer to avoid being damaged.

Coupon Drawer

The coupon drawer houses the physical coupons. When not in use, the coupons should be stored there. To open the drawer, press the top indent down, and slide the drawer out. Each coupon fits in its own area defined by the foam locator in the drawer.

COUPON DRAWER

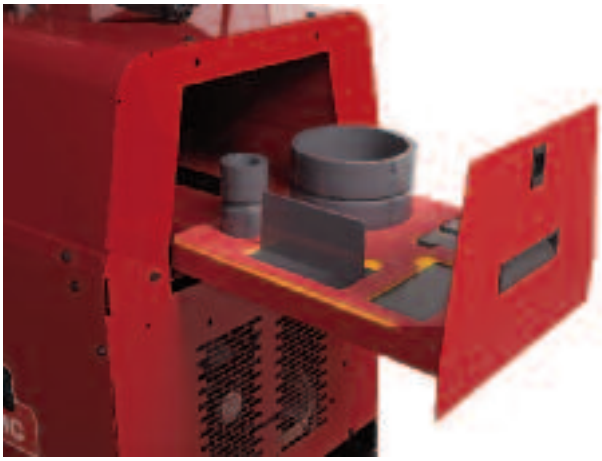

Coupons

The coupons represent the various workpieces that the user will virtually weld. During the virtual welding process, they provide physical feedback to the student. The coupons have been factory calibrated at Lincoln Electric.

There are five VR Coupons:

1. Flat Plate
2. Tee Joint
3. 3/8” Groove Joint w/Backing Bar
4. 2” Diameter XXS Pipe
5. 6” Diameter Schedule 40 Pipe

COUPONS

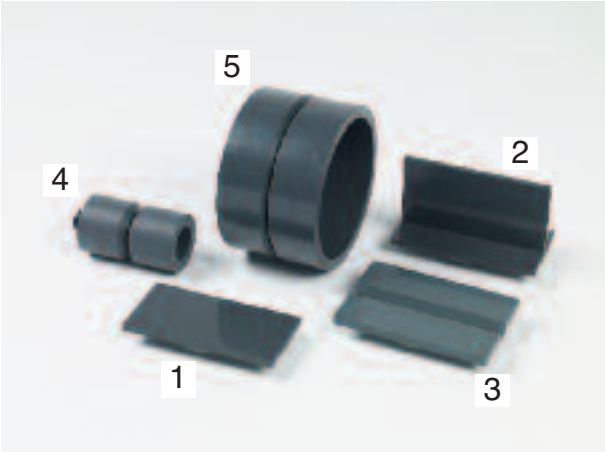

Return to Section TOC
Return to Master TOC

Stand

The stand is comprised of the post, arm, table, collar pins, base and two weights. Users should position themselves at the stand during virtual welding.

Post

The arm and table slide up and down and rest on the collar pins that are inserted into the post. Hole numbers 0 through 28 indicate position of welding for program accuracy. The position is read by identifying the numbered hole that the pin has been inserted into.

POST W/PIN INSERTED IN #18

Coupon Positioning In Swing Arm

The coupons can be inserted into the arm to accommodate flat, horizontal, vertical or overhead welding positions. The knob on the front of the swing arm can be pulled out for coupons to be inserted or removed and pushed in for coupons to be secured. The front of the swing arm can be rotated down at a 45 or 90-degree angle to allow 2G, 5G and 6G pipe welding positions. The arm can also be rotated around the post to comfortably accommodate left and right handed welders or simulate specific welding applications.

COUPON INSERTION / REMOVAL

⚠ CAUTION

Do not use excessive force when inserting and removing coupons into the arm.

SWING ARM ROTATION

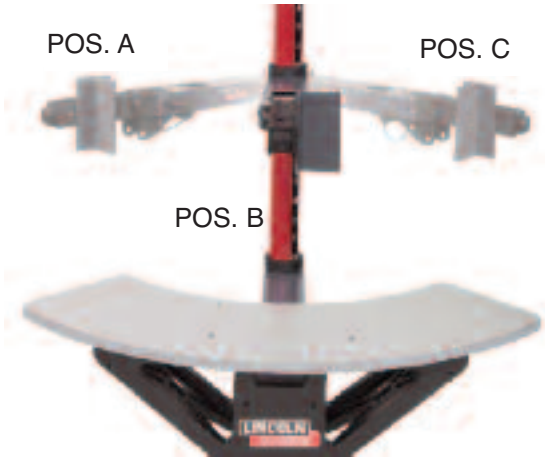

Table

The table can be used to gain stability and learn proper body positioning. The base supports the stand and has weights on the back to maintain stability. The table can be swung out of the way when not in use.

⚠ CAUTION

Do not use the Stand/Table without the base counter weights properly positioned.

TABLE ROTATION

Return to Section TOC
Return to Master TOC

Powering Up Your System:

1. After you have set up the hardware and have become familiar with the user controls, you will be ready to use your system.

2. Plug power cord into a standard outlet.

3. Press and hold the green circular button on the front panel until it lights up and you hear fans running inside the machine. (approx. 3 seconds)

GREEN CIRCULAR BUTTON LOCATION

4. Your system will start up.

5. Wait a few minutes until your system displays the login screen on your monitor.

LOGIN SCREEN

When setting up the virtual equipment, the user must set the welding parameters (e.g. wire feed speed for VR GMAW) within the ranges set in the tolerance editor. The system ships with Lincoln default tolerances. Lincoln default tolerances can be reviewed in the tolerance editor, or refer to the Default Weld Process Settings Chart (if using the default settings) located in this manual. The WPS's are also available on www.VRTEX360.com. However, users can set and use their own tolerances for teaching beginner welders. The tolerances also determine how the user is scored on such parameters as work angle, travel angle, travel speed, position, and contact tip to work distance or arc length.

Software will step the user through the following setup screens:

- Login
- Joint configuration selection
- Process selection
- Stand set up
- Environment
- Gas set up
- Weld machine settings
- Instructor's view
- Welder's view
- LASER (Live Action Student Evaluation Report)

The key provided with the system allows the user to access additional information and set-up pages.

- Weldometer™
- Tolerance Editor
- Options
- Update

Login Screen:

Overview

This page allows the user to:

- **Enter Username**
- **Select Language Preference**
- **Select Imperial or Metric Units**
- **Shutdown System**
- **Continue to the next Setup Screen**

1. On Screen Keyboard

The user enters their name by using the joystick and red select button on the VR weld machine. The joystick allows the user to navigate the keyboard graphic to highlight letters. Pressing the red select button enters the letter highlighted into the enter name box as indicated. The virtual keyboard starts with shift enabled, so the first letter is automatically capitalized. The user can select shift or lock (equivalent to caps lock on a standard keyboard) at any time. If the user makes a mistake, they can select the back arrow to delete the last character entered. Once the user enters their name, they should press the green panel button to continue.

Return to Section TOC
Return to Master TOC

2. Language

Selecting the yellow language menu button brings up the list of languages the software supports. Use the joystick to highlight the desired language. Press the red select button to accept. Press the yellow button again to exit the language menu. The system stores the language selection and will automatically start up in the same language the next time.

3. Measurement Units

The blue unit menu button brings up the measurement system. Use the joystick to highlight the desired unit of measurement. Press the red select button to accept. Press the blue again to exit the measurement unit menu. Selecting **Metric** or **Imperial** converts the user interface into the corresponding measurement system. The system stores the measurement selection, so it will automatically start up in the same unit of measurement the next time. The system uses the units shown in the table below.

	Imperial		Metric	
	Abbreviation	**Detail**	**Abbreviation**	**Detail**
Coupon thickness	in	inches	mm	millimeters
Gas flow rate	CFH	cubic feet per hour	LPM	liters per minute
Wire feed speed	IPM	inches per minute	MPM	meters per minute
Weldometer ™ - Base metal	lbs	pounds	kg	kilograms
Weldometer ™ - Gas	CF	cubic feet	L	liters
Weldometer ™ - Consumables	lbs	pounds	kg	kilograms

4. Menu

The red menu button allows the student to shut down the system. If the user selects shutdown, a submenu appears asking the user if they are sure that they want to shut down the system. This prompt prevents the user from accidentally shutting down the system. If the user selects “Yes”, the VRTEX™ 360 will shut down.

Return to Section TOC
Return to Master TOC

Joint Configuration Selection Screen:

Overview

The user selects which joint configuration they want to virtually weld. First, the user selects the joint and position. Using the joystick and the red select button, the user can highlight and select the joint type and position in which to weld. A rotating view of the highlighted coupon shows in the upper area. For some configurations, the user will be given the choice of material thicknesses to choose from. The user selects material thickness by using the joystick and red select button. See table below for supported joint configurations.

JOINT CONFIGURATION SELECTION SCREEN

Menu

Selecting **Logout** brings the user to the login screen, with the user's name removed.

Back

Selecting **Back** takes the user back to the previous screen.

JOINT CONFIGURATION CHART - MILD STEEL

				GMAW				SMAW		FCAW	
	Position	Thickness (in)	Thickness (mm)	Short Arc	Axial Spray	Pulse	STT	E7018	E6010	Gas Shielded	Self Shielded
Plate	Flat	1/4	6	X	X			X	X	X	X
	2F	1/8	3	X							
		1/4	6	X							
		3/8	10		X			X	X	X	X
	3F UP	1/4	6	X							
		3/8	10					X	X	X	X
	3F DOWN	1/8	3	X							
	4F	1/4	6	X							
		3/8	10					X	X	X	X
	1G	3/8	10	X	X			X	X	X	X
	2G	3/8	10	X		X		X	X	X	X
	3G	3/8	10	X		X		X	X	X	X
	4G	3/8	10	X				X	X	X	
Pipe	2G	2" XXS	50					X			
		6" Sch 40	150			X	X	X	X	X	
	5G	2" XXS	50					X			
		6" Sch 40	150			X	X	X	X	X	
	6G	2" XXS	50					X			
		6" Sch 40	150			X	X	X	X	X	

Return to Section TOC
Return to Master TOC

Process Selection Screen:

Overview

This screen allows the user to select the welding processes. To change among VR GMAW, VR FCAW, and VR SMAW, the user moves the process switch on the front of the weld machine. See the joint configuration chart for available processes. If a process is not supported for the selected material/thickness, it is greyed out on this screen and cannot be selected. To choose among different sub-processes, use the joystick and red select button or green continue button.

At the top of the screen, the user can see the coupon position and thickness selected. As the user continues to set up the simulation, additional information will be added to the right of this readout, so that the user can reference what has previously been selected.

PROCESS SELECTION SCREEN

Menu

Selecting **Logout** brings the user back to the login screen, with the user's name removed.

Change Coupon Type

Selecting **Change Coupon Type** goes back to the configuration selection screen.

Back

Selecting **Back** takes the user to the previous screen.

Stand Set-Up Screen:

Overview

The correct VR stand information must be put into the software for the VRTEX™ to operate properly in all virtual welding applications.

STAND SET-UP SCREEN

Coupon Insertion

Insert one of the VR coupons into the desired position in the physical VR stand. Make sure the coupon is seated into the track and then lock the coupon in place by pushing in the knob at the end of the arm. To release, pull the knob into the unlocked position and remove the coupon. When the system is in use, the coupon should always be locked in place to assure system accuracy.

VR COUPON (UNLOCKED POSITION)

Return to Section TOC
Return to Master TOC

Table/Arm Rotation

Move the physical VR table and arm to the desired location for the position and joint configuration selected. To raise or lower the arm or table, hold the arm/table in place and pull out the pin in the pole supporting it. Replace the pin in the hole that supports the arm/table at the proper height and rest the arm/table on the pin. If the table is not needed, swing the table to the left and out of the way. The arm can also be rotated to the left (A), center (B) or right (C) of the table.

SWING ARM ROTATION

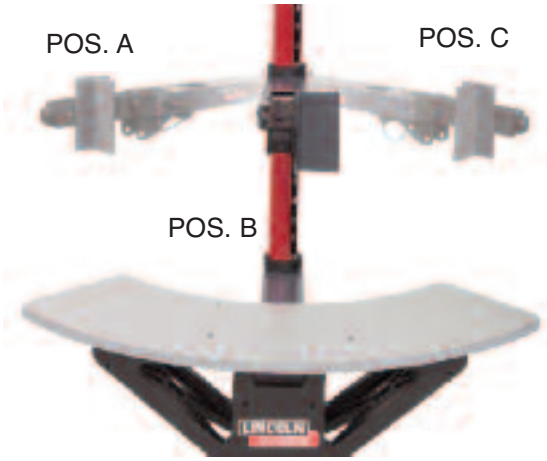

TABLE ROTATION

Pin Positions

When the physical stand is in the desired position, proceed with the following: Use the joystick and red select button to enter the numbers that appear next to the pin positions for the table and arm height, into the stand setup screen. The image on the right side of the stand setup screen moves to match the selections entered on the left. If the table is in the “away” position, enter a table height value of 0. Next, enter the arm rotation position A (left), B (center), C (right). The arm position letter aligns with the vertical pin number sticker. An arm height of 18 and and arm rotation of A is shown in the picture below.

PIN POSITIONS 18 A

Note: If the table height indicator in the software cannot be moved to the pin height indicated on the post, move the arm height indicator in the software to a higher position and try again. See Troubleshooting Guide if necessary.

Return to Section TOC
Return to Master TOC

Indicate the coupon orientation used on the physical stand in the coupon rotation area of the stand setup screen. The red arrow indicates which side of the coupon that the weld will be made. For pipe configurations, the coupon rotation is replaced with arm angle. The arm angle can be adjusted by removing the pin at the end of the arm, rotating the arm to 45 or 90 degrees from its original location, and reinserting the pin. This is only used to accommodate 2G, 5G & 6G pipe welding.

STAND SET-UP SCREEN (PIPE)

The physical stand should match the stand image when these selections are completed. To continue, press the green continue button. The stand setup verification screen will be displayed. This screen serves as a reminder to make sure VR stand components match the screen. When verified, press the green continue button again.

STAND SET-UP SCREEN OVERLAY

Back

Selecting **Back** takes the user to the previous screen.

Environment Screen:

Overview

The VRTEX™ 360 comes pre-configured with a number of different virtual welding environments. To select an environment, the user moves the joystick left or right and then presses the red select button or green continue button to choose the environment.

ENVIRONMENT SCREEN

Menu

Selecting **Logout** takes the user back to the login screen, with the user's name removed.

Back

Selecting **Back** takes the user to the previous screen.

Gas Set-Up Screen:

Overview

On this screen, the user selects the gas mixture and gas flow rate. The user must enter the correct gas mixture and flow rate according to the tolerance editor. If the user does not enter acceptable values, they will be notified on a later screen and may have to go back and change their selection on this screen.

To select the gas mixture, use the joystick and the red select button. The available gas mixtures are shown on the gas set-up screen below.

To select the gas flow rate, use the joystick. Press the red select button or green continue button to proceed.

GAS SET-UP SCREEN

Menu

Selecting **Logout** takes the user back to the login screen, with the user's name removed.

Back

Selecting **Back** takes the user to the previous screen.

Return to Section TOC
Return to Master TOC

Weld Machine Settings Screen:

Overview

The user must enter the proper welding procedure and process settings, including wire feed speed, amperage, voltage, and polarity, where applicable. As in the gas setup screen, the user must enter values within the acceptable range as governed by the tolerance editor. If not, they will be notified when the green check settings button is pressed by the incorrect weld setting screen.

The user changes the wire feed speed or amperage by rotating the wire feed speed/amperage dial. The display above the dial indicates the setting.

The user changes the voltage by rotating the voltage dial. The display above the dial indicates the setting. Some processes may not allow the user to pre-set the voltage, in which case the display will be blank.

WELD MACHINE SETTINGS SCREEN

Polarity Selector

Change the polarity by rotating the polarity selector switch. The user can select the following:

- AC
- DC+
- DC-

If default tolerances are being used, refer to the *Default Weld Process Settings* included in this manual.

Once the user has set the welding parameters, they should press the green check settings button. If the user has entered any settings outside the acceptable range specified by the settings in the tolerance editor, the incorrect weld setting screen will appear. The user will then have to change any settings that are not correct. If the settings are correct and the green check settings button is pressed, the selected environment screen will appear on the monitor and in the helmet's stereo visor. The user will then be able to start virtual welding.

THE INCORRECT WELD SETTINGS SCREEN

Menu

Selecting **Logout** brings the user back to the login screen, with the user's name removed.

Back

Pressing **Back** goes back to the previous screen.

Virtual Welding Overview

While a user is welding, observers can see the Welder's view, LASER screen, or Instructor's view displayed on the monitor. The Welder's view shows the helmets point of view. The LASER screen displays a real time graph of the weld being made and gives a score when the user selects "end pass". The Instructor's view allows another user to zoom in/out and rotate the coupon to view the weldment from different angles in real time.

Return to Section TOC
Return to Master TOC

Upper Overlays

The welding technique set in the tolerance editor and other process details are displayed on the upper right portion of the screen.

Push Buttons

Menu

Selecting **Logout** brings the user back to the login screen, with the user's name removed.

Action Button

The orange action menu button has the following options:

- Clean
- Trim
- Quench
- New Stick

These options are only available when applicable to the welding process.

Clean removes the weld slag. **Trim** cuts back the VR GMAW or VR FCAW wire. **Quench** simulates quickly cooling the metal. **New Stick** extends the rod stick out to a fixed length on the VR SMAW device to simulate replacing the consumed rod.

Visual Cues

The yellow visual cues menu button has the following options:

- "Cheater" Lens – Off 1.25X, 1.5X, 1.75X, 2X
- Travel Speed Visual Cue
- CTWD (Contact To Work Distance) Visual Cue
- Arc Length Visual Cue
- Travel/Work Angles Visual Cue

Visual cues are aids to help users learn faster. The travel speed, CTWD, arc length, and travel/work angle cues indicate whether the user is within the tolerances set in the tolerances editor. Generally, these cues are color coded as well as symbolic. When cues are red, they indicate being out of tolerance. Yellow cues indicate close to tolerance, but not optimal. Green cues indicate being within tolerance and close to optimal.

The **"Cheater" Lens** magnifies the image as seen by the user in the helmet and in the welder's view. The user can toggle between 1.25X, 1.5X, 1.75X, 2X select their option with the red select button.

Travel Speed turns on the travel speed visual cue. This cue is located on the side of the VR GMAW/FCAW Gun or VR SMAW device. This cue uses the color coding position to indicate travel speed.

Note: The goal is to get the arrow pointing up while keeping it green.

TRAVEL SPEED VISUAL CUE

The **CTWD** (Contact To Work Distance) cue is only available for processes using the VR GMAW and VR FCAW gun. This cue uses color and position to indicate proper CTWD. The goal is to get the tip of the green arrow on the line of the "H" bar and keep the arrow color green.

Return to Section TOC
Return to Master TOC

CTWD (Contact To Work Distance)

The **Arc Length** cue is similar to the CTWD cue but represents arc length distance for the VR SMAW process. The goal is to get the tip of the arrow on the line and keep the arrow color Green.

The **Travel/Work Angles** can be used with the SMAW, GMAW or FCAW processes. The goal of this cue is to center the circle in the cross hair and keep the color green.

TRAVEL/WORK ANGLE

New Coupon

Pressing the blue new coupon menu button instantly replaces the current coupon with a fresh, unwelded coupon. Note that this is a quick way to start over on the same configuration and process but that it will remove all passes from the coupon and the graphs on the LASER screen.

White Screen Select Arrows

Used to rotate through the LASER screen, instructor's view and welder's view.

Welder's View screen

Overview

This screen shows the virtual view as seen by the user wearing the helmet.

Instructor's View screen

Overview

This screen shows the coupon and virtual weld in real time. An observer can rotate and/or zoom in or out on the coupon in real time. This view also shows the VR GMAW/FCAW gun or VR SMAW device being used. Move the joystick to rotate the coupon. Press the red select button to toggle the joystick from rotate to zoom.

NOTE: Changing views on the monitor does not change the user's view in the helmet.

INSTRUCTORS VIEW (POOR WELD)

Return to Section TOC
Return to Master TOC

LASER SCREEN
(Live Action Student Evaluation Report)

Overview
This screen summarizes the students welding performance. Detailed information about the students welding technique for each pass are displayed on this screen.

LASER SCREEN (GOOD WELD)

LASER SCREEN (HORIZONTAL WELDING) NO WELD

LASER SCREEN (VERTICAL WELDING) NO WELD

LASER SCREEN (GRAPH, DEFECTS, DISCONTINUITIES, ETC.)

Technique Parameters
The upper left area of the screen shows the technique parameters being tracked. The graph of these parameters is located to the right. When the user welds, each parameter is graphed. The technique parameter lines are color coded. For example, “position” is written in the blue box and indicated by the blue line. The left side of the graph represents the left side of the coupon, and the right side represents the right side of the coupon. For vertical welds, the graph is rotated so that it is vertical, with the bottom representing the bottom of the coupon and the top representing the top of the coupon. The graph also shows how close the parameter was to the ideal value. The ideal value is indicated by the red line located in the center of the graph. This value is determined by the tolerance editor settings. The upper and lower white lines represent the acceptable maximum and minimum values that the parameter should be within. These values are also determined by the tolerance editor setting. Anything above the top white line or below the bottom white line is out of tolerance. The closer the user is to the ideal line, the better the weld.

Return to Section TOC
Return to Master TOC

Each parameter can be toggled on or off of the graph by highlighting the parameter with the joystick and pressing the red select button. Whipping and weaving parameters are graphed when the user uses these welding techniques. The following technique parameters are used in the following situations:

Parameter	Stringer		Whip	Weave	
	GMAW or FCAW	SMAW	SMAW 6010 Only	GMAW or FCAW	SMAW
Position	X	X	X	X	X
CTWD	X			X	
Arc Length		X	X		X
Work Angle	X	X	X	X	X
Travel Angle	X	X	X	X	X
Travel Speed	X	X			
Dime Spacing			X		
Whip Time			X		
Puddle Time			X		
Width of Weave				X	X
Weave Timing				X	X
Weave Spacing				X	X

Position is the user's ideal weld root location. This location can change with each pass. When weaving, the ideal location is considered the centerline of the weave.

Contact tip to work distance (**CTWD**) (for VR GMAW and VR FCAW) and arc length (for VR SMAW) are the distances from the tip of the VR GMAW/FCAW gun or VR SMAW device to a plane going through the ideal position location.

Return to Section TOC
Return to Master TOC

Work Angle is the angle between the electrode and workpiece as seen in the work angle picture.

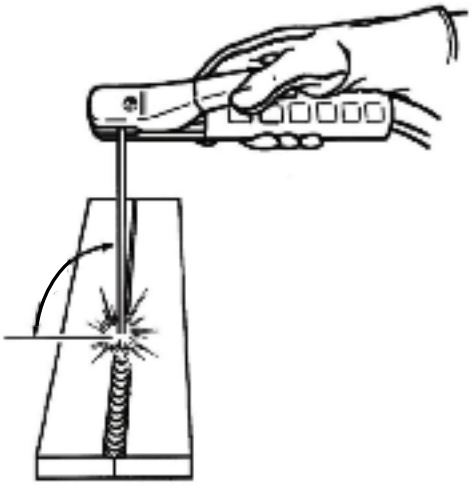

WORK ANGLE

Travel Angle is the angle between the electrode and the workpiece in the direction of travel. The upper right area of the screen displays if the user should be pushing or dragging. If the user pushes when they should be dragging, they will not receive maximum points. For pipe welding, this is the angle between the electrode and the tangent of the pipe at that point.

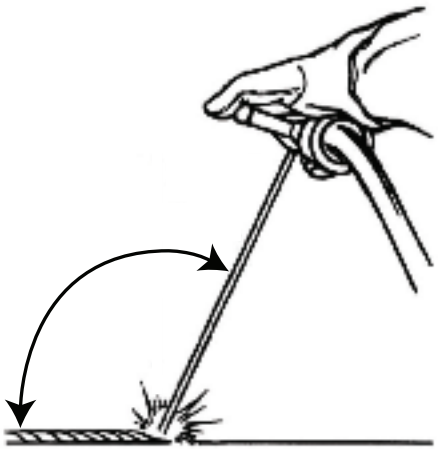

TRAVEL ANGLE

Return to Section TOC
Return to Master TOC

Travel Speed is how fast the electrode is traveling in respect to the workpiece.

Dime Spacing is the distance from one solidified weld puddle to the next. (whip technique only)

Whip Time is the time the user is in the whipping motion, or not dwelling in the weld puddle. (whip technique only)

Dwell Time is the time the user is dwelling, or keeping the VR Stick electrode in the virtual puddle. (whip technique only)

Width of Weave is the side-to-side distance of where the VR GMAW/FCAW gun or VR SMAW device was aimed when completing one weave cycle in a series that make up a weld.

Weave Timing is the time taken to complete one side to side weaving motion.

Weave Spacing is the distance in the overall direction of travel between one weave cycle in a series that make up a weld.

Pass number

The pass number is displayed on the left center of the screen. To change the pass being viewed, use the joystick to highlight the pass number and then joystick left or right to change the pass number. For pipe, the information is displayed in a similar manner on a 2D screen as though the pipe is unraveled and put on a flat surface. The user can choose between viewing the whole pipe or one of the four quadrants of the pipe. Use the joystick to highlight the pipe section desired.

Travel Direction

The travel direction is located on the right side in the middle of the screen. When the user first starts to weld, a travel direction is sensed by the system and an arrow indicating the direction is displayed. For visual cues, the system assumes these directions. The visual cues will automatically adapt to the travel direction used when the arc is struck.

Bead Render

An image of the completed pass appears in the middle of the screen.

Discontinuity Indicator

The lower left side of the screen list potential discontinuities. When a student uses incorrect welding techniques, this causes specific weld discontinuities. A line is drawn at the location indicating these discontinuities. For example, too long an arc length will cause porosity.

Potential discontinuities include:

- Incomplete Fusion/Penetration
- Slag Inclusion
- Porosity
- Undercut
- Poor Bead Placement
- Wrong Weld Size
- Convex/Excessive Reinforcement
- Concave/Underfill
- Excess Spatter
- Melt Through/Blow Through

Return to Section TOC
Return to Master TOC

End Pass

When the user presses the green “End Pass” menu button, the pass is scored, a snapshot of the weld is taken, and the percentages of the weld containing discontinuities are calculated. **If the user has inserted a USB device, pressing “End Pass” also automatically saves a student report to the USB memory device at the front of the weld machine.** Allow 10 seconds after pressing the “End Pass” button to allow time for the file to be saved. Student reports are not saved internally on the VRTEX™ 360. If the file is not saved on the USB device at the time of the weld, and another weld is made, the previous weld data will be lost.

Score

On the upper right of the screen, a score for each parameter is calculated. The closer each parameter is to the ideal value, the higher the score will be (out of 100). The total score at the bottom of the scoring section is calculated as an average of each parameter. To achieve the maximum score, the weld must be made on the entire length of the coupon.

Student Report

The student report is a PDF file that captures the graph, discontinuities, bead render, score and other information about the weld. This PDF can be printed or archived from another computer to track student progress.

Peak and Background Current

These welding parameters are shown on the LASER screen when the student is using the STT welding process. These settings cannot be modified but are indicated on the system to allow the student to become familiar with the terms.

Instructor Mode

Overview

The Instructor Mode give users the option of viewing the Weldometer™ using the tolerance editor and setting other preferences. In order to access instructor mode, the user must first go back to the login screen. This can be done on most screens by pressing menu, logout, and selecting yes. Then the user must place the key into the turn key slot at the front of the weld machine and rotate the key 90 degrees to the right. Turning the key switch again brings the system out of the instructor mode.

Instructor mode includes the following:

- Options
- Update
- Weldometer™
- Tolerances

INSTRUCTOR MODE

Options

The options screen in the instructor mode allows the user to change the volume of the user interface noises and welding sounds. Move the joystick left and right and then hit the select button to choose the volume. A volume of 0 will mute the sound, while a volume of 10 is the loudest.

Update

Overview

The update screen in the instructor mode allows the user to update their software or to update specific configuration files from the USB memory device the front of the weld machine. Clicking on this brings up two options:

Update Software
Update Configuration File

Software

Selecting this option loads a newer version of the software if one is available on the USB in the front of the machine. Updating to a different version may shut down or restart the system.

After updating, the system may need to be shut down and restarted for changes to take affect.

Configuration File

Selecting this option loads any configuration changes from the USB in the front of the machine. This is used for part replacement.

Return to Section TOC
Return to Master TOC

Weldometer™

Overview

The Weldometer™ tracks virtual consumables, base material and gas usage. This information can be used to track materials and cost savings created by the use of virtual welding training. The Weldometer™ tracks material usage and arc time over a “trip” (since last reset) and over the VR systems lifetime.

Arc Time keeps track of the amount of time (hours:min:seconds) students have spent with a virtual arc struck with each process.

Base Metal tracks how many virtual coupons have been used and their cumulative weight. Note that plate 3/8” includes groove joints as well as tee joints, while plate 1/4" includes both tee joints and practice plates.

Gas tracks how much virtual gas was used.

Consumables tracks the cumulative weight of each type of virtual consumable used. It also displays how many virtual SMAW electrodes are used.

At the bottom of the screen, the **Simulated Welder Time** keeps track of how long the unit has been on (time in hours:minutes:seconds).

WELDOMETER™

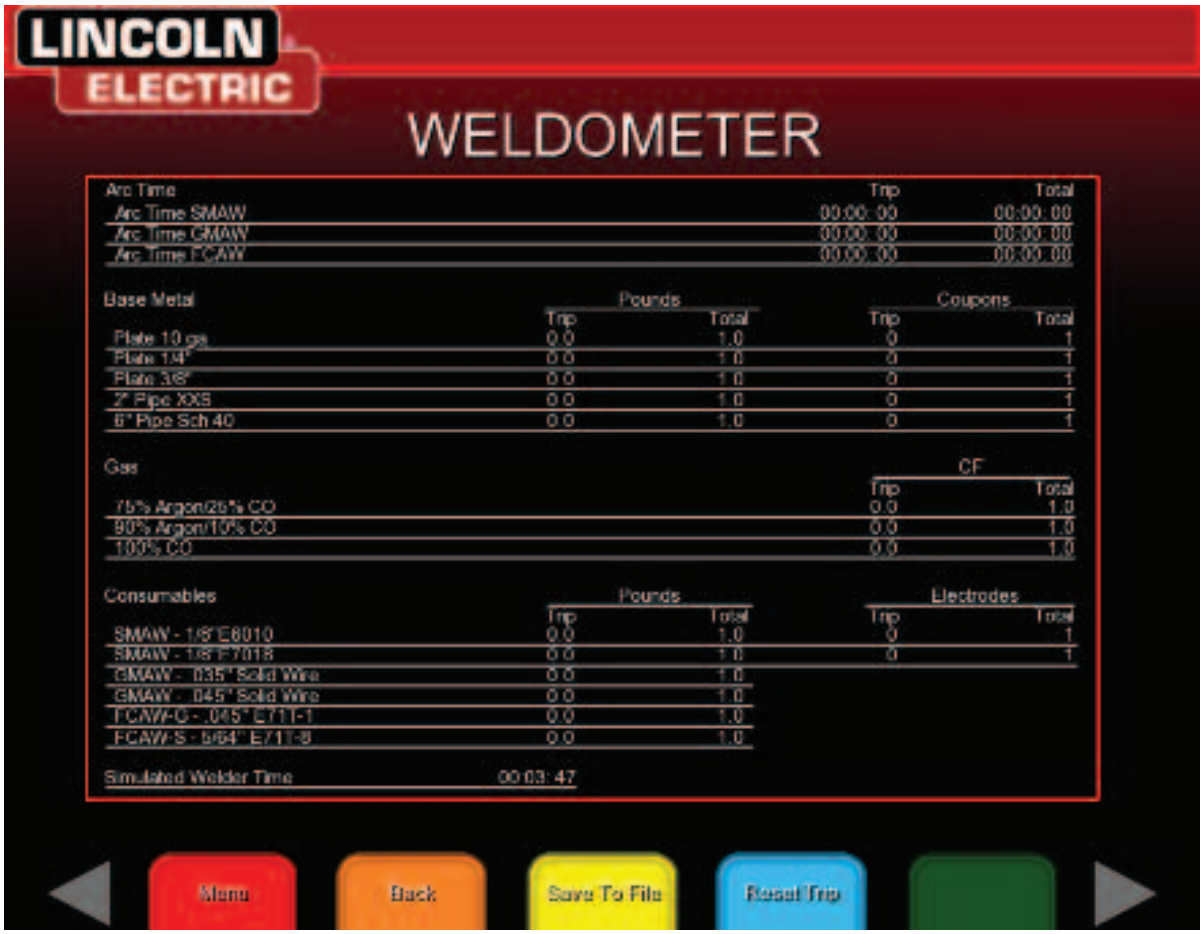

Return to Section TOC
Return to Master TOC

Reset Trip

Pressing **Reset Trip** zeroes out all items in the trip column. This allows an instructor to track VR material savings over a certain time period.

Save to File

If a USB memory device is in the front of the unit, selecting “save to file” saves a file with all of the current Weldometer™ information. Once the file has saved, the user can take the USB to a computer or printer to print, email, copy, store or view the file.

Back

Pressing **Back** takes the user to the previous screen.

Tolerance Editor

Overview

The tolerance editor allows users to modify the system default settings to fit their curriculum.

The VRTEX™ 360 ships with Lincoln “default” welding parameters pre-installed. These default parameters can be modified by the instructor to reflect a specific welding application or technique. The welding parameters that can be modified include:

- WFS range
- Voltage range
- Amperage range
- Gas mixture
- Gas flow rate

The technique parameters ideal range values can also be modified:

- Position
- CTWD/Arc length
- Work angle
- Travel angle
- Travel Speed

TOLERANCES

⚠ CAUTION

Changing the settings in the tolerance editor will dramatically affect how the system runs. Take care in changing the settings of the tolerance editor as not to reflect unrealistic welding situations.

Return to Section TOC
Return to Master TOC

Choose Tolerance Set-up

This displays the list of all tolerance settings currently stored on the unit. All units ship with default settings. If the user presses the red select button while the file name is highlighted, it becomes the currently used tolerance setting. This affects the visual cues, graphs, discontinuities and score.

Choose Tolerance to Load

This displays the list of all tolerance sets currently stored on the USB device. Files can be transferred to and from a VRTEX™ 360 with a USB memory device.

Back

Pressing back returns the system to the login screen.

Edit

This menu button affects the file currently being shown in the choose tolerance setup window. This menu has the following options:

- Create New
- Save to File
- Copy
- Delete
- Rename

Pressing **Create New** creates a new file on the unit. The file starts with the default settings. Pressing this button takes the user to a keyboard screen so that a new file name can be entered.

Pressing **Save to File** saves the current file to a USB memory device if inserted in the front of the machine.

Pressing **Copy** makes a copy of the file currently being shown on the choose tolerance setup window. The copy is identified with the same name plus an incremented number after it.

Pressing **Delete** brings up an “are you sure” dialogue. Selecting yes deletes the file currently shown. The user can cancel out by pressing no or pressing the back button.

Pressing **Rename** brings the user to a keyboard screen where the name of the current file can be changed.

USB Edit

This menu relates only to the files on the USB memory device. If there is a file name currently listed in the choose tolerance to load box, pressing the options on the menu will take action on that file. This menu has the following options:

- Copy to List
- Delete
- Rename
- Load from USB

Pressing **Copy to List** copies the file currently being shown on the choose tolerance to load box and saves it to the VRTEX™ 360.

Pressing **Delete** brings up an “are you sure” dialogue. Selecting yes deletes the file currently being shown on the choose tolerance to load. This deletes the file from the USB memory device. The user can also cancel out by pressing no or pressing the back button.

Pressing **Rename** brings the user to a keyboard screen where the name of the current file can be changed.

Pressing **Load** loads the names of the files currently on the USB memory device. The names show up in the choose tolerance to load box. The user will need to select this in order to see what is on their USB memory device.

Tolerances Keyboard Screen

Overview

Allows the user to name or rename tolerance files.

TOLERANCES (KEYBOARD SCREEN)

Return to Section TOC
Return to Master TOC

TOLERANCES SELECTED (LINCOLN DEFAULTS)

Back
Pressing back returns the user to the previous page screen.

Continue
Pressing continue goes to the tolerance configuration selection screen, unless the user was renaming a file, in which case it goes back to the previous page.

Tolerances Joint Configuration Selection Screen

Overview
The user selects which configuration to modify.

TOLERANCE CONFIGURATION SELECTION

Menu

Selecting **Logout** and then yes in the submenu takes the user back to the Login screen.

Selecting **Change Process** brings the user back to the tolerances process selection screen.

Back
Pressing **Back** goes back to the pervious screen.

Continue
Pressing **Continue** goes to the tolerance process selection screen.

Tolerances Process Selection Screen

Overview
The user selects which process to modify.

TOLERANCES PROCESS SELECTION SCREEN

Menu

Selecting **Logout** and then yes in the submenu brings the user back to the login screen in welding mode.

Selecting **Change Coupon Type** takes the user back to the tolerances configuration selection screen.

Back
Pressing **Back** goes back to the tolerance configuration selection screen.

Continue
Pressing **Continue** goes to the tolerance equipment settings screen.

Return to Section TOC
Return to Master TOC

Tolerances Value Modifying

Overview

The user can modify the tolerance values. This is done by: 1) Use the joystick to highlight the equipment setting or parameter to change. 2) Press the red select button. 3) Use the joystick to change the value. Pressing the green set tolerances button will save the changes.

The following screens are used to modify tolerances:

- Tolerances Equipment Settings screen
- Tolerances Gas screen
- Tolerances Welding Technique Parameters screen
- Tolerances Pattern and Aim screen
- Tolerances Whip and Travel Speed screen
- Tolerances Weave screen

Next & Previous

The arrow buttons are used to cycle through the tolerance editor screens.

The configuration and process selected are shown at the top of the screen.

In the upper right of the screen is the name of the tolerance set being modified.

Ideal values represent the ideal weld technique parameters. If the user welds using the technique listed as ideal, they will get the best score. The ideal values are represented by the red line on the LASER screen. Changing the +/- changes the acceptable tolerance indicated by the white lines on the LASER screen. Any welding technique used within that +/- range is acceptable but will be scored lower the further it is from the ideal value. As an example, a work angle with an ideal of 45 degrees and a +/-1 of 10 degrees means that the user can use a work angle between 35 and 55 degrees and create an acceptable weld.

Settings that are non-applicable to the process selected are greyed out and cannot be changed.

Menu

This is the same as the tolerance configuration selection screen.

Back

Pressing back goes to the previous screen without saving changes.

Prev Pass

Pressing this changes the pass being modified. If this is the first pass, this option is not available. The pass number currently being modified is shown in the upper right of the screen.

Next Pass

Changes the pass being modified to the next pass in the series. If this is the last pass, this option will not be available.

Tolerances Equipment Settings Screen

TOLERANCES EQUIPMENT SETTINGS SCREEN

Overview

This screen allows for the modification of the following welding parameters:

- Wire Feed Speed
- Amperage
- Voltage
- Polarity

Tolerances Gas screen

Overview

This screen allows for the modification of:

- Gas Mixture Selected
- Gas Flow Rate

TOLERANCES GAS SCREEN

Return to Section TOC
Return to Master TOC

Tolerances Welding Technique Parameters Screen

Overview

This screen allow for the modification of:

- CTWD/Arc Length
- Work Angle
- Travel Angle

TOLERANCES WELDING TECHNIQUE PARAMETERS

Note: The travel angle for drag welding techniques should always be less than 90 degrees. The travel angle for pushing technique should always be greater than 90 degrees.

Tolerances Pattern and Aim Screen

Overview

This screen allows the user to change the type of pattern being used (stringer, box weave, straight weave, whip, triangle weave) and the position of the root of the weld. The X and Y values change the location of where the weld bead should be placed. This affects the position parameter on the LASER screen. The +/- determines how far off from the ideal position the student can place the electrode before it results in a misplaced weld.

PATTERN & AIM SCREEN

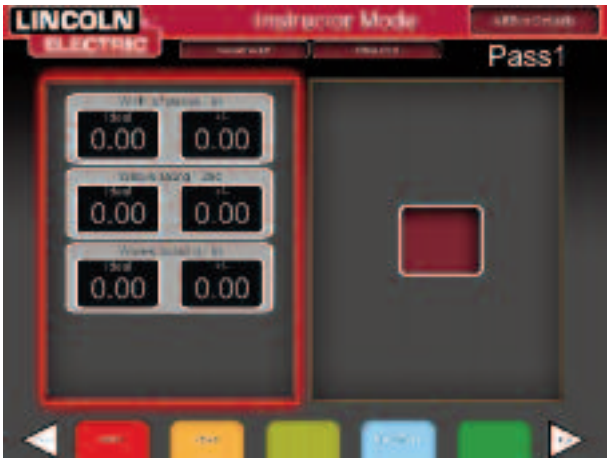

COORDINATE CHART FOR WELD PLACEMENT (POSITION)

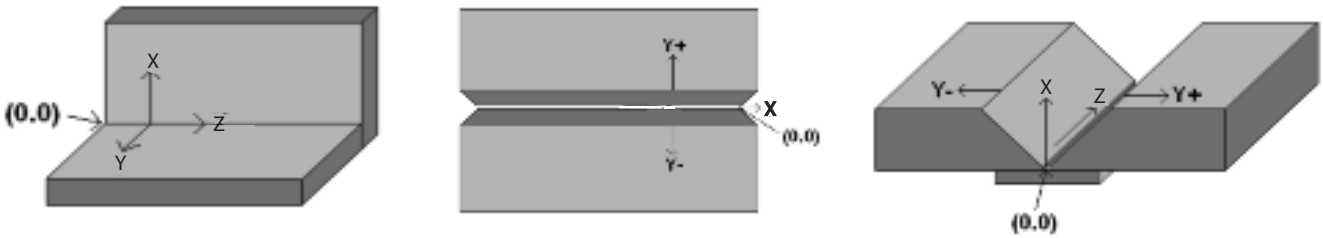

TEE PIPE GROOVE

Return to Section TOC
Return to Master TOC

Tolerances Whip and Travel Speed Screen

Overview

This screen allows for the modification of technique parameter relating to the whipping welding technique and travel speed including:

- Dime Spacing
- Whip Time
- Puddle Time
- Travel Speed

WHIP & TRAVEL SPEED SCREEN

Tolerances Weave Screen

Overview

This screen allows for the modification of weaving welding technique including:

- Width of Weave
- Weave Timing
- Weave Spacing

TOLERANCES WEAVE SCREEN

Return to Section TOC
Return to Master TOC

VRTEX 360 - Default Weld Process Settings

VR Welding Process	Consumable Type	Lincoln Brand	Gas Mixture	Gas Flow (cfh)	Position	Mat'l (in)	wfs (ipm) or amps	Voltage	Pol
SMAW	1/8" E6010	Fleetweld 5P+	NA	NA	Flat	.25"	90 (±5)	NA	DC+
SMAW	1/8" E6010	Fleetweld 5P+	NA	NA	2F, 3F up, 4F	.375"	90 (±5)	NA	DC+
SMAW	1/8" E6010	Fleetweld 5P+	NA	NA	1G, 2G, 3G up, 4G	.375"	90 (±5)	NA	DC+
SMAW	1/8" E7018	Excalibur 7018	NA	NA	Flat	.25"	125 (±5)	NA	DC+
SMAW	1/8" E7018	Excalibur 7018	NA	NA	2F, 3F up, 4F	.375"	125 (±5)	NA	DC+
SMAW	1/8" E7018	Excalibur 7018	NA	NA	1G, 2G, 3G up, 4G	.375"	125 (±5)	NA	DC+
SMAW	1/8" E6010	Fleetweld 5P+	NA	NA	2G Pipe	6"	Root: 80 (±5) Hot:100 (± 5) Fill/Cap: 80 (±5)	NA	DC+
SMAW	1/8" E6010	Fleetweld 5P+	NA	NA	5G Pipe up	6"	Root: 80 (±5) Hot:100 (± 5) Fill/Cap: 80 (±5)	NA	DC+
SMAW	1/8" E6010	Fleetweld 5P+	NA	NA	6G Pipe up	6"	Root: 80 (±5) Hot:100 (± 5) Fill/Cap: 80 (±5)	NA	DC+
SMAW	1/8" E6010 3/32" E7018	Fleetweld 5P+ Excalibur 7018	NA	NA	2G Pipe	6"	Root: 90 (±5) Hot: 100 (±5) Fill/Cap: 80 (± 5)	NA	DC+
SMAW	1/8" E6010 3/32" E7018	Fleetweld 5P+ Excalibur 7018	NA	NA	5G Pipe up	6"	Root: 90 (±5) Hot: 100 (±5) Fill/Cap: 80 (± 5)	NA	DC+
SMAW	1/8" E6010 3/32" E7018	Fleetweld 5P+ Excalibur 7018	NA	NA	6G Pipe up	6"	Root: 90 (±5) Hot: 100 (±5) Fill/Cap: 80 (± 5)	NA	DC+
SMAW	1/8" E6010 3/32" E7018	Fleetweld 5P+ Excalibur 7018	NA	NA	2G Pipe	2"	Root: 90 (±5) Hot: 100 (±5) Fill/Cap: 80 (± 5)	NA	DC+
SMAW	1/8" E6010 3/32" E7018	Fleetweld 5P+ Excalibur 7018	NA	NA	5G Pipe up	2"	Root: 90 (±5) Hot: 100 (±5) Fill/Cap: 80 (± 5)	NA	DC+
SMAW	1/8" E6010 3/32" E7018	Fleetweld 5P+ Excalibur 7018	NA	NA	6G Pipe up	2"	Root: 90 (±5) Hot: 100 (±5) Fill/Cap: 80 (± 5)	NA	DC+
SMAW	3/32" E7018	Excalibur 7018	NA	NA	2G Pipe	2"	GTAW Root: NA Fill/Cap: 80 (±5)	NA	DC+
SMAW	3/32" E7018	Excalibur 7018	NA	NA	5G Pipe up	2"	GTAW Root: NA Fill/Cap: 80 (±5)	NA	DC+
SMAW	3/32" E7018	Excalibur 7018	NA	NA	6G Pipe up	2"	GTAW Root: NA Fill/Cap: 80 (±5)	NA	DC+
GMAW - S	.035" ER70S-6	SuperArc L-56	75A/25C	15 - 35	Flat	.25"	250 (± 5)	18	DC+
GMAW - S	.035" ER70S-6	SuperArc L-56	75A/25C	15 - 35	2F, 3F down	.125"	250 (+ 5)	18	DC+
GMAW - S	.035" ER70S-6	SuperArc L-56	75A/25C	15 - 35	2F	.25"	375 (+ 5)	20	DC+
GMAW - S	.035" ER70S-6	SuperArc L-56	75A/25C	15 - 35	3F up	.25"	275 (+ 5)	18	DC+
GMAW - S	.035" ER70S-6	SuperArc L-56	75A/25C	15 - 35	4F	.25"	325 (+ 5)	19	DC+
GMAW - S	.035" ER70S-6	SuperArc L-56	75A/25C	15 - 35	1G	.375"	350 (+ 5)	20	DC+
GMAW - S	.035" ER70S-6	SuperArc L-56	75A/25C	15 - 35	2G	.375"	320 (+ 5)	19.5	DC+
GMAW - S	.035" ER70S-6	SuperArc L-56	75A/25C	15 - 35	3G up	.375"	250 (± 5)	17.9	DC+
GMAW - S	.035" ER70S-6	SuperArc L-56	75A/25C	15 - 35	4G	.375"	270 (± 5)	18	DC+
GMAW - Spray	.045" ER70S-6	SuperArc L-56	90A/10C	25-40	Flat	0.25	400 (± 5)	27.1	DC+
GMAW - Spray	.045" ER70S-6	SuperArc L-56	90A/10C	25-40	2F	.375"	375 (± 5)	26.5	DC+
GMAW - Spray	.045" ER70S-6	SuperArc L-56	90A/10C	25-40	1G	.375"	370 (± 5)	26.5	DC+
GMAW - Pulse	.045" ER70S-6	SuperArc L-56	90A/10C	25-40	2G	.375"	130 (± 5)	.95(trim)	DC+
GMAW - Pulse	.045" ER70S-6	SuperArc L-56	90A/10C	25-40	3G up	.375"	130 (± 5)	.95(trim)	DC+
GMAW - STT	.045" ER70S-6	SuperArc L-56	100C	15 - 35	2G Pipe	6"	130 - 150	NA	DC+
GMAW - Pulse	.045" ER70S-6	SuperArc L-56	90A/10C	25-40	2G Pipe		125-130	.95(trim)	
GMAW - STT	.045" ER70S-6	SuperArc L-56	100C	15 - 35	5G Pipe down	6"	130 to 150	NA	DC+
GMAW - Pulse	.045" ER70S-6	SuperArc L-56	90A/10C	25-40	5G Pipe up		125-130	.95(trim)	
GMAW - STT	.045" ER70S-6	SuperArc L-56	100C	15 - 35	6G Pipe down	6"	130 to 150	NA	DC+
GMAW - Pulse	.045" ER70S-6	SuperArc L-56	90A/10C	25-40	6G Pipe up		125-130	.95(trim)	
FCAW - G	.045" E71T-1	UC 71A85	75A/25C	25-50	Flat	.25"	275 (± 5)	25	DC+
FCAW - G	.045" E71T-1	UC 71A85	75A/25C	25-50	2F, 3F up, 4F	.375"	275 (± 5)	25	DC+
FCAW - G	.045" E71T-1	UC 71A85	75A/25C	25-50	1G, 2G, 3G up, 4G	.375"	275 (± 5)	25	DC+
GMAW - STT	.045" ER70S-6	SuperArc L-56	100C	15-35	2G Pipe	6"	130 to 150	NA	DC+
FCAW - G	.045" E71T-1	UC 71A85	75A/25C	25-50			275 (± 5)	25	
GMAW - STT	.045" ER70S-6	SuperArc L-56	100C	15-35	5G Pipe down	6"	130 to 150	NA	DC+
FCAW - G	.045" E71T-1	UC 71A85	75A/25C	25-50	5G Pipe up		275 (± 5)	25	
GMAW - STT	.045" ER70S-6	SuperArc L-56	100C	15-35	6G Pipe down	6"	130 to 150	NA	DC+
FCAW - G	.045" E71T-1	UC 71A85	75A/25C	25-50	6G Pipe up		275 (± 5)	25	
FCAW - S	5/64" E71T-8	NR- 232/233	NA	NA	Flat	.25"	140	20	DC-
FCAW - S	5/64" E71T-8	NR- 232/233	NA	NA	2F, 3F up	.375"	155	21	DC-
FCAW - S	5/64" E71T-8	NR- 232/233	NA	NA	4F	.375"	145	20	DC-
FCAW - S	5/64" E71T-8	NR- 232/233	NA	NA	1G,2G	.375"	130	21	DC-
FCAW - S	5/64" E71T-8	NR- 232/233	NA	NA	3G up	.375"	125	19.5	DC-

NOTES

B-29

Return to Section TOC
Return to Master TOC
Return to Section TOC
Return to Master TOC
Return to Section TOC
Return to Master TOC
Return to Section TOC
Return to Master TOC

TABLE OF CONTENTS - MAINTENANCE SECTION

Maintenance **D-1**

Cleaning and Maintenance D-2

Major Component Location D-3

Return to Master TOC
Return to Master TOC
Return to Master TOC
Return to Master TOC

Return to Section TOC
Return to Master TOC

CLEANING & MAINTENANCE

FMD

Taking proper care of the FMD (Face Mounted Display) is important for optimal functioning of the equipment. Occasionally, the FMD lens should be wiped with the lint free lens wipe that is provided. This can be done to remove fingerprints from the lenses. You can also use a lens cloth (e.g., from a camera shop). Paper towels or household cloths may scratch or damage the lenses and should not be used. Avoid exposing the FMD to liquids. Cleaning solutions should not be used to clean the FMD. Do not use Isopropyl alcohol or solutions containing alcohol to clean the lenses or plastic parts on the FMD. You can also use a camera pressure canister to occasionally blow out dirt.

You may want to clean the inside of the helmet occasionally. Be sure to do so without exposing the FMD to any unacceptable materials, as explained above.

The FMD should be kept in a clean and dry location out of direct sunlight. Avoid dirty or sandy environments, as these can lead to scratching of optics and damage the FMD mechanical adjustments.

Monitor

⚠ CAUTION

The monitor is not a touch screen and can be damaged by touching or poking it with any object. Use care when cleaning screen. Use only a soft dry cloth (cotton or flannel). Avoid chemicals and solvents (alcohol, benzine, acidic or alcazine solvent cleaners). Avoid granular or abrasive cleaning agents.

Return to Section TOC
Return to Master TOC

1. Case Front Assembly
2. Control Panel Assembly
3. Coupon Drawer Assembly
4. Base Assembly & Computer
5. Stand Assembly & Accessories
6. Cart Assembly
7. Covers

FIGURE D.1 - MAJOR COMPONENT LOCATION

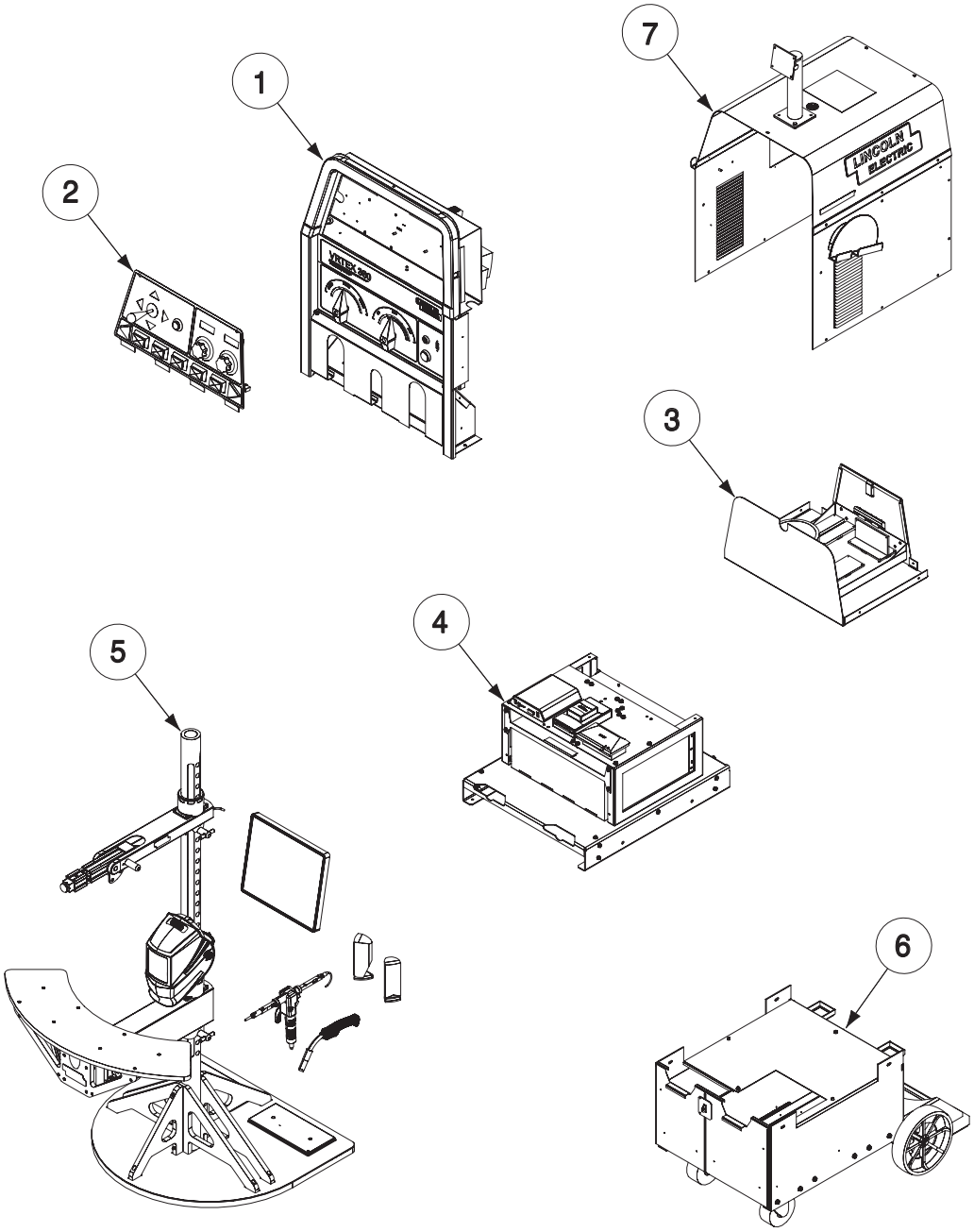

NOTES

D-4

Return to Section TOC
Return to Section TOC
Return to Section TOC
Return to Section TOC
Return to Master TOC
Return to Master TOC
Return to Master TOC
Return to Master TOC

TABLE OF CONTENTS-THEORY OF OPERATION SECTION

Theory of Operation E-1

General Description E-2

Input Power and Distribution E-3

CPU Functions, User Controls, Indicators and Video/Audio Components E-4

FMD Control Unit, Polhemus Interface Module, Welding Stand, Helmet and Relay Board E-5

FIGURE E.1 BLOCK LOGIC DIAGRAM

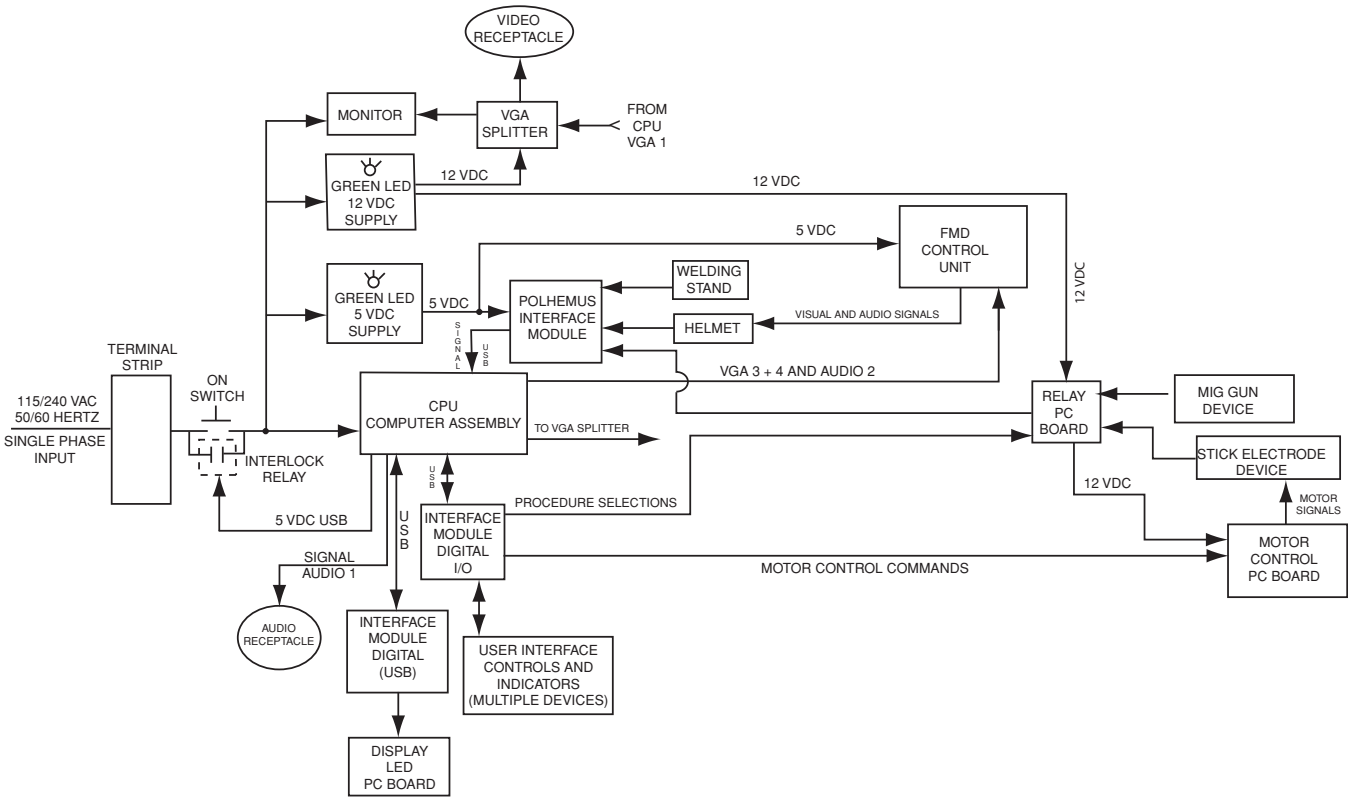

Return to Master TOC
Return to Master TOC
Return to Master TOC
Return to Master TOC

FIGURE E.2 - GENERAL DESCRIPTION

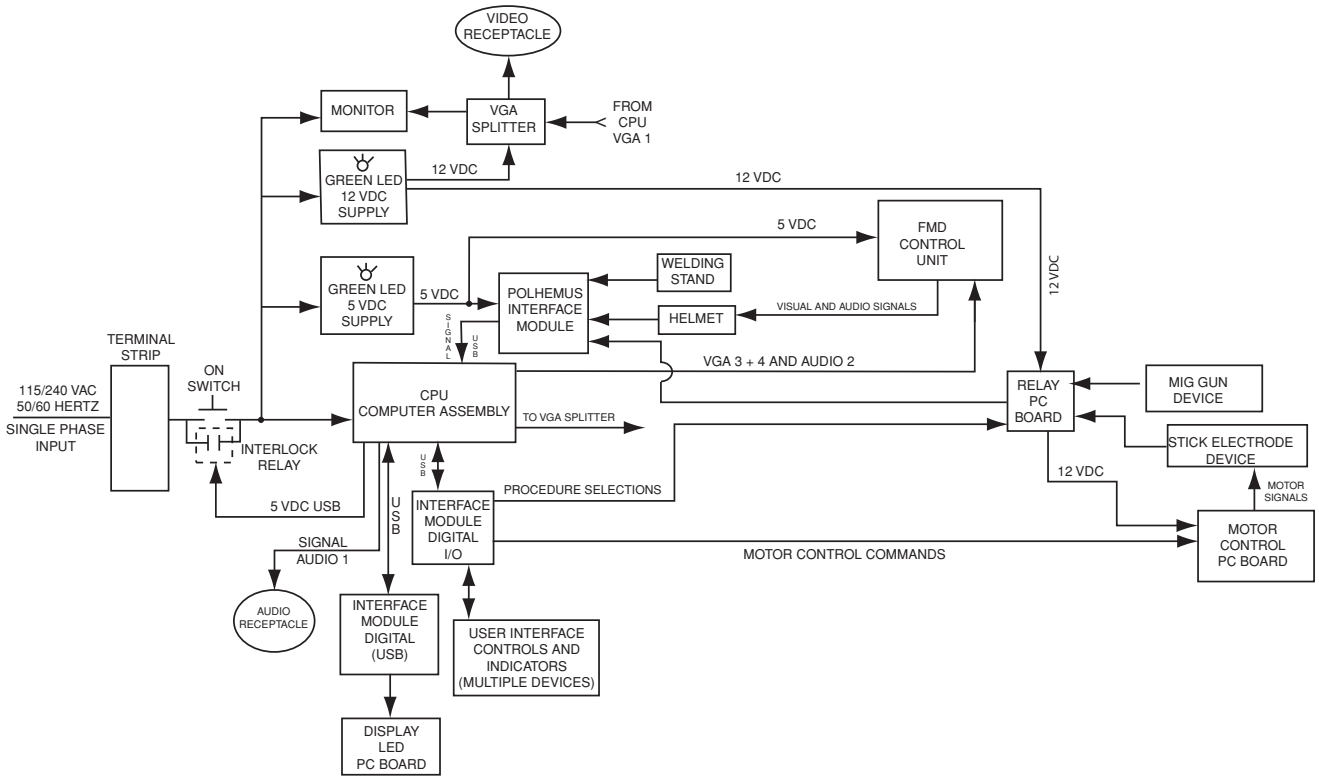

GENERAL DESCRIPTION

The Virtual Welding Training System VRTEX™ 360 is a computer controlled interactive system that, through the combination of realistic puddle simulation and arc welding sound provides the user with a realistic, hands on welding experience. This training system is capable of simulating multiple arc welding processes on a wide variety of weld joint configurations. The VRTEX™ 360 is built upon the technology of the VRSIM Simwelder and represents the next generation of Virtual Reality welding training.

NOTE: Unshaded areas of Block Logic Diagram are the subject of discussion

Return to Section TOC
Return to Master TOC

FIGURE E.3 - INPUT POWER & DISTRIBUTION

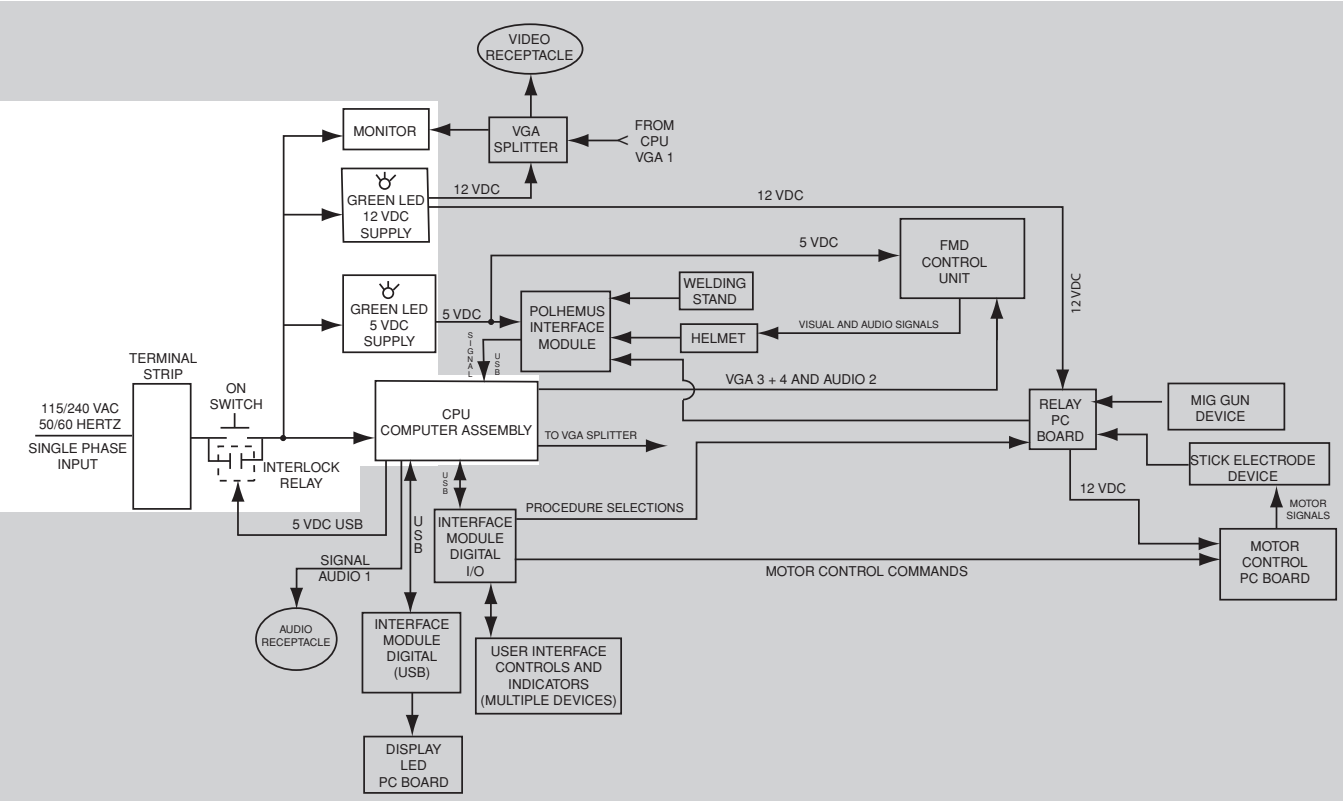

INPUT POWER & DISTRIBUTION

The single phase input power (115-240VAC) is applied through a terminal strip and a momentary switch to four discreet components. They are the computer assembly (CPU), the 5VDC supply, the 12VDC supply and the monitor. These components rectify the AC input and regulate the resultant DC voltage to operate the internal electronics of the VRTEX™ 360.

When the CPU has been energized the momentary "ON" switch is bypassed by the interlock relay. The 5VDC created by the CPU is applied, via a USB cable to the interlock relay. The independent 5VDC supply provides power to the Polhemus Interface Module, and the FMD Control Unit. The other independent 12VDC supply provides power to the VGA Splitter and via the Relay PC Board to the Motor Control Board.

NOTE: Unshaded areas of Block Logic Diagram are the subject of discussion

Return to Section TOC
Return to Master TOC

FIGURE E.4 - COMPUTER ASSEMBLY (CPU) FUNCTIONS, USER CONTROLS, INDICATORS & VIDEO/AUDIO COMPONENTS

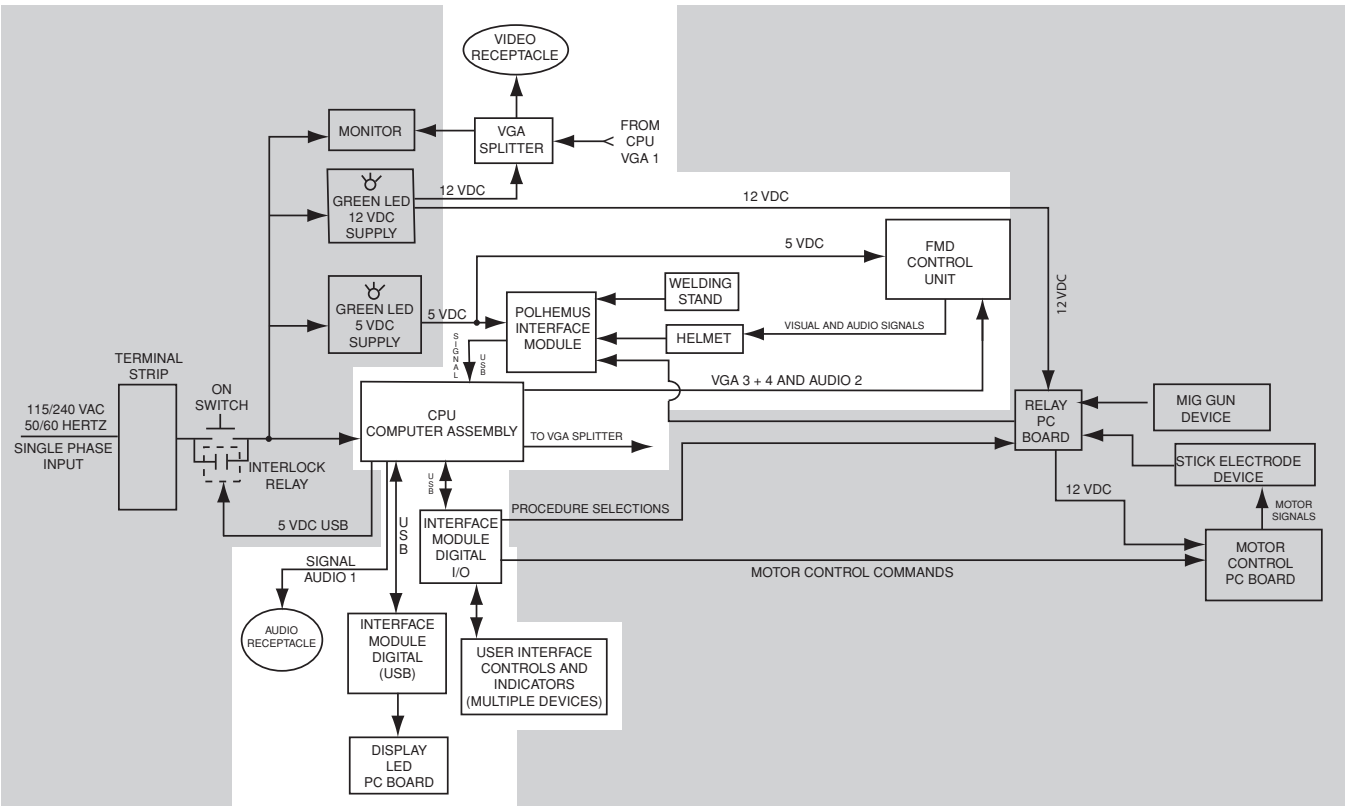

COMPUTER ASSEMBLY (CPU) FUNCTIONS, USER CONTROLS, INDICATORS & VIDEO/AUDIO COMPONENTS

Once the CPU is powered up it becomes the main information processing component of the VRTEX™ 360. The CPU receives commands from User Interface Controls via the Digital I/O Interface Module and USB connections. The CPU processes these commands and sends acceptance signals back to the User Interface Indicators and to the Digital Interface Module and Display LED PC Board.

The CPU receives real time feedback signals from the Polhemus Interface Module and compares these to the commands and procedure selections set forth from the User Interface Controls. This processed video and audio information is then sent to the Face Mounted Display (FMD) Control Unit, the Video Graphics Display Splitter (VGA) Monitor and the Video and Audio Receptacles.

NOTE: Unshaded areas of Block Logic Diagram are the subject of discussion

Return to Section TOC
Return to Master TOC

FIGURE E.5 - FMD CONTROL UNIT, POLHEMUS INTERFACE MODULE, WELDING STAND, HELMET, RELAY BOARD AND WELDING DEVICES

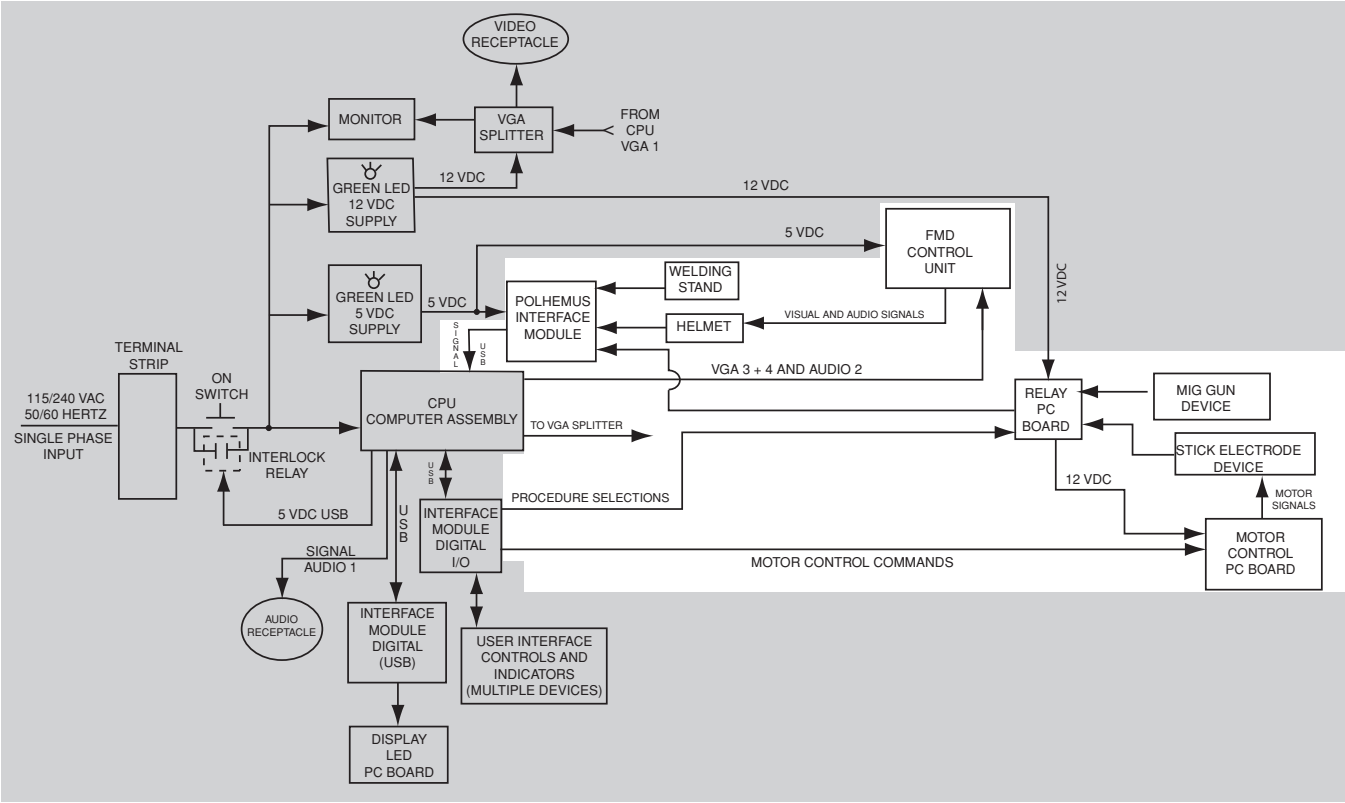

FMD CONTROL UNIT, POLHEMUS INTERFACE MODULE, WELDING STAND, HELMET, RELAY BOARD AND WELDING DEVICES

The FMD Control Unit forwards the video and audio information it receives from the CPU to the Helmet for real time user performance feedback.

The Polhemus Interface Module processes feedback signals it receives from the Welding Stand, the Helmet and the Relay PC Board and via a USB cable connection provides interactive performance information to the CPU. The Welding Devices (Mig and Stick) and the Welding Stand interact through magnetic signals.

The Relay PC Board receives user procedure selections from the Interface Digital I/O Module. The Relay PC Board then activates either the Mig Gun Device or the Stick Electrode Device and interacts with the Polhemus Interface Module to provide virtual welding feedback information to the CPU. When the Stick Electrode Device is selected the Motor Control PC Board is commanded by the Interface Digital I/O Module to retract the magnetic electrode to simulate the consumption of a stick electrode.

NOTE: Unshaded areas of Block Logic Diagram are the subject of discussion

Return to Section TOC
Return to Master TOC

NOTES

E-6

Return to Section TOC
Return to Section TOC
Return to Section TOC
Return to Section TOC
Return to Master TOC
Return to Master TOC
Return to Master TOC
Return to Master TOC

TABLE OF CONTENTS - TROUBLESHOOTING AND REPAIR

Troubleshooting and Repair **F-1**

How to Use Troubleshooting Guide F-2

PC Board Troubleshooting Procedures F-3

Troubleshooting Guide F-4/F-14

Test Procedures F-15

5 VDC Supply Test F-15

12/15 Volt Supply Test F-19

Face Mounted Display (FMD) Control Unit Test F-23

Interface Digital Module I/O Test F-27

USB Interface Module Test F-31

Polhemus Interface Module Test F-35

Removal and Replacement Procedures F-39

Monitor and Pedestal Removal and Replacement F-39

Case Cover Removal and Replacement F-43

Polhemus Module Removal and Replacement F-47

FMD Controller and Helmet Removal and Replacement F-51

Relay PC Board Removal and Replacement F-55

5 Volt Supply Removal and Replacement F-59

12/15 Volt Supply Removal and Replacement F-63

ON Button Removal and Replacement F-67

Interface Module Digital I/O Removal and Replacement F-71

USB Interface Module Removal and Replacement F-75

Display Board Removal and Replacement F-81

Motor Control Board Removal and Replacement F-85

VR SMAW (STICK) Device Removal and Replacement F-89

VR GMAW/FCAW (MIG) Device Removal and Replacement F-93

VGA Splitter Removal and Replacement F-97

Table Swing Arm Removal and Replacement F-101

CPU Removal and Replacement F-105

Retest and Repair F-110

Return to Master TOC
Return to Master TOC
Return to Master TOC
Return to Master TOC

Return to Section TOC
Return to Master TOC

HOW TO USE TROUBLESHOOTING GUIDE

⚠ WARNING

Service and Repair should only be performed by Lincoln Electric Factory Trained Personnel. Unauthorized repairs performed on this equipment may result in danger to the technician and machine operator and will invalidate your factory warranty. For your safety and to avoid Electrical Shock, please observe all safety notes and precautions detailed throughout this manual.

This Troubleshooting Guide is provided to help you locate and repair possible machine malfunctions. Simply follow the three-step procedure listed below.

Step 1. LOCATE PROBLEM (SYMPTOM).
Look under the column labeled "PROBLEM (SYMPTOMS)". This column describes possible symptoms that the machine may exhibit. Find the listing that best describes the symptom that the machine is exhibiting. Symptoms are grouped into the following categories: power-up problems, function problems.

Step 2. PERFORM EXTERNAL TESTS.
The second column labeled "POSSIBLE AREAS OF MISADJUSTMENT(S)" lists the obvious external possibilities that may contribute to the machine symptom. Perform these tests/checks in the order listed. In general, these tests can be conducted without removing the case wrap-around cover.

Step 3. RECOMMENDED COURSE OF ACTION
The last column labeled "Recommended Course of Action" lists the most likely components that may have failed in your machine. It also specifies the appropriate test procedure to verify that the subject component is either good or bad. If there are a number of possible components, check the components in the order listed to eliminate one possibility at a time until you locate the cause of your problem.

All of the referenced test procedures referred to in the Troubleshooting Guide are described in detail at the end of this chapter. Refer to the Troubleshooting and Repair Table of Contents to locate each specific Test Procedure. All of the specified test points, components, terminal strips, etc. can be found on the referenced electrical wiring diagrams and schematics. Refer to the Electrical Diagrams Section Table of Contents to locate the appropriate diagram.

⚠ CAUTION

If for any reason you do not understand the test procedures or are unable to perform the tests/repairs safely, contact the Lincoln Electric Service Department for technical troubleshooting assistance before you proceed. Call 1-888-935-3878.

PC BOARD TROUBLESHOOTING PROCEDURES

⚠ WARNING

ELECTRIC SHOCK can kill.

- Have an electrician install and service this equipment. Turn the input power OFF at the fuse box before working on equipment. Do not touch electrically hot parts.

⚠ CAUTION

Sometimes machine failures appear to be due to PC board failures. These problems can sometimes be traced to poor electrical connections. To avoid problems when troubleshooting and replacing PC boards, please use the following procedure:

1. Determine to the best of your technical ability that the PC board is the most likely component causing the failure symptom.
2. Check for loose connections at the PC board to assure that the PC board is properly connected.
3. If the problem persists, replace the suspect PC board using standard practices to avoid static electrical damage and electrical shock. Read the warning inside the static resistant bag and perform the following procedures:

PC board can be damaged by static electricity.

ATTENTION Static-Sensitive Devices Handle only at Static-Safe Workstations

- Remove your body's static charge before opening the static-shielding bag. Wear an anti-static wrist strap. For safety, use a 1 Meg ohm resistive cord connected to a grounded part of the equipment frame.

- If you don't have a wrist strap, touch an un-painted, grounded, part of the equipment frame. Keep touching the frame to prevent static build-up. Be sure not to touch any electrically live parts at the same time.

- Tools which come in contact with the PC board must be either conductive, anti-static or static-dissipative.

- Remove the PC board from the static-shielding bag and place it directly into the equipment. Don't set the PC board on or near paper, plastic or cloth which could have a static charge. If the PC board can't be installed immediately, put it back in the static-shielding bag.

- If the PC board uses protective shorting jumpers, don't remove them until installation is complete.

- If you return a PC board to The Lincoln Electric Company for credit, it must be in the static-shielding bag. This will prevent further damage and allow proper failure analysis.

4. Test the machine to determine if the failure symptom has been corrected by the replacement PC board.

NOTE: It is desirable to have a spare (known good) PC board available for PC board troubleshooting.

NOTE: Allow the machine to heat up so that all electrical components can reach their operating temperature.

5. Remove the replacement PC board and substitute it with the original PC board to recreate the original problem.
   a. If the original problem does not reappear by substituting the original board, then the PC board was not the problem. Continue to look for bad connections in the control wiring harness, junction blocks, and terminal strips.
   b. If the original problem is recreated by the substitution of the original board, then the PC board was the problem. Reinstall the replacement PC board and test the machine.
6. Always indicate that this procedure was followed when warranty reports are to be submitted.

NOTE: Following this procedure and writing on the warranty report, "INSTALLED AND SWITCHED PC BOARDS TO VERIFY PROBLEM," will help avoid denial of legitimate PC board warranty claims.

Return to Section TOC
Return to Master TOC

Observe Safety Guidelines detailed in the beginning of this manual.

PROBLEMS (SYMPTOMS)	POSSIBLE AREAS OF MISADJUSTMENT(S)	RECOMMENDED COURSE OF ACTION
POWER-UP PROBLEMS		
The VRTEX™ 360 does not turn on when the On Switch is pushed. The green indicator light does not light.	Make certain the correct input voltage is being applied to the VRTEX™ 360. (115-230VAC single phase). Check input circuit breakers. Reset if tripped. Check the input cord for loose or faulty connections at the machine and at the plug.	Check for the correct input voltage at leads #101 to #102. These checks can be made at the input circuit breakers and also at the Upper (AC) Terminal Block. See the wiring diagram. If the correct volt is not present check the continuity of leads #101 and #102. If the correct volt is present at the Upper (AC) Terminal Block (leads #101 to #102) check the functionality of the ON Switch. If the switch is functioning correctly the input voltage should be present from lead #103A to lead #102 when the switch is pushed and held closed. See the wiring diagram. If the correct volt is present at the Upper (AC) Terminal Block (leads #101 to #102) check the functionality of the ON Switch. If the switch is functioning correctly the input voltage should be present from lead #103A to lead #102 when the switch is pushed and held closed. See the wiring diagram. Make sure the CPU power switch is in the ON position. If the correct input voltage is present at lead #103A to lead #102 check to make sure it is being applied to the CPU. See the wiring diagram.

⚠ CAUTION

If for any reason you do not understand the test procedures or are unable to perform the tests/repairs safely, contact the Lincoln Electric Service Department for technical troubleshooting assistance before you proceed. Call 1-888-935-3878.

Return to Section TOC
Return to Master TOC

Observe Safety Guidelines detailed in the beginning of this manual.

PROBLEMS (SYMPTOMS)	POSSIBLE AREAS OF MISADJUSTMENT(S)	RECOMMENDED COURSE OF ACTION
POWER-UP PROBLEMS		
(Continued)		If the correct input voltage is being applied to the CPU and the VRTEX™ 360 does not power-up the CPU may be faulty.
The VRTEX™ 360 does not power up when the ON Switch is pushed. The green indicator light does come on but does NOT stay on when the ON Switch is released.	Make certain the correct input voltage is being applied to the VRTEX™ 360. (115-230VAC single phase).	With the ON Switch activated 5VDC should be present at the Input Relay Coil. Terminal A1 (Red Lead) to Terminal A2 (Black Lead). See the wiring diagram. If the green indicator light is on the 5VDC should be present at the relay coil. Check for loose or faulty connections between the Input Relay, the Upper Terminal Block and the ON Switch. Check leads 101A and 103A. See the wiring diagram. If the 5VDC is being applied to the Input Relay Coil and the above mentioned connections and leads are OK the Input Relay Coil may be faulty. Replace. If the 5VDC is not present at Terminals A1 to A2 check for loose or faulty connections between the Input Relay Coil and the CPU USB port. See the wiring diagram. The CPU may be faulty.

⚠ CAUTION

If for any reason you do not understand the test procedures or are unable to perform the tests/repairs safely, contact the Lincoln Electric Service Department for technical troubleshooting assistance before you proceed. Call 1-888-935-3878.

Return to Section TOC
Return to Master TOC

Observe Safety Guidelines detailed in the beginning of this manual.

PROBLEMS (SYMPTOMS)	POSSIBLE AREAS OF MISADJUSTMENT(S)	RECOMMENDED COURSE OF ACTION
POWER-UP PROBLEMS		
The VRTEX™ 360 does not power up when the ON Switch is pushed. The green indicator light does come on and stays on.	The green light indicates that the CPU Computer Assembly is receiving input power and activating the green light via a USB cable.	Verify that the green LEDs on the 5VDC Power Supply and the 12VDC Power Supply are on. If they are not, then perform the ***5VDC Power Supply Test*** and the ***12VDC Power Supply Test.*** Carefully check the input voltage being applied to the Monitor at leads #103 to #102. It should be the same as the input line voltage. (115-230VAC single phase). See the wiring diagram. If the above checks are OK then check for broken cables and loose connections between the CPU and the User Interface, the 12VDC Supply and the Relay PC Board and the VGA Splitter, the 5VDC supply and the FMD Control Unit, and the Polhemus Interface Module. See the wiring diagram.

⚠ CAUTION

If for any reason you do not understand the test procedures or are unable to perform the tests/repairs safely, contact the Lincoln Electric Service Department for technical troubleshooting assistance before you proceed. Call 1-888-935-3878.

Return to Section TOC
Return to Master TOC

Observe Safety Guidelines detailed in the beginning of this manual.

PROBLEMS (SYMPTOMS)	POSSIBLE AREAS OF MISADJUSTMENT(S)	RECOMMENDED COURSE OF ACTION
FUNCTION PROBLEMS		
The Video Monitor does not function correctly. But the Helmet is working correctly and providing feedback information to the user.	Make sure the monitor is turned on. Check for loose or faulty connections at the Video Monitor. See the wiring diagram. Check for loose or faulty connections at the VGA Splitter. See the wiring diagram. Check for loose or faulty connections between the VGA Splitter and the Video Monitor. Check for loose or faulty connections between the VGA Splitter and the CPU Computer Assembly. See the wiring diagram.	Check for the presence of 12VDC at the VGA Splitter. See the wiring diagram. If the 12VDC is not present, check the continuity of the Splitter Power Cable. See the wiring diagram. Check for the correct AC input voltage (115 to 230VAC single phase) at the Video Monitor at lead #102 to lead #103. See the wiring diagram. Check for damaged VGA connections between the VGA Splitter and the CPU Computer Assembly. See the wiring diagram. Note: When replacing the cable make certain pin #15 is NOT present. If the correct input voltages and signals are being applied to the VGA Splitter and Monitor and the Monitor does not function correctly then replace the Video Monitor and the VGA Splitter. The CPU may be faulty.

⚠ CAUTION

If for any reason you do not understand the test procedures or are unable to perform the tests/repairs safely, contact the Lincoln Electric Service Department for technical troubleshooting assistance before you proceed. Call 1-888-935-3878.

Return to Section TOC
Return to Master TOC

Observe Safety Guidelines detailed in the beginning of this manual.

PROBLEMS (SYMPTOMS)	POSSIBLE AREAS OF MISADJUSTMENT(S)	RECOMMENDED COURSE OF ACTION
FUNCTION PROBLEMS		
The Display P.C. Board does not function correctly. The VRTEX™ 360 seems to work correctly.	Check for loose or faulty connections between the USB Interface Module and the Display Board. See the wiring diagram. Check for loose or faulty connections at the USB cable connecting the CPU to the USB Interface Module.	Check for the presence of 5VDC at the Display Board leads #201 to #202. See the wiring diagram. If the 5VDC is present and the Display does not light the Display Board may be faulty. Replace. If the 5VDC is not present at the Display Board check for the presence of 5VDC at lead #201 to #202 at the USB Interface Module. See the wiring diagram. If the 5VDC is not present the USB Interface Module may be faulty. Perform the ***USB Interface Module Test.***
Some of the User Interface Controls and/or Indicators do not function.	Check the functionality of the device(s) in question. The switches and Joy Stick contacts are momentary, normally open devices. The indicators are colored LEDs. See the wiring diagram. The Wire Feed Speed and Output Controls are encoders and are connected to the User Interface Digital IO Module. See the wiring diagram. Make sure the devices in question are not damaged and are functional.	Check the continuity between the non-functioning device(s) and the User Interface Digital IO Module. Check for loose or faulty connections. See the wiring diagram. Check for loose or faulty connections (ribbon cable) between the User Interface Digital I/O Module and the terminal block interface. Also, check the leads for loose or faulty connections between the terminal block interface and the User Interface Controls and Indicators. See wiring diagram.
All of the User Interface Controls and Indicators do not function.	Make certain the correct input voltage (115-230VAC single phase) is being applied to the VRTEX™ 360 machine.	Perform the ***User Interface Digital IO Module Test.*** Check for loose or faulty connections (USB cable) between the CPU and the User Interface Digital IO Module.

⚠ CAUTION

If for any reason you do not understand the test procedures or are unable to perform the tests/repairs safely, contact the Lincoln Electric Service Department for technical troubleshooting assistance before you proceed. Call 1-888-935-3878.

Return to Section TOC
Return to Master TOC

Observe Safety Guidelines detailed in the beginning of this manual.

PROBLEMS (SYMPTOMS)	POSSIBLE AREAS OF MISADJUSTMENT(S)	RECOMMENDED COURSE OF ACTION
FUNCTION PROBLEMS		
(Continued)		Check for loose or faulty connections (ribbon cable) between the User Interface Digital I/O Module and the terminal block interface. See wiring diagram
The user is not receiving any visual or audio feedback information in the helmet (FMD).	Make sure the Helmet (FMD) is connected properly. Check the USB connection between the Polhemus Interface Module and the CPU for loose or faulty connections.	Check the USB connections between the Polhemus Interface Module and the CPU for loose or faulty connections. Make sure the FMD Control Unit is are receiving the 5VDC supply voltage. See the wiring diagram. Make sure the FMD Control Unit is turned on. If the 5VDC supply is not present perform the ***5VDC Supply Test.*** Perform the ***FMD Control Unit Test.*** The FMD may be faulty. The CPU may be faulty.

⚠ CAUTION

If for any reason you do not understand the test procedures or are unable to perform the tests/repairs safely, contact the Lincoln Electric Service Department for technical troubleshooting assistance before you proceed. Call 1-888-935-3878.

Return to Section TOC
Return to Master TOC

Observe Safety Guidelines detailed in the beginning of this manual.

PROBLEMS (SYMPTOMS)	POSSIBLE AREAS OF MISADJUSTMENT(S)	RECOMMENDED COURSE OF ACTION
FUNCTION PROBLEMS		
The VRTEX™ 360 does not function correctly in the SMAW (stick) mode. But it functions correctly in the VR GMAW mode.	Make certain the SMAW (stick) electrode device is connected properly. Make sure the correct welding procedures are set.	Check for loose or faulty connections between the Motor Control PC Board and the VR SMAW Device. See the wiring diagram. Check for loose or faulty connections between the Motor Control PC Board and the Relay PC Board. See the wiring diagram. Make sure the Motor Control PC Board is receiving the 12VDC supply from the Relay PC Board. Check at leads #72 to #73. If the 12VDC is not present the Relay PC Board may be faulty. See the wiring diagram. Check for loose or faulty connections at the ribbon cable, between the USB Digital I/O Module and the terminal block interface. Also check between the terminal block interface and the Relay Board. See the wiring diagram. Perform the ***Interface Digital Module IO Test.*** The VR SMAW device may be faulty.

⚠ CAUTION

If for any reason you do not understand the test procedures or are unable to perform the tests/repairs safely, contact the Lincoln Electric Service Department for technical troubleshooting assistance before you proceed. Call 1-888-935-3878.

Return to Section TOC
Return to Master TOC

Observe Safety Guidelines detailed in the beginning of this manual.

PROBLEMS (SYMPTOMS)	POSSIBLE AREAS OF MISADJUSTMENT(S)	RECOMMENDED COURSE OF ACTION
FUNCTION PROBLEMS		
The VRTEX™ 360 does not function correctly in the GMAW mode. It works correctly in the VR SMAW (stick) mode.	Make sure the VR GMAW Device is connected properly. Make sure the correct welding procedures are set.	Check for loose or faulty connections, at the ribbon cable, between the USB Digital I/O Module and the terminal block interface. Also check between the terminal block interface and the Relay Board. See the wiring diagram Check the VR GMAW trigger connector (audio type) for a loose or faulty connection. Perform the ***Interface Digital Module IO Test.*** The Relay PC Board may be faulty. The VR GMAW Device may be faulty.
There is jitter or shaking in the Helmet display and Monitor.	Make sure there is not any TIG welding or high frequency interference in the immediate area.	Check for loose or faulty connections between the Helmet/Monitor and the VRTEX™ 360 machine. See the wiring diagram.
The CPU constantly looses the current time and date. At initial boot-up the monitor reads “CMOS” battery failed.	The internal battery in the CPU has failed. A qualified technician needs to address this problem.	Perform the ***CPU Removal Procedure***. Replace the internal battery in the CPU. (KTS CR2032)
As viewed through the helmet and the monitor, the entire stand assembly appears in the middle of the screen and the environment does not move.	N/A	Check all cables and leads to the Polhemus Interface Module for loose or faulty connections. Perform the ***Polhemus Interface Module Test.***

⚠ CAUTION

If for any reason you do not understand the test procedures or are unable to perform the tests/repairs safely, contact the Lincoln Electric Service Department for technical troubleshooting assistance before you proceed. Call 1-888-935-3878.

Return to Section TOC
Return to Master TOC

Observe Safety Guidelines detailed in the beginning of this manual.

PROBLEMS (SYMPTOMS)	POSSIBLE AREAS OF MISADJUSTMENT(S)	RECOMMENDED COURSE OF ACTION
FUNCTION PROBLEMS		
The weld coupon image is a different configuration than the physical coupon.	Either the wrong coupon is on the stand or the wrong configuration as been selected in the software. Press the menu button and select change coupon type. Change the software selections so that the images on the screen match the hardware you are using.	N/A
The arm and/or table are different than the visuals in the software.	The software information may be incorrect. Press the menu button and select change process. Make sure the images on the screen match the hardware being used.	N/A
When the check settings are activated the incorrect settings appear.	Check the settings in the Instructor Mode. Make sure all of the settings are correct for the process and parameters being used. Check for the acceptable ranges for the Lincoln defaults.	N/A
Holding the green button in does not shut down the VRTEX™ 360	To shut down the VRTEX™ 360 select menu and then select shutdown.	N/A
Sometimes the view in the helmet seems to shake, wobble or jitter.	Make sure the helmet is close to the work piece. The further the helmet is from the work piece the more jitter there may be in the helmet display. Also make sure there are not other objects or frequencies that are interfering with the system. ***See the Installation Section*** of this manual.	Check for loose or faulty connections on the VGA cable between the Relay Board and the Polhemus Interface Module. See the wiring diagram. Perform the ***Polhemus Interface Module Test.***

⚠ CAUTION

If for any reason you do not understand the test procedures or are unable to perform the tests/repairs safely, contact the Lincoln Electric Service Department for technical troubleshooting assistance before you proceed. Call 1-888-935-3878.

Return to Section TOC
Return to Master TOC

Observe Safety Guidelines detailed in the beginning of this manual.

PROBLEMS (SYMPTOMS)	POSSIBLE AREAS OF MISADJUSTMENT(S)	RECOMMENDED COURSE OF ACTION
FUNCTION PROBLEMS		
The students' reports are not accessible.	The students' reports can only be saved via the USB port on the front of the VRTEX™ 360. If a USB memory stick is not plugged into the USB port or if there is not available memory on the USB stick the students' reports will not be saved.	N/A
Previous weld pass data is not accessible on the LASER screen.	"End Pass" must be activated before starting a new pass. If a new coupon is started the data will only be available for the first pass. Again "End Pass" must be pressed before a new pass is started Use the joystick to go to pass number and change which pass data you are looking for. Note that some configurations only have one pass capabilities. See the Lincoln default tolerances.	N/A
Some or none of the welding parameters, defects, or discontinuities are graphing on the LASER screen.	These items may be "toggled" off. Use the joystick to highlight the desired items and then press the red select button to toggle them on. Also, make sure that you are on a currently welded pass.	N/A
The user is not sure of which tolerances they are using.	Whatever tolerance set that is first displayed is the tolerance set being used. Go to the instructor mode to change tolerances.	N/A

⚠ CAUTION

If for any reason you do not understand the test procedures or are unable to perform the tests/repairs safely, contact the Lincoln Electric Service Department for technical troubleshooting assistance before you proceed. Call 1-888-935-3878.

Return to Section TOC
Return to Master TOC

NOTES

F-14

Return to Section TOC
Return to Section TOC
Return to Section TOC
Return to Section TOC
Return to Master TOC
Return to Master TOC
Return to Master TOC
Return to Master TOC

5 VDC SUPPLY TEST PROCEDURE

⚠ WARNING

Service and repair should be performed only by Lincoln Electric factory trained personnel. Unauthorized repairs performed on this equipment may result in danger to the technician or machine operator and will invalidate your factory warranty. For your safety and to avoid electrical shock, please observe all safety notes and precautions detailed throughout this manual.

If for any reason you do not understand the test procedures or are unable to perform the test/repairs safely, contact the Lincoln Electric Service Department for electrical troubleshooting assistance before you proceed. Call 1-888-935-3878.

TEST DESCRIPTION

This procedure will aid the technician in the determining if the 5 VDC Supply is functioning properly.

MATERIALS NEEDED

Voltmeter
Flathead Screwdriver
Wiring Diagram

Return to Section TOC
Return to Master TOC

5 VDC SUPPLY TEST PROCEDURE (continued)

FIGURE F.1 – 5 VDC SUPPLY LOCATION

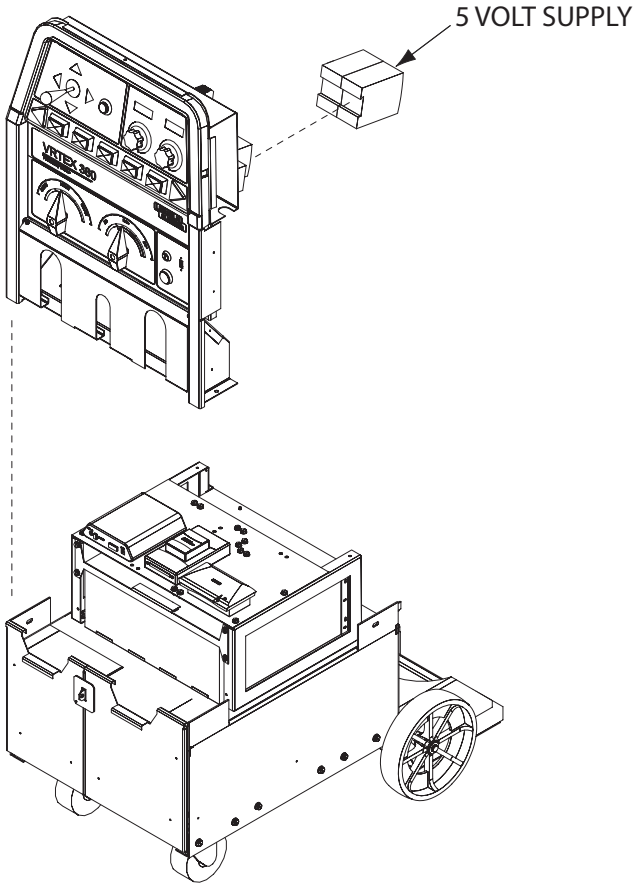

⚠ WARNING

ELECTRIC SHOCK can kill.

- Have a qualified individual install and service this equipment.
- Turn the input supply power OFF at the disconnect switch or fuse box before working on this equipment.
- Do not touch electrically hot parts.

TEST PROCEDURE

1. Disconnect the input power.
2. Perform the ***Monitor and Pedestal Removal Procedure***.
3. Perform the ***Case Cover Removal Procedure***.
4. Connect the input power.
5. Power up the machine.
6. Locate the 5 Volt Supply. See Figure F.1.
7. Check to make sure the green LED on back of power supply is lit. ***See Figure F.2.*** If so, continue to step 10.

NOTE: This indicates that the machine is receiving the correct input power. If the green LED is not lit, continue to step 8.

Return to Section TOC
Return to Master TOC

5 VDC SUPPLY TEST PROCEDURE (continued)

FIGURE F.2 – 5 VDC SUPPLY LEAD LOCATION

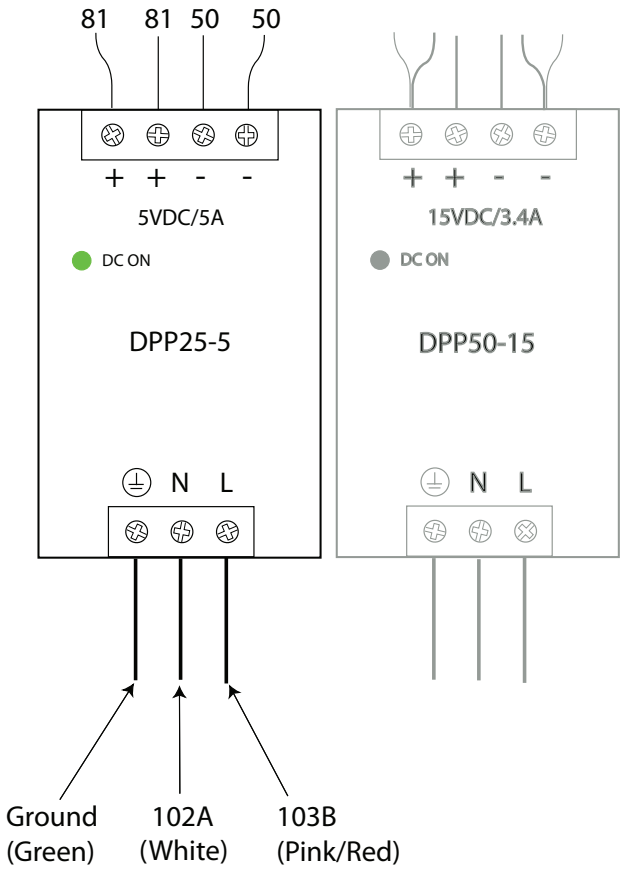

8. Using a volt/ohmmeter, check for the presence of input power at leads 102A to 103B at the supply terminals. See Figure F.2.
9. If the correct input voltage is not present in the previous step, check for loose or faulty connections at the terminal blocks and associated wiring. See wiring diagram.
10. Check for the presence of 5VDC at leads 50(-) to 81(+). See wiring diagram. If 5 volts are present, the 5 Volt Supply is functioning properly.
11. If 5VDC is not present, label and disconnect all associated leads (50(-) to 81(+)) from the 5 Volt Supply terminals.
12. Re-check for the presence of 5VDC at the supply terminals.
13. If 5VDC is not present and the correct input voltage is being applied, the 5 Volt Supply is faulty. Replace. ***Perform the 5 VDC Supply Removal and Replacement Procedure.***
14. If 5VDC is present with all leads (50(-) to 81(+)) disconnected, there is a heavy load or short circuit associated with leads 50(-) to 81(+) and the associated wiring. See wiring diagram.
15. Replace all previously disconnected leads.
16. Perform the ***Case Cover Replacement Procedure***.
17. Perform the ***Monitor and Pedestal Replacement Procedure***.

Return to Section TOC
Return to Master TOC

NOTES

F-18

Return to Section TOC
Return to Section TOC
Return to Section TOC
Return to Section TOC
Return to Master TOC
Return to Master TOC
Return to Master TOC
Return to Master TOC

12/15 VDC SUPPLY TEST PROCEDURE

⚠ WARNING

Service and repair should be performed only by Lincoln Electric factory trained personnel. Unauthorized repairs performed on this equipment may result in danger to the technician or machine operator and will invalidate your factory warranty. For your safety and to avoid electrical shock, please observe all safety notes and precautions detailed throughout this manual.

If for any reason you do not understand the test procedures or are unable to perform the test/repairs safely, contact the Lincoln Electric Service Department for electrical troubleshooting assistance before you proceed. Call 1-888-935-3878.

TEST DESCRIPTION

This procedure will aid the technician in the determining if the 12/15 VDC Supply is functioning properly.

MATERIALS NEEDED

Voltmeter
Flathead Screwdriver
Wiring Diagram

Return to Section TOC
Return to Master TOC

12/15 VDC SUPPLY TEST PROCEDURE (continued)

FIGURE F.3 – 12/15 VDC SUPPLY LOCATION

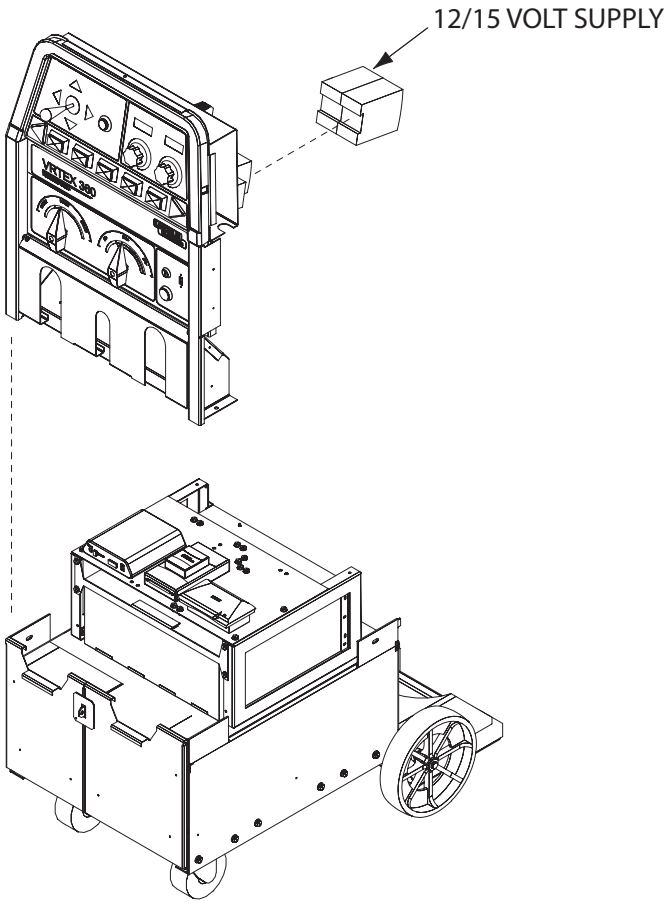

⚠ WARNING

ELECTRIC SHOCK can kill.

- Have a qualified individual install and service this equipment.
- Turn the input supply power OFF at the disconnect switch or fuse box before working on this equipment.
- Do not touch electrically hot parts.

TEST PROCEDURE

1. Disconnect the input power.
2. Perform the ***Monitor and Pedestal Removal Procedure***.
3. Perform the ***Case Cover Removal Procedure***.
4. Connect the input power.
5. Power up the machine.
6. Locate the 12/15 Volt Supply. See Figure F.3.
7. Check to make sure the green LED on back of power supply is lit. ***See Figure F.4.*** If so, continue to step 10.

NOTE: This indicates that the machine is receiving the correct input power. If the green LED is not lit, continue to step 8.

Return to Section TOC
Return to Master TOC

12/15 VDC SUPPLY TEST PROCEDURE (continued)

FIGURE F.4 – 12/15 VDC SUPPLY LEAD LOCATION

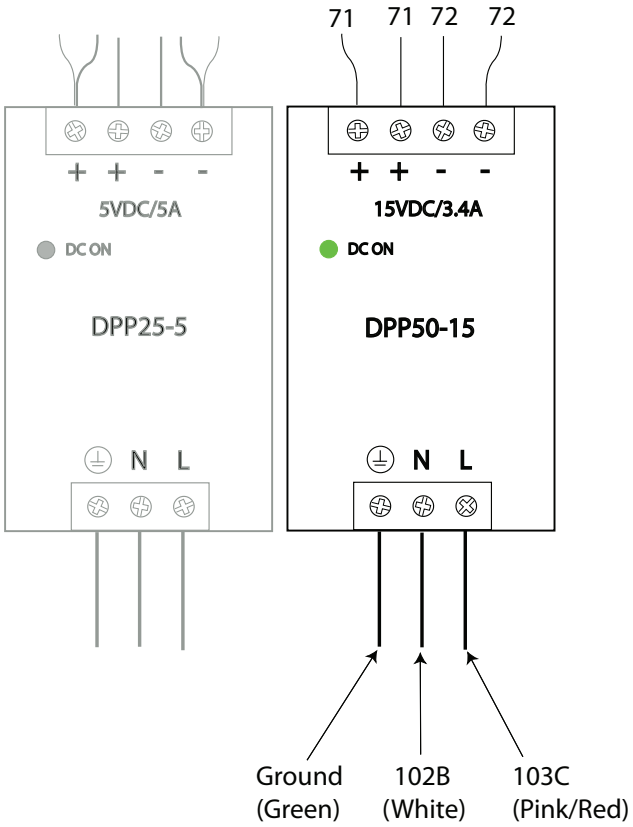

8. Using a volt/ohmmeter, check for the presence of input power at leads 102B to 103C at the supply terminals. See Figure F.4.
9. If the correct input voltage is not present in the previous step, check for loose or faulty connections at the terminal blocks and associated wiring. See wiring diagram.
10. Check for the presence of 12VDC at leads 72(-) to 71(+). See wiring diagram. If 12 volts are present, the 12 Volt Supply is functioning properly.
11. If 12VDC is not present, label and disconnect all associated leads (72(-) to 71(+)) from the 12 Volt Supply terminals.
12. Re-check for the presence of 12VDC at the supply terminals.
13. If 12VDC is not present and the correct input voltage is being applied, the 12 Volt Supply is faulty. Replace. ***Perform the 12/15 VDC Supply Removal and Replacement Procedure.***
14. If 12VDC is present with all leads (72(-) to 71(+)) disconnected, there is a heavy load or short circuit associated with leads 72(-) to 71(+) and the associated wiring. See wiring diagram.
15. Replace all previously disconnected leads.
16. Perform the ***Case Cover Replacement Procedure***.
17. Perform the ***Monitor and Pedestal Replacement Procedure***.

Return to Section TOC
Return to Master TOC

NOTES

F-22

Return to Section TOC
Return to Master TOC
Return to Section TOC
Return to Master TOC
Return to Section TOC
Return to Master TOC
Return to Section TOC
Return to Master TOC

FACE MOUNTED DISPLAY (FMD) CONTROL UNIT TEST

⚠ WARNING

Service and repair should be performed only by Lincoln Electric factory trained personnel. Unauthorized repairs performed on this equipment may result in danger to the technician or machine operator and will invalidate your factory warranty. For your safety and to avoid electrical shock, please observe all safety notes and precautions detailed throughout this manual.

If for any reason you do not understand the test procedures or are unable to perform the test/repairs safely, contact the Lincoln Electric Service Department for electrical troubleshooting assistance before you proceed. Call 1-888-935-3878.

TEST DESCRIPTION

This procedure will aid the technician in determining if the Face Mounted Display (FMD) is functioning properly.

MATERIALS NEEDED

Voltmeter
Wiring Diagram

Return to Section TOC
Return to Master TOC

FACE MOUNTED DISPLAY (FMD) CONTROL UNIT TEST (continued)

FIGURE F.5 – FMD LOCATION

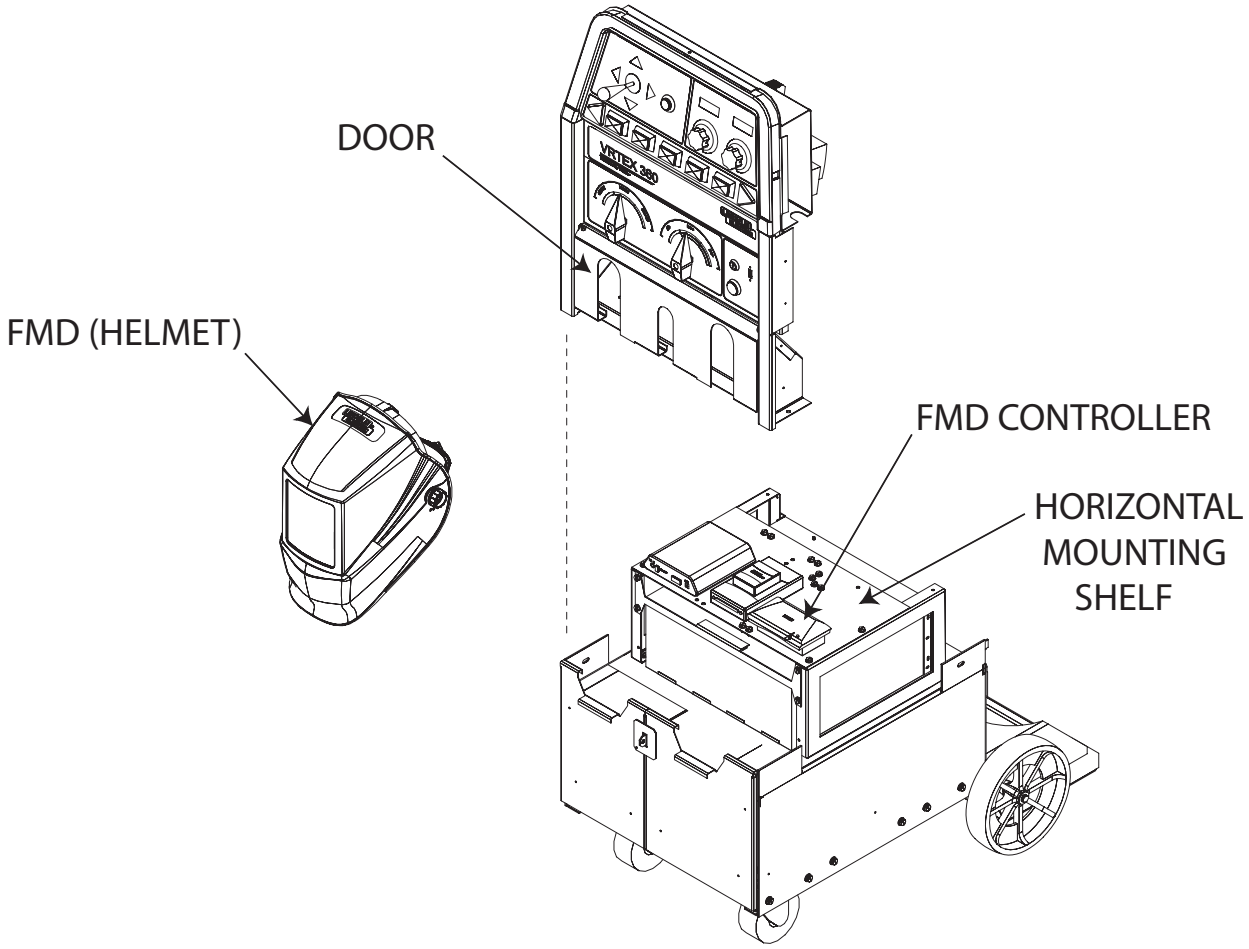

⚠ WARNING

ELECTRIC SHOCK can kill.

- Have a qualified individual install and service this equipment.
- Turn the input supply power OFF at the disconnect switch or fuse box before working on this equipment.
- Do not touch electrically hot parts.

TEST PROCEDURE

1. Disconnect the input power.
2. Perform the ***Monitor and Pedestal Removal Procedure***.
3. Perform the ***Case Cover Removal Procedure***.
4. Connect the input power.
5. Power up the machine.
6. Locate the FMD Control Unit. See Figure F.5.
7. Check to make sure the red LED on the Control Unit is lit. ***See Figure F.6.*** If the red LED is not lit, make sure the FMD power switch is in the "ON" position. Not all units have an "ON" switch.
8. Verify that the FMD Control Unit is receiving 5 VDC from the 5 volt power supply. If not, check for loose or faulty connections between the 5 volt supply and the FMD control unit. See wiring diagram.

Return to Section TOC
Return to Master TOC

FACE MOUNTED DISPLAY (FMD) CONTROL UNIT TEST (continued)

FIGURE F.6 – FMD CONTROL UNIT

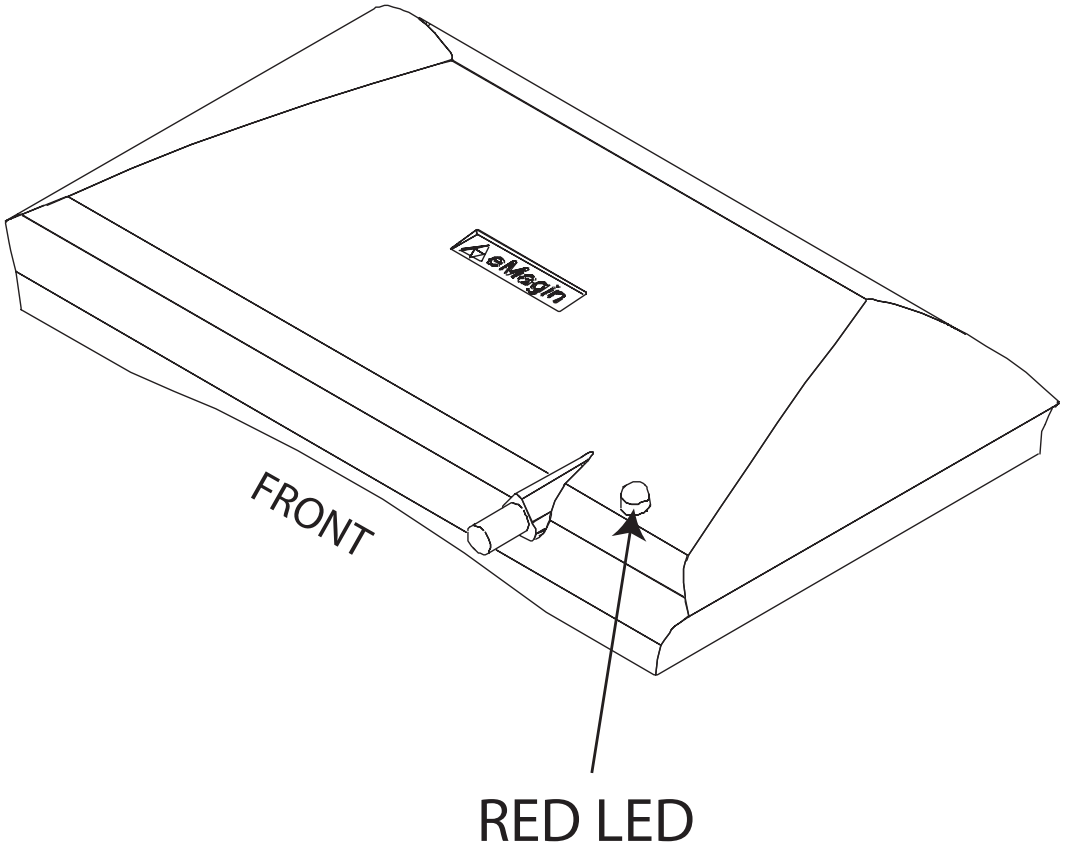

9. Check for loose or faulty connections between the FMD control unit and the following;

   • VGA Splitter

   • Polhemus Control

   • CPU

NOTE: See wiring diagram.

10. If the FMD controller is receiving 5VDC and all the proper connections are intact, the FMD may be faulty. Replace. ***Perform the FMD Control Unit Removal and Replacement Procedure.***
11. Perform the ***Case Cover Replacement Procedure***.
12. Perform the ***Monitor and Pedestal Replacement Procedure***.

Return to Section TOC
Return to Master TOC

NOTES

F-26

Return to Section TOC
Return to Master TOC
Return to Section TOC
Return to Master TOC
Return to Section TOC
Return to Master TOC
Return to Section TOC
Return to Master TOC

INTERFACE DIGITAL MODULE I/O TEST PROCEDURE

⚠ WARNING

Service and repair should be performed only by Lincoln Electric factory trained personnel. Unauthorized repairs performed on this equipment may result in danger to the technician or machine operator and will invalidate your factory warranty. For your safety and to avoid electrical shock, please observe all safety notes and precautions detailed throughout this manual.

If for any reason you do not understand the test procedures or are unable to perform the test/repairs safely, contact the Lincoln Electric Service Department for electrical troubleshooting assistance before you proceed. Call 1-888-935-3878.

TEST DESCRIPTION

This procedure will aid the technician in determining if the Interface Digital Module I/O is functioning properly.

MATERIALS NEEDED

Voltmeter
Wiring Diagram

Return to Section TOC
Return to Master TOC

INTERFACE DIGITAL MODULE I/O TEST PROCEDURE (continued)

FIGURE F.7 – INTERFACE DIGITAL MODULE I/O LOCATION

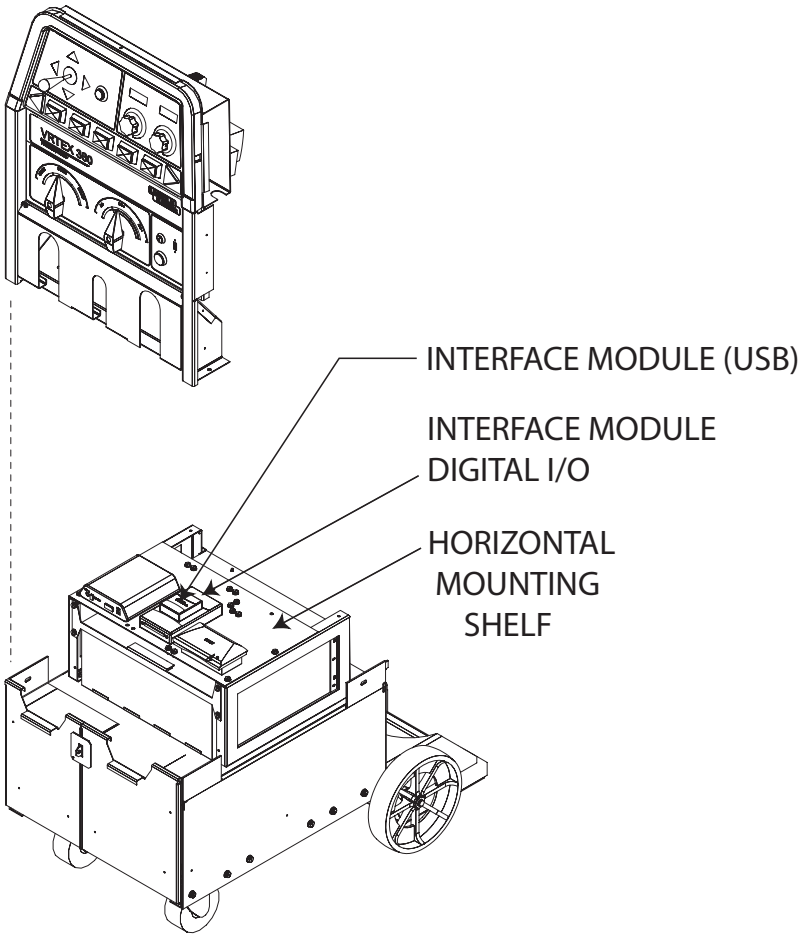

⚠ WARNING

ELECTRIC SHOCK can kill.

- Have a qualified individual install and service this equipment.
- Turn the input supply power OFF at the disconnect switch or fuse box before working on this equipment.
- Do not touch electrically hot parts.

TEST PROCEDURE

1. Disconnect the input power.
2. Perform the ***Monitor and Pedestal Removal Procedure***.
3. Perform the ***Case Cover Removal Procedure***.
4. Connect the input power.
5. Power up the machine.
6. Locate the Interface Digital Module I/O. See Figure F.7.

Return to Section TOC
Return to Master TOC

INTERFACE DIGITAL MODULE I/O TEST PROCEDURE (continued)

FIGURE F.8 – INTERFACE DIGITAL MODULE I/O (REAR)

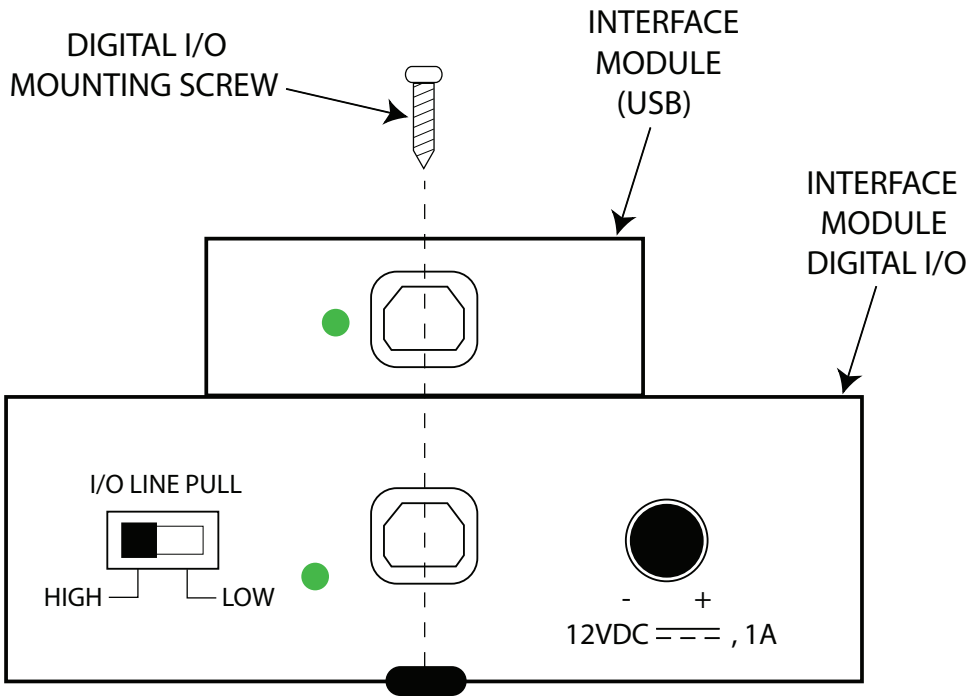

7. Check to make sure the green LED on the back of the Interface Digital Module I/O is lit. See Figure F.8.
8. If the green LED is lit, the Interface Digital Module I/O is functioning properly.
9. Verify that the switch on the back of the unit is set to the "HIGH" position. See Figure F.8.
10. If the green LED is not lit, make sure the USB cable is connected properly between the Interface Digital Module I/O and the CPU. Try connecting a new USB cable to a different available port on the CPU.

NOTE: Make sure that there are no shorts between the ribbon cables and the user interface controls.

11. The Interface Digital Module I/O may be faulty. ***Perform the Interface Digital Module I/O Removal and Replacement Procedure.***
12. Perform the ***Case Cover Replacement Procedure***.
13. Perform the ***Monitor and Pedestal Replacement Procedure***.

Return to Section TOC
Return to Master TOC

NOTES

F-30

Return to Section TOC
Return to Section TOC
Return to Section TOC
Return to Section TOC
Return to Master TOC
Return to Master TOC
Return to Master TOC
Return to Master TOC

USB INTERFACE MODULE TEST PROCEDURE

⚠ WARNING

Service and repair should be performed only by Lincoln Electric factory trained personnel. Unauthorized repairs performed on this equipment may result in danger to the technician or machine operator and will invalidate your factory warranty. For your safety and to avoid electrical shock, please observe all safety notes and precautions detailed throughout this manual.

If for any reason you do not understand the test procedures or are unable to perform the test/repairs safely, contact the Lincoln Electric Service Department for electrical troubleshooting assistance before you proceed. Call 1-888-935-3878.

TEST DESCRIPTION

This procedure will aid the technician in determining if the USB Interface Module is functioning properly.

MATERIALS NEEDED

Voltmeter
Wiring Diagram

Return to Section TOC
Return to Master TOC

USB INTERFACE MODULE TEST PROCEDURE (continued)

FIGURE F.9 – USB INTERFACE MODULE LOCATION

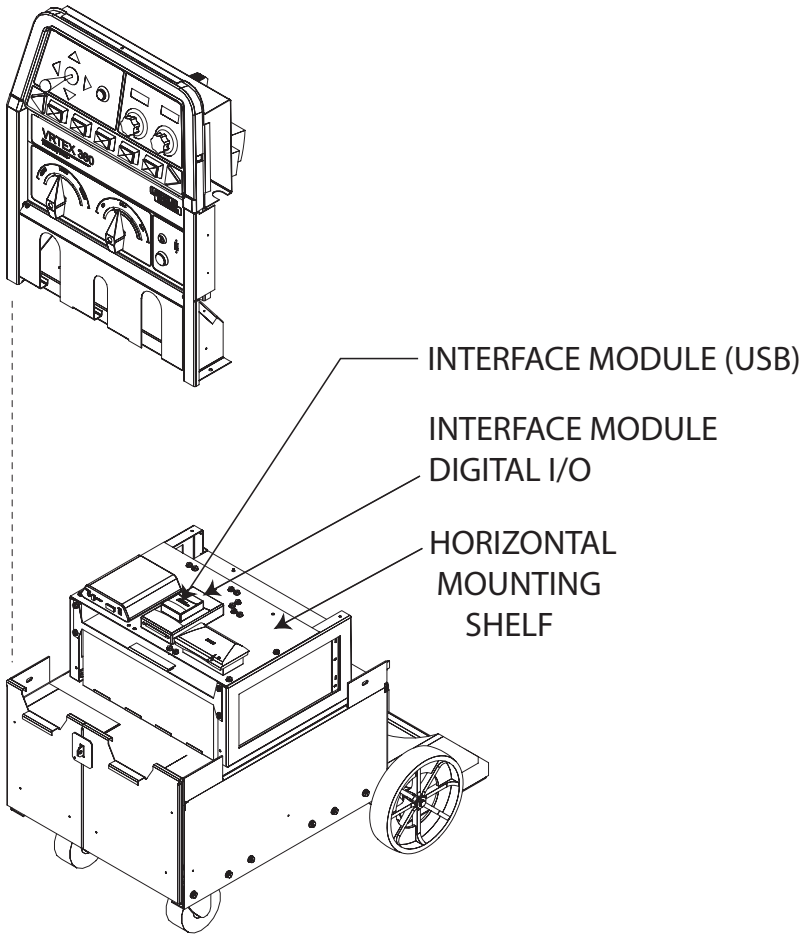

⚠ WARNING

ELECTRIC SHOCK can kill.

- Have a qualified individual install and service this equipment.
- Turn the input supply power OFF at the disconnect switch or fuse box before working on this equipment.
- Do not touch electrically hot parts.

TEST PROCEDURE

1. Disconnect the input power.
2. Perform the ***Monitor and Pedestal Removal Procedure***.
3. Perform the ***Case Cover Removal Procedure***.
4. Connect the input power.
5. Power up the machine.
6. Locate the USB Interface Module. See Figure F.9.

Return to Section TOC
Return to Master TOC

USB INTERFACE MODULE TEST PROCEDURE (continued)

FIGURE F.10 – USB INTERFACE MODULE GREEN LED (REAR)

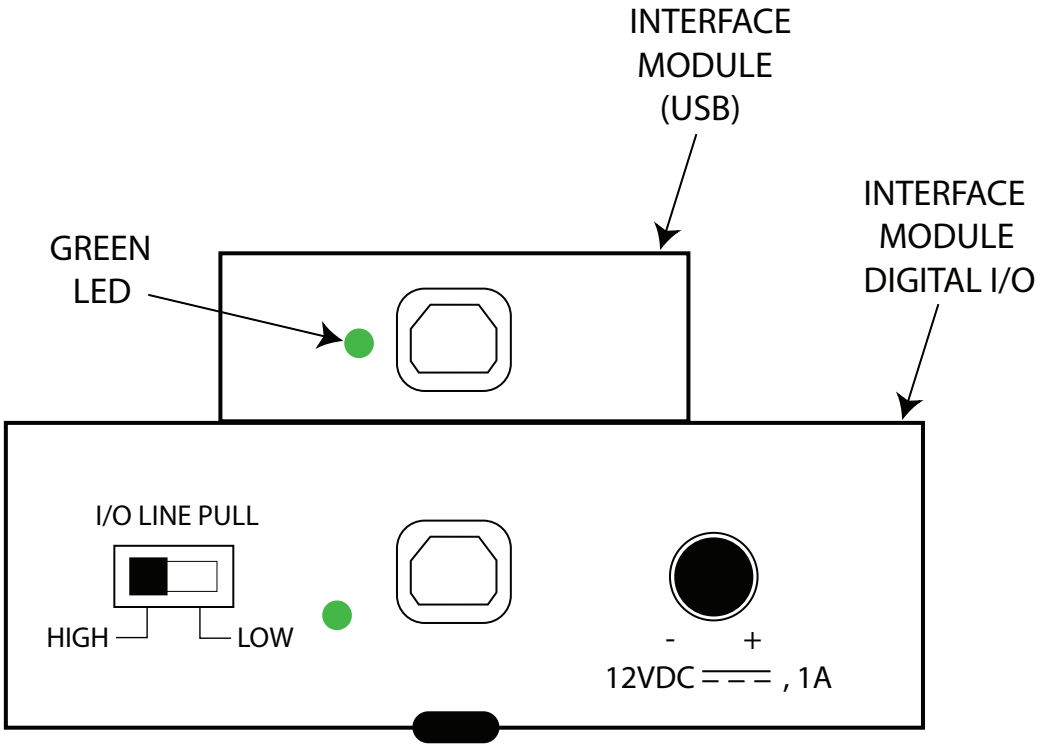

7. Check to make sure the green LED on the back of the USB Interface Module is lit. See Figure F.10.
8. If the green LED is lit, check for the presence of 5VDC at leads 201(-) to 202(+). See wiring diagram.
9. If the green LED is lit and the 5VDC at leads 201(-) to 202(+) is present, the USB Interface Module is functioning properly.
10. If the green LED is not lit, check the USB connection between the CPU and the USB Interface Module. Try connecting a new USB cable to a different available port on the CPU. See wiring diagram.
11. If the LED is not lit and the USB connection is good, the USB Interface Module may be faulty. Perform the ***USB Interface Module Removal and Replacement Procedure.***
12. Perform the ***Case Cover Replacement Procedure***.
13. Perform the ***Monitor and Pedestal Replacement Procedure***.

Return to Section TOC
Return to Master TOC

NOTES

F-34

Return to Section TOC
Return to Section TOC
Return to Section TOC
Return to Section TOC
Return to Master TOC
Return to Master TOC
Return to Master TOC
Return to Master TOC

POLHEMUS INTERFACE MODULE TEST PROCEDURE

⚠ WARNING

Service and repair should be performed only by Lincoln Electric factory trained personnel. Unauthorized repairs performed on this equipment may result in danger to the technician or machine operator and will invalidate your factory warranty. For your safety and to avoid electrical shock, please observe all safety notes and precautions detailed throughout this manual.

If for any reason you do not understand the test procedures or are unable to perform the test/repairs safely, contact the Lincoln Electric Service Department for electrical troubleshooting assistance before you proceed. Call 1-888-935-3878.

TEST DESCRIPTION

This procedure will aid the technician in determining if the Polhemus Interface Module is functioning properly.

MATERIALS NEEDED

Voltmeter
Wiring Diagram

Return to Section TOC
Return to Master TOC

POLHEMUS INTERFACE MODULE TEST PROCEDURE (continued)

FIGURE F.11 – POLHEMUS INTERFACE MODULE LOCATION

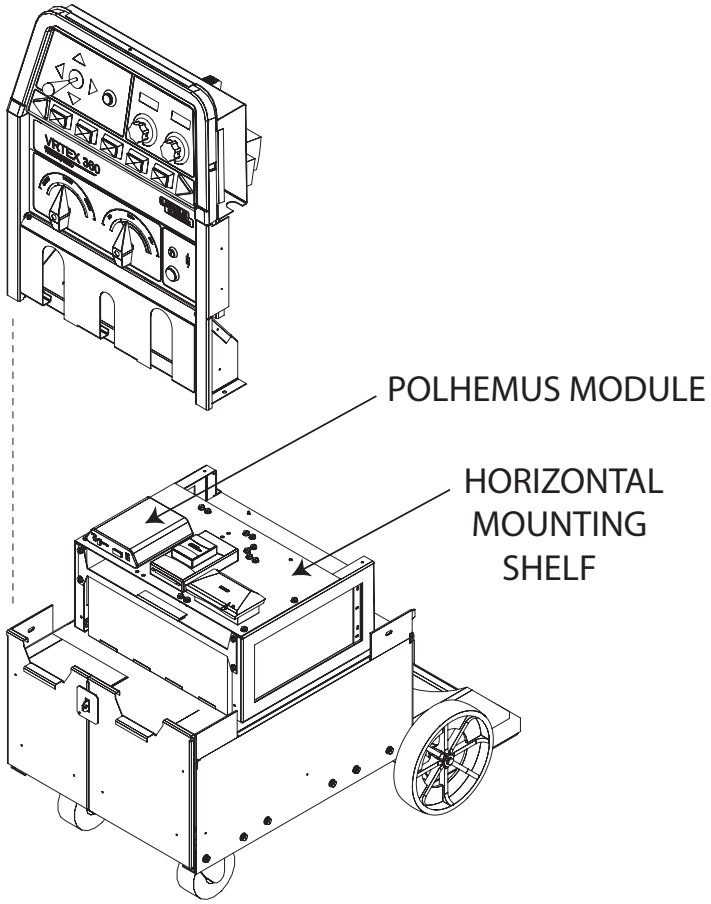

⚠ WARNING

ELECTRIC SHOCK can kill.

- Have a qualified individual install and service this equipment.
- Turn the input supply power OFF at the disconnect switch or fuse box before working on this equipment.
- Do not touch electrically hot parts.

TEST PROCEDURE

1. Disconnect the input power.
2. Perform the ***Monitor and Pedestal Removal Procedure***.
3. Perform the ***Case Cover Removal Procedure***.
4. Connect the input power.
5. Power up the machine.
6. Locate the Polhemus Interface Module. See Figure F.11.

Return to Section TOC
Return to Master TOC

POLHEMUS INTERFACE MODULE TEST PROCEDURE (continued)

FIGURE F.12 – POLHEMUS INTERFACE MODULE

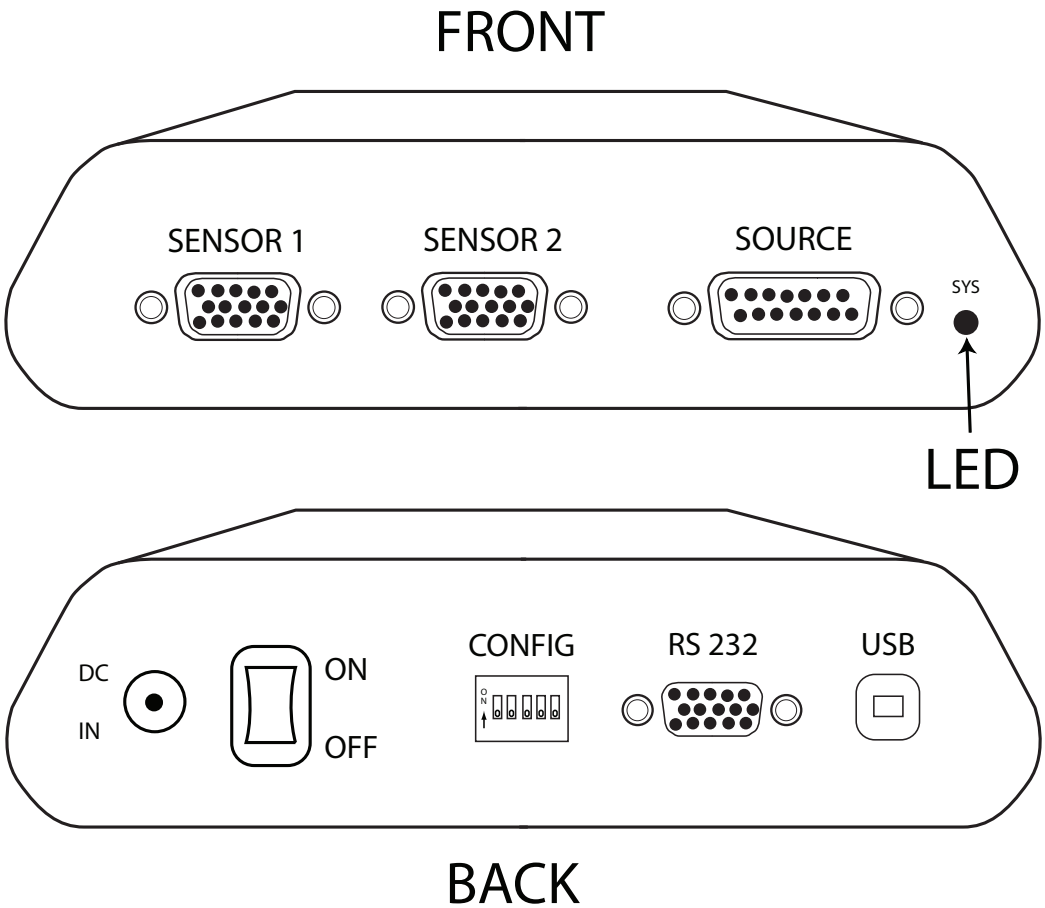

7. Check to make sure the LED on the front of the Polhemus Interface Module is lit. See Figure F.12.

NOTE: At initial power up, the LED will be red, then a flashing red. When the machine is completely initialized, the LED will turn green.

8. Make sure the switch on the back of the Polhemus Interface Module is in the "ON" position.
9. Make sure all the dip switch settings are in the down position. See Figure F.12.
10. If the LED is lit, check for loose or faulty connections between the FMD control unit and the following;
    - Welding Stand
    - CPU
    - FMD Control Unit
    - Relay PC Board

Note: See wiring diagram.

11. If the LED is not lit, check for the presence of 5VDC at the input terminal. See wiring diagram.
12. If the LED is not lit and the 5VDC is present, the Polhemus Interface Module may be faulty. Perform the ***Polhemus Interface Module Removal and Replacement Procedure.***
12. Perform the ***Case Cover Replacement Procedure***.
13. Perform the ***Monitor and Pedestal Replacement Procedure***.

Return to Section TOC
Return to Master TOC

NOTES

F-38

Return to Section TOC
Return to Section TOC
Return to Section TOC
Return to Section TOC
Return to Master TOC
Return to Master TOC
Return to Master TOC
Return to Master TOC

MONITOR AND PEDESTAL REMOVAL AND REPLACEMENT PROCEDURE

⚠ WARNING

Service and repair should be performed only by Lincoln Electric factory trained personnel. Unauthorized repairs performed on this equipment may result in danger to the technician or machine operator and will invalidate your factory warranty. For your safety and to avoid electrical shock, please observe all safety notes and precautions detailed throughout this manual.

If for any reason you do not understand the test procedures or are unable to perform the test/repairs safely, contact the Lincoln Electric Service Department for electrical troubleshooting assistance before you proceed. Call 1-888-935-3878.

TEST DESCRIPTION

This procedure will aid the technician in the removal and replacement of the Monitor and Pedestal.

MATERIALS NEEDED

7/16" Wrench
Phillips Screwdriver

Return to Section TOC
Return to Master TOC

MONITOR AND PEDESTAL REMOVAL AND REPLACEMENT PROCEDURE (continued)

FIGURE F.13 – VGA & POWER CORD LOCATION

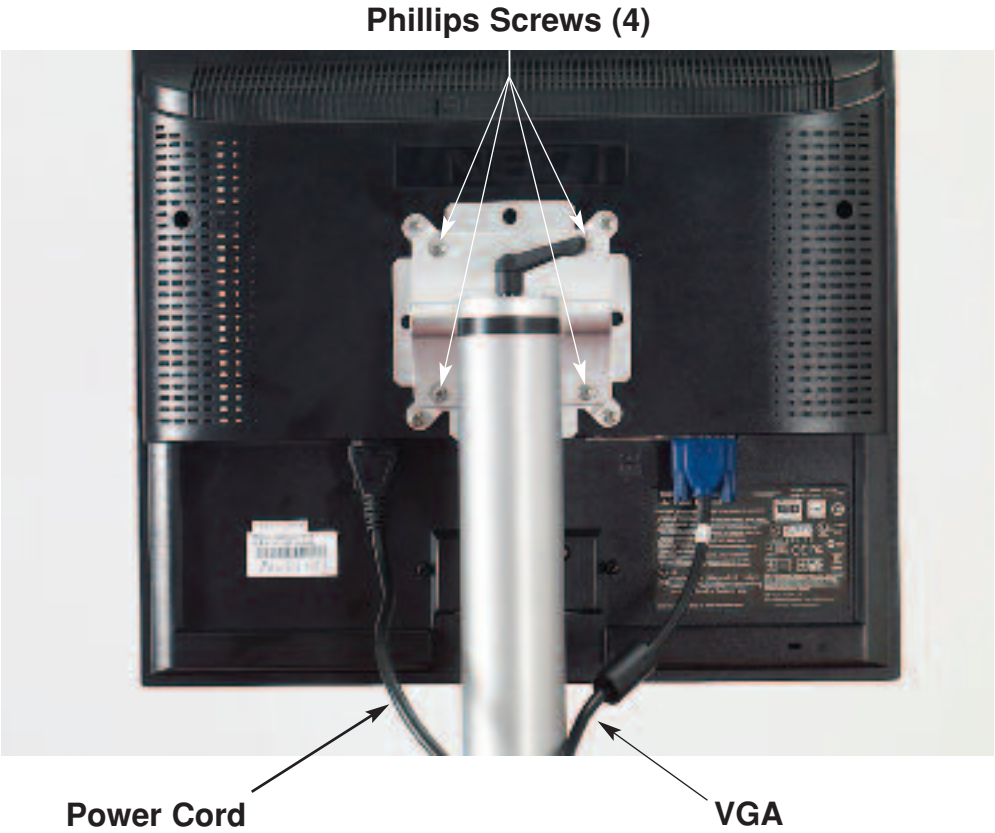

REMOVAL PROCEDURE

1. Remove input power.
2. Disconnect the power supply cord and VGA (blue) input cable from monitor. See Figure F.13.
3. Using a phillips screwdriver, remove two bottom monitor mounting screws. See Figure F.13.
4. Loosen the top two phillips screws and carefully separate monitor from pedestal.

Note: It is not necessary to completely remove the top two phillips screws unless a new monitor is required.

5. The monitor can now be removed.

Note: It is not necessary to remove the pedestal if just the monitor is to be replaced

6. Using a 7/16” wrench, remove the monitor pedestal mounting screws. Note washer placement upon removal. ***See Figure F.14.***
7. Remove pedestal.

Return to Section TOC
Return to Master TOC

MONITOR AND PEDESTAL REMOVAL AND REPLACEMENT PROCEDURE (continued)

FIGURE F.14 – PEDESTAL MOUNTING BOLTS

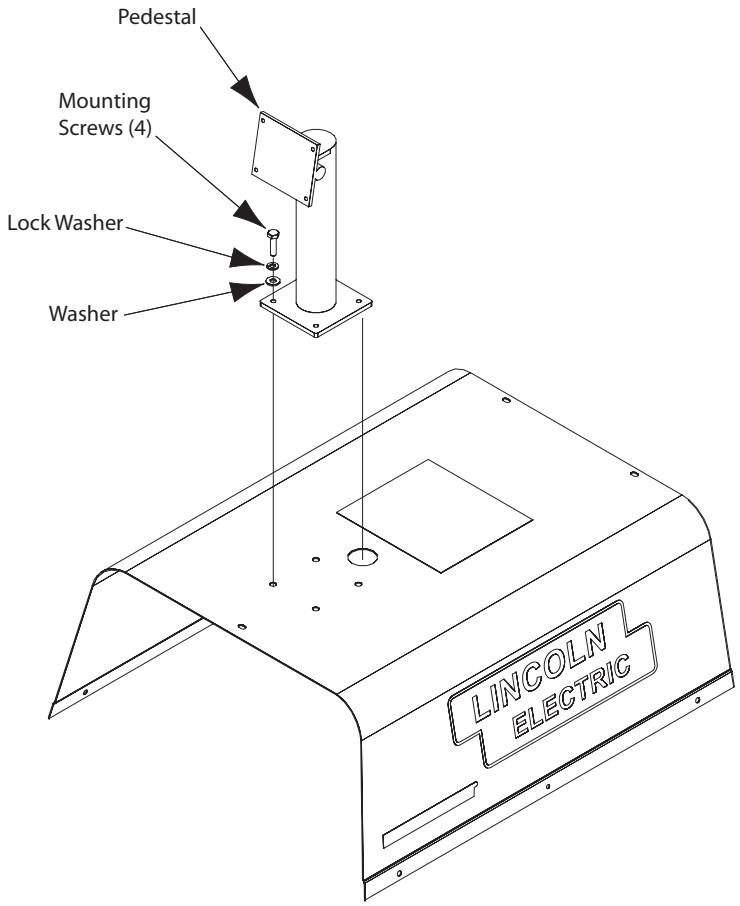

REPLACEMENT PROCEDURE

1. Install pedestal and secure using previously removed mounting screws and associated washers.
2. Loosely install previously removed top two screws into the new monitor.
3. Slide monitor onto pedestal and install bottom two screws previously removed.
4. Tighten all four phillips screws securing monitor.
5. Connect power supply cord and VGA cable previously removed. ***See Figure F.13.***
6. ***See Retest After Repair.***

Return to Section TOC
Return to Master TOC

NOTES

F-42

Return to Section TOC
Return to Master TOC
Return to Section TOC
Return to Master TOC
Return to Section TOC
Return to Master TOC
Return to Section TOC
Return to Master TOC

CASE COVER REMOVAL AND REPLACEMENT PROCEDURE

⚠ WARNING

Service and repair should be performed only by Lincoln Electric factory trained personnel. Unauthorized repairs performed on this equipment may result in danger to the technician or machine operator and will invalidate your factory warranty. For your safety and to avoid electrical shock, please observe all safety notes and precautions detailed throughout this manual.

If for any reason you do not understand the test procedures or are unable to perform the test/repairs safely, contact the Lincoln Electric Service Department for electrical troubleshooting assistance before you proceed. Call 1-888-935-3878.

TEST DESCRIPTION

This procedure will aid the technician in the removal and replacement of the case sheet metal covers.

MATERIALS NEEDED

3/8" Wrench

Return to Section TOC
Return to Master TOC

CASE COVER REMOVAL AND REPLACEMENT PROCEDURE (continued)

FIGURE F.15 – CASE COVERS

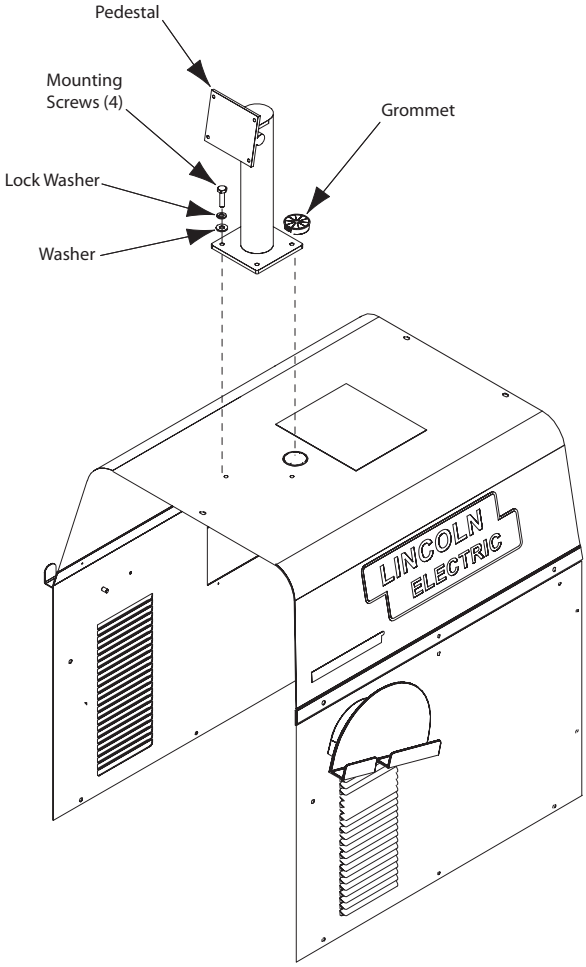

REMOVAL PROCEDURE

1. Remove input power.
2. Perform the ***Monitor and Pedestal Removal Procedure***.
3. Using 3/8" wrench, remove the nine screws securing the case roof.
4. Remove the black plastic grommet securing the VGA and monitor input cable to the roof. See Figure F.15.
5. Carefully remove roof from unit while negotiating wires and cables through the hole in the roof where grommet was removed.

COUPON DRAWER REMOVAL

1. Open drawer completely.
2. Push drawer-release tabs located underneath slides. Both tabs must be depressed. ***See Figure F.16.***
3. Pull drawer out and away from machine.
4. Using a 3/8" wrench, remove the seven screws securing the coupon drawer mounting frame to the case sides and back.
5. Carefully remove coupon drawer frame from unit.

RIGHT CASE SIDE REMOVAL

1. Carefully remove the VR GMAW/FCAW device from the holder.
2. Using a 3/8" wrench, remove the six screws securing the right case side.

LEFT CASE SIDE REMOVAL

1. Carefully remove the VR SMAW device from the holder.
2. Using a 3/8" wrench, remove the six screws securing the left case side.

Return to Section TOC
Return to Master TOC

CASE COVER REMOVAL AND REPLACEMENT PROCEDURE (continued)

FIGURE F.16 – DRAWER RELEASE TABS

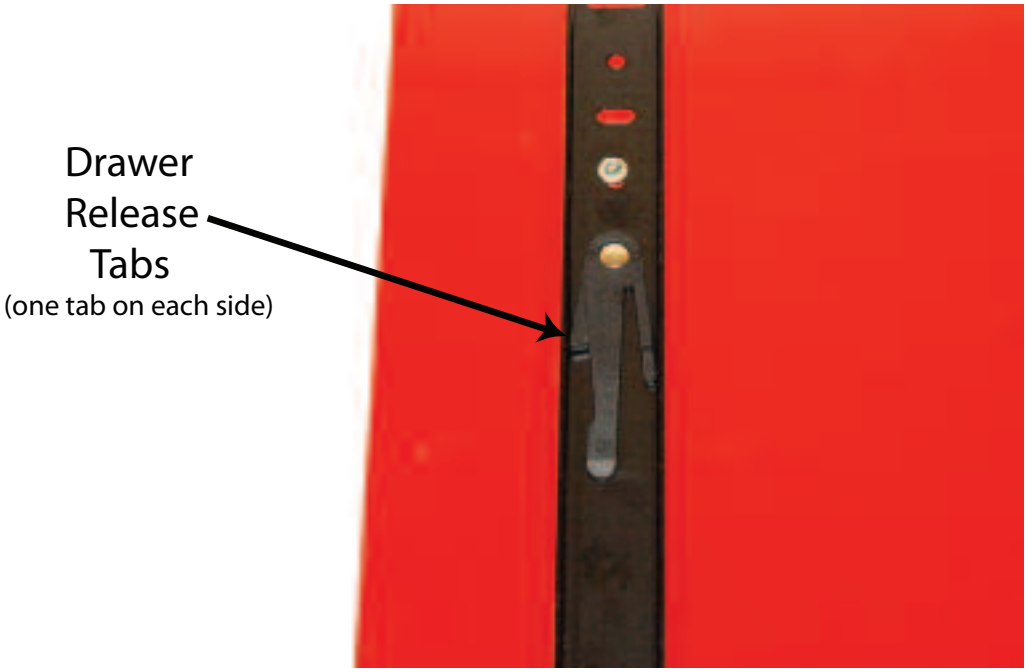

REPLACEMENT PROCEDURE

1. Replace left case side using previously removed screws.
2. Replace right case side using previously removed screws.
3. Install the coupon drawer mounting frame using the previously removed screws.
4. Install coupon drawer by lining up tracks on bottom of drawer with tracks on frame and push to close.
5. Carefully negotiate monitor leads through hole in case roof while setting in place.
6. Replace black plastic grommet previously removed.
6. Secure case roof using previously removed screws.
7. Perform the ***Monitor and Pedestal Replacement Procedure.***

Return to Section TOC
Return to Master TOC

NOTES

F-46

Return to Section TOC
Return to Master TOC
Return to Section TOC
Return to Master TOC
Return to Section TOC
Return to Master TOC
Return to Section TOC
Return to Master TOC

POLHEMUS MODULE REMOVAL AND REPLACEMENT PROCEDURE

⚠ WARNING

Service and repair should be performed only by Lincoln Electric factory trained personnel. Unauthorized repairs performed on this equipment may result in danger to the technician or machine operator and will invalidate your factory warranty. For your safety and to avoid electrical shock, please observe all safety notes and precautions detailed throughout this manual.

If for any reason you do not understand the test procedures or are unable to perform the test/repairs safely, contact the Lincoln Electric Service Department for electrical troubleshooting assistance before you proceed. Call 1-888-935-3878.

TEST DESCRIPTION

This procedure will aid the technician in the removal and replacement of the Polhemus Module.

MATERIALS NEEDED

3/8" Wrench
Hook & Loop Mounting Pads
Wiring Diagram

Return to Section TOC
Return to Master TOC

POLHEMUS MODULE REMOVAL AND REPLACEMENT PROCEDURE (continued)

FIGURE F.17 – POLHEMUS MODULE LOCATION

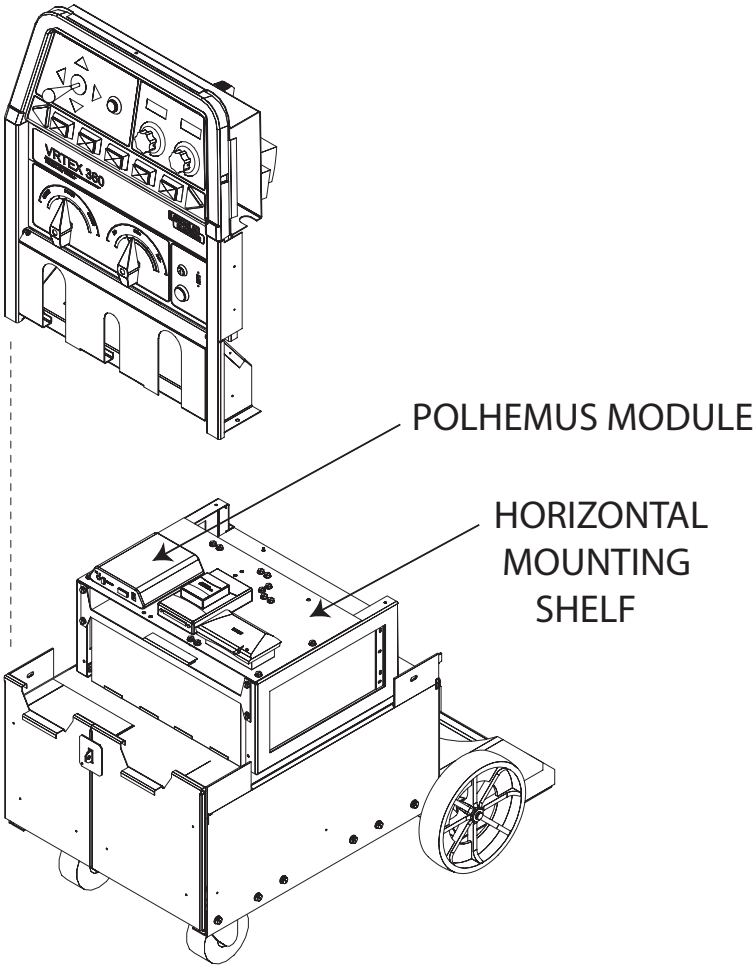

REMOVAL PROCEDURE

1. Remove input power.
2. Perform the ***Monitor and Pedestal Removal Procedure***.
3. Perform the ***Case Cover Removal Procedure***.
4. Locate the Polhemus Module. See Figure F.17.
5. Label all cables and connections for reassembly. See Wiring Diagram.
6. Remove the five associated cables connected to the Polhemus Module. Note and label the locations before disconnecting. See ***Figure F.18***.
7. Carefully remove Polhemus Module from horizontal mounting shelf. See Figure F.17.

NOTE: The Polhemus board is secured to the horizontal mounting shelf with Hook & Loop mounting pads.

Return to Section TOC
Return to Master TOC

POLHEMUS MODULE REMOVAL AND REPLACEMENT PROCEDURE (continued)

FIGURE F.18 – POLHEMUS (FRONT)

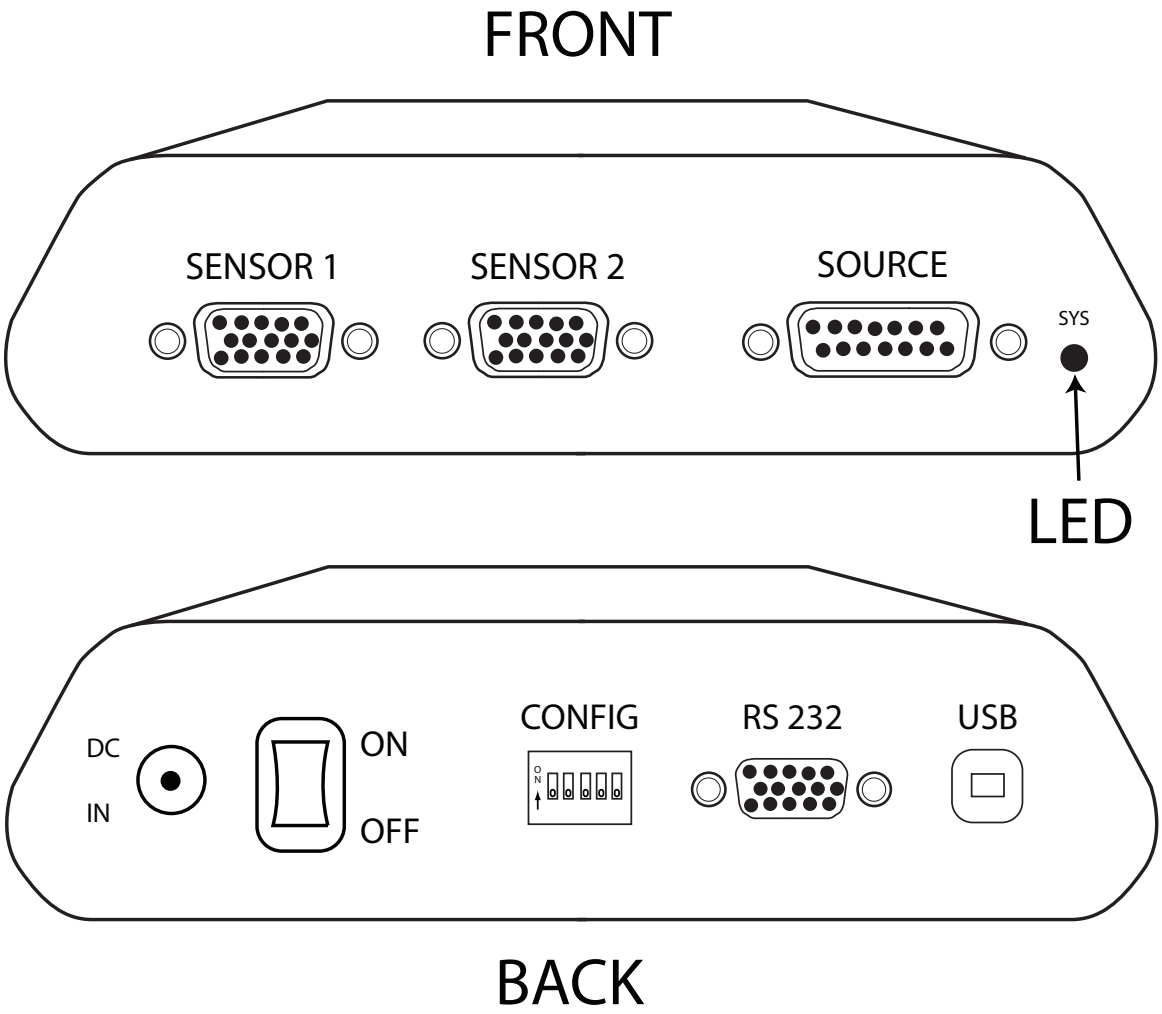

REPLACEMENT PROCEDURE

1. Install the new Polhemus Module using Hook & Loop mounting pads.
2. Connect the five previously removed cables to the Polhemus Module.

NOTE: Make sure that the ON/OFF switch at the rear of the Polhemus Module is in the "ON" position. Also make sure that the five pins on the dip switch are in the "OFF" position (down).

3. Perform ***Case Cover Replacement Procedure***.
4. Perform the ***Monitor and Pedestal Replacement Procedure***.
5. See ***Retest After Repair.***

Return to Section TOC
Return to Master TOC

NOTES

F-50

Return to Section TOC
Return to Section TOC
Return to Section TOC
Return to Section TOC
Return to Master TOC
Return to Master TOC
Return to Master TOC
Return to Master TOC

FMD CONTROLLER AND HELMET REMOVAL AND REPLACEMENT PROCEDURE

⚠ WARNING

Service and repair should be performed only by Lincoln Electric factory trained personnel. Unauthorized repairs performed on this equipment may result in danger to the technician or machine operator and will invalidate your factory warranty. For your safety and to avoid electrical shock, please observe all safety notes and precautions detailed throughout this manual.

If for any reason you do not understand the test procedures or are unable to perform the test/repairs safely, contact the Lincoln Electric Service Department for electrical troubleshooting assistance before you proceed. Call 1-888-935-3878.

TEST DESCRIPTION

This procedure will aid the technician in the removal and replacement of the FMD Controller and Helmet.

NOTE: These devices are replaced and sold together.

MATERIALS NEEDED

3/8" Wrench
Hook & Loop Mounting Pads
Wiring Diagram

Return to Section TOC
Return to Master TOC

FMD CONTROLLER AND HELMET REMOVAL AND REPLACEMENT PROCEDURE (continued)

FIGURE F.19 – FMD DEVICE LOCATION

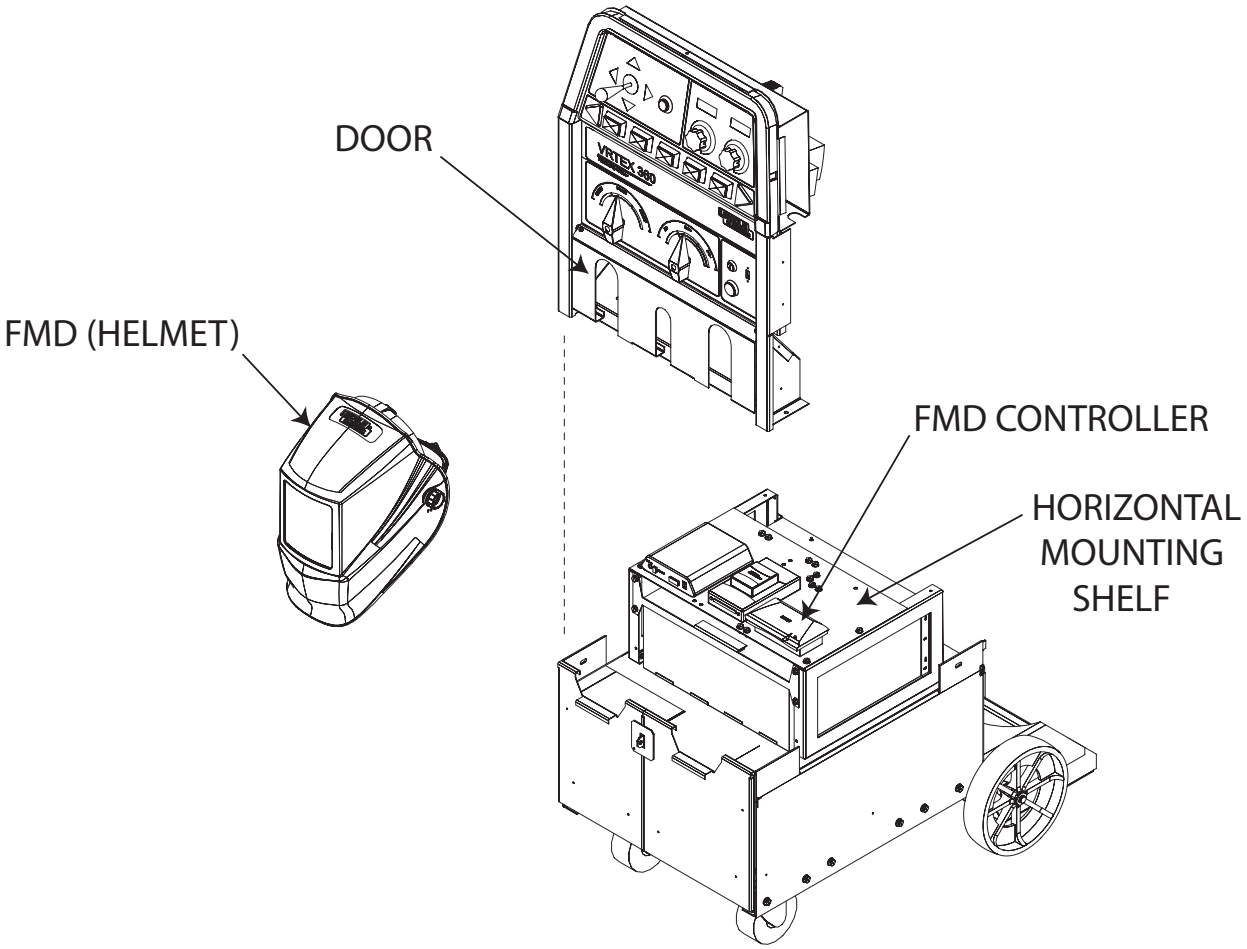

REMOVAL PROCEDURE

1. Remove input power.
2. Perform the ***Monitor and Pedestal Removal Procedure***.
3. Perform the ***Case Cover Removal Procedure***.
4. Locate the FMD Controller. See Figure F.19.
5. Label and disconnect associated leads and cables attached to the FMD Controller. See wiring diagram.
6. Lift door on front of machine. See Figure F.19.
7. Using a 3/8 inch wrench, remove the two screws securing the FMD Controller access plate exposing the access hole. ***See Figure F.20.***
8. Disconnect sensor #2 plug from the polhemus module. ***See Figure F.18.*** See wiring diagram.
9. Remove any necessary cable ties.
10. Remove strain relief devices from wires and save for replacement procedure. ***See Figure F.20.***
11. Carefully negotiate the FMD Controller and sensor #2 plug out through the access panel.

NOTE: The FMD Controller and Helmet are sold and replaced as one unit.

Return to Section TOC
Return to Master TOC

FMD CONTROLLER AND HELMET REMOVAL AND REPLACEMENT PROCEDURE (continued)

FIGURE F.20 – ACCESS PLATE

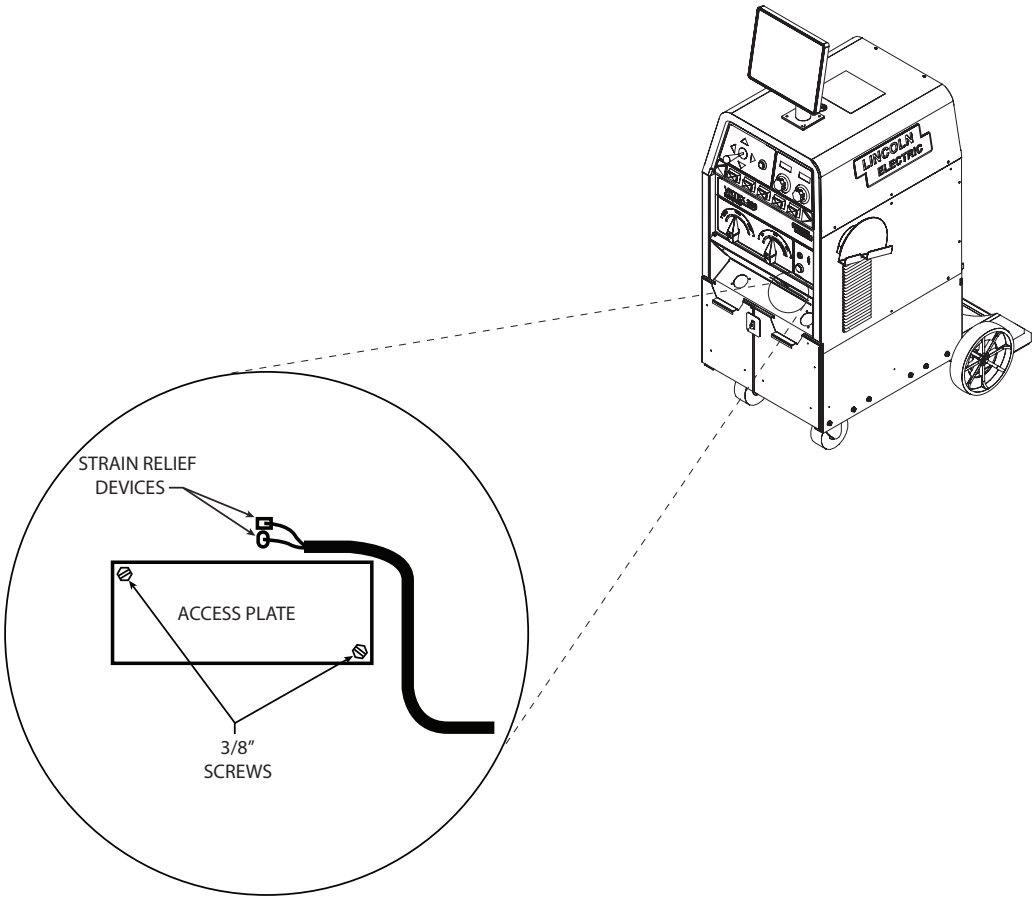

REPLACEMENT PROCEDURE

1. Replace FMD Controller and Helmet.
2. Carefully install the FMD Controller into its proper position.
3. Connect the previously removed plug into the FMD Controller. See wiring diagram.
4. Install any previously removed cable ties
5. Secure previously leads using the previously removed strain relief devices.
6. Secure the access plate.
7. Close door on front of machine.
8. Perform the ***Case Cover Replacement Procedure***.
9. Perform the ***Monitor and Pedestal Replacement Procedure***.
10. See ***Retest After Repair.***

Return to Section TOC
Return to Master TOC

NOTES

F-54

Return to Section TOC
Return to Master TOC
Return to Section TOC
Return to Master TOC
Return to Section TOC
Return to Master TOC
Return to Section TOC
Return to Master TOC

RELAY PC BOARD REMOVAL AND REPLACEMENT PROCEDURE

⚠ WARNING

Service and repair should be performed only by Lincoln Electric factory trained personnel. Unauthorized repairs performed on this equipment may result in danger to the technician or machine operator and will invalidate your factory warranty. For your safety and to avoid electrical shock, please observe all safety notes and precautions detailed throughout this manual.

If for any reason you do not understand the test procedures or are unable to perform the test/repairs safely, contact the Lincoln Electric Service Department for electrical troubleshooting assistance before you proceed. Call 1-888-935-3878.

TEST DESCRIPTION

This procedure will aid the technician in the removal and replacement of the Relay PC Board.

MATERIALS NEEDED

3/8" Wrench
Wiring Diagram

Return to Section TOC
Return to Master TOC

RELAY PC BOARD REMOVAL AND REPLACEMENT PROCEDURE (continued)

FIGURE F.21 – RELAY PC BOARD LOCATION

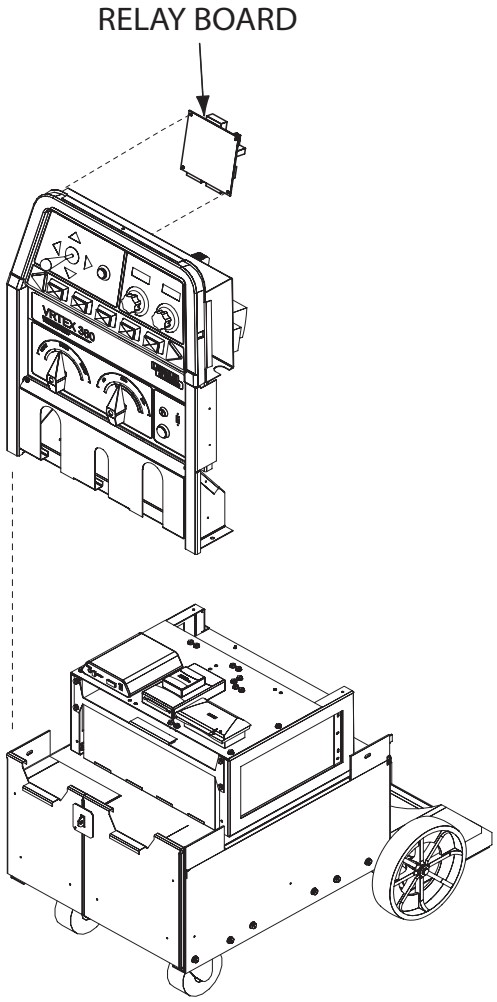

REMOVAL PROCEDURE

1. Remove input power.
2. Perform the ***Monitor and Pedestal Removal Procedure***.
3. Perform the ***Case Cover Removal Procedure***.
4. Locate the Relay PC Board. See Figure F.21.
5. Label and remove the three cables (J2, J3 & J4) from the relay board. ***See Figure F.22.***
6. Remove the 8-pin molex plug J1. ***See Figure F.22.***
7. Carefully remove the relay board from the four mounting stand-offs.

Return to Section TOC
Return to Master TOC

RELAY PC BOARD REMOVAL AND REPLACEMENT PROCEDURE (continued)

FIGURE F.22 – PLUG LOCATION

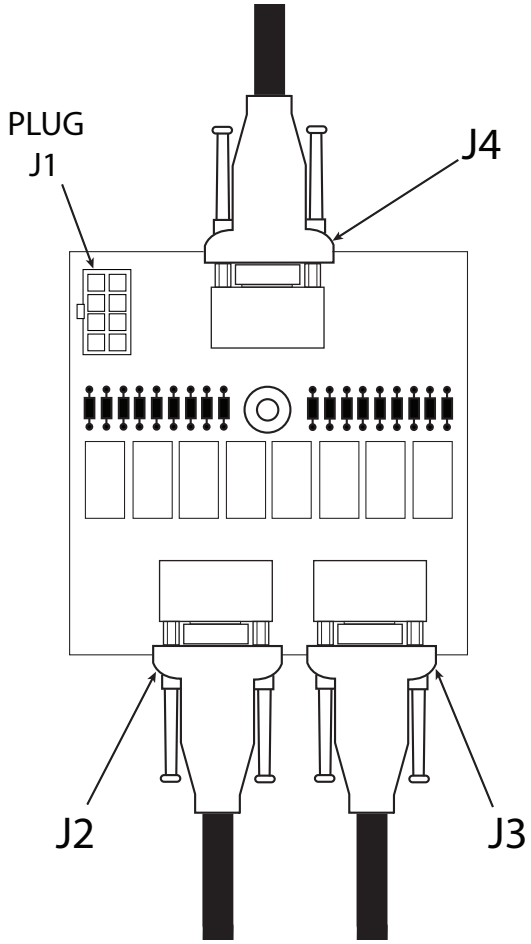

REPLACEMENT PROCEDURE

1. Replace the Relay PC Board.
2. Mount the board to the machine by carefully pressing the board onto the four mounting stand-offs.
3. Insert previously removed 8-pin molex plug J1.
4. Connect the three cables (J2, J3 & J4) previously removed.
5. Perform the ***Case Cover Replacement Procedure***.
6. Perform the ***Monitor and Pedestal Replacement Procedure***.
7. See ***Retest After Repair.***

Return to Section TOC
Return to Master TOC

NOTES

F-58

Return to Section TOC
Return to Master TOC
Return to Section TOC
Return to Master TOC
Return to Section TOC
Return to Master TOC
Return to Section TOC
Return to Master TOC

5VDC SUPPLY MODULE REMOVAL AND REPLACEMENT PROCEDURE

⚠ WARNING

Service and repair should be performed only by Lincoln Electric factory trained personnel. Unauthorized repairs performed on this equipment may result in danger to the technician or machine operator and will invalidate your factory warranty. For your safety and to avoid electrical shock, please observe all safety notes and precautions detailed throughout this manual.

If for any reason you do not understand the test procedures or are unable to perform the test/repairs safely, contact the Lincoln Electric Service Department for electrical troubleshooting assistance before you proceed. Call 1-888-935-3878.

TEST DESCRIPTION

This procedure will aid the technician in the removal and replacement of the 5VDC Supply Module.

MATERIALS NEEDED

Small Flathead Screwdriver

Return to Section TOC
Return to Master TOC

5VDC SUPPLY MODULE REMOVAL AND REPLACEMENT PROCEDURE (continued)

FIGURE F.23 – 5 VOLT SUPPLY LOCATION

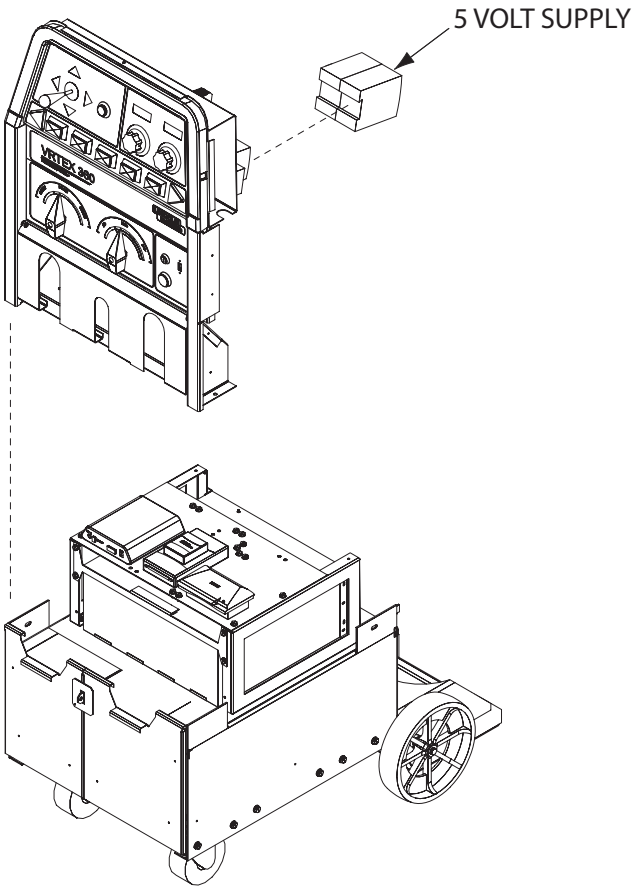

REMOVAL PROCEDURE

1. Remove input power.
2. Perform the ***Monitor and Pedestal Removal Procedure***.
3. Perform the ***Case Cover Removal Procedure***.
4. Locate the 5VDC Supply Module. See Figure F.23.

Note: There are two supply modules located next to each other. Make certain that you are removing the correct module.

5. Using a small flathead screwdriver, remove leads 102A (white), 103B (pink/red) and the green ground lead from the bottom of the Supply Module. ***See Figure F.24.***
6. Label and remove the positive and negative leads (81,81,50,50) from the top of the 5VDC Module using the small flathead screwdriver. ***See Figure F.24.***
7. Push down on the release tab and lift up to remove the 5VDC Supply Module from the DIN rail.

Return to Section TOC
Return to Master TOC

5VDC SUPPLY MODULE REMOVAL AND REPLACEMENT PROCEDURE (continued)

FIGURE F.24 – 5 VOLT SUPPLY LEAD LOCATIONS

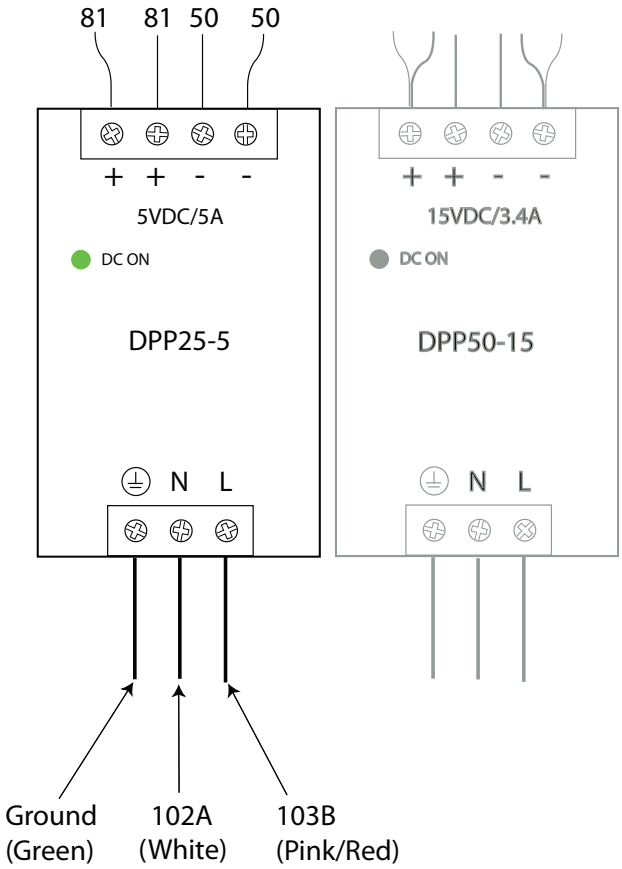

REPLACEMENT PROCEDURE

1. Replace the 5VDC Supply Module.
2. Secure the new Supply Module to the DIN rail.
3. Connect all previously removed leads to their proper locations on the Supply Module.
4. Perform the ***Case Cover Replacement Procedure***.
5. Perform the ***Monitor and Pedestal Replacement Procedure***.
6. See ***Retest After Repair.***

Return to Section TOC
Return to Master TOC

NOTES

F-62

Return to Section TOC
Return to Section TOC
Return to Section TOC
Return to Section TOC
Return to Master TOC
Return to Master TOC
Return to Master TOC
Return to Master TOC

12/15VDC SUPPLY MODULE REMOVAL AND REPLACEMENT PROCEDURE

⚠ WARNING

Service and repair should be performed only by Lincoln Electric factory trained personnel. Unauthorized repairs performed on this equipment may result in danger to the technician or machine operator and will invalidate your factory warranty. For your safety and to avoid electrical shock, please observe all safety notes and precautions detailed throughout this manual.

If for any reason you do not understand the test procedures or are unable to perform the test/repairs safely, contact the Lincoln Electric Service Department for electrical troubleshooting assistance before you proceed. Call 1-888-935-3878.

TEST DESCRIPTION

This procedure will aid the technician in the removal and replacement of the 12/15VDC Supply Module.

MATERIALS NEEDED

Small Flathead Screwdriver
Wiring Diagram

Return to Section TOC
Return to Master TOC

12/15VDC SUPPLY MODULE REMOVAL AND REPLACEMENT PROCEDURE (continued)

FIGURE F.25 – 12/15 VOLT SUPPLY MODULE LOCATION

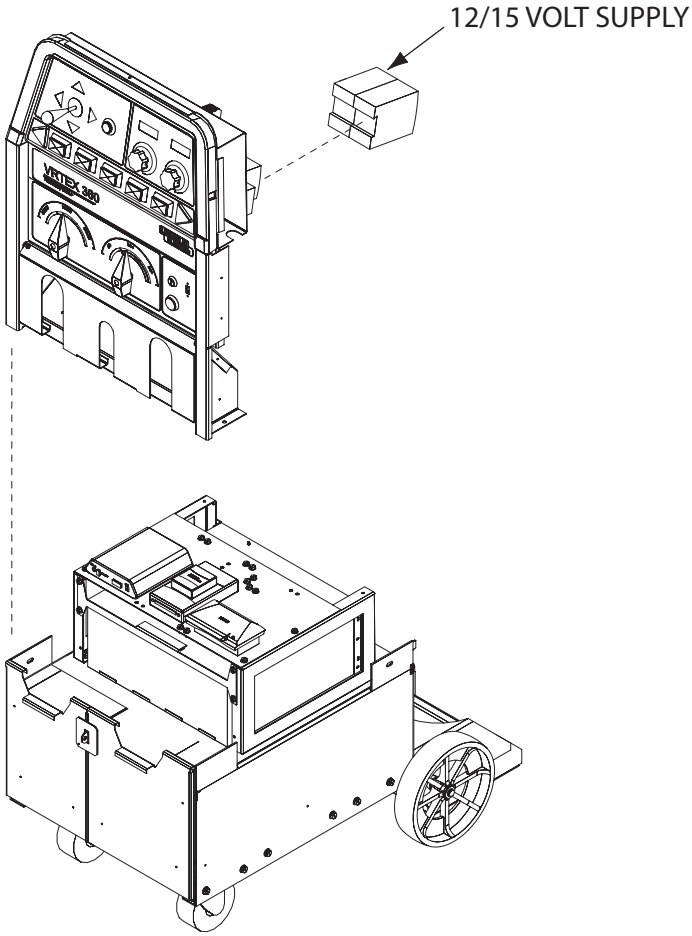

REMOVAL PROCEDURE

1. Remove input power.
2. Perform the ***Monitor and Pedestal Removal Procedure***.
3. Perform the ***Case Cover Removal Procedure***.
4. Locate the 12/15VDC Supply Module. See Figure F.25.

Note: There are two supply modules located next to each other. Make certain that you are removing the correct module.

5. Using a small flathead screwdriver, remove leads 102B (white), 103C (pink/red) and the green ground lead from the bottom of the 12/15VDC Supply Module. ***See Figure F.26.***
6. Label and remove the positive and negative leads (71, 71, 72, 72) from the top of the Supply Module using the small flathead screwdriver. ***See Figure F.26.***
7. Push down on the release tab and lift up to remove the 12/15VDC Supply Module from the DIN rail.

Return to Section TOC
Return to Master TOC

12/15VDC SUPPLY MODULE REMOVAL AND REPLACEMENT PROCEDURE (continued)

FIGURE F.26 – 12/15 VOLT SUPPLY LEAD LOCATIONS

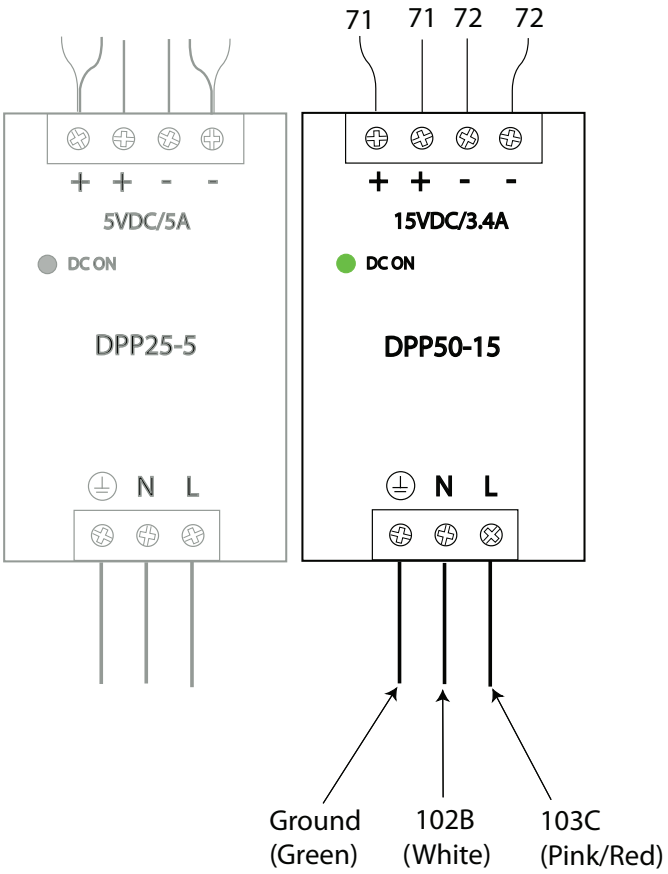

REPLACEMENT PROCEDURE

1. Replace the 12/15VDC Supply Module.
2. Secure the new Supply Module to the DIN rail.
3. Connect all previously removed leads to their proper locations on the Supply Module.
4. Perform the ***Case Cover Replacement Procedure***.
5. Perform the ***Monitor and Pedestal Replacement Procedure***.
6. See ***Retest After Repair.***

Return to Section TOC
Return to Master TOC

NOTES

F-66

Return to Section TOC
Return to Section TOC
Return to Section TOC
Return to Section TOC
Return to Master TOC
Return to Master TOC
Return to Master TOC
Return to Master TOC

ON BUTTON REMOVAL AND REPLACEMENT PROCEDURE

⚠ WARNING

Service and repair should be performed only by Lincoln Electric factory trained personnel. Unauthorized repairs performed on this equipment may result in danger to the technician or machine operator and will invalidate your factory warranty. For your safety and to avoid electrical shock, please observe all safety notes and precautions detailed throughout this manual.

If for any reason you do not understand the test procedures or are unable to perform the test/repairs safely, contact the Lincoln Electric Service Department for electrical troubleshooting assistance before you proceed. Call 1-888-935-3878.

TEST DESCRIPTION

This procedure will aid the technician in the removal and replacement of the ON Button.

MATERIALS NEEDED

Wiring Diagram

Return to Section TOC
Return to Master TOC

ON BUTTON REMOVAL AND REPLACEMENT PROCEDURE (continued)

FIGURE F.27 – ON BUTTON LOCATION

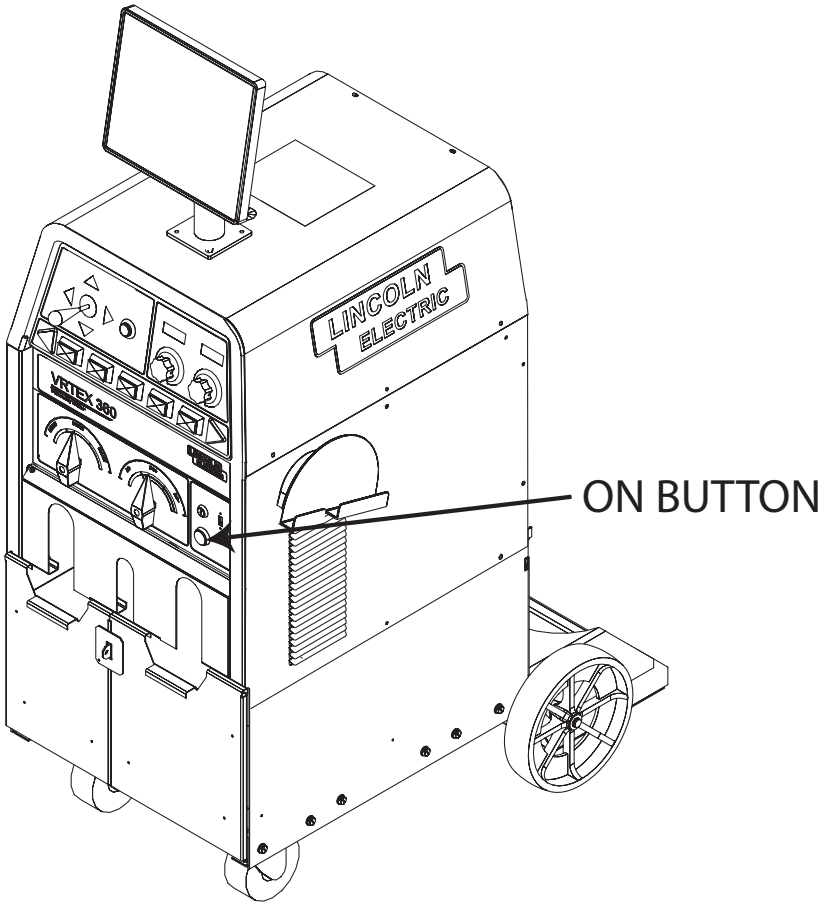

REMOVAL PROCEDURE

1. Remove input power.
2. Perform the ***Monitor and Pedestal Removal Procedure***.
3. Perform the ***Case Cover Removal Procedure***.
4. Locate the ON Button. See Figure F.27.
5. Label and remove the four associated leads (101B, 103A, 90, 91) from the ON Button. See wiring diagram.
6. Remove switch from push button by pushing in and turning a ¼ turn counter clockwise.
7. If necessary, remove the nut and push button assembly from front panel.

Return to Section TOC
Return to Master TOC

ON BUTTON REMOVAL AND REPLACEMENT PROCEDURE (continued)

FIGURE F.28 – ON SWITCH LEADS

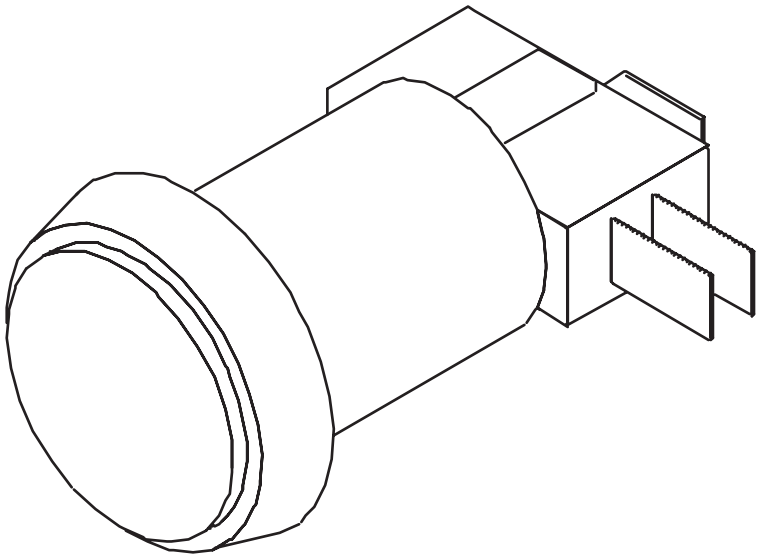

REPLACEMENT PROCEDURE

1. Replace the ON Button.
2. Install the ON Button by pushing in and turning a ¼ turn clockwise.
3. Connect the previously removed leads to the ON Button.
4. Perform the ***Case Cover Replacement Procedure***.
5. Perform the ***Monitor and Pedestal Replacement Procedure***.
6. See ***Retest After Repair.***

Return to Section TOC
Return to Master TOC

NOTES

F-70

Return to Section TOC
Return to Section TOC
Return to Section TOC
Return to Section TOC
Return to Master TOC
Return to Master TOC
Return to Master TOC
Return to Master TOC

INTERFACE MODULE DIGITAL I/O REMOVAL AND REPLACEMENT PROCEDURE

⚠ WARNING

Service and repair should be performed only by Lincoln Electric factory trained personnel. Unauthorized repairs performed on this equipment may result in danger to the technician or machine operator and will invalidate your factory warranty. For your safety and to avoid electrical shock, please observe all safety notes and precautions detailed throughout this manual.

If for any reason you do not understand the test procedures or are unable to perform the test/repairs safely, contact the Lincoln Electric Service Department for electrical troubleshooting assistance before you proceed. Call 1-888-935-3878.

TEST DESCRIPTION

This procedure will aid the technician in the removal and replacement of the Interface Module Digital I/O.

MATERIALS NEEDED

USB Mouse
USB Keyboard
Hook & Loop Mounting Pads
Phillips Screwdriver
Wiring Diagram

Return to Section TOC
Return to Master TOC

INTERFACE MODULE DIGITAL I/O REMOVAL AND REPLACEMENT PROCEDURE (continued)

FIGURE F.29 – INTERFACE MODULE DIGITAL I/O LOCATION

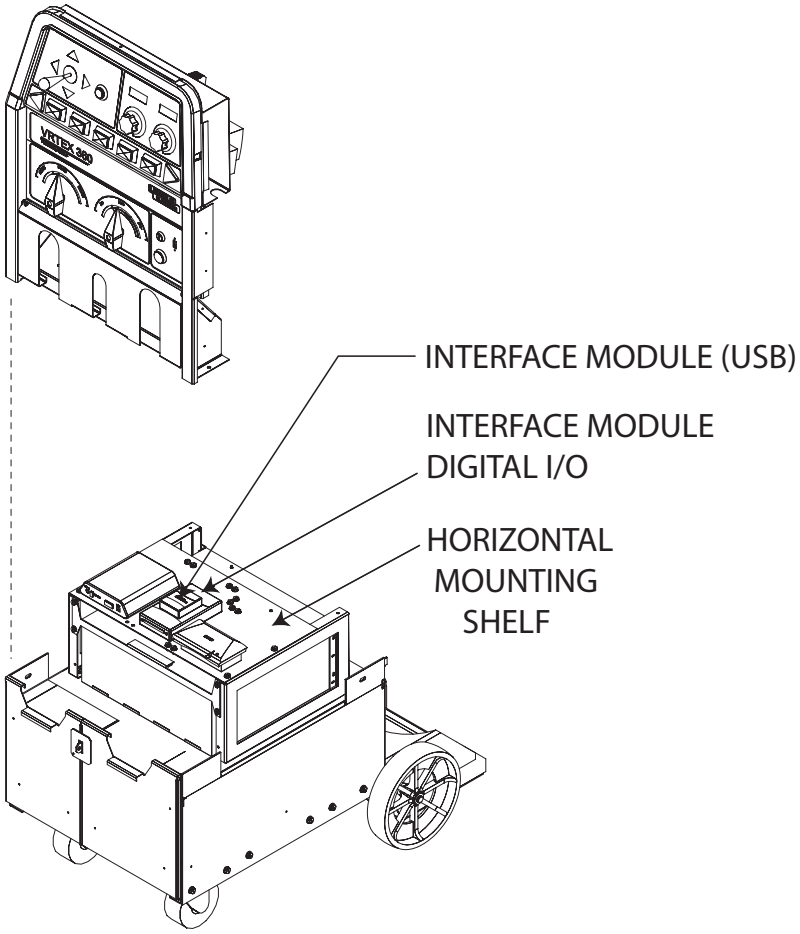

REMOVAL PROCEDURE

1. Remove input power.
2. Perform the ***Monitor and Pedestal Removal Procedure***.
3. Perform the ***Case Cover Removal Procedure***.
4. Locate the Interface Module Digital I/O. See Figure F.29.
5. Carefully remove the interface module (USB) from the top of the Interface Module Digital I/O.

NOTE: The interface module digital (USB) is secured to the Interface Module Digital I/O with Hook & Loop mounting pads.

6. Disconnect the large ribbon cable. ***See Figure F.30.***
7. Label and disconnect the USB cable. ***See Figure F.30.***
8. Using a phillips screwdriver, remove the single screw securing the Interface Module Digital I/O to the horizontal mounting shelf. ***See Figure F.30.***

Return to Section TOC
Return to Master TOC

INTERFACE MODULE DIGITAL I/O
REMOVAL AND REPLACEMENT PROCEDURE (continued)

FIGURE F.30 – PLUG LOCATIONS

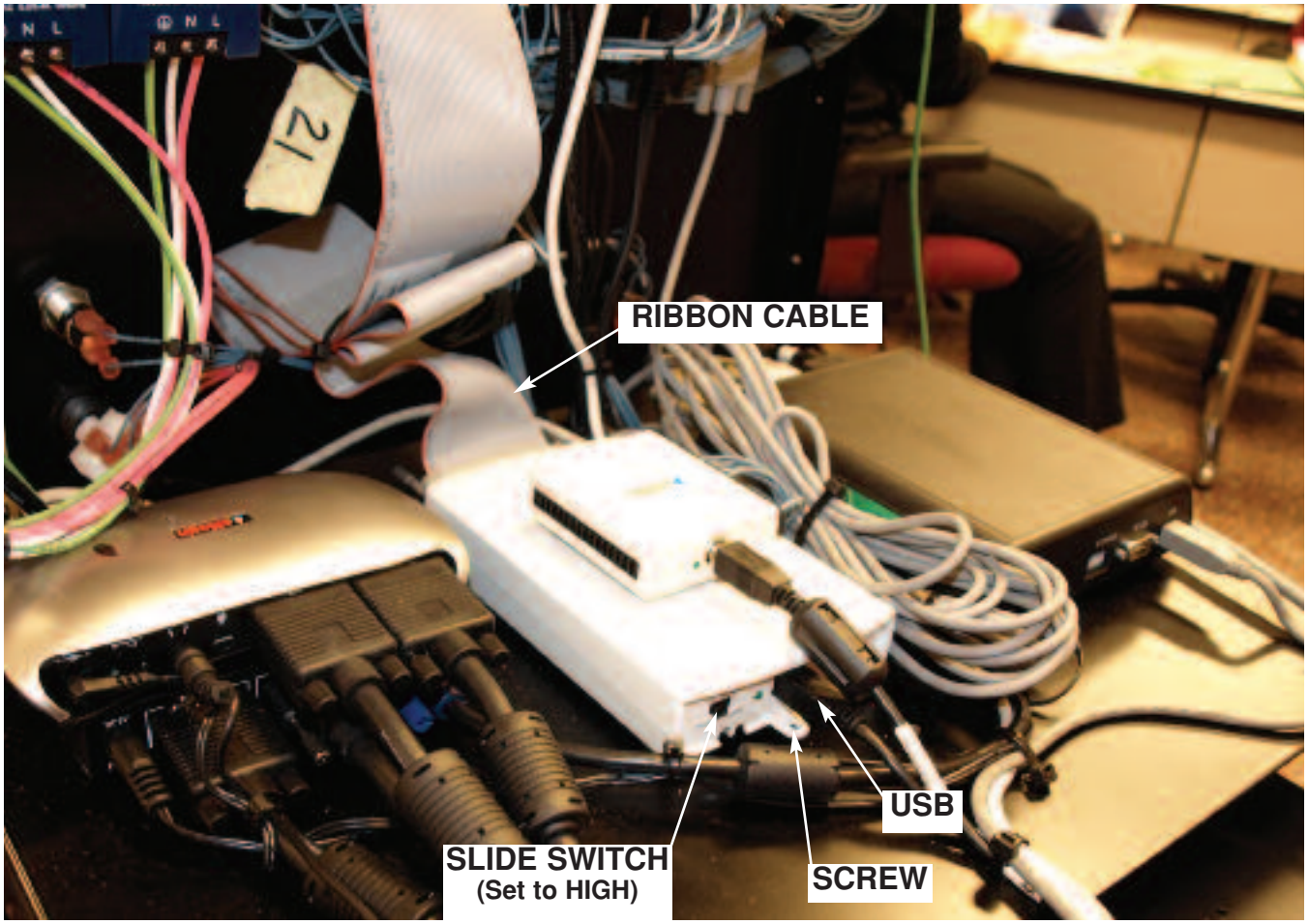

REPLACEMENT PROCEDURE

1. Install the new Interface Module Digital I/O and secure using the previously removed screw.
2. Connect the previously removed USB cable.
3. Connect the large ribbon cable previously removed.

NOTE: Make sure that the slide switch at the rear of the Module is in the "HIGH" position.

4. Connect USB mouse and USB keyboard to an available/open USB port on CPU.
5. Turn on the input power to the machine.
6. Wait for "Shortcut to Start-up Sim". ***See Figure F.31.***
7. Click "x" to close screen and cancel loading. At this point, a basic computer screen desktop will appear.
8. Computer may show a "found new hardware" screen. Click "next". Then click on "connect to internet".

NOTE: Internet connection is not necessary.

9. Click on "Install the software automatically" and then click "next".
10. After the driver is installed successfully, click "finished".

Return to Section TOC
Return to Master TOC

INTERFACE MODULE DIGITAL I/O
REMOVAL AND REPLACEMENT PROCEDURE (continued)

FIGURE F.31 – SHORTCUT TO START-UP SIM SCREEN SHOT

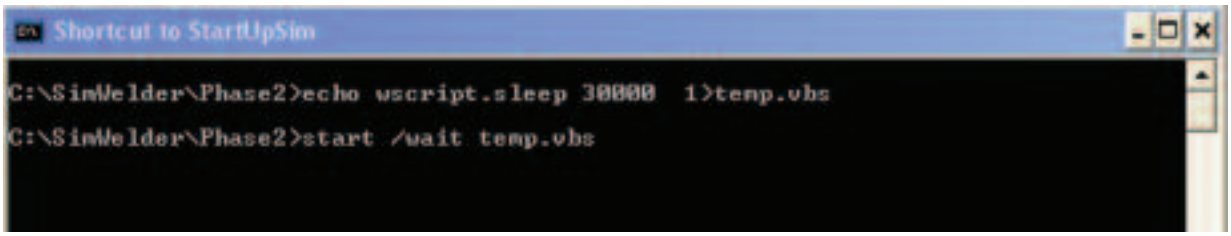

11. Click on the following in order:
    - Start
    - All Programs
    - National Instruments
    - Measurement and Automation

      See Figure F.32.
    - Devices and Interfaces (click "+")
    - NI-DAQmx Devices

    Right click: NI USB 6509; "Dev1"

    Left click: Delete

    Left click: NI USB 6509; "Dev2"

    Right click: Rename to ("Dev1")
12. Press "Enter".
13. Exit out of program.
14. Shut down the VRTEX™ 360 via a normal CPU shutdown. Click:
    - Start
    - Turn off computer
    - Turn off
15. Remove input power after CPU has completely shut down.
16. Disconnect the USB keyboard and mouse.
17. Perform ***Case Cover Replacement Procedure***.
18. Perform the ***Monitor and Pedestal Replacement Procedure***.
19. See ***Retest After Repair.***

FIGURE F.32 – NATIONAL INSTRUMENTS

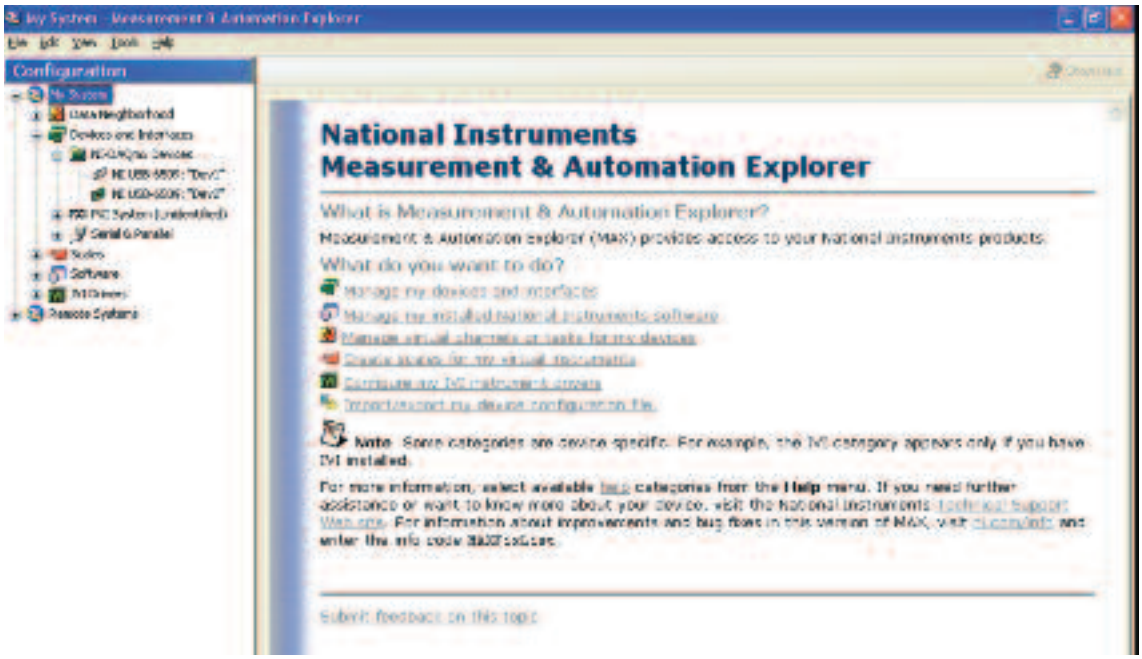

Return to Section TOC
Return to Master TOC

INTERFACE MODULE (USB) REMOVAL AND REPLACEMENT PROCEDURE

⚠ WARNING

Service and repair should be performed only by Lincoln Electric factory trained personnel. Unauthorized repairs performed on this equipment may result in danger to the technician or machine operator and will invalidate your factory warranty. For your safety and to avoid electrical shock, please observe all safety notes and precautions detailed throughout this manual.

If for any reason you do not understand the test procedures or are unable to perform the test/repairs safely, contact the Lincoln Electric Service Department for electrical troubleshooting assistance before you proceed. Call 1-888-935-3878.

TEST DESCRIPTION

This procedure will aid the technician in the removal and replacement of the Interface Module (USB).

MATERIALS NEEDED

USB Mouse
USB Keyboard
Hook & Loop Mounting Pads
Wiring Diagram

Return to Section TOC
Return to Master TOC

INTERFACE MODULE (USB)
REMOVAL AND REPLACEMENT PROCEDURE (continued)

FIGURE F.33 – INTERFACE MODULE (USB) LOCATION

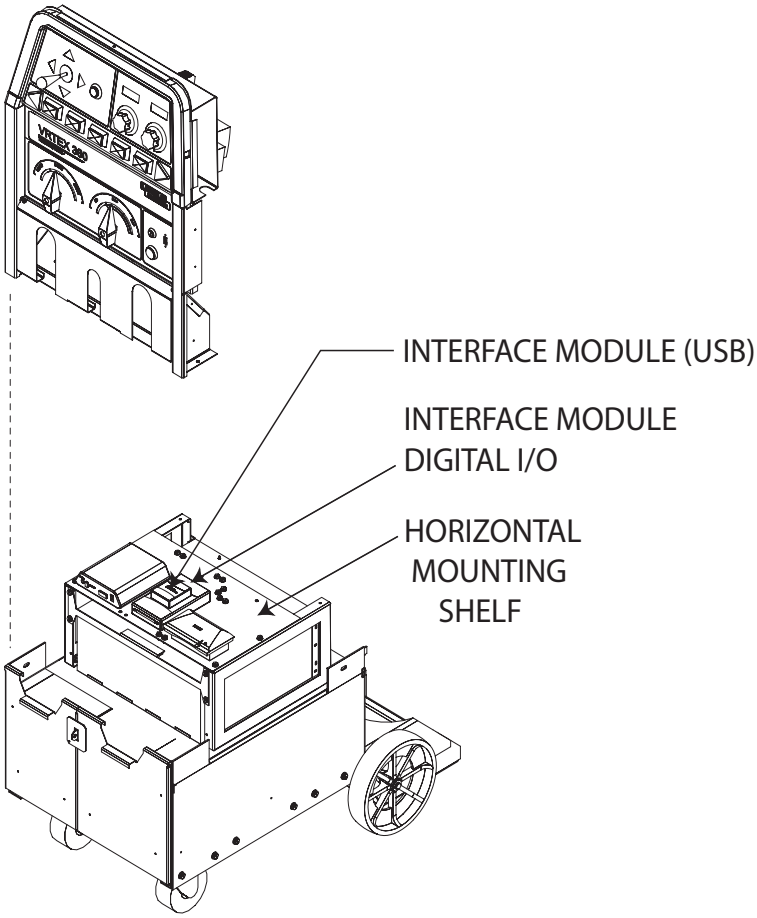

REMOVAL PROCEDURE

1. Remove input power.
2. Perform the ***Monitor and Pedestal Removal Procedure***.
3. Perform the ***Case Cover Removal Procedure***.
4. Locate the Interface Module (USB). See Figure F.33.
5. Label and disconnect the USB cable. ***See Figure F.34.***
6. Unplug the 16-pin terminal strip from the Interface Module (USB). ***See Figure F.34.***
7. Carefully remove the Interface Module (USB) from the top of the interface module digital I/O.

NOTE: The Interface Module (USB) is secured to the interface module digital I/O with Hook & Loop mounting pads.

Return to Section TOC
Return to Master TOC

INTERFACE MODULE (USB)
REMOVAL AND REPLACEMENT PROCEDURE (continued)

FIGURE F.34 – PLUG & TERMINAL STRIP LOCATION

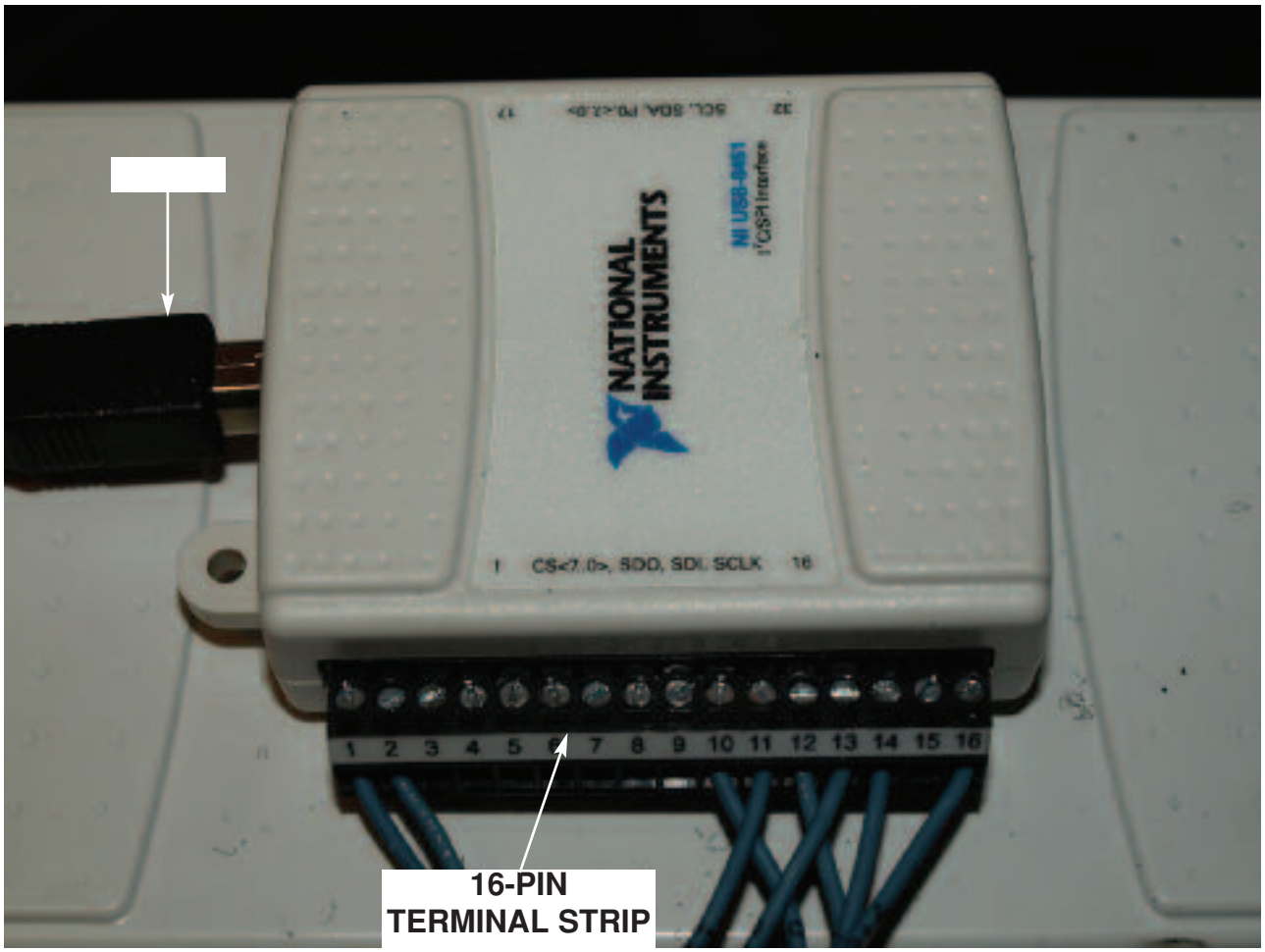

REPLACEMENT PROCEDURE

1. Install the new Interface Module (USB) using Hook & Loop mounting pads.
2. Install the 16-pin terminal strip previously removed.

NOTE: The terminal strip must be plugged into the side marked 1 thru 16 (NOT 17 thru 32) on the Interface Module (USB).

3. Connect the previously removed USB cable.
4. Connect USB mouse and USB keyboard to an available/open USB port on CPU.
5. Turn on the input power to the machine.
6. Wait for “Shortcut to Start-up Sim”. ***See Figure F.35.***
7. Press “x” to cancel loading. At this point, a basic computer screen desktop will appear.
8. Computer may show a “found new hardware” screen. Click “next”. Then click on “connect to internet”.

NOTE: Internet connection is not necessary.

9. Click on “Install the software automatically” and then click “next”.
10. After the driver is installed successfully, click “finished”.

Return to Section TOC
Return to Master TOC

INTERFACE MODULE DIGITAL (USB) REMOVAL AND REPLACEMENT PROCEDURE (continued)

FIGURE F.35 – SHORTCUT TO START-UP SIM SCREEN SHOT

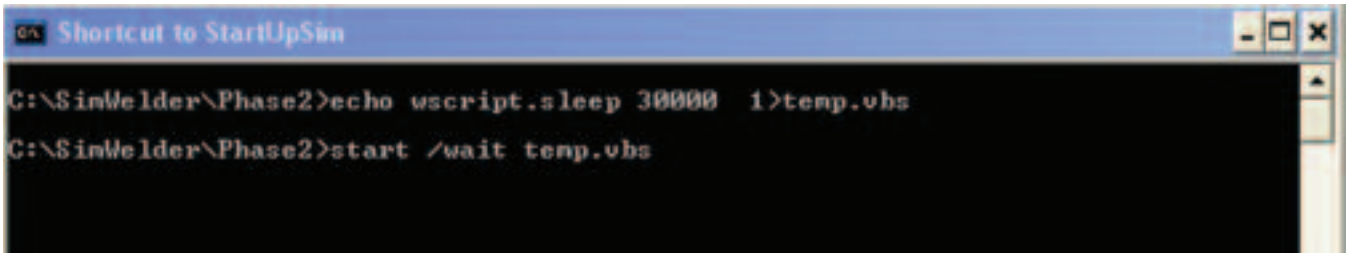

11. Click on the following in order:
    - Start
    - All Programs
    - National Instruments
    - Measurement and Automation

    See Figure F.36

    - Devices and Interfaces (click "+")
    - USB Devices
    - Tools
    - NI-Visa
    - Visa Options
    - Aliases
    - Clear all Aliases
    - OK
    - Close out Screen
    - YES (to save)
12. At this point, a basic computer screen desktop will appear.
13. Click on the following in order:
    - Start
    - All Programs
    - National Instruments
    - Measurement and Automation
    - Devices and Interfaces (click "+")
    - USB Devices (click "+")
    - USB 0……
14. In the box labeled "Visa Alias" on my system, type these letters: **LECSPI** (in CAPS)
15. Save and close out screen.
16. Shut down the VRTEX™ 360 via a normal CPU shutdown. Click:
    - Start
    - Turn off computer
    - Turn off
17. Remove input power after CPU has completely shut down.
18. Disconnect the USB keyboard and mouse.
19. Perform ***Case Cover Replacement Procedure***.
20. Perform the ***Monitor and Pedestal Replacement Procedure***.
21. See ***Retest After Repair.***

Return to Section TOC
Return to Master TOC

INTERFACE MODULE DIGITAL (USB)
REMOVAL AND REPLACEMENT PROCEDURE (continued)

FIGURE F.36 – MEASUREMENTS & AUTOMATION

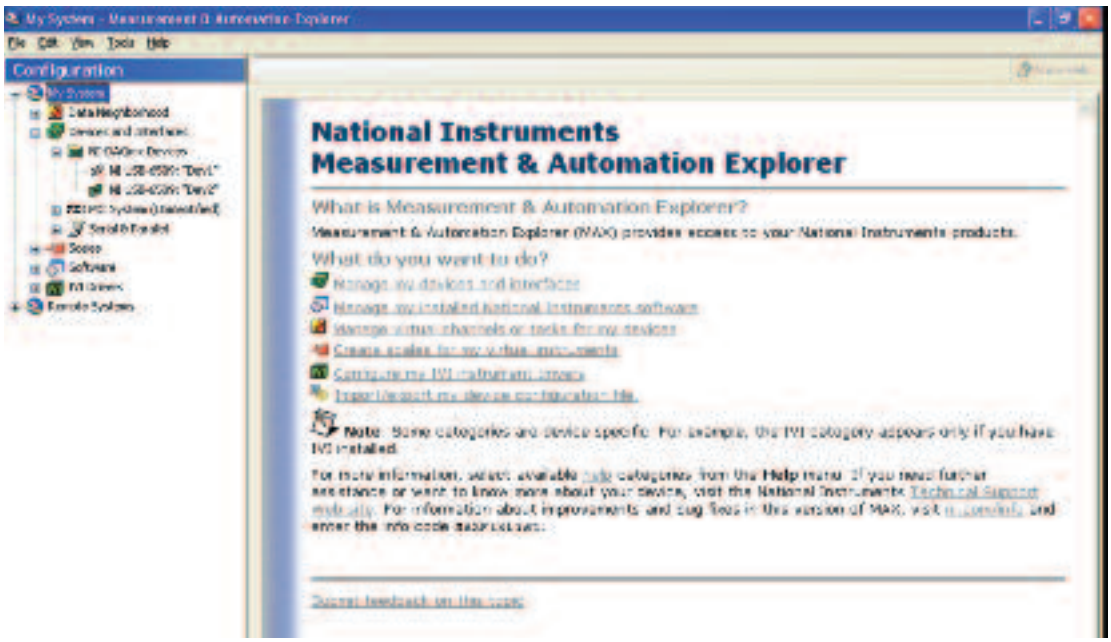

Return to Section TOC
Return to Master TOC

NOTES

F-80

Return to Section TOC
Return to Master TOC
Return to Section TOC
Return to Master TOC
Return to Section TOC
Return to Master TOC
Return to Section TOC
Return to Master TOC

DISPLAY BOARD REMOVAL AND REPLACEMENT PROCEDURE

⚠ WARNING

Service and repair should be performed only by Lincoln Electric factory trained personnel. Unauthorized repairs performed on this equipment may result in danger to the technician or machine operator and will invalidate your factory warranty. For your safety and to avoid electrical shock, please observe all safety notes and precautions detailed throughout this manual.

If for any reason you do not understand the test procedures or are unable to perform the test/repairs safely, contact the Lincoln Electric Service Department for electrical troubleshooting assistance before you proceed. Call 1-888-935-3878.

TEST DESCRIPTION

This procedure will aid the technician in the removal and replacement of the Display Board.

MATERIALS NEEDED

3/8" Wrench
Wiring Diagram

Return to Section TOC
Return to Master TOC

DISPLAY BOARD
REMOVAL AND REPLACEMENT PROCEDURE (continued)

FIGURE F.37 – DISPLAY LED BOARD LOCATION

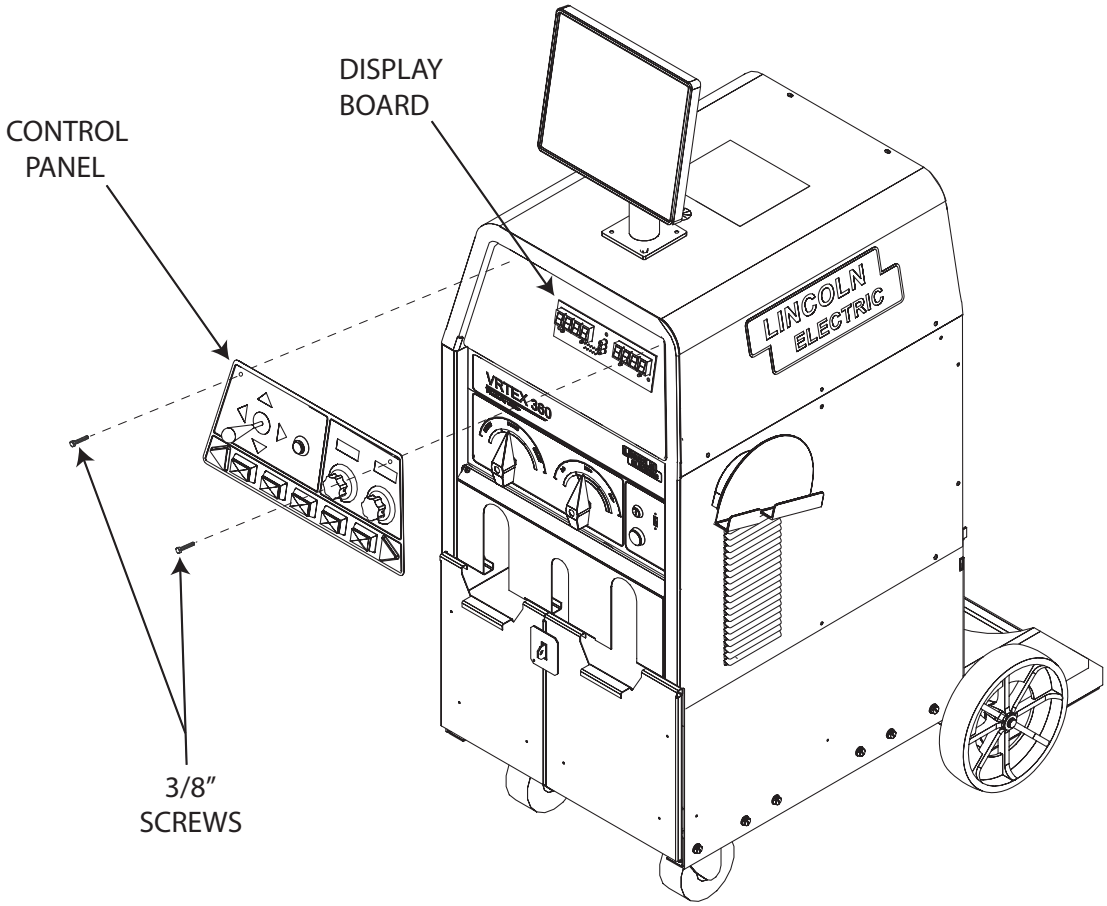

REMOVAL PROCEDURE

1. Remove input power.
2. Using the 3/8" wrench, remove the two screws from the top of the control panel. See Figure F.37.
3. Carefully lower the control panel.
4. Locate the Display Board. See Figure F.37.
5. Remove plug J37 from the display board. ***See Figure F.38.***
6. Carefully remove the Display Board from the three mounting stand-offs.

Return to Section TOC
Return to Master TOC

DISPLAY BOARD
REMOVAL AND REPLACEMENT PROCEDURE (continued)

FIGURE F.38 – DISPLAY LED BOARD PLUG LOCATION

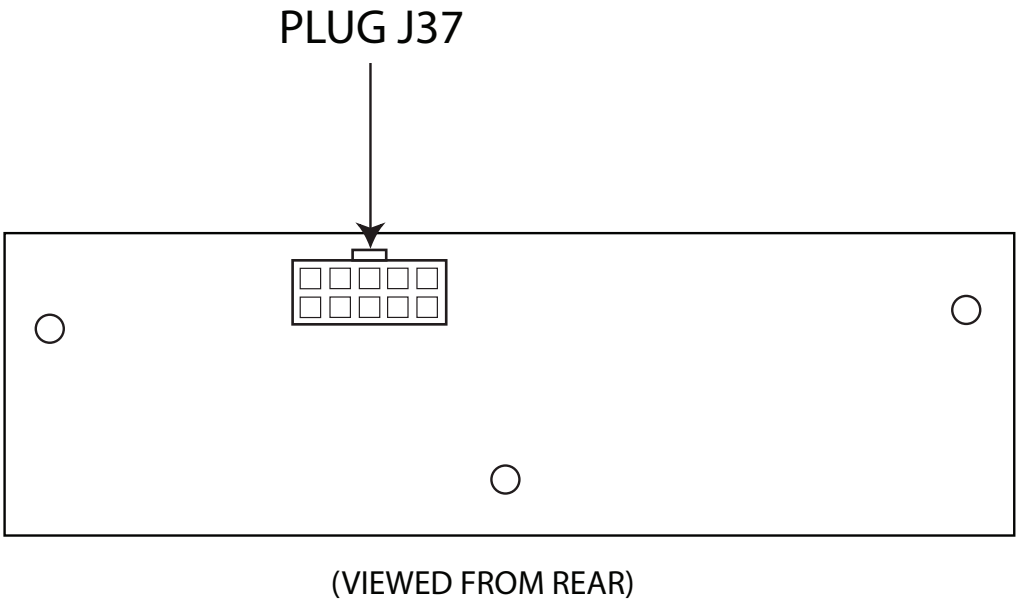

REPLACEMENT PROCEDURE

1. Install the new Display Board onto the three mounting stand-offs.
2. Replace plug J37 previously removed from the Display Board.
3. Close the control panel.
4. Install the two 3/8” screws previously removed from the top of the control panel.
5. Turn on input power.
6. See the ***Retest After Repair.***

Return to Section TOC
Return to Master TOC

NOTES

F-84

Return to Section TOC
Return to Master TOC
Return to Section TOC
Return to Master TOC
Return to Section TOC
Return to Master TOC
Return to Section TOC
Return to Master TOC

MOTOR CONTROL BOARD REMOVAL AND REPLACEMENT PROCEDURE

⚠ WARNING

Service and repair should be performed only by Lincoln Electric factory trained personnel. Unauthorized repairs performed on this equipment may result in danger to the technician or machine operator and will invalidate your factory warranty. For your safety and to avoid electrical shock, please observe all safety notes and precautions detailed throughout this manual.

If for any reason you do not understand the test procedures or are unable to perform the test/repairs safely, contact the Lincoln Electric Service Department for electrical troubleshooting assistance before you proceed. Call 1-888-935-3878.

TEST DESCRIPTION

This procedure will aid the technician in the removal and replacement of the Motor Control Board.

MATERIALS NEEDED

5mm Wrench
Small Flathead Screwdriver

Return to Section TOC
Return to Master TOC

MOTOR CONTROL BOARD
REMOVAL AND REPLACEMENT PROCEDURE (continued)

FIGURE F.39 – MOTOR CONTROL BOARD LOCATION

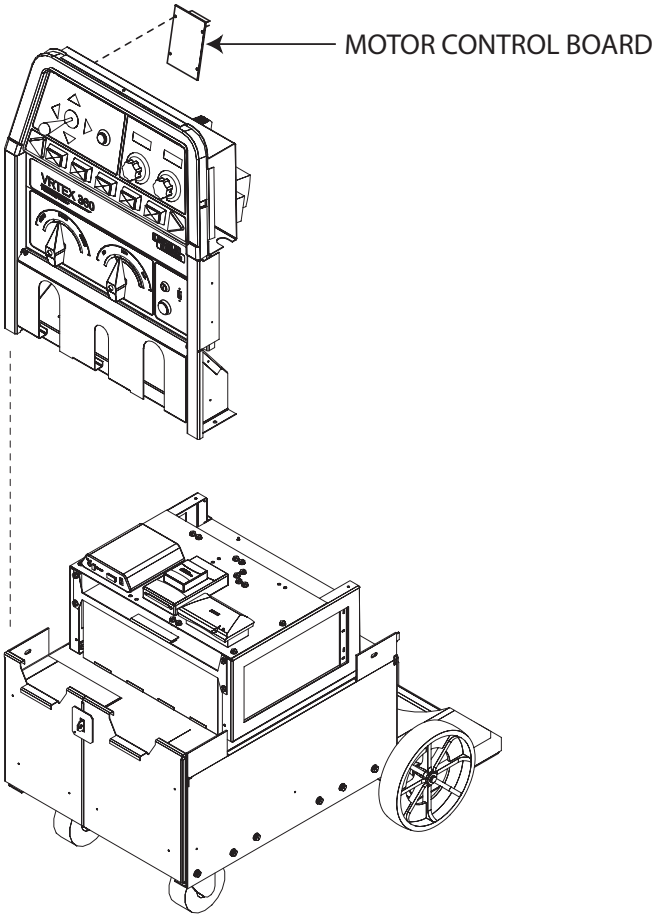

REMOVAL PROCEDURE

1. Remove input power.
2. Perform the ***Monitor and Pedestal Removal Procedure***.
3. Perform the ***Case Cover Removal Procedure***.
4. Locate the Motor Control Board. See Figure F.39.
5. Label all leads and associated terminals for reassembly.
6. Using the small flathead screwdriver, remove the 6 leads from the bottom terminal strip. ***See Figure F.40.*** See the Wiring Diagram.
7. Using the small flathead screwdriver, remove the three leads (50W, 20, 18) from the top terminal strip on the Motor Control Board. ***See Figure F.40.*** See Wiring Diagram.
8. Using a 5mm wrench, remove the four mounting nuts, bolts and spacers from the corners of the Motor Control Board. Note spacer positions for reassembly.

Return to Section TOC
Return to Master TOC

MOTOR CONTROL BOARD
REMOVAL AND REPLACEMENT PROCEDURE (continued)

FIGURE F.40 – CONTROL BOARD LEAD LOCATION

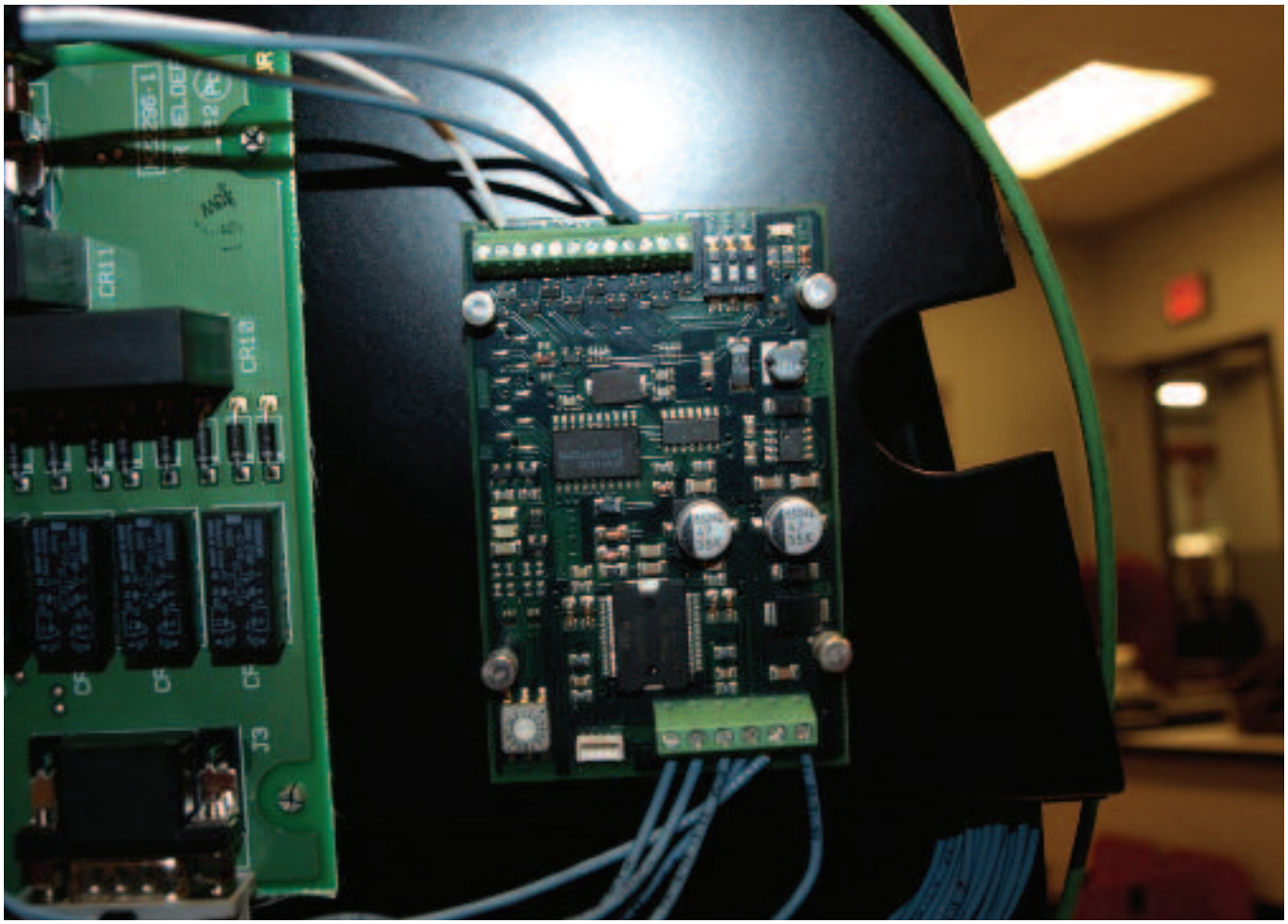

REPLACEMENT PROCEDURE

1. Install the new Motor Control Board using the previously removed nuts, bolts and spacers.
2. Connect all previously removed leads to their proper terminals. See wiring diagram.
3. Perform ***Case Cover Replacement Procedure***.
4. Perform the ***Monitor and Pedestal Replacement Procedure***.
5. See the ***Retest After Repair.***

Return to Section TOC
Return to Master TOC

NOTES

F-88

Return to Section TOC
Return to Master TOC
Return to Section TOC
Return to Master TOC
Return to Section TOC
Return to Master TOC
Return to Section TOC
Return to Master TOC

VR SMAW (STICK) DEVICE REMOVAL AND REPLACEMENT PROCEDURE

⚠ WARNING

Service and repair should be performed only by Lincoln Electric factory trained personnel. Unauthorized repairs performed on this equipment may result in danger to the technician or machine operator and will invalidate your factory warranty. For your safety and to avoid electrical shock, please observe all safety notes and precautions detailed throughout this manual.

If for any reason you do not understand the test procedures or are unable to perform the test/repairs safely, contact the Lincoln Electric Service Department for electrical troubleshooting assistance before you proceed. Call 1-888-935-3878.

TEST DESCRIPTION

This procedure will aid the technician in the removal and replacement of the VR SMAW Device.

MATERIALS NEEDED

3/8" wrench

Return to Section TOC
Return to Master TOC

VR SMAW (STICK) DEVICE
REMOVAL AND REPLACEMENT PROCEDURE (continued)

FIGURE F.41 – VR SMAW DEVICE LOCATION

REMOVAL PROCEDURE

1. Remove input power.
2. Perform the ***Monitor and Pedestal Removal Procedure***.
3. Perform the ***Case Cover Removal Procedure***.
4. Locate the VR SMAW Device. See Figure F.41.
5. Disconnect plug J3 from the relay board. ***See Figure F.22.***
6. Using the 3/8" wrench, remove the two screws holding the sheet metal strain relief to the front panel. ***See Figure F.42.***
7. Locate and disconnect the 16 pin molex style cable splice. See wiring diagram.

Return to Section TOC
Return to Master TOC

VR SMAW (STICK) DEVICE
REMOVAL AND REPLACEMENT PROCEDURE (continued)

FIGURE F.42 – STRAIN RELIEF

REPLACEMENT PROCEDURE

1. Install the new VR SMAW Device by replacing the two screws securing the sheet metal strain relief to the front panel.
2. Connect plug J3 to the relay board.
3. Reconnect the 16 pin molex cable splice.
4. Turn on input power.
5. Perform ***Case Cover Replacement Procedure***.
6. Perform the ***Monitor and Pedestal Replacement Procedure***.
7. See the ***Retest After Repair.***

Return to Section TOC
Return to Master TOC

NOTES

F-92

Return to Section TOC
Return to Master TOC
Return to Section TOC
Return to Master TOC
Return to Section TOC
Return to Master TOC
Return to Section TOC
Return to Master TOC

VR GMAW/FCAW (MIG) DEVICE REMOVAL AND REPLACEMENT PROCEDURE

⚠ WARNING

Service and repair should be performed only by Lincoln Electric factory trained personnel. Unauthorized repairs performed on this equipment may result in danger to the technician or machine operator and will invalidate your factory warranty. For your safety and to avoid electrical shock, please observe all safety notes and precautions detailed throughout this manual.

If for any reason you do not understand the test procedures or are unable to perform the test/repairs safely, contact the Lincoln Electric Service Department for electrical troubleshooting assistance before you proceed. Call 1-888-935-3878.

TEST DESCRIPTION

This procedure will aid the technician in the removal and replacement of the VR GMAW/FCAW Device.

MATERIALS NEEDED

3/8" wrench
Wiring

Return to Section TOC
Return to Master TOC

VR GMAW/FCAW (MIG) DEVICE
REMOVAL AND REPLACEMENT PROCEDURE (continued)

FIGURE F.43 – VR GMAW/FCAW DEVICE LOCATION

REMOVAL PROCEDURE

1. Remove input power.
2. Perform the ***Monitor and Pedestal Removal Procedure***.
3. Perform the ***Case Cover Removal Procedure***.
4. Locate the VR GMAW/FCAW Device. See Figure F.43.
5. Using the 3/8” wrench, remove the two screws holding the sheet metal strain relief to the front panel. ***See Figure F.44.***
6. Locate the VGA cable splice (audio style connector) and disconnect. See wiring diagram.
7. Disconnect VGA cable splice “Y-adapter”. Remove cable ties as necessary.

Return to Section TOC
Return to Master TOC

VR GMAW/FCAW (MIG) DEVICE
REMOVAL AND REPLACEMENT PROCEDURE (continued)

FIGURE F.44 – STRAIN RELIEF

REPLACEMENT PROCEDURE

1. Install the new VR GMAW/FCAW Device by replacing the two screws securing the sheet metal strain relief to the front panel.
2. Reconnect previously removed VGA cables, “Y- adapter” and audio style connector.
3. Perform ***Case Cover Replacement Procedure***.
4. Perform the ***Monitor and Pedestal Replacement Procedure***.
5. See the ***Retest After Repair.***

Return to Section TOC
Return to Master TOC

NOTES

F-96

Return to Section TOC
Return to Section TOC
Return to Section TOC
Return to Section TOC
Return to Master TOC
Return to Master TOC
Return to Master TOC
Return to Master TOC

VGA SPLITTER REMOVAL AND REPLACEMENT PROCEDURE

⚠ WARNING

Service and repair should be performed only by Lincoln Electric factory trained personnel. Unauthorized repairs performed on this equipment may result in danger to the technician or machine operator and will invalidate your factory warranty. For your safety and to avoid electrical shock, please observe all safety notes and precautions detailed throughout this manual.

If for any reason you do not understand the test procedures or are unable to perform the test/repairs safely, contact the Lincoln Electric Service Department for electrical troubleshooting assistance before you proceed. Call 1-888-935-3878.

TEST DESCRIPTION

This procedure will aid the technician in the removal and replacement of the VGA Splitter.

MATERIALS NEEDED

3/8" Wrench
Hook & Loop Mounting Pads
Wiring Diagram

Return to Section TOC
Return to Master TOC

VGA SPLITTER REMOVAL AND REPLACEMENT PROCEDURE (continued)

FIGURE F.45 – VGA SPLITTER LOCATION

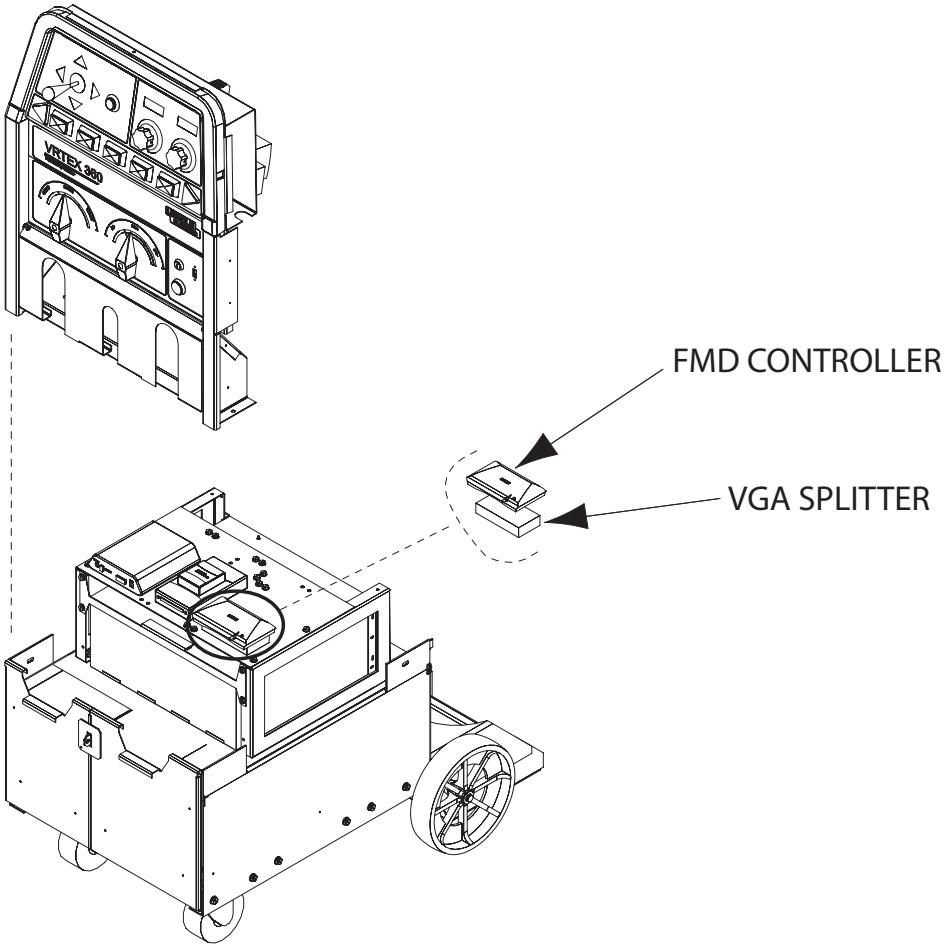

REMOVAL PROCEDURE

1. Remove input power.
2. Perform the ***Monitor and Pedestal Removal Procedure***.
3. Perform the ***Case Cover Removal Procedure***.
4. Locate the VGA Splitter. See Figure F.45.
5. To gain access to the VGA Splitter, carefully lift and move the FMD controller aside.
6. Label and remove the four cables connected to the VGA Splitter. ***See Figure F.46.***
7. Remove the VGA Splitter Module from the horizontal mounting shelf.

NOTE: The VGA Splitter is secured to the horizontal mounting shelf with Hook & Loop mounting pads.

Return to Section TOC
Return to Master TOC

VGA SPLITTER REMOVAL AND REPLACEMENT PROCEDURE (continued)

FIGURE F.46 – VGA SPLITTER LEAD LOCATION

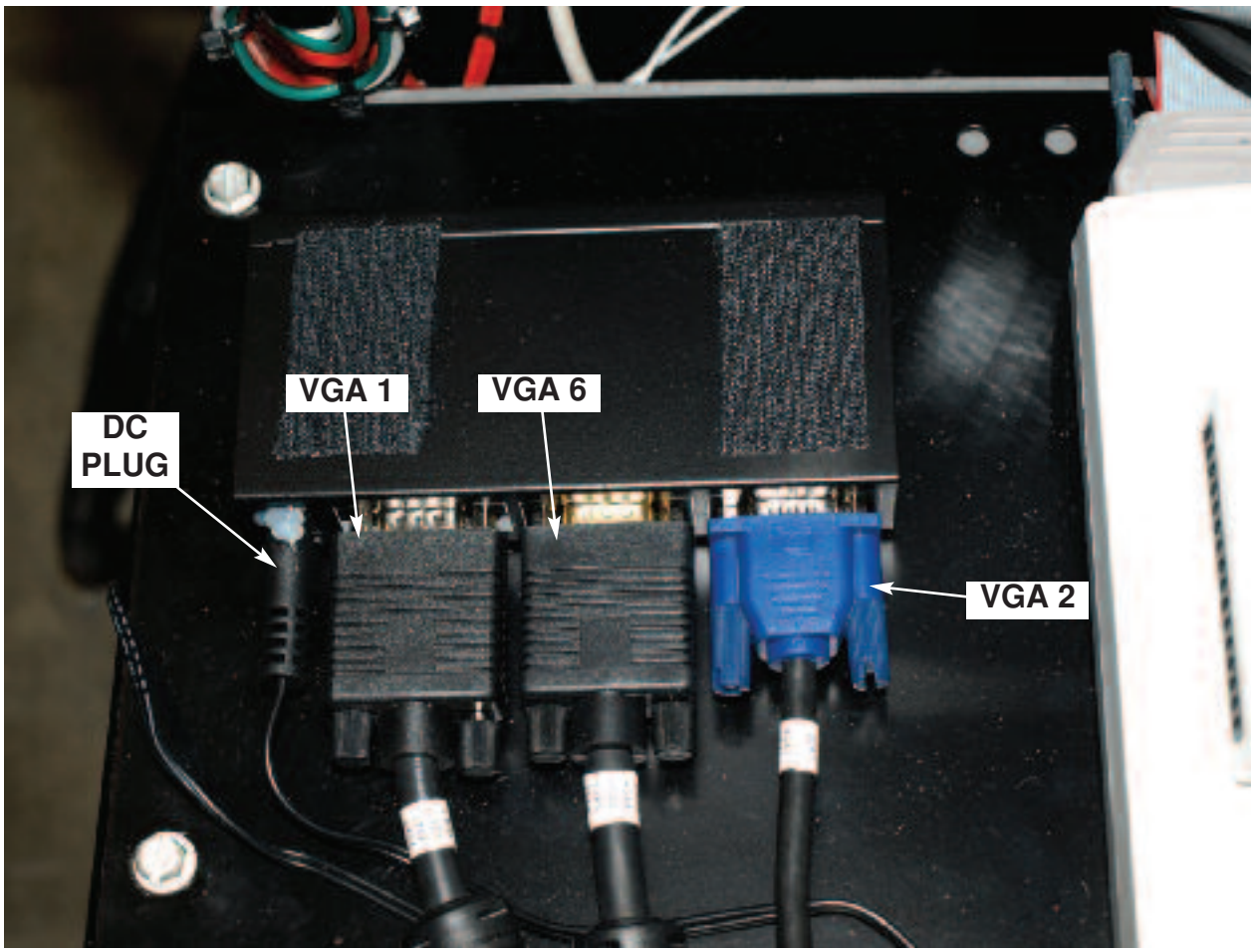

REPLACEMENT PROCEDURE

1. Install the new VGA Splitter onto the horizontal mounting shelf using Hook & Loop mounting pads.
2. Connect the four cables previously removed. See wiring diagram.
3. Attach the FMD controller to the VGA Splitter using Hook & Loop mounting pads.
4. Perform ***Case Cover Replacement Procedure***.
5. Perform the ***Monitor and Pedestal Replacement Procedure***.
6. Turn on input power
7. See the ***Retest After Repair.***

Return to Section TOC
Return to Master TOC

NOTES

F-100

Return to Section TOC
Return to Section TOC
Return to Section TOC
Return to Section TOC
Return to Master TOC
Return to Master TOC
Return to Master TOC
Return to Master TOC

TABLE SWING ARM REMOVAL AND REPLACEMENT PROCEDURE

⚠ WARNING

Service and repair should be performed only by Lincoln Electric factory trained personnel. Unauthorized repairs performed on this equipment may result in danger to the technician or machine operator and will invalidate your factory warranty. For your safety and to avoid electrical shock, please observe all safety notes and precautions detailed throughout this manual.

If for any reason you do not understand the test procedures or are unable to perform the test/repairs safely, contact the Lincoln Electric Service Department for electrical troubleshooting assistance before you proceed. Call 1-888-935-3878.

TEST DESCRIPTION

This procedure will aid the technician in the removal and replacement of the Table Swing Arm.

MATERIALS NEEDED

Wiring Diagram

Return to Section TOC
Return to Master TOC

TABLE SWING ARM
REMOVAL AND REPLACEMENT PROCEDURE (continued)

FIGURE F.47 – "SOURCE' CABLE CONNECTED TO POLHEMUS MODULE

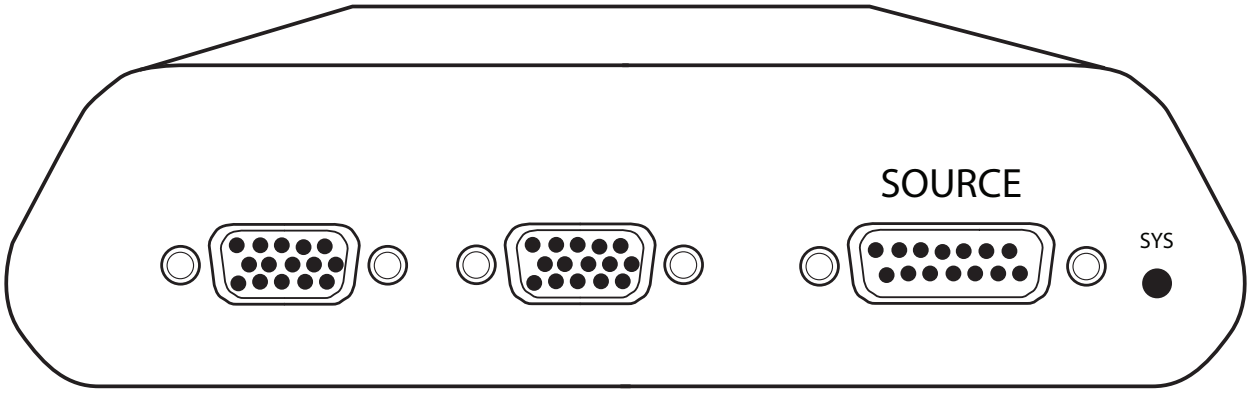

REMOVAL PROCEDURE

1. Remove input power.
2. Perform the ***Monitor and Pedestal Removal Procedure***.
3. Perform the ***Case Cover Removal Procedure***.
4. Remove any coupons that are inserted into the swing arm.
5. Disconnect the cable labeled "SOURCE" from the polhemus module. See Figure F.47.
6. Remove the strain relief from the Table Swing Arm cable at the rear of the machine. ***See Figure F.48.***
7. Remove any cable ties.
8. Carefully slide the Table Swing Arm off of the top of the table mounting post.
9. Remove the plastic grommet from 1¾ " access hole in case back. ***See Figure F.48.***
10. Remove the Table Swing Arm cable through the case back via the 1¾" access hole.

Return to Section TOC
Return to Master TOC

TABLE SWING ARM
REMOVAL AND REPLACEMENT PROCEDURE (continued)

FIGURE F.48 – CASE BACK (REAR)

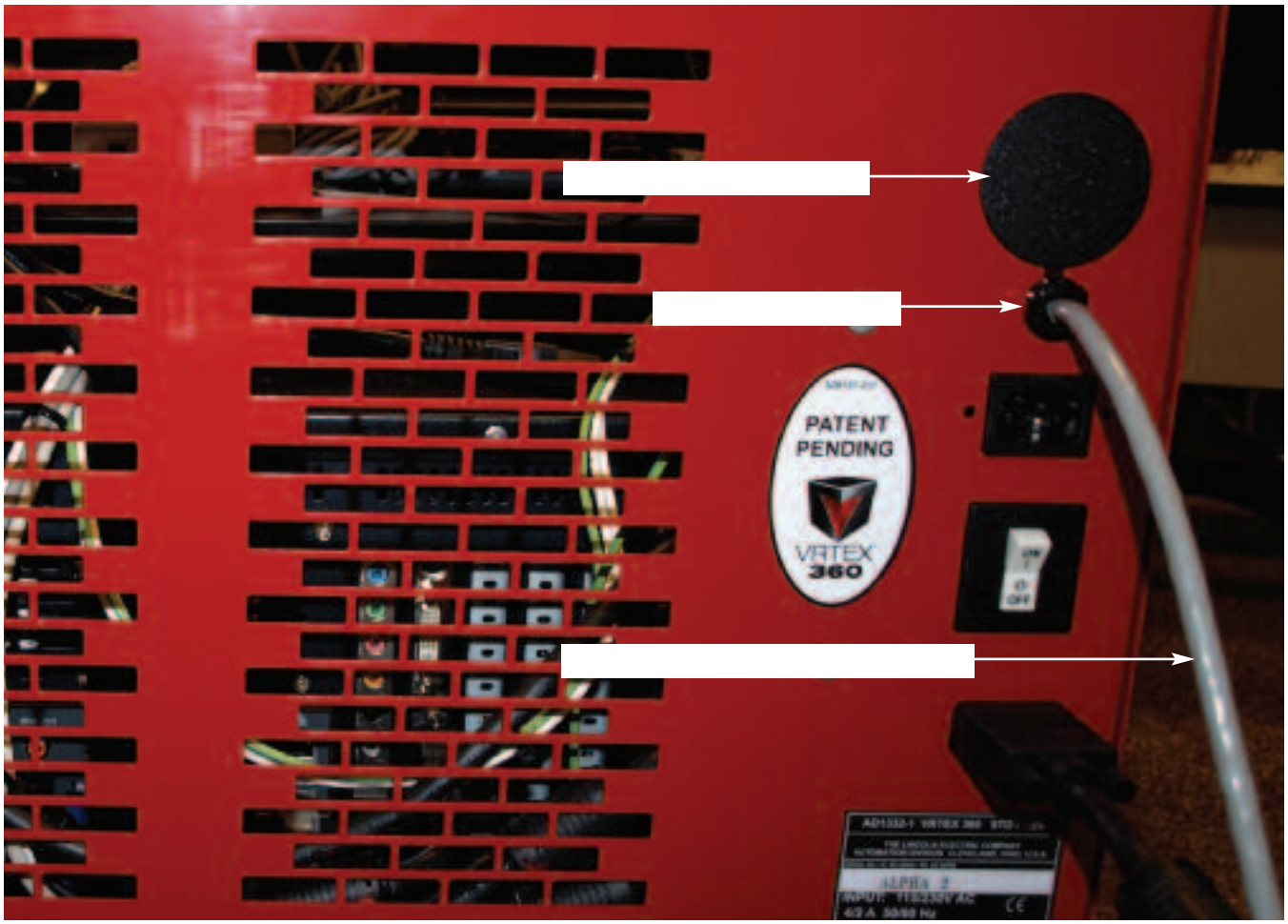

REPLACEMENT PROCEDURE

1. Replace the Table Swing Arm.
2. Carefully guide the Table Swing Arm cable through the 1¾" access hole in the case back.
3. Insert the plastic grommet into the 1¾" access hole.
4. Slide the new Table Swing Arm onto the top of the top of the table mounting post.
5. Replace any previously removed cable ties.
6. Install the strain relief from the Table Swing Arm cable previously removed from the rear of the machine.
7. Connect the previously removed cable labeled "SOURCE" to the polhemus module.
8. Perform ***Case Cover Replacement Procedure***.
9. Perform the ***Monitor and Pedestal Replacement Procedure***.
10. See the ***Retest After Repair.***

Return to Section TOC
Return to Master TOC

NOTES

F-104

Return to Section TOC
Return to Master TOC
Return to Section TOC
Return to Master TOC
Return to Section TOC
Return to Master TOC
Return to Section TOC
Return to Master TOC

CPU REMOVAL AND REPLACEMENT PROCEDURE

⚠ WARNING

Service and repair should be performed only by Lincoln Electric factory trained personnel. Unauthorized repairs performed on this equipment may result in danger to the technician or machine operator and will invalidate your factory warranty. For your safety and to avoid electrical shock, please observe all safety notes and precautions detailed throughout this manual.

If for any reason you do not understand the test procedures or are unable to perform the test/repairs safely, contact the Lincoln Electric Service Department for electrical troubleshooting assistance before you proceed. Call 1-888-935-3878.

TEST DESCRIPTION

This procedure will aid the technician in the removal and replacement of the CPU.

MATERIALS NEEDED

3/8" Wrench
Wiring Diagram

Return to Section TOC
Return to Master TOC

CPU REMOVAL AND REPLACEMENT PROCEDURE (continued)

FIGURE F.49 – CPU LOCATION

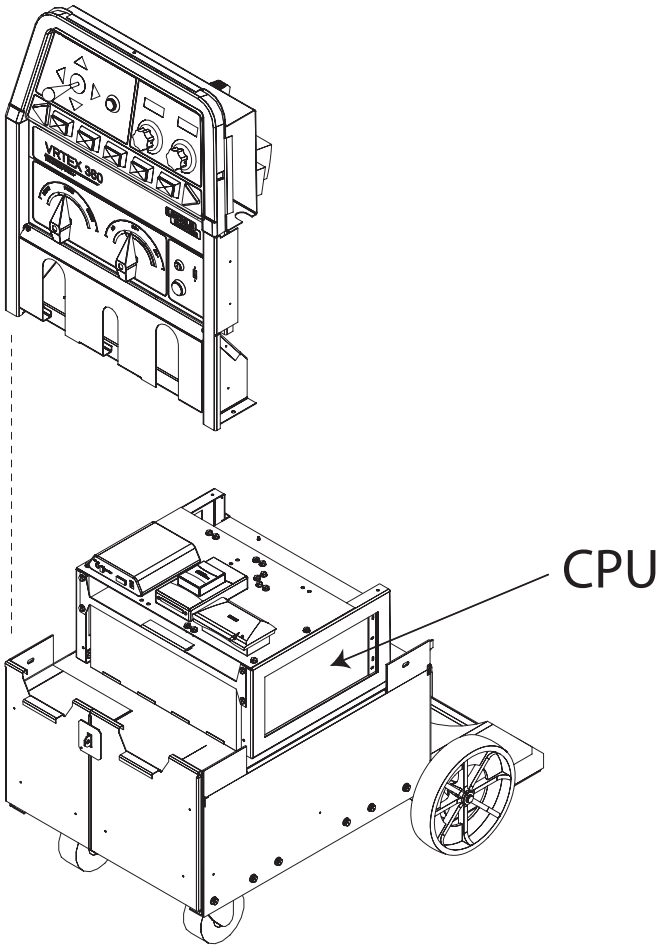

REMOVAL PROCEDURE

1. Remove input power.
2. Perform the ***Monitor and Pedestal Removal Procedure***.
3. Perform the ***Case Cover Removal Procedure***.
4. Locate the CPU. See Figure F.49.
5. Using a 3/8" wrench, remove the first three ground leads and associated washers from the inside of the case back. ***See Figure F.50.***

NOTE: Leave fourth ground lead connected. Case back can be removed with the fourth ground lead still connected.

6. Remove the strain relief from the cable leading to the welding stand. ***See Figure F.50.***
7. Using the 3/8" wrench, remove the three bottom screws from the case back. ***See Figure F.51.***
8. Carefully slide the case back to the side while being careful not to stretch or break any leads or connections.
9. Label and remove the five USB cables from the rear of the CPU. ***See Figure F.52.*** See wiring diagram.
10. Label and remove the three VGA cables from the rear of the CPU. ***See Figure F.52.*** See wiring diagram.
11. Label and remove the audio cable. ***See Figure F.52.*** See wiring diagram.
12. Using a 3/8" wrench, remove the four screws from the horizontal mounting shelf.
13. Lift the shelf high enough to "Break" the bond between the foam and the CPU.
14. Carefully slide the CPU toward the back of the machine.

NOTE: There are Hook & Loop connections between the CPU and the top and bottom foam layers.

15. Remove the CPU.

Return to Section TOC
Return to Master TOC

CPU REMOVAL AND REPLACEMENT PROCEDURE (continued)

FIGURE F.50 – GROUND LEADS

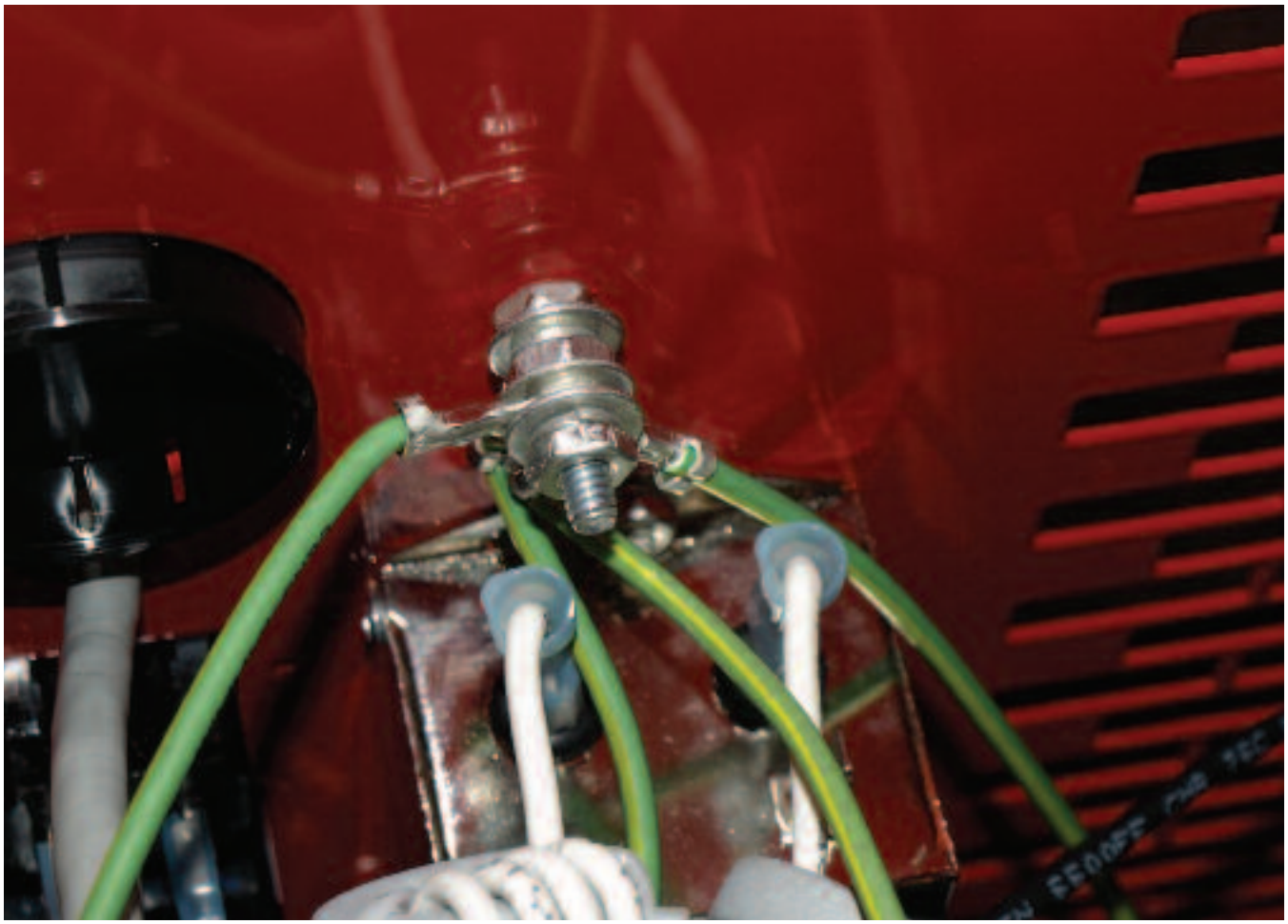

REPLACEMENT PROCEDURE

1. Attach Hook & Loop where necessary.

NOTE: Hook & Loop is supplied with new CPU.

2. Position new CPU into place between top and bottom foam layers.
3. Install the four previously removed horizontal mounting shelf screws.

NOTE: Make sure CPU ON/OFF switch is in the "ON" position at all times.

4. Connect the previously removed audio cable.
5. Connect the three previously removed VGA cables. See wiring diagram.
6. Connect the five previously removed USB cables. See wiring diagram.
7. Move the case back into the proper location and secure using the three screws previously removed.
8. Connect the previously removed external audio jack into the CPU.
9. Install the strain relief securing the welding stand cable.
10. Install and secure the three ground leads previously removed from inside of the case back.
11. Perform ***Case Cover Replacement Procedure***.
12. Perform the ***Monitor and Pedestal Replacement Procedure***.
13. Turn on input power
14. See the ***Retest After Repair.***

NOTE: Make sure CPU ON/OFF switch is in the "ON" position at all times.

Return to Section TOC
Return to Master TOC

CPU REMOVAL AND REPLACEMENT PROCEDURE (continued)

FIGURE F.51 – CASE BACK

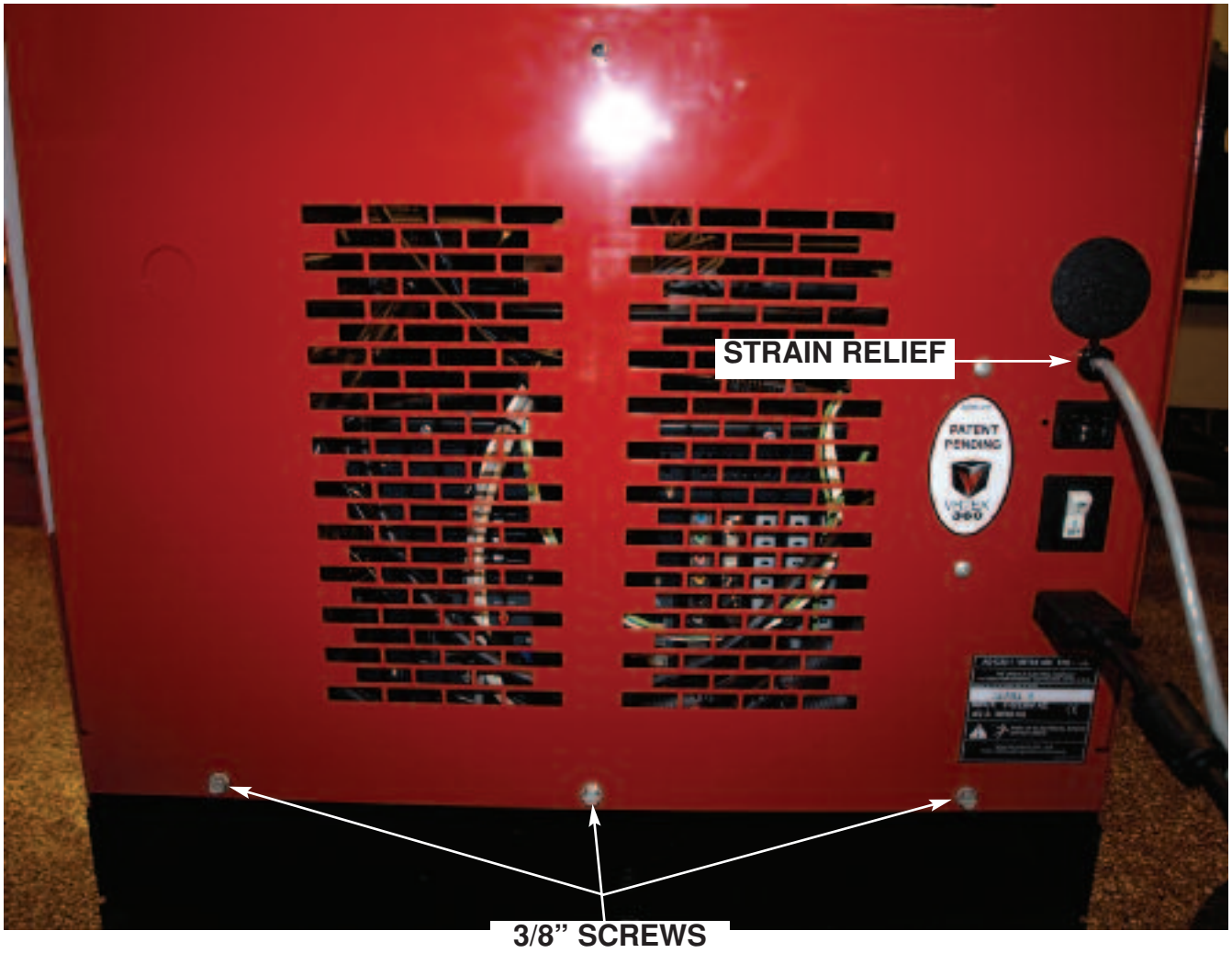

Return to Section TOC
Return to Master TOC

CPU REMOVAL AND REPLACEMENT PROCEDURE (continued)

FIGURE F.52 – CPU PLUG LOCATIONS

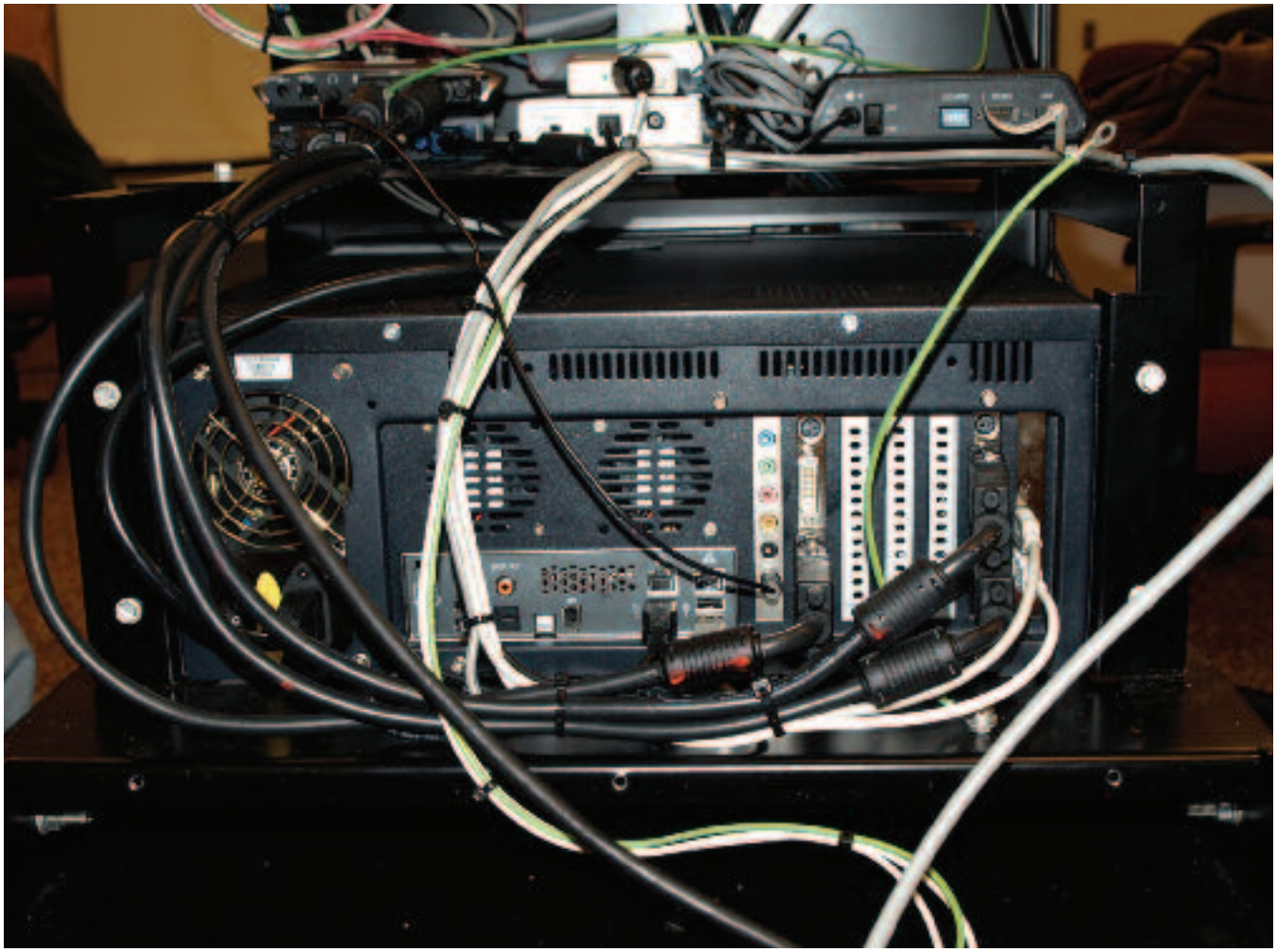

Return to Section TOC
Return to Master TOC

Return to Section TOC
Return to Master TOC

DESCRIPTION

This procedure will aid the technician in testing the basic operations of the Vertex™ 360 after any repair or replacement procedure has been completed.

1. Make sure the stand, the monitor, the VR GMAW/FCAW gun and the VR SMAW device are properly connected to the unit and are not damaged.
2. Connect the external speakers if available.
3. Connect the machine to the 115 – 230VAC power source.
4. Using the green circular push button turn on the Vertex™ 360. Keep the button depressed for at least 3 seconds.
5. When the unit has “booted-up” proceed with login. See ***Operation Section*** of this manual.
6. Insert a USB memory device into the USB port on the front of the machine
7. Navigate through the following: See the ***Operation Section*** of this manual.

a. Select coupon – must match actual coupon in arm.

b. Select 3/8 inch thickness.

c. Using the process selector switch select GMAW

d. Proceed with settings. See the ***Default Weld Process Settings***

8. Check the functionality of all the push buttons and lights. They must function as labeled. Listen for an audible signal when buttons are pressed.
9. Check the functionality of the VR GMAW/FCAW gun in all positions and with every coupon. When welding there must be visual and audio information in the helmet. If external speakers are used there must be audio information when welding.
10. Check all three different views using the right and left white screen select arrow keys.
11. Make certain that weld pass information can be saved in the USB memory device. See the ***Operation Section*** of this manual.
12. Press the RED rectangular push button and then using the joystick select “Change Process”. Select “Yes”.
13. Navigate through the following: See the ***Operation Section*** of this manual.

a. Select coupon – must match actual coupon in arm.

b. Select 3/8 inch thickness.

c. Using the process selector switch select VR SMAW

d. Proceed with settings. See the ***Default Weld Process Settings***

14. Check the functionality of the VR SMAW device in all positions and with every coupon. When welding there must be visual and audio information in the helmet. If external speakers are used there must be audio information when welding.
15. Physically rotate the stick device to 45 degrees position. The stick picture in the helmet must follow the actual movements.
16. Select “New Stick”. The physical stick should fully extend in the VR SMAW device. See the ***Operation Section*** of this manual.
17. Press the RED rectangular push button and then using the joystick select “Logout”. Select “Yes”. Login screen with keyboard appears.
18. Turn the key switch 90 degrees to the right. The instructor mode screen should appear. Check the update function for USB readiness.
19. Press the RED rectangular push button and then using the joystick select “Shutdown”. Select “Yes”.

TABLE OF CONTENTS - DIAGRAM SECTION

Return to Master TOC

Electrical Diagrams **G-1**

Schematic - Entire Machine - G3244-565 . . . . . G-2

Schematic - Relay PC Board - M22295-1D0 . . . . . G-3

PC Board Assembly - Relay PC BD - M22296-1 . . . . . G-4

SCHEMATIC - ENTIRE MACHINE - G3244-565

VRTEX 360 MACHINE SCHEMATIC

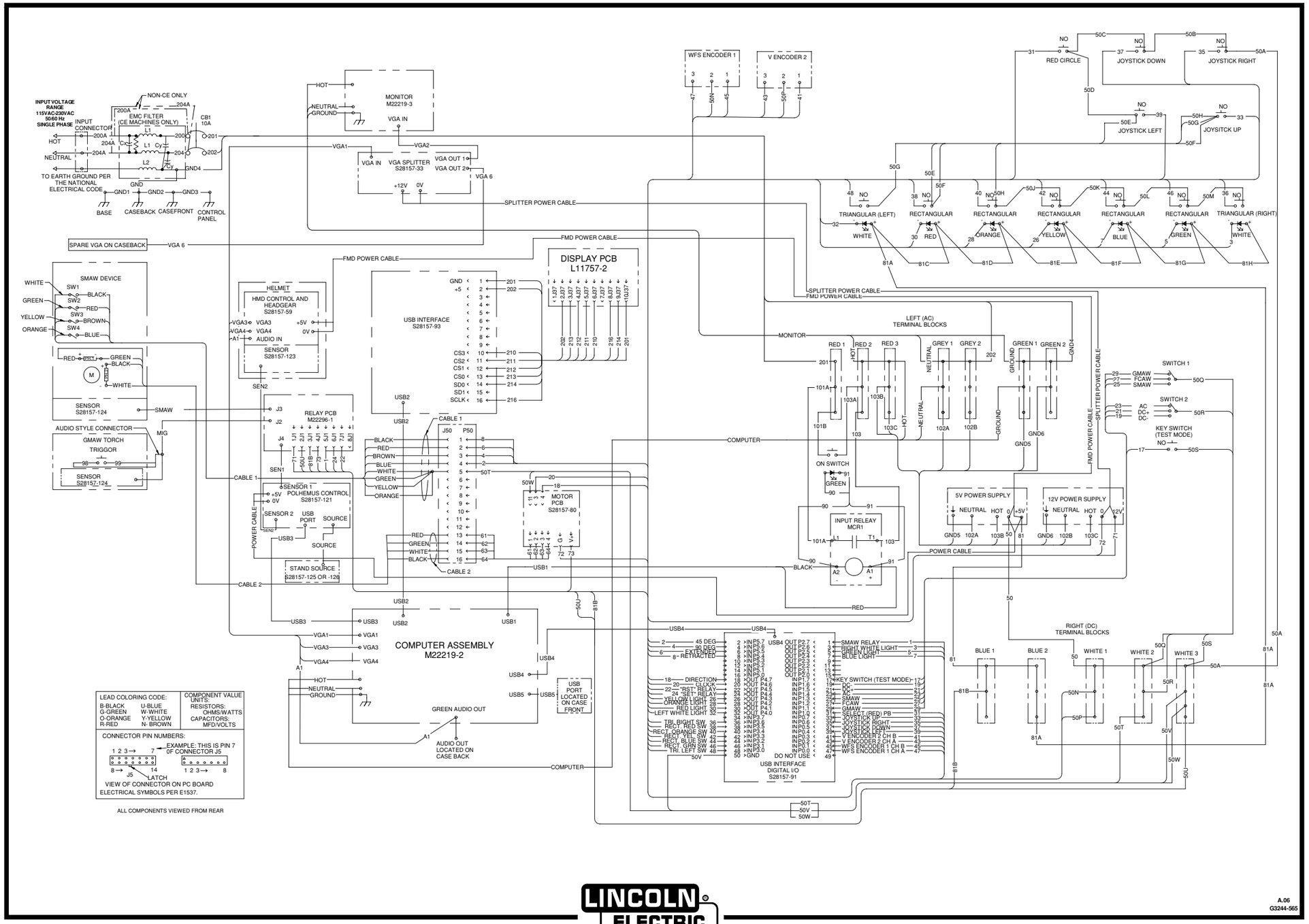

NOTE: This diagram is for reference only. It may not be accurate for all machines covered by this manual.

Return to Section TOC
Return to Master TOC

SCHEMATIC - RELAY PC BOARD - M22295-1D0

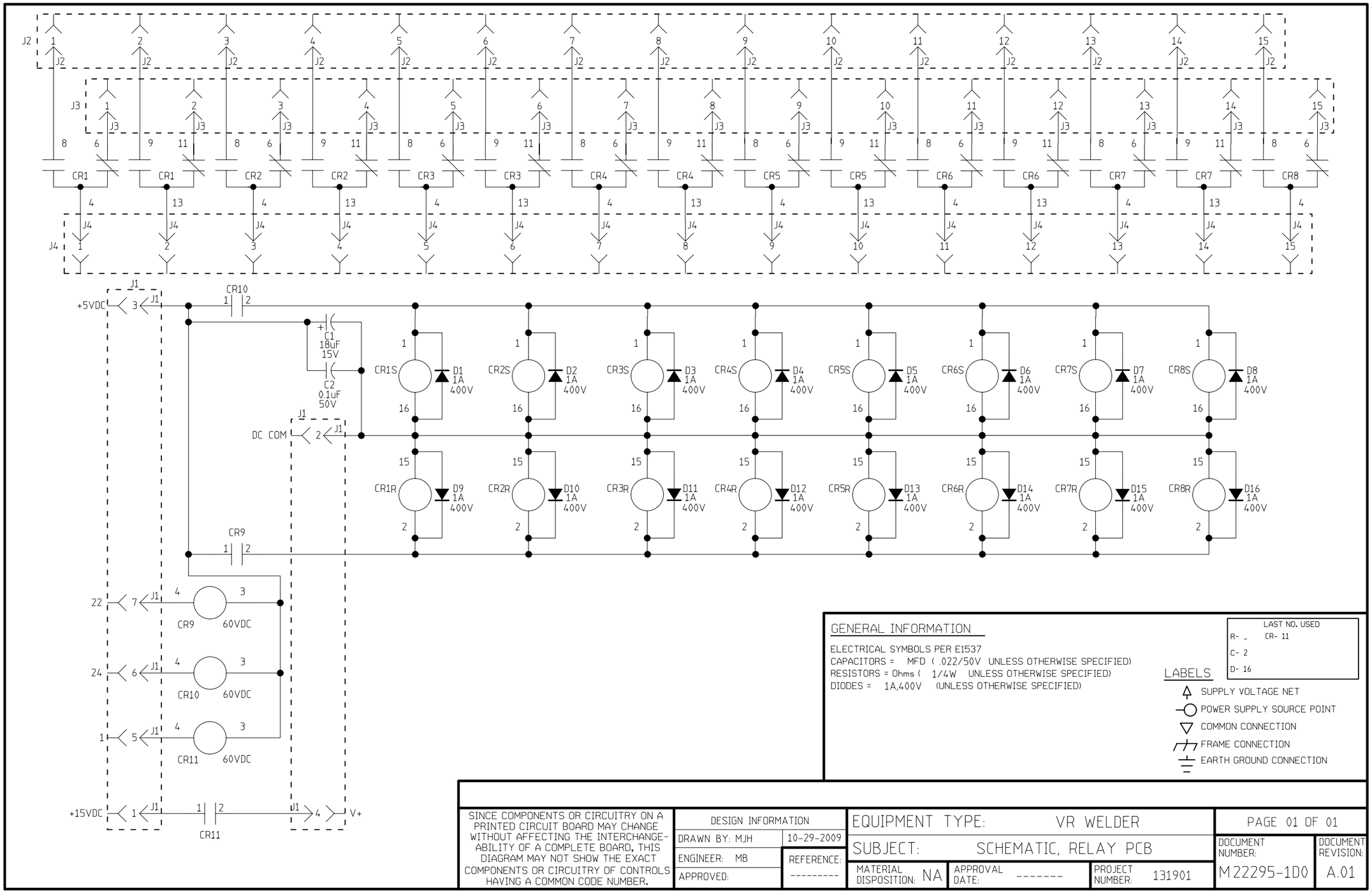

NOTE: This diagram is for reference only. It may not be accurate for all machines covered by this manual.

Return to Section TOC
Return to Master TOC

PC BOARD ASSEMBLY - RELAY PC BD - M22296-1

M22296-1

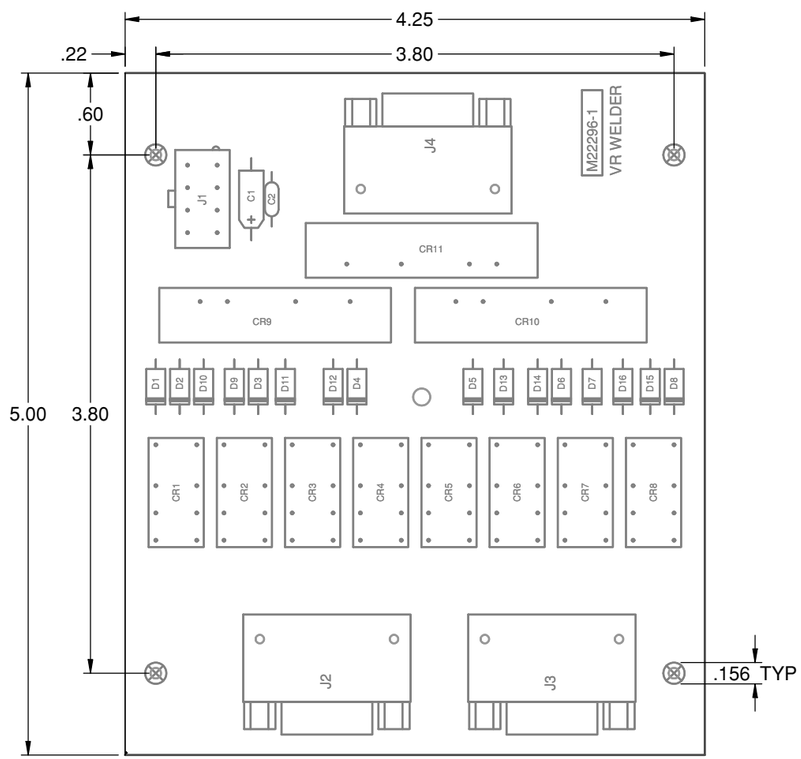

ITEM	QTY	PART NUMBER	DESCRIPTION
1	1	M22296-D	PC BOARD BLANK
REFER TO ELECTRONIC COMPONENT DATABASE FOR SPECIFICATIONS ON ITEMS LISTED BELOW			
REFERENCES	**QTY**	**PART NUMBER**	**DESCRIPTION**
C1	1	S13490-39	CAPACITOR,TAEL,18,15V 10%
C2	1	S16668-11	CAPACITOR,CEMO,0.1, 50V,10%
CR1, CR2, CR3, CR4, CR5, CR6, CR7, CR8	8	S13929-13	RELAY,DPDT,48VDC,11.52KOHMS,AU-AG
CR9, CR10, CR11	3	S13929-15	RELAY,DC60MP,60VDC,3A
D1, D2, D3, D4, D5, D6, D7, D8, D9, D10, D11, D12, D13, D14, D15, D16	16	T12199-1	DIODE,AXLDS,1A,400V
J1	1	S18248-8	CONNECTOR,MOLEX,MINI,PCB,8-PIN
J2, J3, J4	3	S28231-15	CONNECTOR,VGA,HD-15,SOCKET,RT-L

UNLESS OTHERWISE SPECIFIED:
CAPACITORS = MFD/VOLTS
INDUCTANCE = HENRIES
RESISTANCE = OHMS

MANUFACTURING TOLERANCE PER E2056 UNLESS OTHERWISE SPECIFIED TOLERANCE: ON 2 PLACE DECIMALS IS ± .02 in. (± 0.5 mm) ON 3 PLACE DECIMALS IS ± .002 ON ALL ANGLES IS ± .5 OF A DEGREE MATERIAL TOLERANCE (*t*) TO AGREE WITH PUBLISHED STANDARDS.	CONTROL: CLEVELAND	SCALE: 1:1 IF PRINTED @ A3 SIZE	EQUIPMENT TYPE: VRTEX 360			PAGE 1 OF 1
	DRAWN BY: BSB		SUBJECT: RELAY PCB ASSEMBLY			DOCUMENT NUMBER: M22296-1 / DOCUMENT: REVISION: A
	ENGINEER: MBRANT	UNITS: INCH	MATERIAL DISPOSITION: UF	APPROVAL DATE: 2/19/2010	PROJECT NUMBER: CRM42180	REFERENCE: -
DO NOT SCALE THIS DRAWING	APPROVED: OBS					

NOTE: Lincoln Electric assumes no responsibility for liablilities resulting from board level troubleshooting. PC Board repairs will invalidate your factory warranty. **Individual Printed Circuit Board Components are not available from Lincoln Electric.** This information is provided for reference only. Lincoln Electric discourages board level troubleshooting and repair since it may compromise the quality of the design and may result in danger to the Machine Operator or Technician. Improper PC board repairs could result in damage to the machine.

Return to Section TOC
Return to Master TOC