IM10078-A

July 2013

RED-D-ARC LN25™ PRO EXTREME

For use with machines having Code Numbers: 11748, 12167

Red-D-Arc Welderentals®

OPERATOR'S MANUAL

Red-D-Arc Spec-Built Welding Equipment

This ***RED-D-ARC*** welder is built to ***RED-D-ARC Extreme Duty*** design specifications by Lincoln Electric.

Safety Depends on You

This welder is designed and built with safety in mind.
However, your overall safety can be increased by proper installation ... and thoughtful operation on your part.
DO NOT INSTALL, OPERATE OR REPAIR THIS EQUIPMENT WITHOUT READING THIS MANUAL AND THE SAFETY PRECAUTIONS CONTAINED THROUGHOUT.
And, most importantly, think before you act and be careful.

1-800-245-3660

North America's Largest Fleet of Welding Equipment

THANK YOU FOR SELECTING A QUALITY PRODUCT BY LINCOLN ELECTRIC.

PLEASE EXAMINE CARTON AND EQUIPMENT FOR DAMAGE IMMEDIATELY

When this equipment is shipped, title passes to the purchaser upon receipt by the carrier. Consequently, claims for material damaged in shipment must be made by the purchaser against the transportation company at the time the shipment is received.

SAFETY DEPENDS ON YOU

Lincoln arc welding and cutting equipment is designed and built with safety in mind. However, your overall safety can be increased by proper installation ... and thoughtful operation on your part. **DO NOT INSTALL, OPERATE OR REPAIR THIS EQUIPMENT WITHOUT READING THIS MANUAL AND THE SAFETY PRECAUTIONS CONTAINED THROUGHOUT.** And, most importantly, think before you act and be careful.

⚠ WARNING

This statement appears where the information must be followed exactly to avoid serious personal injury or loss of life.

⚠ CAUTION

This statement appears where the information must be followed to avoid minor personal injury or damage to this equipment.

KEEP YOUR HEAD OUT OF THE FUMES.

DON'T get too close to the arc. Use corrective lenses if necessary to stay a reasonable distance away from the arc.

READ and obey the Safety Data Sheet (SDS) and the warning label that appears on all containers of welding materials.

USE ENOUGH VENTILATION or exhaust at the arc, or both, to keep the fumes and gases from your breathing zone and the general area.

IN A LARGE ROOM OR OUTDOORS, natural ventilation may be adequate if you keep your head out of the fumes (See below).

USE NATURAL DRAFTS or fans to keep the fumes away from your face.

If you develop unusual symptoms, see your supervisor. Perhaps the welding atmosphere and ventilation system should be checked.

WEAR CORRECT EYE, EAR & BODY PROTECTION

PROTECT your eyes and face with welding helmet properly fitted and with proper grade of filter plate (See ANSI Z49.1).

PROTECT your body from welding spatter and arc flash with protective clothing including woolen clothing, flame-proof apron and gloves, leather leggings, and high boots.

PROTECT others from splatter, flash, and glare with protective screens or barriers.

IN SOME AREAS, protection from noise may be appropriate.

BE SURE protective equipment is in good condition.

Also, wear safety glasses in work area **AT ALL TIMES.**

SPECIAL SITUATIONS

DO NOT WELD OR CUT containers or materials which previously had been in contact with hazardous substances unless they are properly cleaned. This is extremely dangerous.

DO NOT WELD OR CUT painted or plated parts unless special precautions with ventilation have been taken. They can release highly toxic fumes or gases.

Additional precautionary measures

PROTECT compressed gas cylinders from excessive heat, mechanical shocks, and arcs; fasten cylinders so they cannot fall.

BE SURE cylinders are never grounded or part of an electrical circuit.

REMOVE all potential fire hazards from welding area.

ALWAYS HAVE FIRE FIGHTING EQUIPMENT READY FOR IMMEDIATE USE AND KNOW HOW TO USE IT.

SECTION A: WARNINGS

CALIFORNIA PROPOSITION 65 WARNINGS

WARNING: Breathing diesel engine exhaust exposes you to chemicals known to the State of California to cause cancer and birth defects, or other reproductive harm.

- Always start and operate the engine in a well-ventilated area.
- If in an exposed area, vent the exhaust to the outside.
- Do not modify or tamper with the exhaust system.
- Do not idle the engine except as necessary.

For more information go to www.P65 warnings.ca.gov/diesel

WARNING: This product, when used for welding or cutting, produces fumes or gases which contain chemicals known to the State of California to cause birth defects and, in some cases, cancer. (California Health & Safety Code § 25249.5 *et seq.)*

WARNING: Cancer and Reproductive Harm www.P65warnings.ca.gov

ARC WELDING CAN BE HAZARDOUS. PROTECT YOURSELF AND OTHERS FROM POSSIBLE SERIOUS INJURY OR DEATH. KEEP CHILDREN AWAY. PACEMAKER WEARERS SHOULD CONSULT WITH THEIR DOCTOR BEFORE OPERATING.

Read and understand the following safety highlights. For additional safety information, it is strongly recommended that you purchase a copy of "Safety in Welding & Cutting - ANSI Standard Z49.1" from the American Welding Society, P.O. Box 351040, Miami, Florida 33135 or CSA Standard W117.2-1974. A Free copy of "Arc Welding Safety" booklet E205 is available from the Lincoln Electric Company, 22801 St. Clair Avenue, Cleveland, Ohio 44117-1199.

BE SURE THAT ALL INSTALLATION, OPERATION, MAINTENANCE AND REPAIR PROCEDURES ARE PERFORMED ONLY BY QUALIFIED INDIVIDUALS.

FOR ENGINE POWERED EQUIPMENT.

1.a. Turn the engine off before troubleshooting and maintenance work unless the maintenance work requires it to be running.

1.b. Operate engines in open, well-ventilated areas or vent the engine exhaust fumes outdoors.

1.c. Do not add the fuel near an open flame welding arc or when the engine is running. Stop the engine and allow it to cool before refueling to prevent spilled fuel from vaporizing on contact with hot engine parts and igniting. Do not spill fuel when filling tank. If fuel is spilled, wipe it up and do not start engine until fumes have been eliminated.

1.d. Keep all equipment safety guards, covers and devices in position and in good repair. Keep hands, hair, clothing and tools away from V-belts, gears, fans and all other moving parts when starting, operating or repairing equipment.

1.e. In some cases it may be necessary to remove safety guards to perform required maintenance. Remove guards only when necessary and replace them when the maintenance requiring their removal is complete. Always use the greatest care when working near moving parts.

1.f. Do not put your hands near the engine fan. Do not attempt to override the governor or idler by pushing on the throttle control rods while the engine is running.

1.g. To prevent accidentally starting gasoline engines while turning the engine or welding generator during maintenance work, disconnect the spark plug wires, distributor cap or magneto wire as appropriate.

1.h. To avoid scalding, do not remove the radiator pressure cap when the engine is hot.

ELECTRIC AND MAGNETIC FIELDS MAY BE DANGEROUS

2.a. Electric current flowing through any conductor causes localized Electric and Magnetic Fields (EMF). Welding current creates EMF fields around welding cables and welding machines

2.b. EMF fields may interfere with some pacemakers, and welders having a pacemaker should consult their physician before welding.

2.c. Exposure to EMF fields in welding may have other health effects which are now not known.

2.d. All welders should use the following procedures in order to minimize exposure to EMF fields from the welding circuit:

2.d.1. Route the electrode and work cables together - Secure them with tape when possible.

2.d.2. Never coil the electrode lead around your body.

2.d.3. Do not place your body between the electrode and work cables. If the electrode cable is on your right side, the work cable should also be on your right side.

2.d.4. Connect the work cable to the workpiece as close as possible to the area being welded.

2.d.5. Do not work next to welding power source.

ELECTRIC SHOCK CAN KILL.

3.a. The electrode and work (or ground) circuits are electrically "hot" when the welder is on. Do not touch these "hot" parts with your bare skin or wet clothing. Wear dry, hole-free gloves to insulate hands.

3.b. Insulate yourself from work and ground using dry insulation. Make certain the insulation is large enough to cover your full area of physical contact with work and ground.

In addition to the normal safety precautions, if welding must be performed under electrically hazardous conditions (in damp locations or while wearing wet clothing; on metal structures such as floors, gratings or scaffolds; when in cramped positions such as sitting, kneeling or lying, if there is a high risk of unavoidable or accidental contact with the workpiece or ground) use the following equipment:

- Semiautomatic DC Constant Voltage (Wire) Welder.
- DC Manual (Stick) Welder.
- AC Welder with Reduced Voltage Control.

3.c. In semiautomatic or automatic wire welding, the electrode, electrode reel, welding head, nozzle or semiautomatic welding gun are also electrically "hot".

3.d. Always be sure the work cable makes a good electrical connection with the metal being welded. The connection should be as close as possible to the area being welded.

3.e. Ground the work or metal to be welded to a good electrical (earth) ground.

3.f. Maintain the electrode holder, work clamp, welding cable and welding machine in good, safe operating condition. Replace damaged insulation.

3.g. Never dip the electrode in water for cooling.

3.h. Never simultaneously touch electrically "hot" parts of electrode holders connected to two welders because voltage between the two can be the total of the open circuit voltage of both welders.

3.i. When working above floor level, use a safety belt to protect yourself from a fall should you get a shock.

3.j. Also see Items 6.c. and 8.

ARC RAYS CAN BURN.

4.a. Use a shield with the proper filter and cover plates to protect your eyes from sparks and the rays of the arc when welding or observing open arc welding. Headshield and filter lens should conform to ANSI Z87. I standards.

4.b. Use suitable clothing made from durable flame-resistant material to protect your skin and that of your helpers from the arc rays.

4.c. Protect other nearby personnel with suitable, non-flammable screening and/or warn them not to watch the arc nor expose themselves to the arc rays or to hot spatter or metal.

FUMES AND GASES CAN BE DANGEROUS.

5.a. Welding may produce fumes and gases hazardous to health. Avoid breathing these fumes and gases. When welding, keep your head out of the fume. Use enough ventilation and/or exhaust at the arc to keep fumes and gases away from the breathing zone. **When welding hardfacing (see instructions on container or SDS) or on lead or cadmium plated steel and other metals or coatings which produce highly toxic fumes, keep exposure as low as possible and within applicable OSHA PEL and ACGIH TLV limits using local exhaust or mechanical ventilation unless exposure assessments indicate otherwise. In confined spaces or in some circumstances, outdoors, a respirator may also be required. Additional precautions are also required when welding on galvanized steel.**

5. b. The operation of welding fume control equipment is affected by various factors including proper use and positioning of the equipment, maintenance of the equipment and the specific welding procedure and application involved. Worker exposure level should be checked upon installation and periodically thereafter to be certain it is within applicable OSHA PEL and ACGIH TLV limits.

5.c. Do not weld in locations near chlorinated hydrocarbon vapors coming from degreasing, cleaning or spraying operations. The heat and rays of the arc can react with solvent vapors to form phosgene, a highly toxic gas, and other irritating products.

5.d. Shielding gases used for arc welding can displace air and cause injury or death. Always use enough ventilation, especially in confined areas, to insure breathing air is safe.

5.e. Read and understand the manufacturer's instructions for this equipment and the consumables to be used, including the Safety Data Sheet (SDS) and follow your employer's safety practices. SDS forms are available from your welding distributor or from the manufacturer.

5.f. Also see item 1.b.

WELDING AND CUTTING SPARKS CAN CAUSE FIRE OR EXPLOSION.

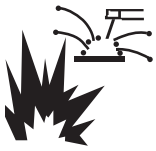

6.a. Remove fire hazards from the welding area. If this is not possible, cover them to prevent the welding sparks from starting a fire. Remember that welding sparks and hot materials from welding can easily go through small cracks and openings to adjacent areas. Avoid welding near hydraulic lines. Have a fire extinguisher readily available.

6.b. Where compressed gases are to be used at the job site, special precautions should be used to prevent hazardous situations. Refer to “Safety in Welding and Cutting” (ANSI Standard Z49.1) and the operating information for the equipment being used.

6.c. When not welding, make certain no part of the electrode circuit is touching the work or ground. Accidental contact can cause overheating and create a fire hazard.

6.d. Do not heat, cut or weld tanks, drums or containers until the proper steps have been taken to insure that such procedures will not cause flammable or toxic vapors from substances inside. They can cause an explosion even though they have been “cleaned”. For information, purchase “Recommended Safe Practices for the Preparation for Welding and Cutting of Containers and Piping That Have Held Hazardous Substances”, AWS F4.1 from the American Welding Society (see address above).

6.e. Vent hollow castings or containers before heating, cutting or welding. They may explode.

6.f. Sparks and spatter are thrown from the welding arc. Wear oil free protective garments such as leather gloves, heavy shirt, cuffless trousers, high shoes and a cap over your hair. Wear ear plugs when welding out of position or in confined places. Always wear safety glasses with side shields when in a welding area.

6.g. Connect the work cable to the work as close to the welding area as practical. Work cables connected to the building framework or other locations away from the welding area increase the possibility of the welding current passing through lifting chains, crane cables or other alternate circuits. This can create fire hazards or overheat lifting chains or cables until they fail.

6.h. Also see item 1.c.

6.I. Read and follow NFPA 51B “Standard for Fire Prevention During Welding, Cutting and Other Hot Work”, available from NFPA, 1 Batterymarch Park, PO box 9101, Quincy, MA 022690-9101.

6.j. Do not use a welding power source for pipe thawing.

CYLINDER MAY EXPLODE IF DAMAGED.

7.a. Use only compressed gas cylinders containing the correct shielding gas for the process used and properly operating regulators designed for the gas and pressure used. All hoses, fittings, etc. should be suitable for the application and maintained in good condition.

7.b. Always keep cylinders in an upright position securely chained to an undercarriage or fixed support.

7.c. Cylinders should be located:

- Away from areas where they may be struck or subjected to physical damage.
- A safe distance from arc welding or cutting operations and any other source of heat, sparks, or flame.

7.d. Never allow the electrode, electrode holder or any other electrically “hot” parts to touch a cylinder.

7.e. Keep your head and face away from the cylinder valve outlet when opening the cylinder valve.

7.f. Valve protection caps should always be in place and hand tight except when the cylinder is in use or connected for use.

7.g. Read and follow the instructions on compressed gas cylinders, associated equipment, and CGA publication P-I, “Precautions for Safe Handling of Compressed Gases in Cylinders,” available from the Compressed Gas Association, 14501 George Carter Way Chantilly, VA 20151.

FOR ELECTRICALLY POWERED EQUIPMENT.

8.a. Turn off input power using the disconnect switch at the fuse box before working on the equipment.

8.b. Install equipment in accordance with the U.S. National Electrical Code, all local codes and the manufacturer’s recommendations.

8.c. Ground the equipment in accordance with the U.S. National Electrical Code and the manufacturer’s recommendations.

Refer to http://www.lincolnelectric.com/safety for additional safety information.

PRÉCAUTIONS DE SÛRETÉ

Pour votre propre protection lire et observer toutes les instructions et les précautions de sûreté specifiques qui parraissent dans ce manuel aussi bien que les précautions de sûreté générales suivantes:

Sûreté Pour Soudage A L'Arc

1. Protegez-vous contre la secousse électrique:

   a. Les circuits à l'électrode et à la piéce sont sous tension quand la machine à souder est en marche. Eviter toujours tout contact entre les parties sous tension et la peau nue ou les vétements mouillés. Porter des gants secs et sans trous pour isoler les mains.
   b. Faire trés attention de bien s'isoler de la masse quand on soude dans des endroits humides, ou sur un plancher metallique ou des grilles metalliques, principalement dans les positions assis ou couché pour lesquelles une grande partie du corps peut être en contact avec la masse.
   c. Maintenir le porte-électrode, la pince de masse, le câble de soudage et la machine à souder en bon et sûr état defonctionnement.
   d. Ne jamais plonger le porte-électrode dans l'eau pour le refroidir.
   e. Ne jamais toucher simultanément les parties sous tension des porte-électrodes connectés à deux machines à souder parce que la tension entre les deux pinces peut être le total de la tension à vide des deux machines.
   f. Si on utilise la machine à souder comme une source de courant pour soudage semi-automatique, ces precautions pour le porte-électrode s'applicuent aussi au pistolet de soudage.

2. Dans le cas de travail au dessus du niveau du sol, se protéger contre les chutes dans le cas ou on recoit un choc. Ne jamais enrouler le câble-électrode autour de n'importe quelle partie du corps.

3. Un coup d'arc peut être plus sévère qu'un coup de soliel, donc:

   a. Utiliser un bon masque avec un verre filtrant approprié ainsi qu'un verre blanc afin de se protéger les yeux du rayonnement de l'arc et des projections quand on soude ou quand on regarde l'arc.
   b. Porter des vêtements convenables afin de protéger la peau de soudeur et des aides contre le rayonnement de l'arc.
   c. Protéger l'autre personnel travaillant à proximité au soudage à l'aide d'écrans appropriés et non-inflammables.

4. Des gouttes de laitier en fusion sont émises de l'arc de soudage. Se protéger avec des vêtements de protection libres de l'huile, tels que les gants en cuir, chemise épaisse, pantalons sans revers, et chaussures montantes.

5. Toujours porter des lunettes de sécurité dans la zone de soudage. Utiliser des lunettes avec écrans lateraux dans les zones où l'on pique le laitier.

6. Eloigner les matériaux inflammables ou les recouvrir afin de prévenir tout risque d'incendie dû aux étincelles.

7. Quand on ne soude pas, poser la pince à une endroit isolé de la masse. Un court-circuit accidental peut provoquer un échauffement et un risque d'incendie.

8. S'assurer que la masse est connectée le plus prés possible de la zone de travail qu'il est pratique de le faire. Si on place la masse sur la charpente de la construction ou d'autres endroits éloignés de la zone de travail, on augmente le risque de voir passer le courant de soudage par les chaines de levage, câbles de grue, ou autres circuits. Cela peut provoquer des risques d'incendie ou d'echauffement des chaines et des câbles jusqu'à ce qu'ils se rompent.

9. Assurer une ventilation suffisante dans la zone de soudage. Ceci est particuliérement important pour le soudage de tôles galvanisées plombées, ou cadmiées ou tout autre métal qui produit des fumeés toxiques.

10. Ne pas souder en présence de vapeurs de chlore provenant d'opérations de dégraissage, nettoyage ou pistolage. La chaleur ou les rayons de l'arc peuvent réagir avec les vapeurs du solvant pour produire du phosgéne (gas fortement toxique) ou autres produits irritants.

11. Pour obtenir de plus amples renseignements sur la sûreté, voir le code "Code for safety in welding and cutting" CSA Standard W 117.2-1974.

PRÉCAUTIONS DE SÛRETÉ POUR LES MACHINES À SOUDER À TRANSFORMATEUR ET À REDRESSEUR

1. Relier à la terre le chassis du poste conformement au code de l'électricité et aux recommendations du fabricant. Le dispositif de montage ou la piece à souder doit être branché à une bonne mise à la terre.

2. Autant que possible, l'installation et l'entretien du poste seront effectués par un électricien qualifié.

3. Avant de faires des travaux à l'interieur de poste, la debrancher à l'interrupteur à la boite de fusibles.

4. Garder tous les couvercles et dispositifs de sûreté à leur place.

Electromagnetic Compatibility (EMC)

Conformance
Products displaying the CE mark are in conformity with European Community Council Directive of 15 Dec 2004 on the approximation of the laws of the Member States relating to electromagnetic compatibility, 2004/108/EC. It was manufactured in conformity with a national standard that implements a harmonized standard: EN 60974-10 Electromagnetic Compatibility (EMC) Product Standard for Arc Welding Equipment. It is for use with other Lincoln Electric equipment. It is designed for industrial and professional use.

Introduction
All electrical equipment generates small amounts of electromagnetic emission. Electrical emission may be transmitted through power lines or radiated through space, similar to a radio transmitter. When emissions are received by other equipment, electrical interference may result. Electrical emissions may affect many kinds of electrical equipment; other nearby welding equipment, radio and TV reception, numerical controlled machines, telephone systems, computers, etc. Be aware that interference may result and extra precautions may be required when a welding power source is used in a domestic establishment.

Installation and Use
The user is responsible for installing and using the welding equipment according to the manufacturer's instructions. If electromagnetic disturbances are detected then it shall be the responsibility of the user of the welding equipment to resolve the situation with the technical assistance of the manufacturer. In some cases this remedial action may be as simple as earthing (grounding) the welding circuit, see Note. In other cases it could involve construction of an electromagnetic screen enclosing the power source and the work complete with associated input filters. In all cases electromagnetic disturbances must be reduced to the point where they are no longer troublesome.

Note: The welding circuit may or may not be earthed for safety reasons according to national codes. Changing the earthing arrangements should only be authorized by a person who is competent to access whether the changes will increase the risk of injury, e.g., by allowing parallel welding current return paths which may damage the earth circuits of other equipment.

Assessment of Area
Before installing welding equipment the user shall make an assessment of potential electromagnetic problems in the surrounding area. The following shall be taken into account:

a) other supply cables, control cables, signaling and telephone cables; above, below and adjacent to the welding equipment;

b) radio and television transmitters and receivers;

c) computer and other control equipment;

d) safety critical equipment, e.g., guarding of industrial equipment;

e) the health of the people around, e.g., the use of pacemakers and hearing aids;

f) equipment used for calibration or measurement

g) the immunity of other equipment in the environment. The user shall ensure that other equipment being used in the environment is compatible. This may require additional protection measures;

h) the time of day that welding or other activities are to be carried out.

Electromagnetic Compatibility (EMC)

The size of the surrounding area to be considered will depend on the structure of the building and other activities that are taking place. The surrounding area may extend beyond the boundaries of the premises.

Methods of Reducing Emissions

Mains Supply
Welding equipment should be connected to the mains supply according to the manufacturer's recommendations. If interference occurs, it may be necessary to take additional precautions such as filtering of the mains supply. Consideration should be given to shielding the supply cable of permanently installed welding equipment, in metallic conduit or equivalent. Shielding should be electrically continuous throughout its length. The shielding should be connected to the welding power source so that good electrical contact is maintained between the conduit and the welding power source enclosure.

Maintenance of the Welding Equipment
The welding equipment should be routinely maintained according to the manufacturer's recommendations. All access and service doors and covers should be closed and properly fastened when the welding equipment is in operation. The welding equipment should not be modified in any way except for those changes and adjustments covered in the manufacturers instructions. In particular, the spark gaps of arc striking and stabilizing devices should be adjusted and maintained according to the manufacturer's recommendations.

Welding Cables
The welding cables should be kept as short as possible and should be positioned close together, running at or close to floor level.

Equipotential Bonding
Bonding of all metallic components in the welding installation and adjacent to it should be considered. However, metallic components bonded to the work piece will increase the risk that the operator could receive a shock by touching these metallic components and the electrode at the same time. The operator should be insulated from all such bonded metallic components.

Earthing of the Workpiece
Where the workpiece is not bonded to earth for electrical safety, not connected to earth because of its size and position, e.g., ships hull or building steelwork, a connection bonding the workpiece to earth may reduce emissions in some, but not all instances. Care should be taken to prevent the earthing of the workpiece increasing the risk of injury to users, or damage to other electrical equipment. Where necessary, the connection of the workpiece to earth should be made by a direct connection to the workpiece, but in some countries where direct connection is not permitted, the bonding should be achieved by suitable capacitance, selected according to national regulations.

Screening and Shielding
Selective screening and shielding of other cables and equipment in the surrounding area may alleviate problems of interference. Screening of the entire welding installation may be considered for special applications[1].

---

[1] Portions of the preceding text are contained in EN 60974-10: "Electromagnetic Compatibility (EMC) product standard for arc welding equipment."

TABLE OF CONTENTS

Page

Installation.....Section A
Technical Specifications.....A-1
Safety Precautions.....A-2
Location.....A-2
High Frequency Protection.....A-2
Weld cable Sizes, Electrode Lead.....A-2
Shielding Gas Connection.....A-3
Wire Drive Configuration.....A-3, A-4
Gun Receiver Bushing, Thumb Screw, Socket Head Cap Screw.....A-4
Procedure to Install Drive Rolls and Wire Guides.....A-5
Loading Spools of Wire.....A-5
Pressure Arm Adjustment.....A-6
Gun Connections.....A-6
Power Source to RED-D-ARC LN25™ PRO EXTREME Cable Connection Diagrams.....A-7, A-8

Operation.....Section B
Safety Precautions.....B-1
Graphic Symbols that appear on this Machine or in this Manual.....B-1
Definition of Welding Terms.....B-2
General Description.....B-2
Recommended Processes, Equipment Limitations, Recommended Power Sources.....B-2
Case Front Controls.....B-3 thru B-4
Constant Current Wire Welding.....B-4
Case Front Controls Description.....B-4, B-5
Internal Controls.....B-6, B-7
Internal Controls Decription.....B-8
Rear Controls.....B-9

Accessories.....Section C
Factory Installed Equipment.....C-1
Drive Roll Kits used.....C-1
Accessories Used.....C-2 thru C-4

Maintenance.....Section D
Safety Precautions.....D-1
Routine Maintenance.....D-1
Periodic Maintenance.....D-1
Calibration Specification.....D-1,D-2

Troubleshooting.....Section E
How to Use Troubleshooting Guide.....E-1
Troubleshooting Guide.....E-2, E-4

Wiring Diagram & Dimension Prints.....Section F

Parts Pages.....P-668 Series

TECHNICAL SPECIFICATIONS – RED-D-ARC LN25™ PRO EXTREME (K2613-6)

INPUT VOLTAGE and CURRENT	
INPUT VOLTAGE ± 10%	INPUT AMPERES
15-110 VDC	4A

RATED OUTPUT @ 104°F (40°C)	
DUTY CYCLE	INPUT AMPERES
60% rating	450

GEARING - WIRE FEED SPEED RANGE-WIRE SIZE				
GEARING	GMAW		FCAW	
	WFS RANGE	WIRE SIZES	WFS RANGE	WIRE SIZES
Standard Speed K2613-6	50 – 700 ipm (1.3 – 17.7m/min)	.023 – 1/16" (0.6 – 1.6mm)	50 – 700 ipm (1.3 – 17.7m/min)	.030 - 5/64 (0.8 - 2.0mm)

PHYSICAL DIMENSIONS			
HEIGHT	WIDTH	DEPTH	WEIGHT
14.8 Inches (376 mm) Handle folded down	8.7 Inches (221 mm)	23.2 Inches (589 mm)	38 lbs (17 kg)

TEMPERATURE RANGE	
OPERATION:	-40°F to 104°F (-40°C to 40°C)
STORAGE:	-40°F to 122°F (-40°C to 50°C)

Thermal tests have been performed at ambient temperature. The duty cycle (duty factor) at 40°C has been determined by simulation.

Duty cycle is based upon the amount of welding performed in a 10 minute period.

SAFETY PRECAUTIONS

⚠ WARNING

ELECTRIC SHOCK CAN KILL.

- **Turn the input power OFF at the disconnect switch or fuse box before attempting to connect or disconnect input power lines, output cables or control cables.**
- **Only qualified personnel should perform this installation.**
- **Do not touch metal portions of the RED-D-ARC LN25™ PRO EXTREME work clip when the welding power source is on.**
- **Do not attach the work clip to the wire feeder.**
- **Connect the work clip directly to the work, as close as possible to the welding arc.**
- **Turn power off at the welding power source before disconnecting the work clip from the work.**
- **Only use on power sources with open circuit voltages less than 110 VDC.**

LOCATION For best wire feeding performance, place the RED-D-ARC LN25™ PRO EXTREME on a stable and dry surface. Keep the wire feeder in a vertical position. Do not operate the wire feeder on an angled surface of more than 15 degrees.

Do not submerge the RED-D-ARC LN25™ PRO EXTREME .

The RED-D-ARC LN25™ PRO EXTREME is rated IP23 and is suitable for outdoor use.

The handle of the RED-D-ARC LN25™ PRO EXTREME is intended for moving the wire feeder about the work place only.

When suspending a wire feeder, insulate the hanging device from the wire feeder enclosure.

HIGH FREQUENCY PROTECTION

⚠ CAUTION

Locate the RED-D-ARC LN25™ PRO EXTREME away from radio controlled machinery. The normal operation of the RED-D-ARC LN25™ PRO EXTREME may adversely affect the operation of RF controlled equipment, which may result in bodily injury or damage to the equipment.

WELD CABLE SIZE

Table A.1 located below are copper cable sizes recommended for different currents and duty cycles. Lengths stipulated are the distance from the welder to work and back to the welder again. Cable sizes are increased for greater lengths primarily for the purpose of minimizing cable drop.

ELECTRODE LEAD

The electrode lead is a 4/0 cable.

TABLE A.1

RECOMMENDED CABLE SIZES (RUBBER COVERED COPPER - RATED 167°F or 75°C)**						
AMPERES	PERCENT DUTY CYCLE	CABLE SIZES FOR COMBINED LENGTHS OF ELECTRODE AND WORK CABLES				
		0 to 50Ft. (0 to15m)	50 to 100Ft. (15 to 30m)	100 to 150 Ft. (30 to 46m)	150 to 200 Ft. (46 to 61m)	200 to 250 Ft. (61 to 76m)
200	60	2	2	2	1	1/0
200	100	2	2	2	1	1/0
225	20	4 or 5	3	2	1	1/0
225	40 & 30	3	3	2	1	1/0
250	30	3	3	2	1	1/0
250	40	2	2	1	1	1/0
250	60	1	1	1	1	1/0
250	100	1	1	1	1	1/0
300	60	1	1	1	1/0	2/0
325	100	2/0	2/0	2/0	2/0	3/0
350	60	1/0	1/0	2/0	2/0	3/0
400	60	2/0	2/0	2/0	3/0	4/0
400	100	3/0	3/0	3/0	3/0	4/0
500	60	2/0	2/0	3/0	3/0	4/0

** Tabled values are for operation at ambient temperatures of 104°F(40°C) and below. Applications above 104°F(40°C) may require cables larger than recommended, or cables rated higher than 167°F(75°C).

SHIELDING GAS CONNECTION

⚠ WARNING

CYLINDER may explode if damaged.

- **Keep cylinder upright and chained to support.**

- **Keep cylinder away from areas where it may be damaged.**
- **Never lift welder with cylinder attached.**
- **Never allow welding electrode to touch cylinder.**
- **Keep cylinder away from welding or other live electrical circuits.**

- **BUILD UP OF SHIELDING GAS MAY HARM HEALTH OR KILL.**
- **Shut off shielding gas supply when not in use.**
- **See American National Standard Z-49.1, "Safety in Welding and Cutting" Published by the American Welding Society.**

Maximum inlet pressure is 100 psi. (6.9 bar.)

Install the shielding gas supply as follows:

1. Secure the cylinder to prevent it from falling.
2. Remove the cylinder cap. Inspect the cylinder valves and regulator for damaged threads, dirt, dust, oil or grease. Remove dust and dirt with a clean cloth. **DO NOT ATTACH THE REGULATOR IF OIL, GREASE OR DAMAGE IS PRESENT!** Inform your gas supplier of this condition. Oil or grease in the presence of high pressure oxygen is explosive.
3. Stand to one side away from the outlet and open the cylinder valve for an instant. This blows away any dust or dirt which may have accumulated in the valve outlet.
4. Attach the flow regulator to the cylinder valve and tighten the union nut(s) securely with a wrench. Note: if connecting to 100% CO_2 cylinder, insert regulator adapter between regulator and cylinder valve. If adapter is equipped with a plastic washer, be sure it is seated for connection to the CO_2 cylinder.
5. Attach one end of the inlet hose to the outlet fitting of the flow regulator. Attach the other end to the welding system shielding gas inlet. Tighten the union nuts with a wrench.
6. Before opening the cylinder valve, turn the regulator adjusting knob counterclockwise until the adjusting spring pressure is released.
7. Standing to one side, open the cylinder valve slowly a fraction of a turn. When the cylinder pressure gage stops moving, open the valve fully.
8. The flow regulator is adjustable. Adjust it to the flow rate recommended for the procedure and process being used before making a weld.

WIRE DRIVE CONFIGURATIONS

⚠ WARNING

ELECTRIC SHOCK can kill.

- **Turn the input power OFF at the welding power source before installation or changing drive rolls and/or guides.**
- **Do not touch electrically live parts.**
- **When inching with the gun trigger, electrode and drive mechanism are "hot" to work and ground and could remain energized several seconds after the gun trigger is released.**
- **Do not operate with covers, panels or guards removed or open.**
- **Only qualified personnel should perform maintenance work.**

GUN BUSHING, THUMB SCREW AND SOCKET HEAD CAP SCREW

(See Figure A.2 for **Code 11748)**

Tools required:

- 1/4" hex key wrench.

Note: Some gun bushings do not require the use of the thumb screw.

1. Turn power off at the welding power source.
2. Remove the welding wire from the wire drive.
3. Remove the thumb screw from the wire drive.
4. Remove the welding gun from the wire drive.
5. Loosen the socket head cap screw that holds the connector bar against the gun bushing.
   Important: Do not attempt to completely remove the socket head cap screw.
6. Remove the outer wire guide, and push the gun bushing out of the wire drive. Because of the precision fit, light tapping may be required to remove the gun bushing.
7. Disconnect the shielding gas hose from the gun bushing, if required.

8. Connect the shielding gas hose to the new gun bushing, if required.

9. Rotate the gun bushing until the thumb screw hole aligns with the thumb screw hole in the feed plate. Slide the gun receiver bushing into the wire drive and verify the thumb screw holes are aligned.

10. Tighten the socket head cap screw 10 to 14 ft-lbs (13.5 to 19.0 Nm).

11. Insert the welding gun into the gun bushing and tighten the thumb screw.

FIGURE A.2

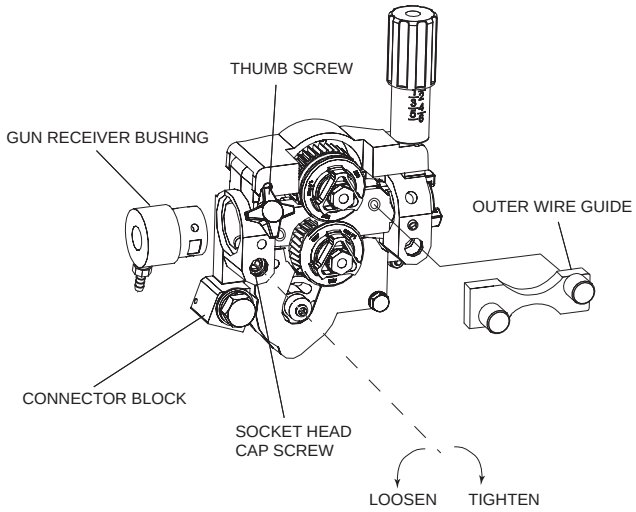

GUN BUSHING, THUMB SCREW AND SET SCREW

(See Figure A.2a **For Code 12167**)

The gun bushing is not interchangeable with other bushings. It is designed to be mechanically mounted in the feed plate and then bolted directly to the feeder's internal electrical welding buss bar. It accepts Magnum Pro guns (Tweco #2 to #4). This bushing should be removed only for service replacement. It is secured to the feed plate with an S11604-10 set screw torqued between 35 to 45 in.-lbs.

Tools required:

- 1/4" hex key wrench, (2) 3/4" Box Wrenches, 3/4" STD. Socket, Adjustable Torque Wrench (Snap Type)

1. Turn power off at the welding power source.

2. Remove the welding wire from the wire drive.

3. Remove the welding buss bar from the gun bushing assembly.

4. Remove the thumb screw from the wire drive.

5. Remove the welding gun from the wire drive.

6. Loosen set screw.

7. Remove the outer wire guide, and push the gun bushing out of the wire drive. Because of the precision fit, light tapping may be required to remove the gun bushing.

8. Disconnect the shielding gas hose from the gun bushing.

9. Connect the shielding gas hose to the new gun bushing.

10. Rotate the gun bushing until the thumb screw hole aligns with the thumb screw hole in the feed plate. Slide the gun bushing into the wire drive and verify the thumb screw holes are aligned.

11. Tighten set screw 35 to 45 in-lbs. (3.95 to 5.08Nm).

12. Connect welding buss bar to gun bushing assembly and tighten bolts to 33 to 44 Ft. Lbs. (44.8 to 59.7Nm).

13. Insert the welding gun into the gun bushing and tighten the thumb screw.

FIGURE A.2a

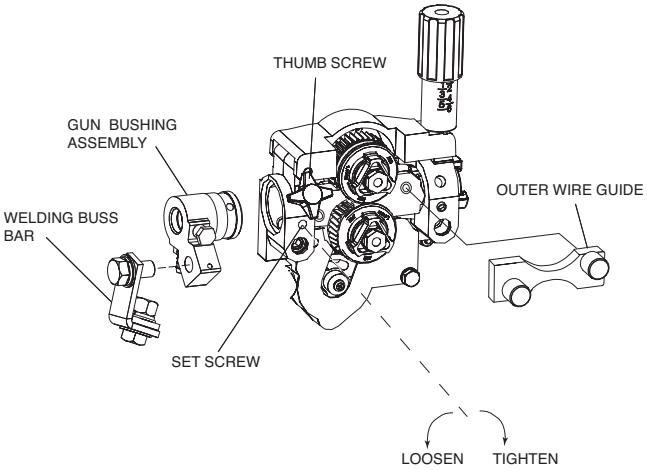

PROCEDURE TO INSTALL DRIVE ROLLS AND WIRE GUIDES

⚠ WARNING

- **Turn the input power OFF at the welding power source before installation or changing drive rolls and/or guides.**
- **Do not touch electrically live parts.**
- **When inching with the gun trigger, electrode and drive mechanism are "hot" to work and ground and could remain energized several seconds after the gun trigger is released.**
- **Do not operate with covers, panels or guards removed or open.**
- **Only qualified personnel should perform maintenance work.**

1. Turn power off at the welding power source.
2. Release the idle roll pressure arm.
3. Remove the outer wire guide by turning the knurled thumbscrews counter-clockwise to unscrew them from the feed plate.
4. Rotate the triangular lock and remove the drive rolls.

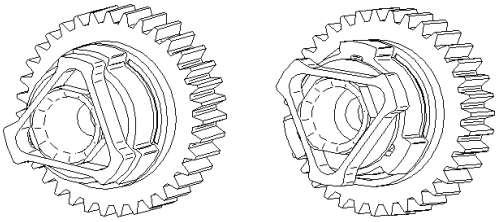

UNLOCKED POSITION LOCKED POSITION

5. Remove the inner wire guide.
6. Insert the new inner wire guide, groove side out, over the two locating pins in the feed plate.
7. Install a drive roll on each hub assembly secure with the triangular lock.
8. Install the outer wire guide by aligning it with the pins and tightening the knurled thumbscrews.
9. Close the idle arm and engage the idle roll pressure arm. Adjust the pressure appropriately.

⚠ WARNING

LOADING SPOOLS OF WIRE

- **Keep hands, hair, clothing and tools away from rotating equipment.**
- **Do not wear gloves when threading wire or changing wire spool.**
- **Only qualified personnel should install, use or service this equipment.**

Loading 10 to 15 lb. (4.5 – 6.8kg) Spools.

A K468 spindle adapter is required for loading 2" (51mm) wide spools on 2" (51mm) spindles. Use a K468 spindle adapter for loading 2-1/2" (64mm) wide spools.

1. Squeeze the release bar on the retaining collar and remove it from the spindle.
2. Place the spindle adapter on the spindle, aligning the spindle brake pin with the hole in the adapter.
3. Place the spool on the spindle and align the adapter brake tab with one of the holes in the back side of the spool. An indicator mark on the end of the spindle shows the orientation of the brake tab. Be certain the wire feeds off of the spool in the proper direction.
4. Re-install the retaining collar. Make sure that the release bar snaps out and that the retaining collar fully engages the groove on the spindle.

PRESSURE ARM and ADJUSTMENT

⚠ WARNING

ELECTRIC SHOCK can kill.

- **Turn the input power OFF at the welding power source before installation or changing drive rolls and/or guides.**
- **Do not touch electrically live parts.**
- **When inching with the gun trigger, electrode and drive mechanism are "hot" to work and ground and could remain energized several seconds after the gun trigger is released.**
- **Do not operate with covers, panels or guards removed or open.**
- **Only qualified personnel should perform maintenance work.**

The pressure arm controls the amount of force the drive rolls exert on the wire. Proper adjustment of the pressure arm gives the best welding performance. Many welding problems can be attributed to setting the pressure arm too high and causing wire deformation. Set the pressure arm to minimum amount that provides reliable feeding.

Set the pressure arm as follows:
(See Figure A.3)

Aluminum wires	between 1 and 2
Cored wires	between 1 and 3
Steel, Stainless wires	between 3 and 5

FIGURE A.3

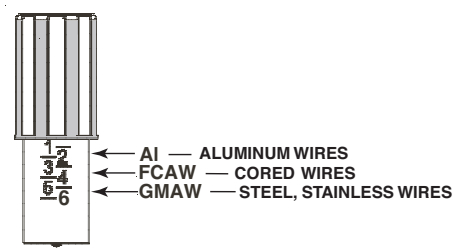

GUN CONNECTION

⚠ WARNING

ELECTRIC SHOCK can kill.

- **Turn the input power OFF at the welding power source before installation or changing drive rolls and/or guides.**
- **Do not touch electrically live parts.**
- **When inching with the gun trigger, electrode and drive mechanism are "hot" to work and ground and could remain energized several seconds after the gun trigger is released.**
- **Do not operate with covers, panels or guards removed or open.**
- **Only qualified personnel should perform maintenance work.**

The RED-D-ARC LN25™ PRO EXTREME comes with a K1500-2 gun adapter installed. (See Figure A.4 for **Code 11748**)

To install a gun,
1. Turn power OFF.
2. Remove the thumb screw.
3. Push the gun the completely into the gun bushing.
4. Secure the gun in place with the thumb screw.
5. Connect the trigger cable from the gun to the trigger connector on the front of the feeder.

Note: Not all gun bushings require the use of the thumb screw.

FIGURE A.4

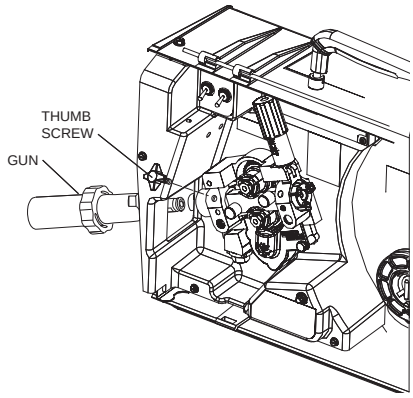

The RED-D-ARC LN25™ PRO EXTREME comes with an S29807-2 gun adapter installed. (See Figure A.4a for **Code 12167**)

To install a gun,
1. Turn power OFF.
2. Remove the Thumb Screw.
3. Push the gun the completely into the gun bushing.
4. Secure the gun in place with the Thumb Screw.
5. Connect the trigger cable from the gun to the trigger connector on the front of the feeder.

FIGURE A.4a

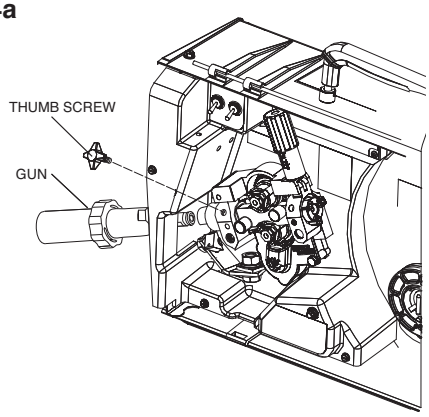

POWER SOURCE TO RED-D-ARC LN25™ PRO EXTREME CABLE CONNECTION DIAGRAMS

ACROSS THE ARC SET-UPS

CV Power Sources with Stud Connectors and Remote/Local Switch (See Figure A.6)

FIGURE A.6

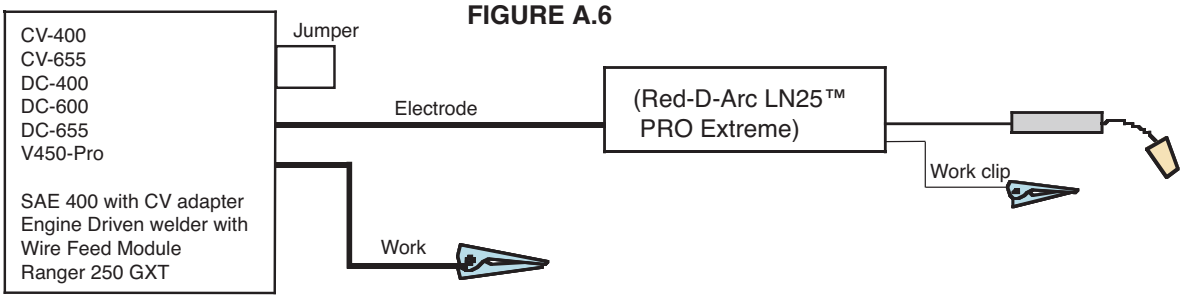

Place the power source Remote/Local switch in the Local position.

Place CV/CC switch in the feeder in the "CV" position.

K#	Description
K2613-6	(Red-D-Arc LN25™ PRO Extreme)
KP1695-XX	Drive Roll Kit
KP1696-XX	
KP1697-XX	
See Magnum Pro Literature	Welding Gun
	CV power Source
K1803-XX	Welding Cables
K484	Jumper Plug Kit

CV Power Sources with Stud Connectors and no Remote/Local Switch. (See Figure A.7)

FIGURE A.7

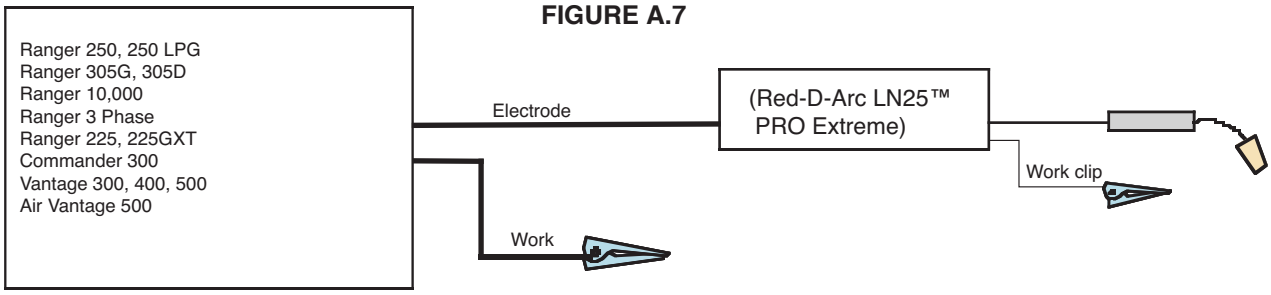

Place CV/CC switch in the feeder in the "CV" position.

K#	Description
K2613-6	(Red-D-Arc LN25™ PRO Extreme)
KP1695-XX	Drive Roll Kit
KP1696-XX	
KP1697-XX	
See Magnum Pro Literature	Welding Gun
	CC power Source
K1803-XX	Welding Cables

CV Power Source with Twist-Mate Connectors and Remote/Local Switch. (See Figure A.8)

FIGURE A.8

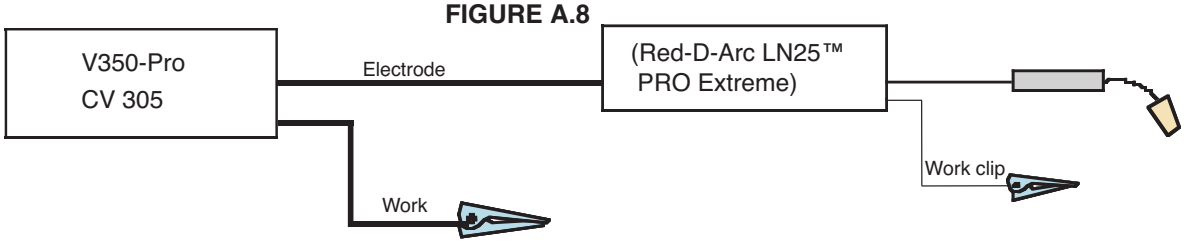

Place the power source Remote/Local switch in the Local position.

Place CV/CC switch in the feeder in the “CV” position.

K#	Description
K2613-6	(Red-D-Arc LN25™ PRO Extreme)
KP1695-XX	Drive Roll Kit
KP1696-XX	
KP1697-XX	
See Magnum Pro Literature	Welding Gun
	CV power Source
K1841-XX	Welding Cables
K852-95	Twist-Mate Cable Plug

CV Power Source with Twist-Mate Connectors and no Remote/Local Switch. (See Figure A.9)

FIGURE A.9

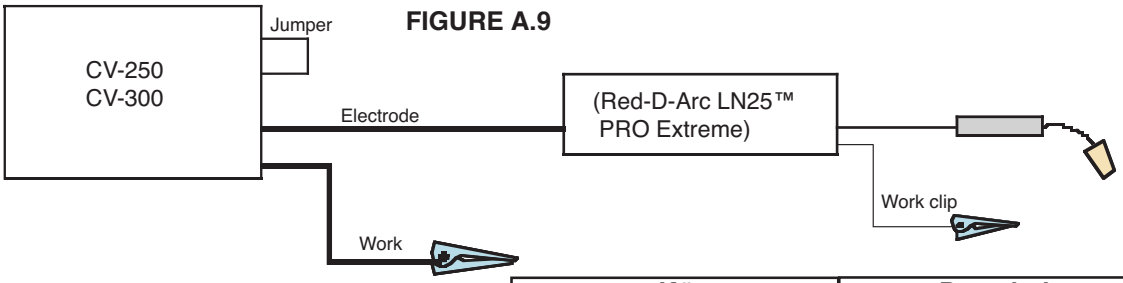

Place CV/CC switch in the feeder in the "CV" position.

K#	Description
K2613-6	(Red-D-Arc LN25™ PRO Extreme)
KP1695-XX	Drive Roll Kit
KP1696-XX	
KP1697-XX	
See Magnum Pro Literature	Welding Gun
	CV power Source
K1841-XX	Welding Cables
K852-95	Twist-Mate Cable plug
K484	Jumper Plug kit

SAFETY PRECAUTIONS

READ AND UNDERSTAND ENTIRE SECTION BEFORE OPERATING MACHINE.

⚠ WARNING

- ELECTRIC SHOCK CAN KILL. Unless using COLD FEED feature, when feeding with gun trigger, the electrode and drive mechanism are always electrically energized and could remain energized several seconds after the welding ceases..
- Do not touch electrically live part or electrode with skin or wet clothing.
- Insulate yourself from work and ground.
- Always wear dry insulating gloves.
- Do not operate with covers, panels or guards removed or open.

- FUMES AND GASSES can be dangerous.
- Keep your head out of fumes.
- Use ventilation or exhaust to remove fumes from breathing zone.

- WELDING SPARKS can cause fire or explosion.
- Keep flammable material away.

ARC RAYS can burn.
- Wear eye, ear and body protection.

SEE ADDITIONAL WARNING INFORMATION UNDER ARC WELDING SAFETY PRECAUTIONS AND IN THE FRONT OF THIS OPERATING MANUAL.

GRAPHIC SYMBOLS THAT APPEAR ON THIS MACHINE OR IN THIS MANUAL

	INPUT POWER
	ON
	OFF
	WIRE FEEDER
	POSITIVE OUTPUT
	NEGATIVE OUTPUT
	INPUT POWER
	DIRECT CURRENT
U_0	OPEN CIRCUIT VOLTAGE
U_1	INPUT VOLTAGE
U_2	OUTPUT VOLTAGE
I_1	INPUT CURRENT
I_2	OUTPUT CURRENT
	PROTECTIVE GROUND
	WARNING OR CAUTION

DEFINITION OF WELDING TERMS

WFS
• Wire Feed Speed

CC
• Constant Current

CV
• Constant Voltage

GMAW
• Gas Metal Arc welding

SMAW
• Shielded Metal Arc welding

FCAW
• Flux Core Arc Welding

GENERAL DESCRIPTION

General Physical Description
The RED-D-ARC LN25™ PRO EXTREME is specially engineered to be the most rugged portable wire feeder available.

(For **Code 12167** only) a dedicated gun adapter is mechanically secured into the feed plate but directly bolted to the feeder's internal electrical welding buss bar to reduce the likelihood of overheating occurring at the feed plate. The bushing accepts Magnum Pro guns (Tweco #2 to #4).

Models include a gas solenoid for the flexibility to run most wire processes.

The plastic case is molded from a high impact, flame retardant plastic for durability and low weight.

The heart of the RED-D-ARC LN25™ PRO EXTREME is the 2 roll MAXTRAC™ drive. The patented features on the wire drive offer tool-less changing of the drive rolls and wire guides for quick spool changes. A tachometer controlled motor powers the patented drive rolls for smooth, steady feeding without slippage.

With a 450 amp, 60% duty cycle rating, these feeders are ready for heavy duty welding.

General Functional Description
The RED-D-ARC LN25™ PRO EXTREME has adjustable WFS range for improving the knob sensitivity. The low range is great for critical welds with Innershield wires, and the upper range is suitable for general purpose welding. Selection of the WFS range is by a rocker switch or through the set-up menu on meters with digital displays.

RECOMMENDED PROCESSES

• GMAW
• FCAW

PROCESS LIMITATIONS

• GMAW-P procedures must be qualified by the customer.
• Across-the-Arc models are not recommended for stitch or spot welding.

EQUIPMENT LIMITATIONS

• The duty cycle of the wire feeder is 450A, 60%. Duty cycle is based upon the amount of welding performed in a 10 minute period.
• The maximum spool size is 45 lb. (24 Kg), 12" (305mm) diameter.
• Maximum FCAW gun length is 15 ft.
• Maximum GMAW gun length is 25 ft.
• K2330-1 Timer Kits do not work with the feeder. Use K2330-2 kits.
• Push-pull guns do not work with the RED-D-ARC LN25™ PRO EXTREME .
• The digital displays do not show preset voltage
• Not compatible with K489-7 Euro connector (except K2614-7,-8)

RECOMMENDED POWER SOURCES

• CV-305
• CV-400
• CV-655
• DC-400
• DC-600
• DC-655
• Invertec V-350
• FlexTec 450
• Multi-Weld 350
• Ranger 10,000
• Ranger 3 Phase
• Ranger 225
• Ranger 225 GXT
• Ranger 250
• Ranger 305
• SAE-400
• Pipeliner 200G
• Classic 300
• Vantage 300
• Vantage 400
• Vantage 500

(See **Customer Assistance Policy** in the front of this Instruction Manual)

CASE FRONT CONTROLS (See Figure B.1)

FIGURE B.1

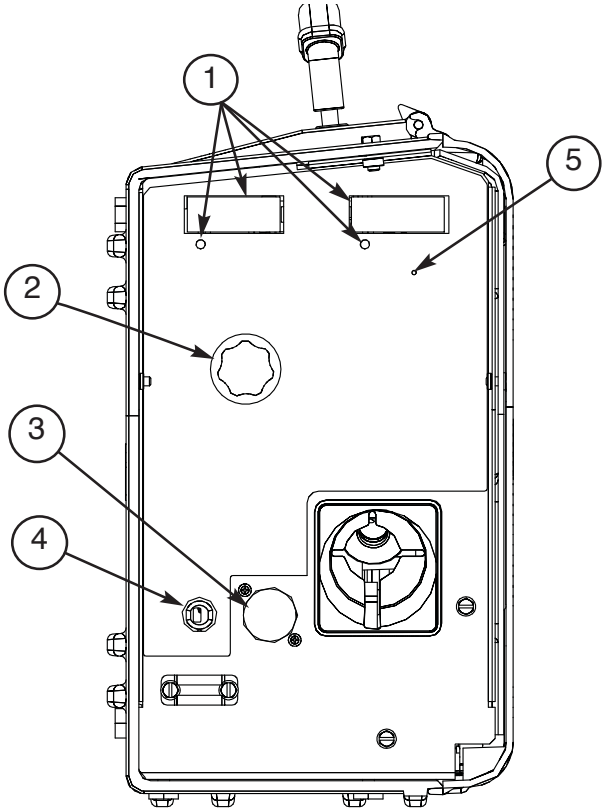

ITEM	DESCRIPTION
1	Digital Display
2	Wire Feed Speed Knob
3	5-pin gun trigger connector
4	Work sense lead
5	Set-up Pushbutton

1. DIGITAL DISPLAY

Power-up
All of the LED's will briefly illuminate during power-up.

Idle
The left display shows the preset wire feed speed. The right display is blank. The wire feed speed LED is lit.

Welding
The value in the left display will show actual wire feed speed. The right display shows the arc voltage. If the wire feeder is connected for electrode negative welding, then the voltage display shows a minus sign.

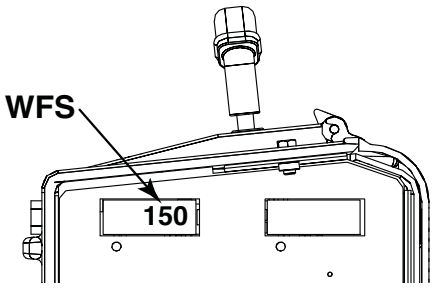

2. WIRE FEED SPEED KNOB

Use the Wire Feed Speed Knob to adjust the rate of wire feed speed.

Because the wire feeder is powered by the arc voltage, the full range of wire feed speed may not be available at low voltages. While welding, the display will show actual wire feed speed. If the actual WFS is less than set WFS, then the arc voltage may be too low for procedure.

The serviceability of a product or structure utilizing the RED-D-ARC LN25™ PRO EXTREME wire feeder is and must be the sole responsibility of the builder/user. Many variables beyond the control of The Lincoln Electric Company affect the results obtained in using the RED-D-ARC LN25™ PRO EXTREME wire feeder. These variables include, but are not limited to, welding procedure, plate chemistry and temperature, weldment design, fabrication methods and service requirements. The available range of the RED-D-ARC LN25™ PRO EXTREME wire feeder may not be suitable for all applications, and the builder/user is and must be solely responsible for welding settings.

Arc Voltage	Max WFS (Inches Per Minute)
15V	280ipm
17V	340ipm
21V	440ipm
24V	520ipm
27V	600ipm

3. TRIGGER CONNECTOR

There is one circular connector for the gun trigger on the front of the RED-D-ARC LN25™ PRO EXTREME. Note – if the gun trigger is already depressed when the feeder is powered up, the feeder will not activate. Release and then press the gun trigger to begin welding.

The 83% wire feed speed reduces the wire feed speed to 83% of the original set value when activated. For example, if the original wfs = 200 in/min, the feeder will regulate to 0.83 x 200 = 166 in/min.

The 83% trigger requires a gun with a dual procedure switch.

This feature is often useful when welding pipe, and a "cooler" procedure is required on the bottom portion.

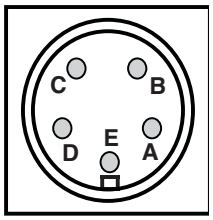

Function	Pin	Wiring
5-pin trigger connector for push-guns only.	A	5 volt supply
	B	Not used
	C	Trigger
	D	83% WFS switch
	E	5 volt supply

4. WORK SENSE LEAD

Always turn power off at the welding power source before moving the work sense lead.

The work sense lead attaches to the item being welded.

5. SET-UP MENU

Preparation for WFS Calibration:

- Place the CV/CC switch in CV.
- Set the display to the desired wire feed speed (example: 400 inches per minute)
- Measure the actual wire feed speed (example: 405 inches per minute)
- Place the WFS knob in the 12 o'clock position.

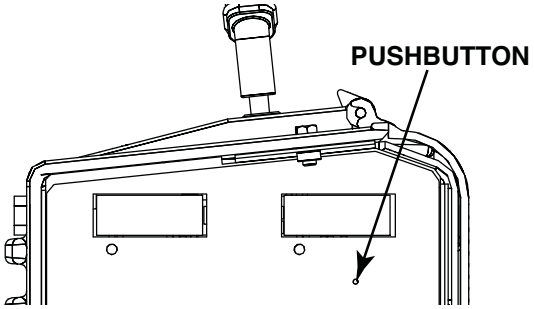

To enter the set-up menu, use paper clip to press the small button located on the case front.

WIRE FEED SPEED UNITS

To change the wire feed speed units:

Rotate the WFS knob to the left to use "inches/minute" for the wire feed speed units.

Rotate the WFS knob to the right to use "meters/minute" for the wire feed speed units.

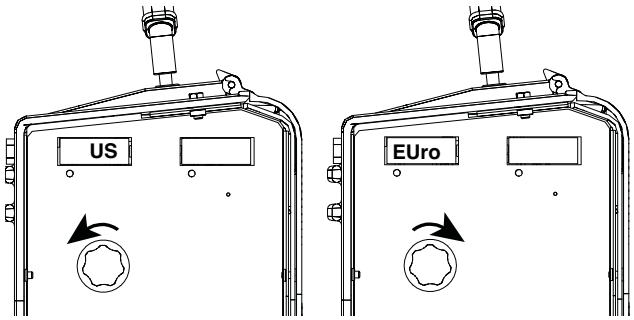

Then rotate the WFS knob to the 12 o'clock position.

WFS CALIBRATION

Measurements for adjusting the WFS calibration must be made before entering the set-up menu. When first entering WFS Calibration, the calibration factor displayed is based upon the position of the knob and does not reflect the actual calibration factor stored in memory.

If no changes are being made to the calibration, then press the set-up button to enter WFS Knob Range.

While in the set-up menu, adjust the calibration factor in the following example:

$$\frac{\text{Actual WFS}}{\text{Set WFS}} = \text{Caibration Factor} \qquad \text{Example: } \frac{405}{400} = 1.01$$

Press the set-up button when calibration factor is set.

INTERNAL CONTROLS
(FOR CODE 11748)

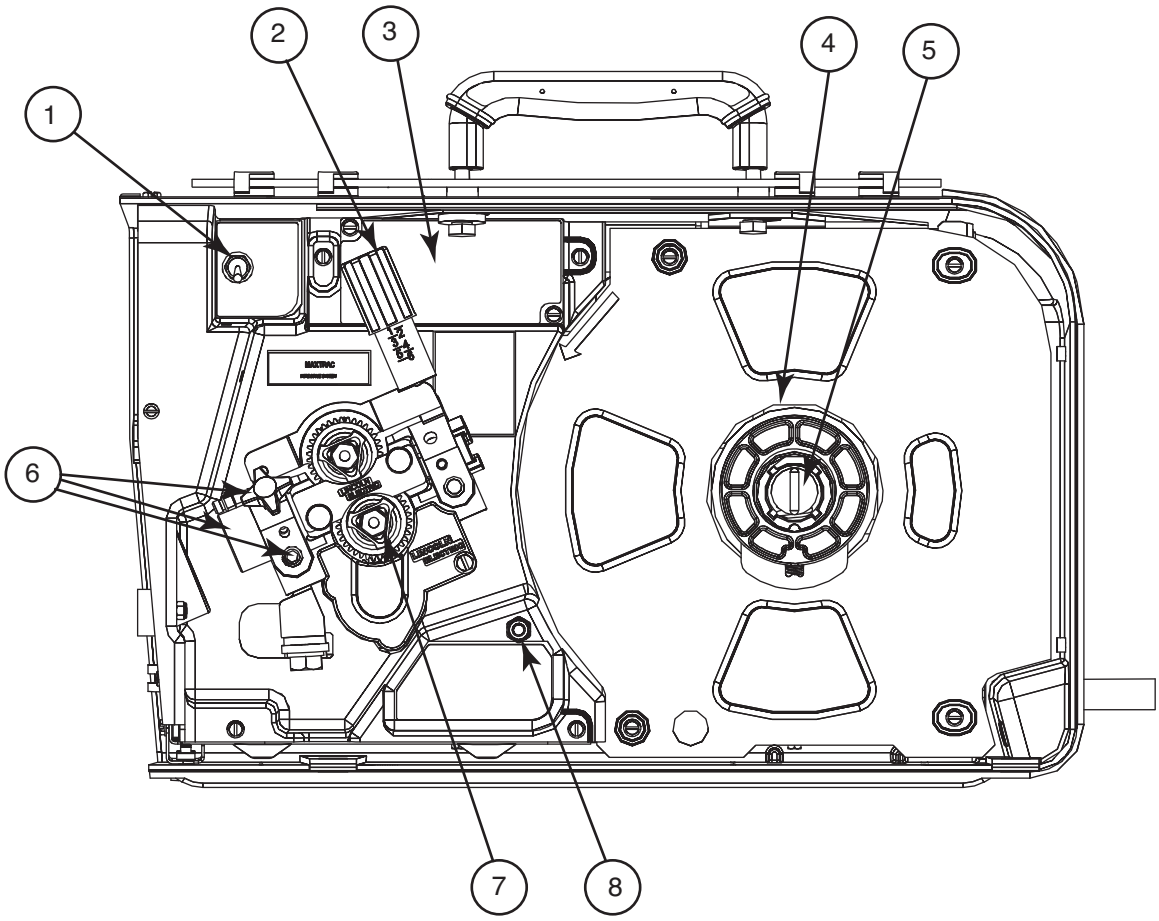

ITEM	DESCRIPTION
1	2 Step Trigger Interlock Switch
2	Pressure Arm
3	Optional Timer Kit
4	Spool Retainer
5	Spindle Brake
6	Gun Bushing, Thumb Screw and Socket Head Cap Screw
7	Drive Hubs
8	Cold Feed Pushbutton

INTERNAL CONTROLS
(FOR CODE 12167)

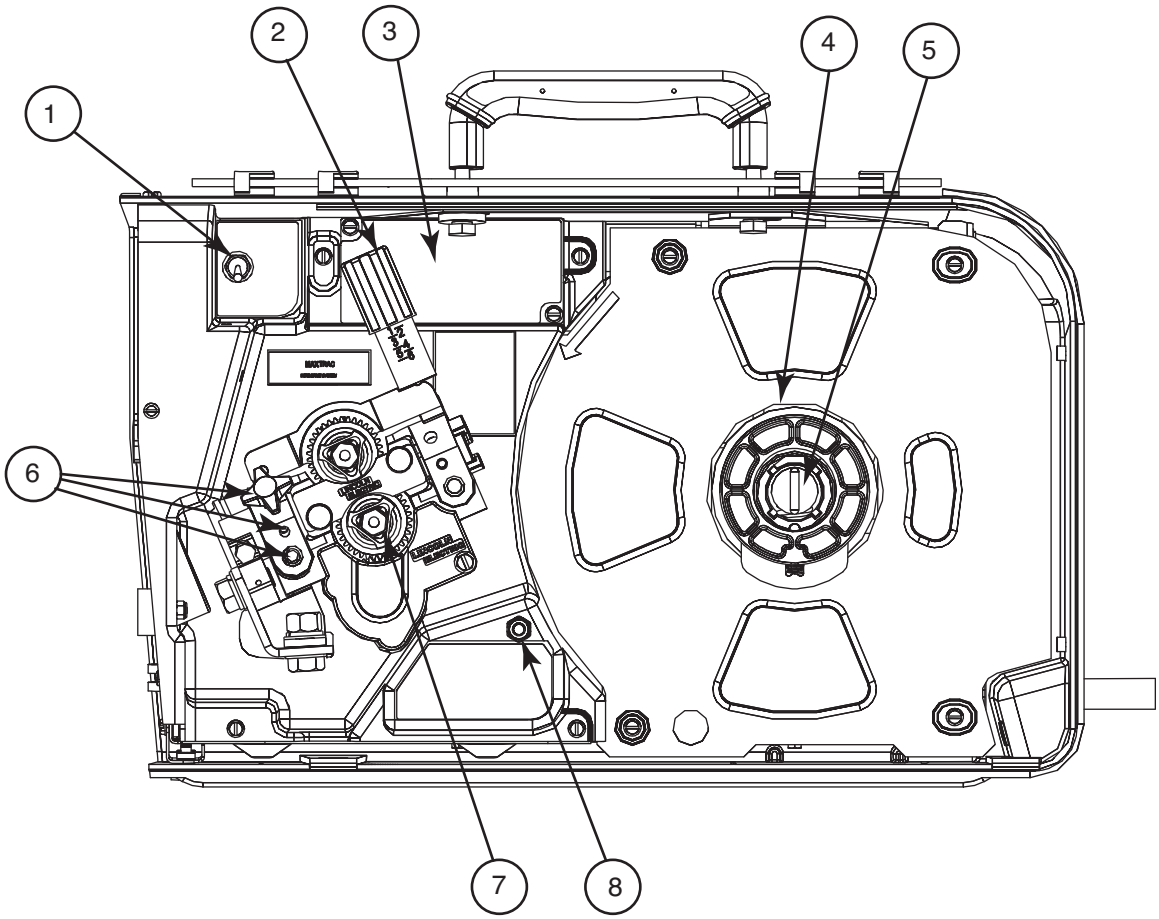

ITEM	DESCRIPTION
1	2 Step Trigger Interlock Switch
2	Pressure Arm
3	Optional Timer Kit
4	Spool Retainer
5	Spindle Brake
6	Gun Bushing, Thumb Screw and Set Screw
7	Drive Hubs
8	Cold Feed Pushbutton

INTERNAL CONTROLS DESCRIPTION

(See Figure B.2)

1. 2 STEP - TRIGGER INTERLOCK SWITCH

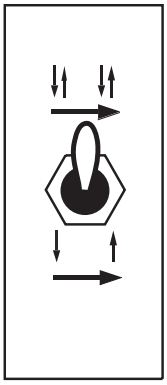

The 2 Step - Trigger Interlock switch changes the function of the gun trigger. 2 Step trigger operation turns welding on and off in direct response to the trigger. Trigger Interlock operation allows welding to continue when the trigger is released for comfort on long welds.

Place the toggle switch in the DOWN position for 2 Step operation or in the UP position for Trigger Interlock operation.

2 Step Trigger

2 Step trigger operation is the most common. When the gun trigger is pulled, the welding power source energizes the electrode output and the wire feeder feeds wire for welding. The power source and wire feeder continue welding until the trigger is released.

Trigger Interlock

Trigger Interlock operation provides for operator comfort when making long welds. When the gun trigger is first pulled, the welding power source energizes the output and the wire feeder feeds wire for welding. The gun trigger is then released while the weld is made. To stop welding, the gun trigger is pulled again, and when it is released the welding power source output turns off and the wire feeder stops feeding wire.

⚠ CAUTION

If the arc goes out while welding with trigger interlock operation, the electrode output from the welding power source remains energized and the wire feeder will continue to feed wire until the gun trigger is again pulled and then released.

2. PRESSURE ARM and ADJUSTMENT

(SEE INSTALLATION SECTION)

3. OPTIONAL TIMER KIT

The optional Timer Kit provides control of preflow time, burnback, and postflow time.

4. SPOOL RETAINER

To release the spool retainer, squeeze the metal bar inwards. When securing the spool, verify the spool retainer is fully seated in place in one of the three grooves of the spindle.

5. SPOOL BRAKE

Adjust the spool brake to provide enough friction to stop wire overrun. Excessive brake force may cause motor thermal overloads or welding problems.

6. GUN BUSHING, THUMB SCREW AND SOCKET HEAD CAP SCREW (For Code 11748)

(SEE INSTALLATION SECTION)

6. GUN BUSHING, THUMB SCREW AND SET SCREW (For Code 12167)

(SEE INSTALLATION SECTION)

7. DRIVE ROLLS AND WIRE GUIDES

(SEE INSTALLATION SECTION)

8. COLD FEED PUSHBUTTON

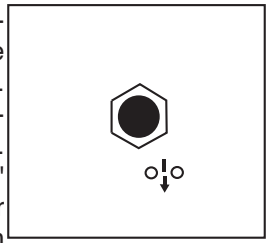

When cold feeding, the wire drive will feed electrode but neither the power source nor the gas solenoid will be energized. Adjust the speed of cold feeding by rotating the WFS knob. Cold feeding, or "cold inching" the electrode is useful for threading the electrode through the gun.

REAR CONTROLS:

(See Figure B.4)

1. GAS PURGE PUSHBUTTON

The gas solenoid valve will energize but neither the power source output nor the drive motor will be turned on. The Gas Purge switch is useful for setting the proper flow rate of shielding gas. Flow meters should always be adjusted while the shielding gas is flowing.

FIGURE B.4

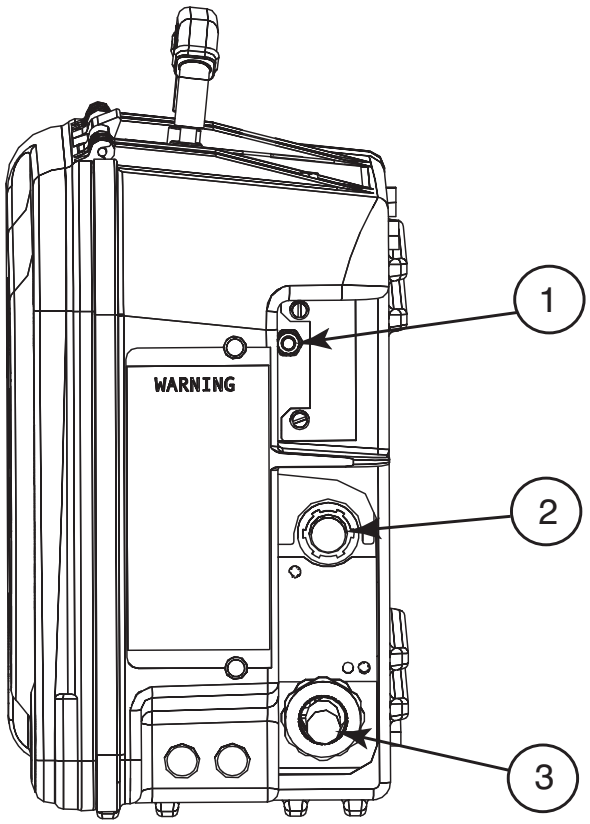

ITEM	DESCRIPTION
1	Gas Purge Pushbutton
2	Shielding Gas Inlet
3	Electrode Lead

FACTORY INSTALLED EQUIPMENT

• K1500-2 Gun Receiver Bushing.

DRIVE ROLL KITS USED

• See Parts Pages

K2330-2	Timer Kit	Includes: Panel and harness for adjusting preflow, burnback and postflow times.	
K2596-2	Plastic Case	Includes: a complete engineered plastic case.	
K1796-xx	AWG 1/0 Coaxial Power Cable	Includes: 1/0 Coaxial weld cable of length "xx". Ends of the weld cable have lug connections. Use for Pulse welding.	
K2593-xx	AWG #1 Coaxial Power Cable	Includes: AWG #1 Coaxial weld cable of length "xx". Ends of the weld cable have lug connections. Use for Pulse or STT™ welding.	
K1803-1	Work and Feeder Cables Package	Includes: Twist-Mate to Lug 2/0 cable 14' (1.2m) long with Ground Clamp, and Twist-Mate to Lug 2/0 Cable 9' (2.7m) long.	
K1840-xx	Weld Power Cable, Twist-Mate to Lug	Includes: Twist-Mate to Lug, 1/0 cable of length "xx".	
K1842-xx	Weld Power Cable, Lug to Lug	IIncludes: Lug to Lug, 3/0 Cable of length "xx" for lengths up to 60' (18.3m). Lug to Lug, 4/0 Cable of length "xx" for lengths greater than 60' (18.3m).	

K484	Jumper Plug Kit	Includes: 14 pin circular connector with jumper for leads 2-4. For use in power sources for turning the weld terminals "ON" at all times.	
K910-1	Ground Clamp	Includes: One 300 Amp Ground Clamp.	
K910-2	Ground Clamp	Includes: One 500 Amp Ground Clamp.	
K1500-1 (For Code 11748 only)	Gun Receiver Bushing (for guns with K466-1 Lincoln gun connectors; Innershield and Subarc guns)	Includes: Gun receiver bushing, set screw and hex key wrench.	
K1500-2 (For Code 11748 only)	Gun Receiver Bushing (for guns with K466-2, K466-10 Lincoln gun connectors; Magnum 200/300/400 guns and compatible with Tweco® #2-#4)	Includes: Gun receiver bushing with hose nipple, set screw and hex key wrench.	
K1500-3 (For Code 11748 only)	Gun Receiver Bushing (for guns with K613-7 Lincoln gun connectors; Magnum 550 guns and compatible with Tweco® #5)	Includes: Gun receiver bushing with hose nipple, set screw and hex key wrench.	

K1500-4 (For Code 11748 only)	Gun Receiver Bushing (for gun with K466-3 Lincoln gun connectors; compatible with Miller® guns.)	Includes: Gun receiver bushing with hose nipple, set screw and hex key wrench.	
K1500-5 (For Code 11748 only)	Gun Receiver Bushing (compatible with Oxo® guns.)	Includes: Gun receiver bushing with hose nipple, 4 guide tubes, set screw and hex key wrench.	
K435	Spindle Adapter, for mounting 14 lb. (6.4 kg) Innershield Coils on 2 in (51 mm) spindles.	Includes: Spindle Adapter made from 2 coil retainers. (Electrode not included.)	
K468	Spindle Adapter, for mounting 8in (203mm) diameter spools on 2 in (51 mm) spindles.	Includes: 2 Spindle Adapters, one for 2" wide spools and the other for 3" wide spools.	
K586-1	Deluxe Adjustable Gas Regulator	Includes: Deluxe Gas Regulator for Mixed Gases, Adapter for CO2 and 10' (3.0m) Hose.	
K283	Wire Feed Speed Meter	Includes: A wire feed speed meter with digital display.	

SAFETY PRECAUTIONS

⚠ WARNING

ELECTRIC SHOCK can kill.

- **Turn the input power OFF at the welding power source before installation or changing drive rolls and/or guides.**
- **Do not touch electrically live parts.**
- **When inching with the gun trigger, electrode and drive mechanism are "hot" to work and ground and could remain energized several seconds after the gun trigger is released.**
- **Do not operate with covers, panels or guards removed or open.**
- **Only qualified personnel should perform maintenance work.**

ROUTINE MAINTENANCE

- Check weld cables, control cables and gas hoses for cuts.
- Clean and tighten all weld terminals.

PERIODIC MAINTENANCE

- Clean drive rolls and inner wire guide and replace if worn.
- Blow out or vacuum the inside of the feeder.
- Inspect the motor brushes every 6 months. Replace if shorter than 0.5” (12.7mm).

CALIBRATION SPECIFICATION

See the **(OPERATION SECTION)**, set-up menu, for calibration of amperage and wire feed speed.

HOW TO USE TROUBLESHOOTING GUIDE

⚠ WARNING

Service and Repair should only be performed by Factory Trained Personnel. Unauthorized repairs performed on this equipment may result in danger to the technician and machine operator and will invalidate your factory warranty. For your safety and to avoid Electrical Shock, please observe all safety notes and precautions detailed throughout this manual.

This Troubleshooting Guide is provided to help you locate and repair possible machine malfunctions. Simply follow the three-step procedure listed below.

Step 1. LOCATE PROBLEM (SYMPTOM).
Look under the column labeled “PROBLEM (SYMPTOMS)”. This column describes possible symptoms that the machine may exhibit. Find the listing that best describes the symptom that the machine is exhibiting.

Step 2. POSSIBLE CAUSE.
The second column labeled “POSSIBLE CAUSE” lists the obvious external possibilities that may contribute to the machine symptom.

Step 3. RECOMMENDED COURSE OF ACTION
This column provides a course of action for the Possible Cause, generally it states to contact your local Field Service Facility.

If you do not understand or are unable to perform the Recommended Course of Action safely, contact your local Field Service Facility.

⚠ WARNING

ELECTRIC SHOCK can kill.

- **Turn the input power OFF at the welding power source before installation or changing drive rolls and/or guides.**
- **Do not touch electrically live parts.**
- **When inching with the gun trigger, electrode and drive mechanism are "hot" to work and ground and could remain energized several seconds after the gun trigger is released.**
- **Welding power source must be connected to system ground per the National Electrical Code or any applicable local codes.**
- **Only qualified personnel should perform maintenance work.**

⚠ CAUTION

If for any reason you do not understand the test procedures or are unable to perform the tests/repairs safely, contact your **Local Authorized Field Service Facility** for technical troubleshooting assistance before you proceed.

Observe all Safety Guidelines detailed throughout this manual

PROBLEMS (SYMPTOMS)	POSSIBLE CAUSE	RECOMMENDED COURSE OF ACTION
Digital Display Models Error Codes		
Err 81	Motor overload, long term.	1. Check that the electrode slides easily through the gun and cable. 2. Remove tight bends from the gun and cable. 3. Check that the spindle brake is not too tight. 4. Verify a high quality electrode is being used. 5. Wait for the error to reset and the motor to cool (approximately 1 minute).
Err 82	Motor overload, short term.	1. Check that motor can turn freely when idle arm is open. 2. Verify that the gears are free of debris and dirt.
Output Problems		
The feeder does power up - no display, no cold feed.	1. The work sense lead is disconnected or is a poor electrical connection. (Across the arc models) 2. The power source is OFF. 3. The circuit breaker for the wire feeder on power source have tripped. (control cable models) 4. The control cable may be loose or damaged. (control cable models)	1. Connect the work sense lead to the work in a location free of dirt, rust and paint. 2. Turn ON the power source. 3. Reset the circuit breakers. 4. Tighten, repair or replace the control cable.
(Across the Arc models) The wire feeder power up but there is no output when the trigger is pulled. The shielding gas is flowing and the drive rolls turn.	1. The contactor coil connections are loose. 2. The contactor has failed.	1. Verify the contactor coil connections. 2. Replace the contactor.
No shielding gas.	1. The gas supply is OFF or empty. 2. The gas hose is cut or crushed. 3. The flow meter valve is closed. 4. Dirt or debris is in the solenoid. 5. There is a loose solenoid connection. 6. The solenoid has failed.	1. Verify the gas supply is ON and flowing. 2. Route the gas hose so it avoids sharp corners and make sure nothing is on top of it. Repair or replace damaged hoses. 3. Open the flow meter valve. 4. Apply filtered shop at 80psi to the solenoid to remove dirt. 5. Remove the cover and check that all connections are in good condition. 6. Replace solenoid.

⚠ CAUTION

If for any reason you do not understand the test procedures or are unable to perform the tests/repairs safely, contact your **Local Authorized Field Service Facility** for technical troubleshooting assistance before you proceed.

Observe all Safety Guidelines detailed throughout this manual

PROBLEMS (SYMPTOMS)	POSSIBLE CAUSE	RECOMMENDED COURSE OF ACTION
Inconsistent wire feeding or wire not feeding but drive rolls turning.	1. The gun cable is kinked and/or twisted. 2. The wire is jammed in the gun and cable.	1. Keep the gun cable as straight as possible. Avoid sharp corners or bends in the cable. 2. Remove the gun from the wire feeder and pull the jammed wire out of the gun and cable. 3. Blow dirt out of the liner with low pressure (40psi or less). Replace the liner if worn. 4. Use only clean electrode. Use quality electrode, like L-50 or L-56 from Lincoln Electric. 5. Replace the contact tip. 6. Verify the proper parts are installed. 7. Adjust the tension arm per the Instruction Manual. Most electrodes feed well at a tension arm setting of "3". 8. Verify the spool of wire moves with minimal effort. 9. Replace the drive rolls if worn or filled with dirt.
Wire feed speed consistently operates at the wrong value. The speed changes when the wire feed speed knob is adjusted.	1. The wrong gear is installed in the wire drive. 2. The brushes on the motor are worn.	1. Install the proper pinion gear in the wire drive. 2. Inspect and replace the motor brushes.
The wire feed speed stuck at 200-300 in/min and there is no change when the wire feed speed knob is adjusted.	1. The tachometer is connected improperly. 2. The tachometer has failed.	1. Verify all of the tachometer leads are properly connected. 2. Replace the motor and tachometer assembly.

⚠ CAUTION

If for any reason you do not understand the test procedures or are unable to perform the tests/repairs safely, contact your **Local Authorized Field Service Facility** for technical troubleshooting assistance before you proceed.

Observe all Safety Guidelines detailed throughout this manual

PROBLEMS (SYMPTOMS)	POSSIBLE CAUSE	RECOMMENDED COURSE OF ACTION
Output Problems		
Variable or "hunting" arc.	1. Wrong size, worn and/or melted contact tip. 2. Worn work cable or poor work connection. 3. Wrong polarity. 4. The gas nozzle is extended beyond the contact tip or the wire stickout is too long. 5. Poor gas shielding on processes requiring gas.	1. Replace the contact tip. 2. Verify all work and electrode connections are tight and that the cables are in good condition. Clean/replace as necessary. 3. Adjust polarity to the recommended procedure. 4. Adjust the gas nozzle and shorten the stickout to 3/8 to 1/2 inches. 5. Check gas flow and mixture. Remove or block sources of drafts.
When the trigger is pulled, the wire feeds slowly.	The Run-In switch is “ON”.	Use the set-up Push-button to turn Run-in OFF.
Poor arc starts with sticking or "blast-offs", weld porosity, narrow and ropy looking bead.	1. Improper procedures or techniques.	1. See "Gas Metal Arc Welding Guide" (GS-100).

⚠ CAUTION

If for any reason you do not understand the test procedures or are unable to perform the tests/repairs safely, contact your **Local Authorized Field Service Facility** for technical troubleshooting assistance before you proceed.

WIRING DIAGRAM- LN-25 PRO RED-D-ARC, DIGITAL

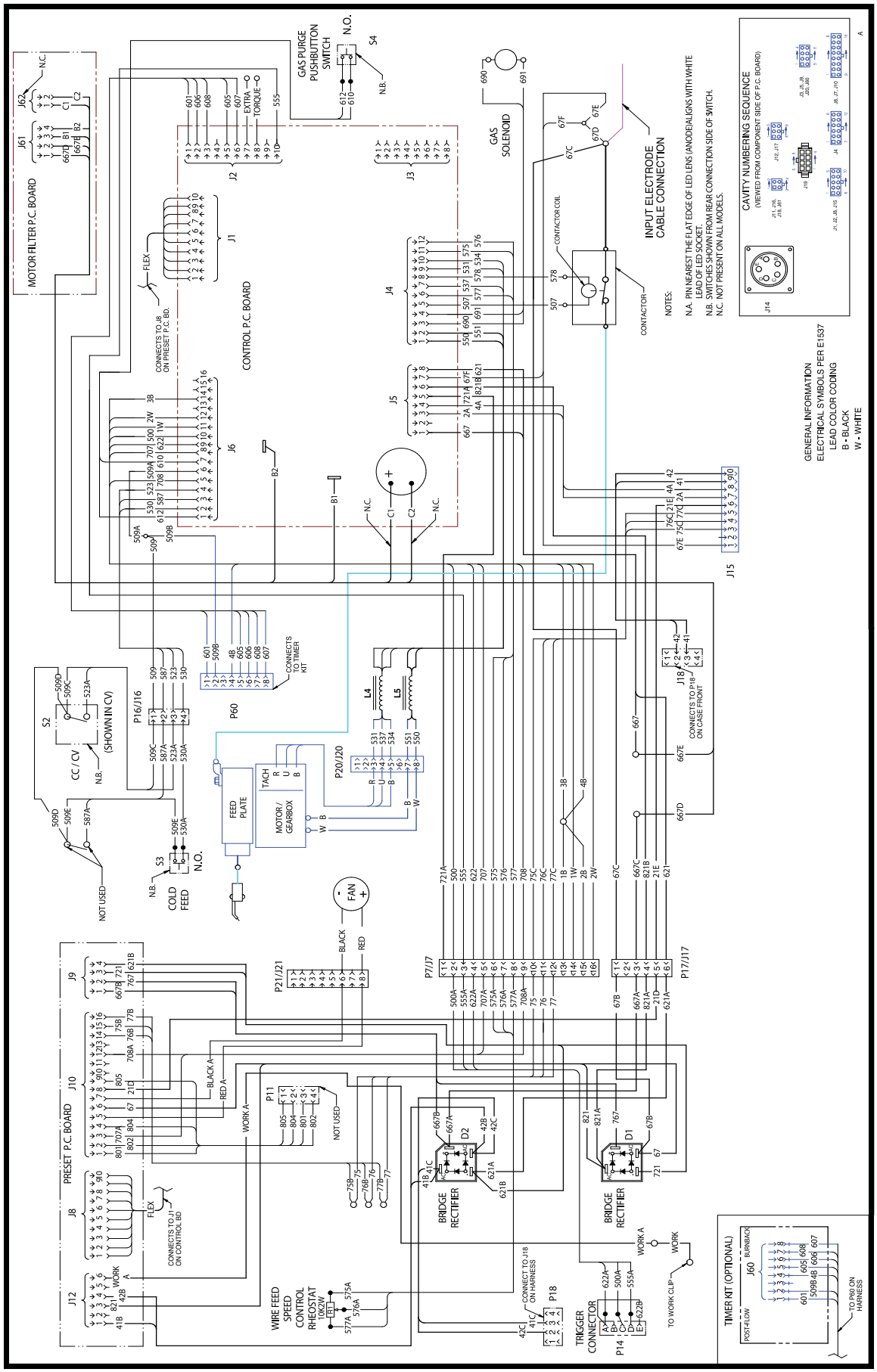

NOTE: This diagram is for reference only. It may not be accurate for all machines covered by this manual. The specific diagram for a particular code is pasted inside the machine on one of the enclosure panels. If the diagram is illegible, write to the Service Department for a replacement. Give the equipment code number.

DIMENSION PRINT

F-2

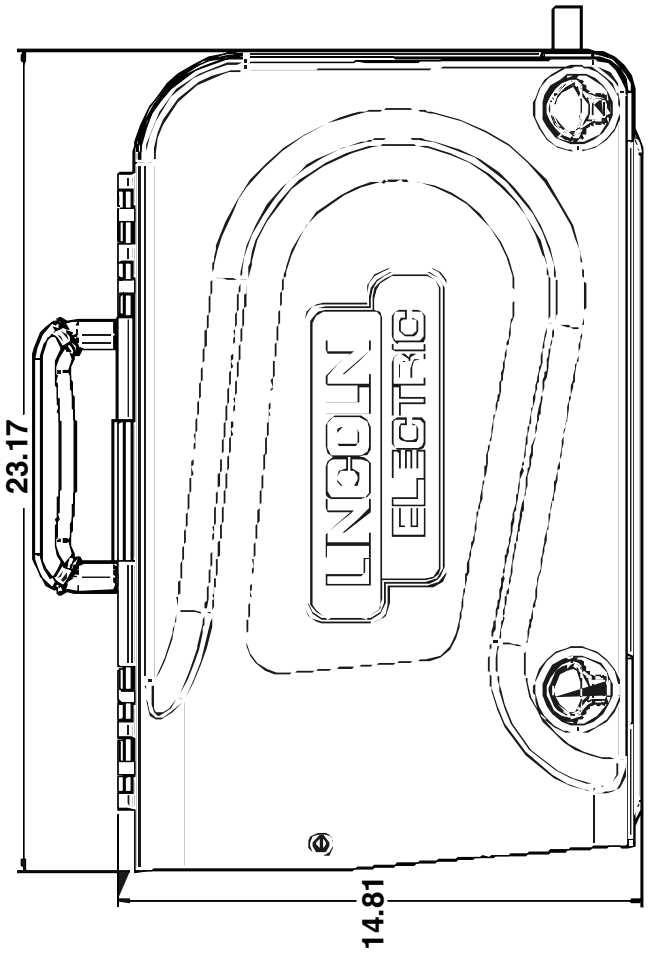

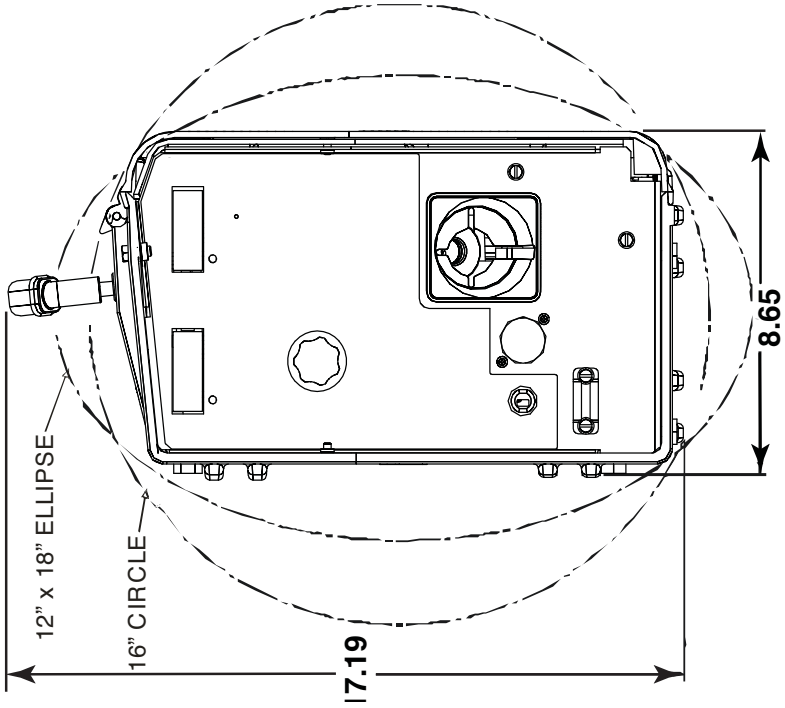

RED-D-ARC LN25™ PRO EXTREME

Red-D-Arc Welderentals

WARNING	● Do not touch electrically live parts or electrode with skin or wet clothing. ● Insulate yourself from work and ground.	● Keep flammable materials away.	● Wear eye, ear and body protection.
Spanish **AVISO DE PRECAUCION**	● No toque las partes o los electrodos bajo carga con la piel o ropa mojada. ● Aislese del trabajo y de la tierra.	● Mantenga el material combustible fuera del área de trabajo.	● Protéjase los ojos, los oídos y el cuerpo.
French **ATTENTION**	● Ne laissez ni la peau ni des vêtements mouillés entrer en contact avec des pièces sous tension. ● Isolez-vous du travail et de la terre.	● Gardez à l'écart de tout matériel inflammable.	● Protégez vos yeux, vos oreilles et votre corps.
German **WARNUNG**	● Berühren Sie keine stromführenden Teile oder Elektroden mit Ihrem Körper oder feuchter Kleidung! ● Isolieren Sie sich von den Elektroden und dem Erdboden!	● Entfernen Sie brennbarres Material!	● Tragen Sie Augen-, Ohren- und Körperschutz!
Portuguese **ATENÇÃO**	● Não toque partes elétricas e electrodos com a pele ou roupa molhada. ● Isole-se da peça e terra.	● Mantenha inflamáveis bem guardados.	● Use proteção para a vista, ouvido e corpo.
Japanese **注意事項**	● 通電中の電気部品、又は溶材にヒフやぬれた布で触れないこと。 ● 施工物やアースから身体が絶縁されている様にして下さい。	● 燃えやすいものの側での溶接作業は絶対にしてはなりません。	● 目、耳及び身体に保護具をして下さい。
Chinese **警 告**	● 皮肤或濕衣物切勿接觸帶電部件及銲條。 ● 使你自己與地面和工件絶緣。	● 把一切易燃物品移離工作場所。	● 佩戴眼、耳及身體勞動保護用具。
Korean **위 험**	● 전도체나 용접봉을 젖은 헝겁 또는 피부로 절대 접촉치 마십시요. ● 모재와 접지를 접촉치 마십시요.	● 인화성 물질을 접근 시키지 마시요.	● 눈, 귀와 몸에 보호장구를 착용하십시요.
Arabic **تحذير**	● لا تلمس الاجزاء التي يسري فيها التيار الكهربائي أو الالكترود بجلد الجسم أو بالملابس المبللة بالماء. ● ضع عازلا على جسمك خلال العمل.	● ضع المواد القابلة للاشتعال في مكان بعيد.	● ضع أدوات وملابس واقية على عينيك وأذنيك وجسمك.

READ AND UNDERSTAND THE MANUFACTURER'S INSTRUCTION FOR THIS EQUIPMENT AND THE CONSUMABLES TO BE USED AND FOLLOW YOUR EMPLOYER'S SAFETY PRACTICES.

SE RECOMIENDA LEER Y ENTENDER LAS INSTRUCCIONES DEL FABRICANTE PARA EL USO DE ESTE EQUIPO Y LOS CONSUMIBLES QUE VA A UTILIZAR, SIGA LAS MEDIDAS DE SEGURIDAD DE SU SUPERVISOR.

LISEZ ET COMPRENEZ LES INSTRUCTIONS DU FABRICANT EN CE QUI REGARDE CET EQUIPMENT ET LES PRODUITS A ETRE EMPLOYES ET SUIVEZ LES PROCEDURES DE SECURITE DE VOTRE EMPLOYEUR.

LESEN SIE UND BEFOLGEN SIE DIE BETRIEBSANLEITUNG DER ANLAGE UND DEN ELEKTRODENEINSATZ DES HERSTELLERS. DIE UNFALLVERHÜTUNGSVORSCHRIFTEN DES ARBEITGEBERS SIND EBENFALLS ZU BEACHTEN.

● Keep your head out of fumes. ● Use ventilation or exhaust to remove fumes from breathing zone.	● Turn power off before servicing.	● Do not operate with panel open or guards off.	**WARNING**
● Los humos fuera de la zona de respiración. ● Mantenga la cabeza fuera de los humos. Utilice ventilación o aspiración para gases.	● Desconectar el cable de alimentación de poder de la máquina antes de iniciar cualquier servicio.	● No operar con panel abierto o guardas quitadas.	Spanish **AVISO DE PRECAUCION**
● Gardez la tête à l'écart des fumées. ● Utilisez un ventilateur ou un aspirateur pour ôter les fumées des zones de travail.	● Débranchez le courant avant l'entretien.	● N'opérez pas avec les panneaux ouverts ou avec les dispositifs de protection enlevés.	French **ATTENTION**
● Vermeiden Sie das Einatmen von Schweibrauch! ● Sorgen Sie für gute Be- und Entlüftung des Arbeitsplatzes!	● Strom vor Wartungsarbeiten abschalten! (Netzstrom völlig öffnen; Maschine anhalten!)	● Anlage nie ohne Schutzgehäuse oder Innenschutzverkleidung in Betrieb setzen!	German **WARNUNG**
● Mantenha seu rosto da fumaça. ● Use ventilação e exhaustão para remover fumo da zona respiratória.	● Não opere com as tampas removidas. ● Desligue a corrente antes de fazer serviço. ● Não toque as partes elétricas nuas.	● Mantenha-se afastado das partes moventes. ● Não opere com os paineis abertos ou guardas removidas.	Portuguese **ATENÇÃO**
● ヒュームから頭を離すようにして下さい。 ● 換気や排煙に十分留意して下さい。	● メンテナンス・サービスに取りかかる際には、まず電源スイッチを必ず切って下さい。	● パネルやカバーを取り外したままで機械操作をしないで下さい。	Japanese **注意事項**
● 頭部遠離煙霧。 ● 在呼吸區使用通風或排風器除煙。	● 維修前切斷電源。	● 儀表板打開或沒有安全罩時不準作業。	Chinese **警 告**
● 얼굴로부터 용접가스를 멀리하십시요. ● 호흡지역으로부터 용접가스를 제거하기 위해 가스제거기나 통풍기를 사용하십시요.	● 보수전에 전원을 차단하십시요.	● 판넬이 열린 상태로 작동치 마십시요.	Korean **위 험**
● ابعد رأسك بعيداً عن الدخان. ● استعمل التهوية أو جهاز ضغط الدخان للخارج لكي تبعد الدخان عن المنطقة التي تتنفس فيها.	● اقطع التيار الكهربائي قبل القيام بأية صيانة.	● لا تشغل هذا الجهاز اذا كانت الاغطية الحديدية الواقية ليست عليه.	Arabic **تحذير**

LEIA E COMPREENDA AS INSTRUÇÕES DO FABRICANTE PARA ESTE EQUIPAMENTO E AS PARTES DE USO, E SIGA AS PRÁTICAS DE SEGURANÇA DO EMPREGADOR.

使う機械や溶材のメーカーの指示書をよく読み、まず理解して下さい。そして貴社の安全規定に従って下さい。

請詳細閱讀並理解製造廠提供的説明以及應該使用的銀捍材料，並請遵守貴方的有関勞動保護規定。

이 제품에 동봉된 작업지침서를 숙지하시고 귀사의 작업자 안전수칙을 준수하시기 바랍니다.

اقرأ بتمعن وافهم تعليمات المصنع المنتج لهذه المعدات والمواد قبل استعمالها واتبع تعليمات الوقاية لصاحب العمل.

LINCOLN ELECTRIC

• World's Leader in Welding and Cutting Products •

• Sales and Service through Subsidiaries and Distributors Worldwide •

Cleveland, Ohio 44117-1199 U.S.A. TEL: 216.481.8100 FAX: 216.486.1751 WEB SITE: www.lincolnelectric.com