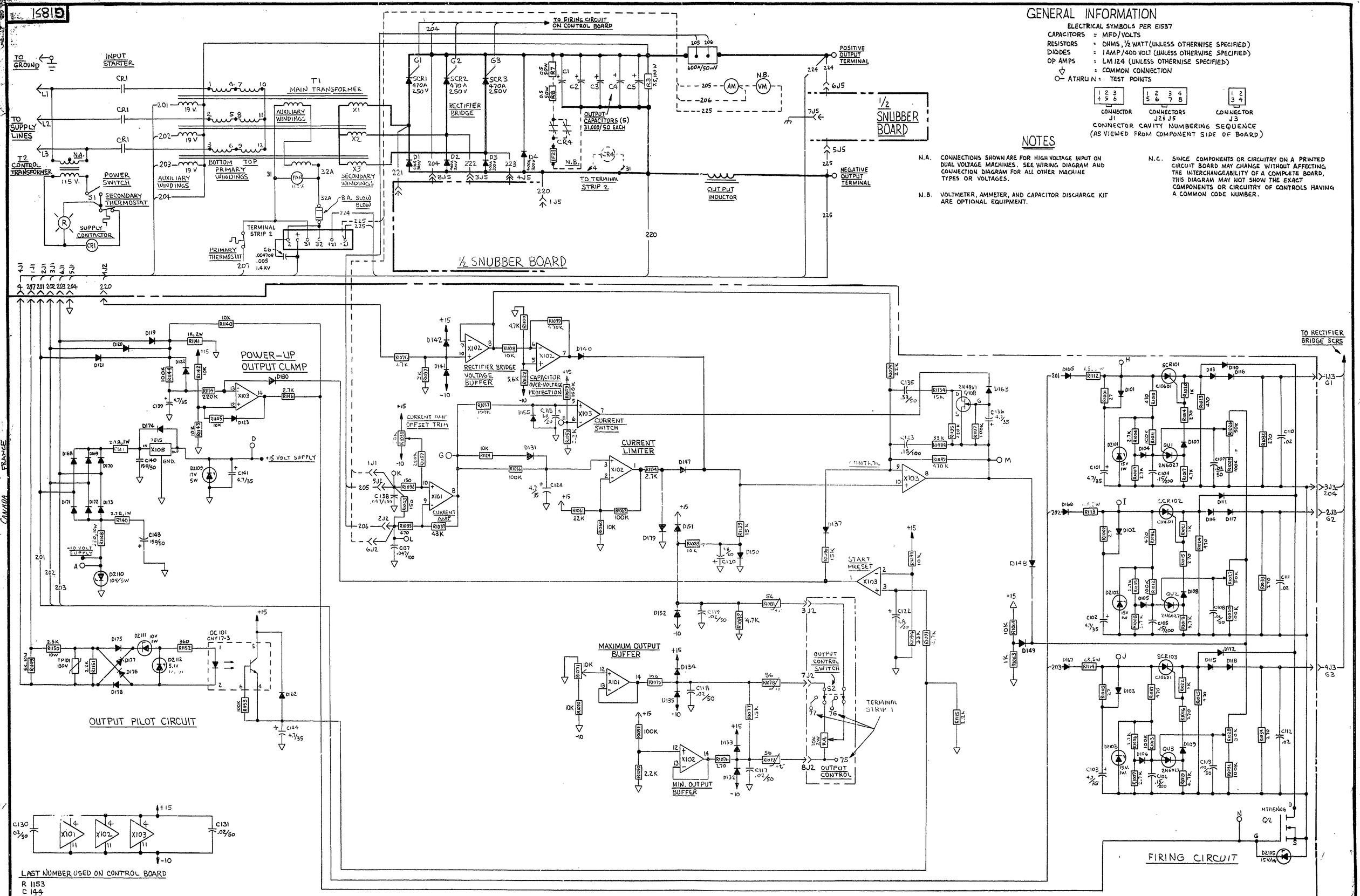

GENERAL INFORMATION

ELECTRICAL SYMBOLS PER E1537

CAPACITORS = MFD/VOLTS
RESISTORS = OHMS, ½ WATT (UNLESS OTHERWISE SPECIFIED)
DIODES = 1 AMP/400 VOLT (UNLESS OTHERWISE SPECIFIED)
OP AMPS = LM 124 (UNLESS OTHERWISE SPECIFIED)
⏚ = COMMON CONNECTION
O— A THRU N = TEST POINTS

CONNECTOR J1 (1 2 3 / 4 5 6) — CONNECTORS J2, J5 (1 2 3 4 / 5 6 7 8) — CONNECTOR J3 (1 2 / 3 4)

CONNECTOR CAVITY NUMBERING SEQUENCE (AS VIEWED FROM COMPONENT SIDE OF BOARD)

NOTES

N.A. CONNECTIONS SHOWN ARE FOR HIGH VOLTAGE INPUT ON DUAL VOLTAGE MACHINES. SEE WIRING DIAGRAM AND CONNECTION DIAGRAM FOR ALL OTHER MACHINE TYPES OR VOLTAGES.

N.B. VOLTMETER, AMMETER, AND CAPACITOR DISCHARGE KIT ARE OPTIONAL EQUIPMENT.

N.C. SINCE COMPONENTS OR CIRCUITRY ON A PRINTED CIRCUIT BOARD MAY CHANGE WITHOUT AFFECTING THE INTERCHANGEABILITY OF A COMPLETE BOARD, THIS DIAGRAM MAY NOT SHOW THE EXACT COMPONENTS OR CIRCUITRY OF CONTROLS HAVING A COMMON CODE NUMBER.

LAST NUMBER USED ON CONTROL BOARD

R 1153
C 144
D 178
DZ 112
Q 108

NOT ALL PRECEEDING NUMBERS MAY BE USED.

UNLESS OTHERWISE SPECIFIED TOLERANCE ON HOLE SIZES PER E-2056 ON 2 PLACE DECIMALS IS ± .02 ON 3 PLACE DECIMALS IS ± .002 ON ALL ANGLES IS ± ½ OF A DEGREE MATERIAL TOLERANCE ("F") TO AGREE WITH PUBLISHED STANDARDS.

Ch. no.	Sht. No.
G-2005	
S-2115	

THE LINCOLN ELECTRIC CO.
CLEVELAND, OHIO U. S. A.

EQUIP. TYPE IDEALARC CV-400
SUBJECT SCHEMATIC
SCALE NONE
DR. JB DATE 11-5-87 CHK. CEC REF. G1820
SHT./NO. G185