Operator's Manual

Power Wave® S700

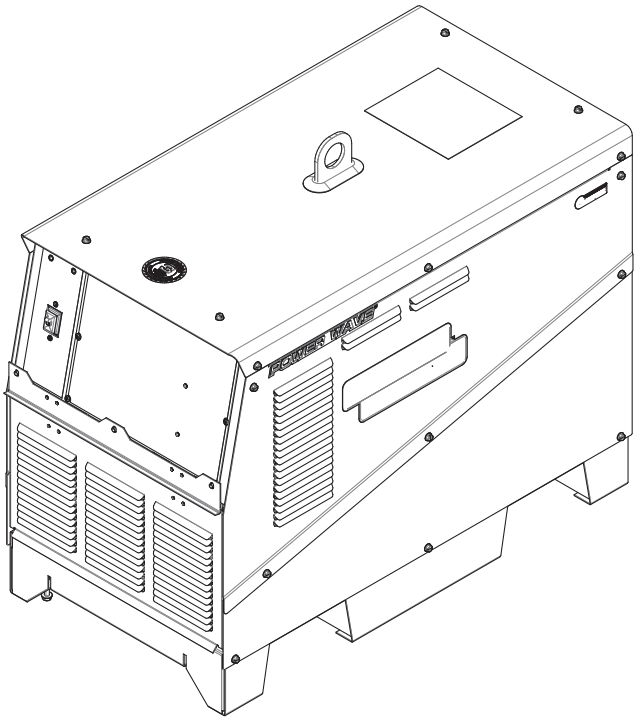

For use with machines having Code Numbers:

11957, 12503*, 12740, 12768, 12784, 13198, 13209*, 13210

GENUINE LINCOLN PARTS™

Register your machine:
www.lincolnelectric.com/register

Authorized Service and Distributor Locator:
www.lincolnelectric.com/locator

Save for future reference

Date Purchased

Code: (ex: 10859)

Serial: (ex: U1060512345)

Need Help? Call 1.888.935.3877
to talk to a Service Representative

Hours of Operation:
8:00 AM to 6:00 PM (ET) Mon. thru Fri.

After hours?
Use "Ask the Experts" at lincolnelectric.com
A Lincoln Service Representative will contact you no later than the following business day.

For Service outside the USA:
Email: globalservice@lincolnelectric.com

* EAC

IM10144-H | Issue Date Jan - 22

© Lincoln Global, Inc. All Rights Reserved.

THE LINCOLN ELECTRIC COMPANY
22801 St. Clair Avenue • Cleveland, OH • 44117-1199 • U.S.A.
Phone: +1.216.481.8100 • www.lincolnelectric.com

THANK YOU FOR SELECTING A QUALITY PRODUCT BY LINCOLN ELECTRIC.

PLEASE EXAMINE CARTON AND EQUIPMENT FOR DAMAGE IMMEDIATELY

When this equipment is shipped, title passes to the purchaser upon receipt by the carrier. Consequently, claims for material damaged in shipment must be made by the purchaser against the transportation company at the time the shipment is received.

SAFETY DEPENDS ON YOU

Lincoln arc welding and cutting equipment is designed and built with safety in mind. However, your overall safety can be increased by proper installation ... and thoughtful operation on your part. **DO NOT INSTALL, OPERATE OR REPAIR THIS EQUIPMENT WITHOUT READING THIS MANUAL AND THE SAFETY PRECAUTIONS CONTAINED THROUGHOUT.** And, most importantly, think before you act and be careful.

⚠ WARNING

This statement appears where the information must be followed exactly to avoid serious personal injury or loss of life.

⚠ CAUTION

This statement appears where the information must be followed to avoid minor personal injury or damage to this equipment.

KEEP YOUR HEAD OUT OF THE FUMES.

DON'T get too close to the arc. Use corrective lenses if necessary to stay a reasonable distance away from the arc.

READ and obey the Safety Data Sheet (SDS) and the warning label that appears on all containers of welding materials.

USE ENOUGH VENTILATION or exhaust at the arc, or both, to keep the fumes and gases from your breathing zone and the general area.

IN A LARGE ROOM OR OUTDOORS, natural ventilation may be adequate if you keep your head out of the fumes (See below).

USE NATURAL DRAFTS or fans to keep the fumes away from your face.

If you develop unusual symptoms, see your supervisor. Perhaps the welding atmosphere and ventilation system should be checked.

WEAR CORRECT EYE, EAR & BODY PROTECTION

PROTECT your eyes and face with welding helmet properly fitted and with proper grade of filter plate (See ANSI Z49.1).

PROTECT your body from welding spatter and arc flash with protective clothing including woolen clothing, flame-proof apron and gloves, leather leggings, and high boots.

PROTECT others from splatter, flash, and glare with protective screens or barriers.

IN SOME AREAS, protection from noise may be appropriate.

BE SURE protective equipment is in good condition.

Also, wear safety glasses in work area **AT ALL TIMES.**

SPECIAL SITUATIONS

DO NOT WELD OR CUT containers or materials which previously had been in contact with hazardous substances unless they are properly cleaned. This is extremely dangerous.

DO NOT WELD OR CUT painted or plated parts unless special precautions with ventilation have been taken. They can release highly toxic fumes or gases.

Additional precautionary measures

PROTECT compressed gas cylinders from excessive heat, mechanical shocks, and arcs; fasten cylinders so they cannot fall.

BE SURE cylinders are never grounded or part of an electrical circuit.

REMOVE all potential fire hazards from welding area.

ALWAYS HAVE FIRE FIGHTING EQUIPMENT READY FOR IMMEDIATE USE AND KNOW HOW TO USE IT.

SECTION A: WARNINGS

CALIFORNIA PROPOSITION 65 WARNINGS

WARNING: Breathing diesel engine exhaust exposes you to chemicals known to the State of California to cause cancer and birth defects, or other reproductive harm.

- Always start and operate the engine in a well-ventilated area.
- If in an exposed area, vent the exhaust to the outside.
- Do not modify or tamper with the exhaust system.
- Do not idle the engine except as necessary.

For more information go to www.P65 warnings.ca.gov/diesel

WARNING: This product, when used for welding or cutting, produces fumes or gases which contain chemicals known to the State of California to cause birth defects and, in some cases, cancer. (California Health & Safety Code § 25249.5 *et seq.)*

WARNING: Cancer and Reproductive Harm www.P65warnings.ca.gov

ARC WELDING CAN BE HAZARDOUS. PROTECT YOURSELF AND OTHERS FROM POSSIBLE SERIOUS INJURY OR DEATH. KEEP CHILDREN AWAY. PACEMAKER WEARERS SHOULD CONSULT WITH THEIR DOCTOR BEFORE OPERATING.

Read and understand the following safety highlights. For additional safety information, it is strongly recommended that you purchase a copy of "Safety in Welding & Cutting - ANSI Standard Z49.1" from the American Welding Society, P.O. Box 351040, Miami, Florida 33135 or CSA Standard W117.2. A Free copy of "Arc Welding Safety" booklet E205 is available from the Lincoln Electric Company, 22801 St. Clair Avenue, Cleveland, Ohio 44117-1199.

BE SURE THAT ALL INSTALLATION, OPERATION, MAINTENANCE AND REPAIR PROCEDURES ARE PERFORMED ONLY BY QUALIFIED INDIVIDUALS.

FOR ENGINE POWERED EQUIPMENT.

1.a. Turn the engine off before troubleshooting and maintenance work unless the maintenance work requires it to be running.

1.b. Operate engines in open, well-ventilated areas or vent the engine exhaust fumes outdoors.

1.c. Do not add the fuel near an open flame welding arc or when the engine is running. Stop the engine and allow it to cool before refueling to prevent spilled fuel from vaporizing on contact with hot engine parts and igniting. Do not spill fuel when filling tank. If fuel is spilled, wipe it up and do not start engine until fumes have been eliminated.

1.d. Keep all equipment safety guards, covers and devices in position and in good repair. Keep hands, hair, clothing and tools away from V-belts, gears, fans and all other moving parts when starting, operating or repairing equipment.

1.e. In some cases it may be necessary to remove safety guards to perform required maintenance. Remove guards only when necessary and replace them when the maintenance requiring their removal is complete. Always use the greatest care when working near moving parts.

1.f. Do not put your hands near the engine fan. Do not attempt to override the governor or idler by pushing on the throttle control rods while the engine is running.

1.g. To prevent accidentally starting gasoline engines while turning the engine or welding generator during maintenance work, disconnect the spark plug wires, distributor cap or magneto wire as appropriate.

1.h. To avoid scalding, do not remove the radiator pressure cap when the engine is hot.

1.i. Using a generator indoors CAN KILL YOU IN MINUTES.

1.j. Generator exhaust contains carbon monoxide. This is a poison you cannot see or smell.

1.k. NEVER use inside a home or garage, EVEN IF doors and windows are open.

1.l. Only use OUTSIDE and far away from windows, doors and vents.

1.m. Avoid other generator hazards. READ MANUAL BEFORE USE.

ELECTRIC AND MAGNETIC FIELDS MAY BE DANGEROUS

2.a. Electric current flowing through any conductor causes localized Electric and Magnetic Fields (EMF). Welding current creates EMF fields around welding cables and welding machines

2.b. EMF fields may interfere with some pacemakers, and welders having a pacemaker should consult their physician before welding.

2.c. Exposure to EMF fields in welding may have other health effects which are now not known.

2.d. All welders should use the following procedures in order to minimize exposure to EMF fields from the welding circuit:

2.d.1. Route the electrode and work cables together - Secure them with tape when possible.

2.d.2. Never coil the electrode lead around your body.

2.d.3. Do not place your body between the electrode and work cables. If the electrode cable is on your right side, the work cable should also be on your right side.

2.d.4. Connect the work cable to the workpiece as close as possible to the area being welded.

2.d.5. Do not work next to welding power source.

ELECTRIC SHOCK CAN KILL.

3.a. The electrode and work (or ground) circuits are electrically “hot” when the welder is on. Do not touch these “hot” parts with your bare skin or wet clothing. Wear dry, hole-free gloves to insulate hands.

3.b. Insulate yourself from work and ground using dry insulation. Make certain the insulation is large enough to cover your full area of physical contact with work and ground.

In addition to the normal safety precautions, if welding must be performed under electrically hazardous conditions (in damp locations or while wearing wet clothing; on metal structures such as floors, gratings or scaffolds; when in cramped positions such as sitting, kneeling or lying, if there is a high risk of unavoidable or accidental contact with the workpiece or ground) use the following equipment:

- Semiautomatic DC Constant Voltage (Wire) Welder.
- DC Manual (Stick) Welder.
- AC Welder with Reduced Voltage Control.

3.c. In semiautomatic or automatic wire welding, the electrode, electrode reel, welding head, nozzle or semiautomatic welding gun are also electrically “hot”.

3.d. Always be sure the work cable makes a good electrical connection with the metal being welded. The connection should be as close as possible to the area being welded.

3.e. Ground the work or metal to be welded to a good electrical (earth) ground.

3.f. Maintain the electrode holder, work clamp, welding cable and welding machine in good, safe operating condition. Replace damaged insulation.

3.g. Never dip the electrode in water for cooling.

3.h. Never simultaneously touch electrically “hot” parts of electrode holders connected to two welders because voltage between the two can be the total of the open circuit voltage of both welders.

3.i. When working above floor level, use a safety belt to protect yourself from a fall should you get a shock.

3.j. Also see Items 6.c. and 8.

ARC RAYS CAN BURN.

4.a. Use a shield with the proper filter and cover plates to protect your eyes from sparks and the rays of the arc when welding or observing open arc welding. Headshield and filter lens should conform to ANSI Z87. I standards.

4.b. Use suitable clothing made from durable flame-resistant material to protect your skin and that of your helpers from the arc rays.

4.c. Protect other nearby personnel with suitable, non-flammable screening and/or warn them not to watch the arc nor expose themselves to the arc rays or to hot spatter or metal.

FUMES AND GASES CAN BE DANGEROUS.

5.a. Welding may produce fumes and gases hazardous to health. Avoid breathing these fumes and gases. When welding, keep your head out of the fume. Use enough ventilation and/or exhaust at the arc to keep fumes and gases away from the breathing zone. **When welding hardfacing (see instructions on container or SDS) or on lead or cadmium plated steel and other metals or coatings which produce highly toxic fumes, keep exposure as low as possible and within applicable OSHA PEL and ACGIH TLV limits using local exhaust or mechanical ventilation unless exposure assessments indicate otherwise. In confined spaces or in some circumstances, outdoors, a respirator may also be required. Additional precautions are also required when welding on galvanized steel.**

5. b. The operation of welding fume control equipment is affected by various factors including proper use and positioning of the equipment, maintenance of the equipment and the specific welding procedure and application involved. Worker exposure level should be checked upon installation and periodically thereafter to be certain it is within applicable OSHA PEL and ACGIH TLV limits.

5.c. Do not weld in locations near chlorinated hydrocarbon vapors coming from degreasing, cleaning or spraying operations. The heat and rays of the arc can react with solvent vapors to form phosgene, a highly toxic gas, and other irritating products.

5.d. Shielding gases used for arc welding can displace air and cause injury or death. Always use enough ventilation, especially in confined areas, to insure breathing air is safe.

5.e. Read and understand the manufacturer’s instructions for this equipment and the consumables to be used, including the Safety Data Sheet (SDS) and follow your employer’s safety practices. SDS forms are available from your welding distributor or from the manufacturer.

5.f. Also see item 1.b.

WELDING AND CUTTING SPARKS CAN CAUSE FIRE OR EXPLOSION.

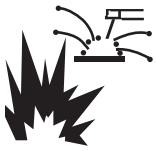

6.a. Remove fire hazards from the welding area. If this is not possible, cover them to prevent the welding sparks from starting a fire. Remember that welding sparks and hot materials from welding can easily go through small cracks and openings to adjacent areas. Avoid welding near hydraulic lines. Have a fire extinguisher readily available.

6.b. Where compressed gases are to be used at the job site, special precautions should be used to prevent hazardous situations. Refer to “Safety in Welding and Cutting” (ANSI Standard Z49.1) and the operating information for the equipment being used.

6.c. When not welding, make certain no part of the electrode circuit is touching the work or ground. Accidental contact can cause overheating and create a fire hazard.

6.d. Do not heat, cut or weld tanks, drums or containers until the proper steps have been taken to insure that such procedures will not cause flammable or toxic vapors from substances inside. They can cause an explosion even though they have been “cleaned”. For information, purchase “Recommended Safe Practices for the Preparation for Welding and Cutting of Containers and Piping That Have Held Hazardous Substances”, AWS F4.1 from the American Welding Society (see address above).

6.e. Vent hollow castings or containers before heating, cutting or welding. They may explode.

6.f. Sparks and spatter are thrown from the welding arc. Wear oil free protective garments such as leather gloves, heavy shirt, cuffless trousers, high shoes and a cap over your hair. Wear ear plugs when welding out of position or in confined places. Always wear safety glasses with side shields when in a welding area.

6.g. Connect the work cable to the work as close to the welding area as practical. Work cables connected to the building framework or other locations away from the welding area increase the possibility of the welding current passing through lifting chains, crane cables or other alternate circuits. This can create fire hazards or overheat lifting chains or cables until they fail.

6.h. Also see item 1.c.

6.I. Read and follow NFPA 51B “Standard for Fire Prevention During Welding, Cutting and Other Hot Work”, available from NFPA, 1 Batterymarch Park, PO box 9101, Quincy, MA 022690-9101.

6.j. Do not use a welding power source for pipe thawing.

CYLINDER MAY EXPLODE IF DAMAGED.

7.a. Use only compressed gas cylinders containing the correct shielding gas for the process used and properly operating regulators designed for the gas and pressure used. All hoses, fittings, etc. should be suitable for the application and maintained in good condition.

7.b. Always keep cylinders in an upright position securely chained to an undercarriage or fixed support.

7.c. Cylinders should be located:

- Away from areas where they may be struck or subjected to physical damage.
- A safe distance from arc welding or cutting operations and any other source of heat, sparks, or flame.

7.d. Never allow the electrode, electrode holder or any other electrically “hot” parts to touch a cylinder.

7.e. Keep your head and face away from the cylinder valve outlet when opening the cylinder valve.

7.f. Valve protection caps should always be in place and hand tight except when the cylinder is in use or connected for use.

7.g. Read and follow the instructions on compressed gas cylinders, associated equipment, and CGA publication P-I, “Precautions for Safe Handling of Compressed Gases in Cylinders,” available from the Compressed Gas Association, 14501 George Carter Way Chantilly, VA 20151.

FOR ELECTRICALLY POWERED EQUIPMENT.

8.a. Turn off input power using the disconnect switch at the fuse box before working on the equipment.

8.b. Install equipment in accordance with the U.S. National Electrical Code, all local codes and the manufacturer’s recommendations.

8.c. Ground the equipment in accordance with the U.S. National Electrical Code and the manufacturer’s recommendations.

Refer to http://www.lincolnelectric.com/safety for additional safety information.

ECO design information

The equipment has been designed in order to be compliant with the Directive 2009/125/EC and the Regulation 2019/1784/EU.

Efficiency and idle power consumption:

Name	Efficiency when max power consumption / Idle power consumption	Equivalent model
Power Wave S700 CE with / K2444 Filter	87% / 196W	No equivalent model

Idle state, follow instructions to test idle mode:

1. Connect an Ethernet cable from the port on the machine to a laptop and start up the machine.
2. Open the Power Wave Manager and configure the connection to the machine that is plugged in through the Ethernet.
3. Check the box for the 'System Hibernation Timer' to allow the machine to enter hibernation mode. Set the Hibernation Timer to 15 minutes (the lowest it can go). Wait 15 minutes and once the fans stop spinning the machine is in Hibernate Mode (Idle State).
4. The machine needs to be turned off and back on to come out of the hibernation mode

Efficiency;

The Efficiency procedure itself requires the use of a grid. Power Wave Manager can be downloaded from powerwavesoftware.com along with the Power Wave Manager instruction. The Power Wave Manager instructions explain how to test a machine using a resistive load. This is described in section 6 under calibration.

The value of efficiency and consumption in idle state have been measured by method and conditions defined in the product standard EN 60974-1

Manufacturer's name, product name, code number, product number, serial number and date of production can be read from rating plate and serial number label.

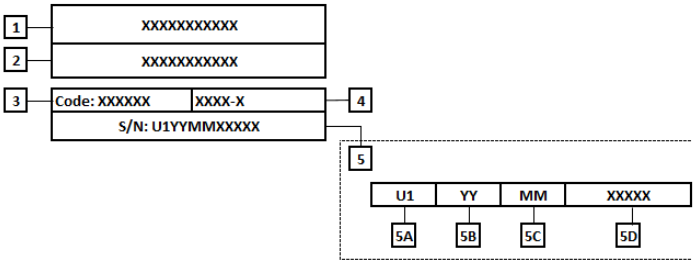

Where:

1- Manufacturer name and adress
2- Product name
3- Code number
4- Product number
5- Serial number
5A- country of production
5B- year of production
5C- month of production
5D- progressive number different for each machine

Typical gas usage for **MIG/MAG** equipment:

Material type	Wire diameter [mm]	DC electrode positive		Wire Feeding [m/min]	Shielding Gas	Gas flow [l/min]
		Current [A]	Voltage [V]			
Carbon, low alloy steel	0,9 - 1,1	95 - 200	18 - 22	3,5 – 6,5	Ar 75%, CO_2 25%	12
Aluminum	0,8 - 1,6	90 - 240	18 - 26	5,5 – 9,5	Argon	14 - 19
Austenitic stainless steel	0,8 - 1,6	85 - 300	21 - 28	3 - 7	Ar 98%, O_2 2% / He 90%, Ar 7,5% CO_2 2,5%	14 - 16
Copper alloy	0,9 - 1,6	175 - 385	23 - 26	6 - 11	Argon	12 - 16
Magnesium	1,6 - 2,4	70 - 335	16 - 26	4 - 15	Argon	24 - 28

Tig Process:

In TIG welding process, gas usage depends on cross-sectional area of the nozzle. For comonly used torches:
Helium: 14-24 l/min
Argon: 7-16 l/min
Notice: Excessive flow rates causes turbulence in the gas stream which may aspirate atmospheric contaminantion into the welding pool.

Notice: A cross wind or draft moving can disrupt the shielding gas coverage, in the interest of saving of protective gas use screen to block air flow.

End of life

At end of life of product, it has to be disposal for recycling in accordance with Directive 2012/19/EU (WEEE), information about the dismantling of product and Critical Raw Material (CRM) present in the product, can be found at: www.lincolnelectriceurope.com

S700 CE

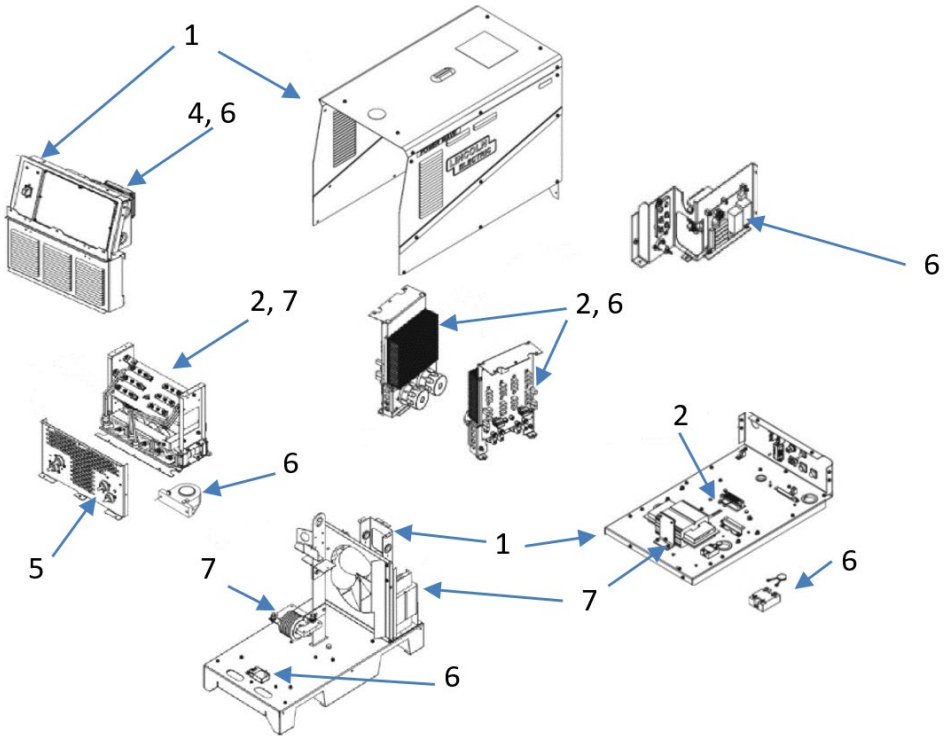

Item	Component	Material for recovery	CRM	Selective treatment
1	Enclosure	Steel	-	-
2	Heat sink	Aluminum	Si, 51 g Mg, 85 g	-
3	External cables – not shown	Copper	-	Required
4	Capacitor	-	-	Required
5	Output terminal, 4 total	Brass, copper	-	-
6	PC board	-	-	Required
7	Choke Internal cables Transformer	Copper	-	-

Reference: P-895-A, code 12503

TABLE OF CONTENTS

Page

Installation ..... Section A
Technical Specifications A-1, A-2
Safety Precautions A-3
Suitable Location, Lifting A-3
Stacking A-3
Tilting A-3
Input and Ground Connections A-3
Machine Grounding A-3
Input Connection A-4
Input Fuse and Supply Wire A-4
Input Voltage Selection A-4
Reconnect Diagram A-5
High Frequency Protection A-5
System Overview and Connection Diagram A-5
Connection Diagram ..... A-6 thru A-13
Recommended Work Cable Sizes A-14
Output Cable Guidelines A-15
Cable Inductance and its Effects on Welding A-16
Remote Sense Lead Specifications A-16
Voltage Sensing Considerations for Multiple Arc Systems A-17
Circumferential Applications A-18
Control Cable Connections A-19

Operation ..... Section B
Safety Precautions B-1
Power-Up Sequence B-1
Duty Cycle B-1
Graphic Symbols B-1, B-2
Product Description B-3
Recommended Processes and Equipment B-3
Equipment Limitations B-3
Design Features B-4
Case Front Controls B-5
Case Back Controls B-6
Common Welding Procedures ..... B-7 thru B-9

Accessories ..... Section C
Kits, Options / Accessories C-1
Field Installed Options C-1

Maintenance ..... Section D
Safety Precautions D-1
Visual Inspection D-1
Routine Maintenance D-1
Periodic Maintenance D-1
Calibration Specification D-1

Troubleshooting ..... Section E
Safety Precautions E-1
How to Use Troubleshooting Guide E-1
Using Status LED, Error Fault Codes and Input Control Board E-2, E-3
Troubleshooting Guide E-4, E-5

Wiring Diagram and Dimension Print ..... Section F

Parts Pages ..... P-721 Series

TECHNICAL SPECIFICATIONS - POWER WAVE® S700

POWER SOURCE-INPUT VOLTAGE AND CURRENT					
Model	Duty Cycle	Input Voltage ± 10%	Input Amperes	Idle Power (Watts)	Power Factor @ Rated Output
K3279-1 K3279-2 K3535-1	100% rating	380-415/440-460/500/575	55/46/42/38	205W Fan Off 360W Fan On	.95
K3557-1	100% rating	200/230	106/92	186W Fan Off 347W Fan On	.95

RATED OUTPUT				
Process	Duty Cycle	Amperes	Volts at Rated Amperes	OCV (U0)
GMAW	60%	900A	44V	70V AVG. 85V PEAK
	100%	700A		
GMAW-P	60%	900A		70V AVG. 85V PEAK
	100%	700A		
GTAW	60%	900A	34V	24V AVG. 27V PEAK
	100%	700A		
SMAW	60%	900A	44V	50V AVG. 65V PEAK
	100%	700A		
FCAW-GS	60%	900A		70V AVG. 85V PEAK
	100%	700A		
FCAW-SS	60%	900A		70V AVG. 85V PEAK
	100%	700A		

RECOMMENDED INPUT WIRE AND FUSE SIZES [1]				
	INPUT VOLTAGE / 3 PHASE/ FREQUENCY	Maximum Input Amperes	Type 75C Copper Wire in Conduit AWG (IEC) Sizes 40C (104°F) Ambient	TIME DELAY FUSE OR BREAKER [2] AMPERAGE
K3279-1 K3279-2 K3535-1	380/3/50 460/3/60 500/3/60 575/3/60	75 62 57 50	6 (16) 6 (16) 8 (10) 8 (10)	90 80 70 60
K3557-1	200V/3/50/60 230V/3/50/60	140 120	1 (35) 2 (35)	175 150

1. Based on U.S. National electrical Code
2. Also called " inverse time" or "thermal / magnetic" circuit breakers; circuit breakers that have a delay in tripping action that decreases as the magnitude of the current increases.

PHYSICAL DIMENSIONS				
MODEL	HEIGHT	WIDTH	DEPTH	WEIGHT
K3279-1* K3279-2* K3557-1	30.10 in (76.5 cm)	19.1 in (48.5 cm)	36.7 in (93.2 cm)	400 lbs (181 kg)
K3535-1	30.10 in (76.5 cm)	19.1 in (48.5 cm)	40.0 in (101.7 cm)	430 lbs (195 kg)

TEMPERATURE RANGES	
OPERATING TEMPERATURE RANGE Environmentally Hardened: -4°F to 104°F (-20C to 40C)	**STORAGE TEMPERATURE RANGE** Environmentally Hardened: -40°F to 185°F (-40C to 85C)

IP23 155º(F) Insulation Class

* An External filter will be required to meet CE or C-TICK / RCM conducted emission requirements. Order K2444-4 filter kit to meet these requirements.

Thermal tests have been performed at ambient temperature. The duty cycle (duty factor) at 40°C has been determined by simulation.

SAFETY PRECAUTIONS Read this entire installation section before you start installation.

WARNING

ELECTRIC SHOCK can kill.

- **Only qualified personnel should perform this installation.**
- **Turn the input power OFF at the disconnect switch or fuse box before working on this equipment. Turn off the input power to any other equipment connected to the welding system at the disconnect switch or fuse box before working on the equipment.**
- **Do not touch electrically hot parts.**
- **Always connect the POWER WAVE® S700 grounding lug (located inside the reconnect input access door) to a proper safety (Earth) ground.**

SUITABLE LOCATION

Location and ventilation for cooling

Place the welder where clean cooling air can freely circulate in through the rear louvers and out through the case sides and front. Dirt, dust, or any foreign material that can be drawn into the welder should be kept at a minimum. The use of air filters on the air intake is not recommended because normal air flow may be restricted. Failure to observe these precautions can result in excessive operating temperatures and nuisance shutdowns.

- Place the welder where clean cooling air can freely circulate in through the rear louvers and out through the case sides and front.
- Dirt, dust, or any foreign material that can be drawn into the welder should be kept at a minimum. The use of air filters on the air intake is not recommended because normal air flow may be restricted. Failure to observe these precautions can result in excessive operating temperatures and nuisance shutdowns.
- The best practice is to keep the machine in a dry, sheltered area.

Environmental limitations

The Power Wave® S700 is IP23 rated for use in an outdoor environment. The Power Wave® S700 should not be subjected to falling water during use nor should any parts of it be submerged in water. Doing so may cause improper operation as well as pose a safety hazard. The best practice is to keep the machine in a dry, sheltered area.

- Do not mount the POWER WAVE® S700 over combustible surfaces. Where there is a combustible surface directly under stationary or fixed electrical equipment, that surface shall be covered with a steel plate at least .060” (1.6mm) thick, which shall extend not less than 5.90” (150mm) beyond the equipment on all sides.

LIFTING

Lift the machine by the lift bail only. The lift bail is designed to lift the power source only. Do not attempt to lift the Power Wave® S700 with accessories attached to it.

WARNING

- **Lift only with equipment of adequate lifting capacity.**
- **Be sure machine is stable when lifting.**
- **Do not operate machine while suspended when lifting.**

FALLING EQUIPMENT can cause injury.

STACKING

The POWER WAVE® S700 cannot be stacked.

INPUT AND GROUND CONNECTIONS

Only a qualified electrician should connect the Power Wave® S700. Installation should be made in accordance with the appropriate National Electrical Code, all local codes and the information in this manual.

MACHINE GROUNDING

The frame of the welder must be grounded. A ground terminal marked with the symbol shown is located inside the reconnect/input access door for this purpose.

See your local and national electrical codes for proper grounding methods.

RECONNECT DIAGRAM FOR K3279-1

INPUT CONNECTION

⚠ WARNING

ELECTRIC SHOCK can kill.

Only a qualified electrician should connect the input leads to the POWER WAVE® S700. Connections should be made in accordance with all local and national electrical codes and the connection diagrams located on the inside of the reconnect/input access door of the machine. Failure to do so may result in bodily injury or death.

(See Figure A.1)

Use a three-phrase supply line. A 1.75 inch diameter access hole with strain relief is located on the case back. Route input power cable through this hole and connect L1, L2, L3 and ground per connection diagrams and National Electric Code. To access the input power connection block, remove two screws holding the access door to the side of the machine.

ALWAYS CONNECT THE POWER WAVE **GROUNDING LUG** (LOCATED AS SHOWN IN FIGURE A.1) TO A PROPER SAFETY (EARTH) GROUND.

Input Power Compartment Controls Description:

1. **Input Contactor:** Connects 3-phase power to the welder.
2. **Ground Lug:** Provides an “Earth Ground” connection to the welder frame.
3. **Auxiliary Reconnect:** Allows for easy tap selection on the auxiliary transformers over the range of input voltages.
4. **Fuse:** Protects the auxiliary transformers.

INPUT FUSE AND SUPPLY WIRE CONSIDERATIONS

Refer to Specification Section for recommended fuse, wire sizes and type of the copper wires. Fuse the input circuit with the recommended super lag fuse or delay type breakers (also called "inverse time" or "thermal/magnetic" circuit breakers). Choose input and grounding wire size according to local or national electrical codes. Using input wire sizes, fuses or circuit breakers smaller than recommended may result in "nuisance" shut-offs from welder inrush currents, even if the machine is not being used at high currents.

INPUT VOLTAGE SELECTION

Welders are shipped connected for the highest input voltage listed on the rating plate. To move this connection to a different input voltage, see the diagram located on the inside of the input access door, also illustrated below. If the Auxiliary lead (indicated as ‘A’) is placed in the wrong position, there are two possible results. If the lead is placed in a position higher than the applied line voltage, the welder may not come on at all. If the Auxiliary lead is placed in a position lower than the applied line voltage, the welder will not come on, and the two circuit breakers in the reconnect area will open. If this occurs, turn off the input voltage, properly connect the auxiliary lead, reset the breakers, and try again

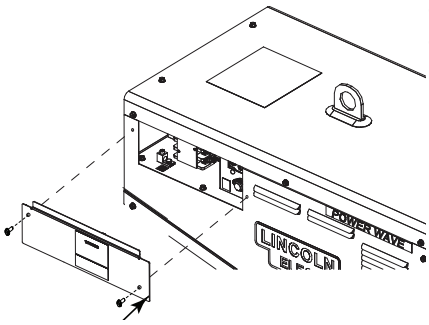

K3279-1 and K3279-2

FIGURE A.1

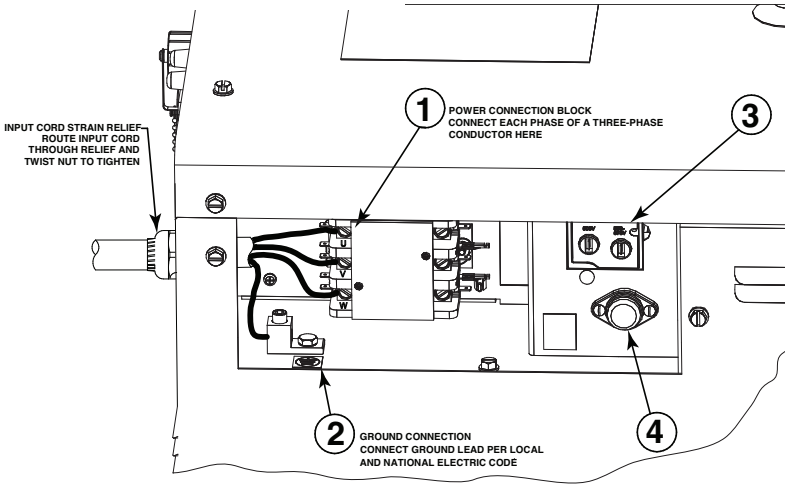

K3557-1

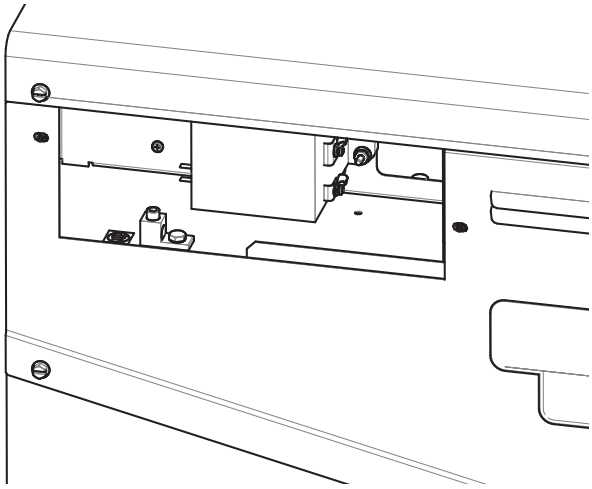

AND K3279-2

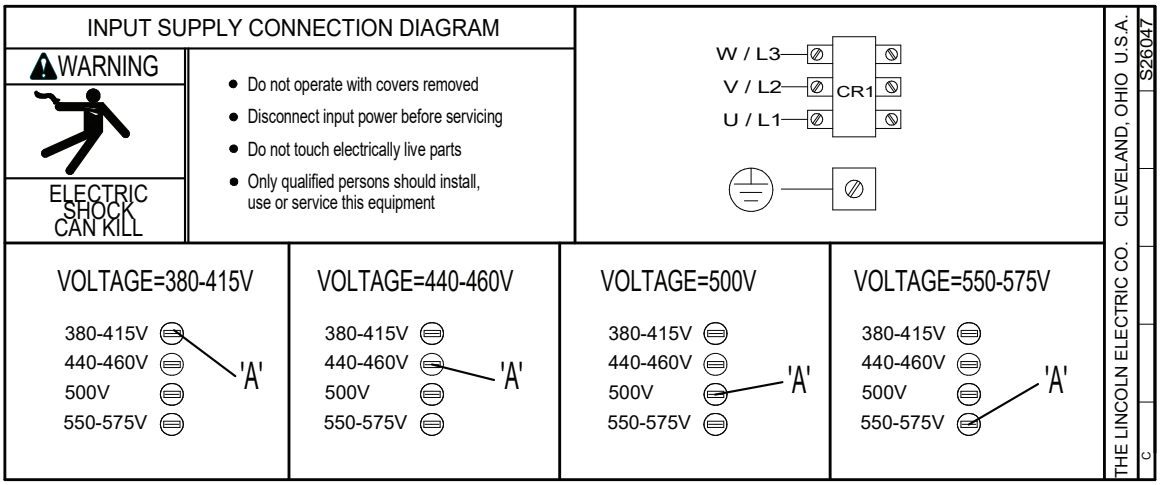

RECONNECT DIAGRAM FOR K3557-1

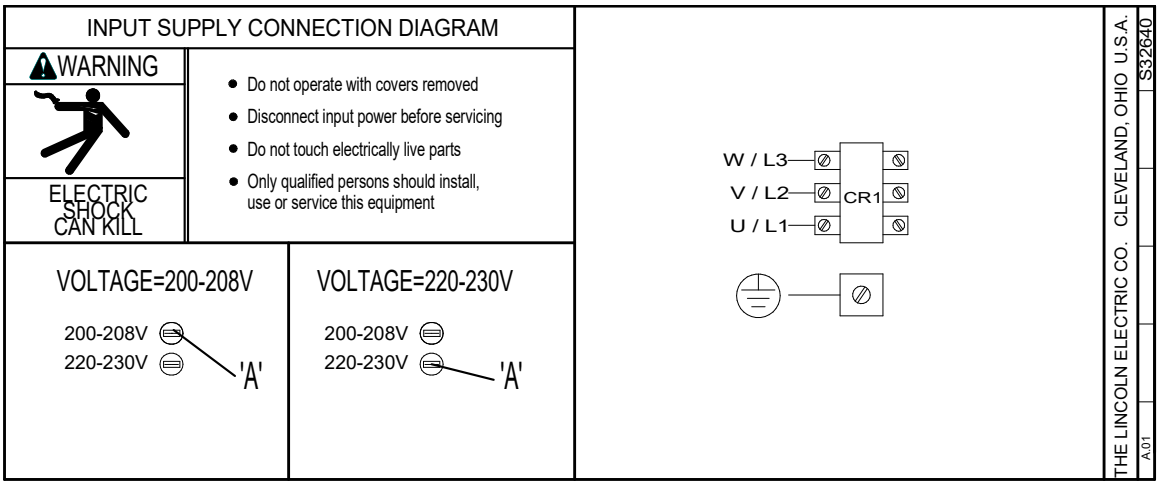

HIGH FREQUENCY PROTECTION

This equipment is for industrial use only and it is not intended for use in residential locations where the electrical power is provided by the public low-voltage supply system. There can be potential difficulties in residential locations due to conducted as well as radiated radio-frequency disturbances. The EMC or RF classification of this equipment is Class A.

Locate the Power Wave® S700 away from radio controlled machinery. The normal operation of the Power Wave® S700 may adversely affect the operation of RF controlled equipment, which may result in bodily injury or damage to the equipment.

SYSTEM OVERVIEW AND CONNECTION DIAGRAM

GTAW (TIG) Welding

A user interface is required for adjusting the TIG welding settings. An S700 user interface (K3362-1) can be installed into the power source. A Power Feed series wire feeder may also be used as a user interface. Refer to the connection diagrams based on the user interface that is being used.

SMAW (Stick) Welding

A user interface is required for adjusting the stick welding settings. An S700 user interface (K3362-1) can be installed into the power source. A Power Feed series wire feeder may also be used as a user interface. Refer to the connection diagrams based on the user interface that is being used.

GMAW (MIG) Welding

An ArcLink compatible wire feeder is required for MIG welding.

MIG PROCESS

FIGURE A.2

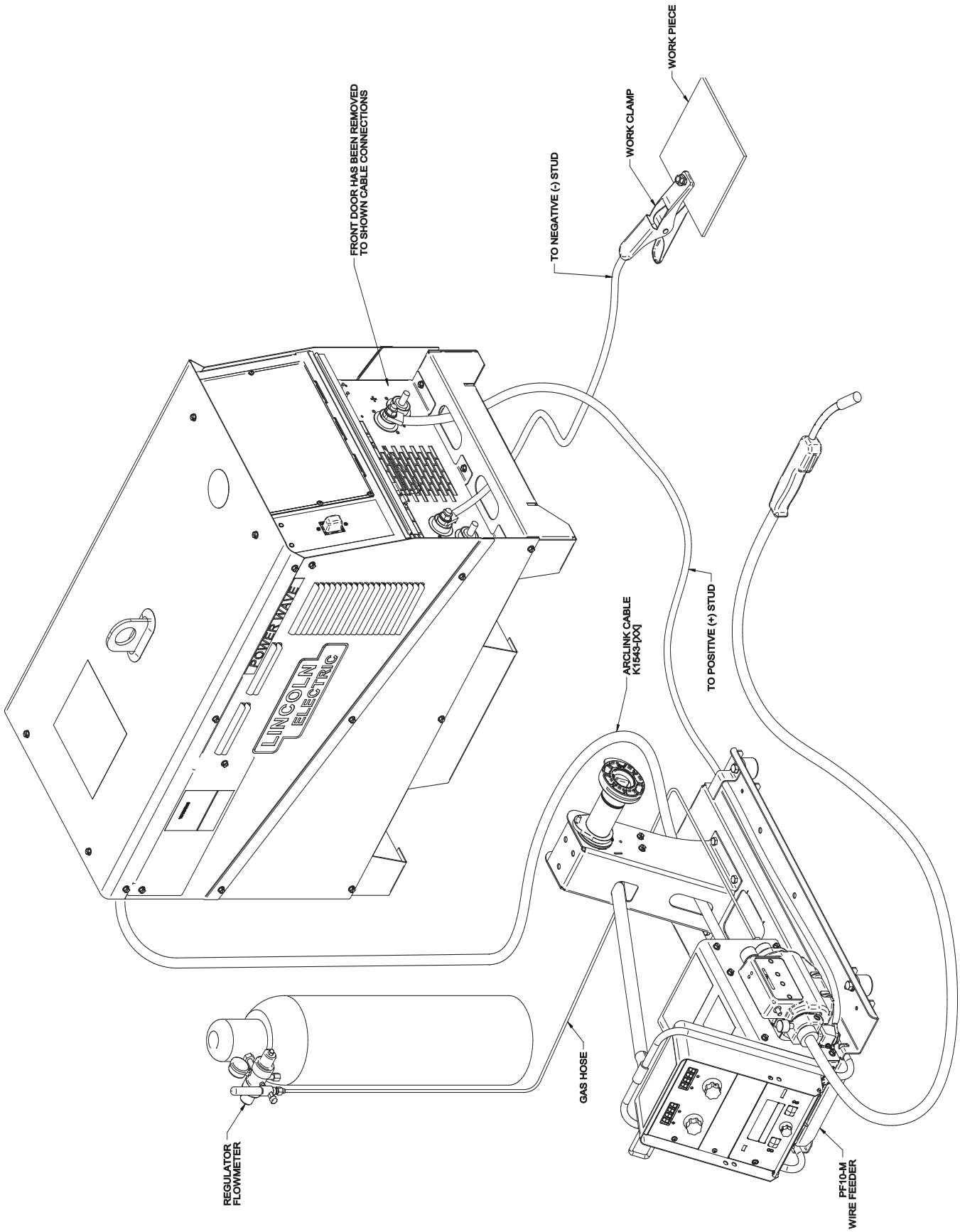

STICK PROCESS

FIGURE A.3

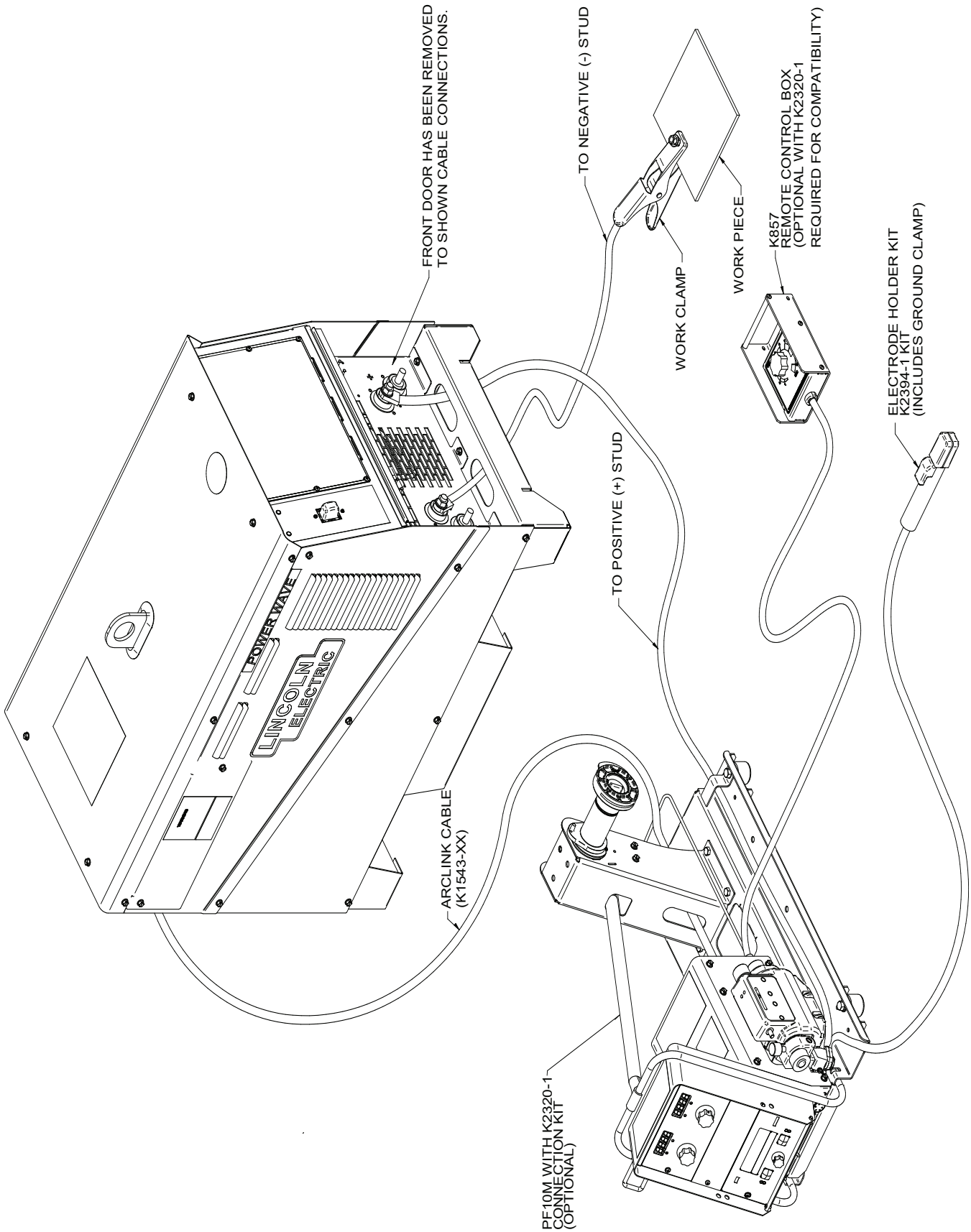

TIG PROCESS

FIGURE A.4

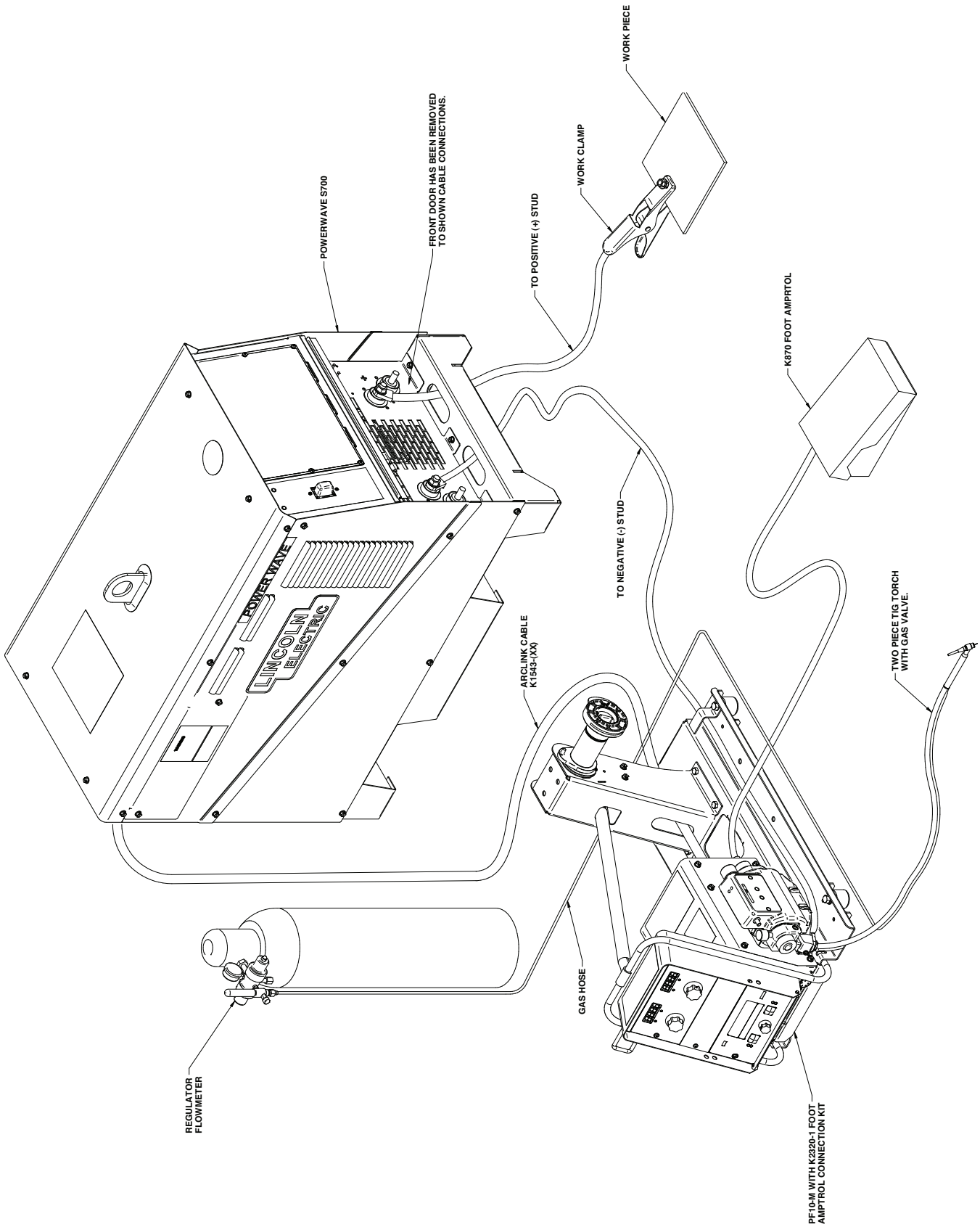

MIG AND WATER COOLER PROCESS

FIGURE A.5

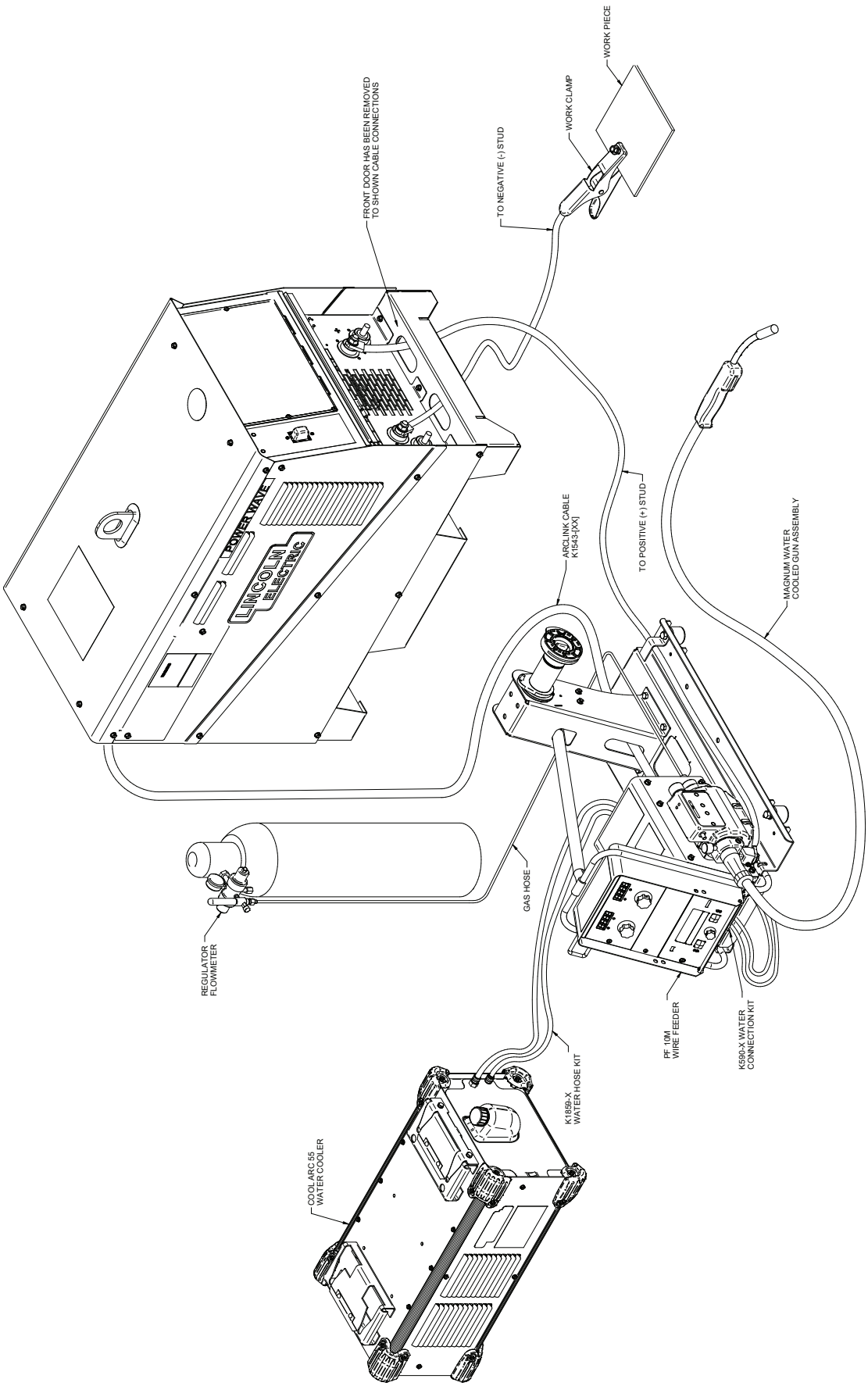

SYNCHRONIZED TANDEM CONNECTION

FIGURE A.6

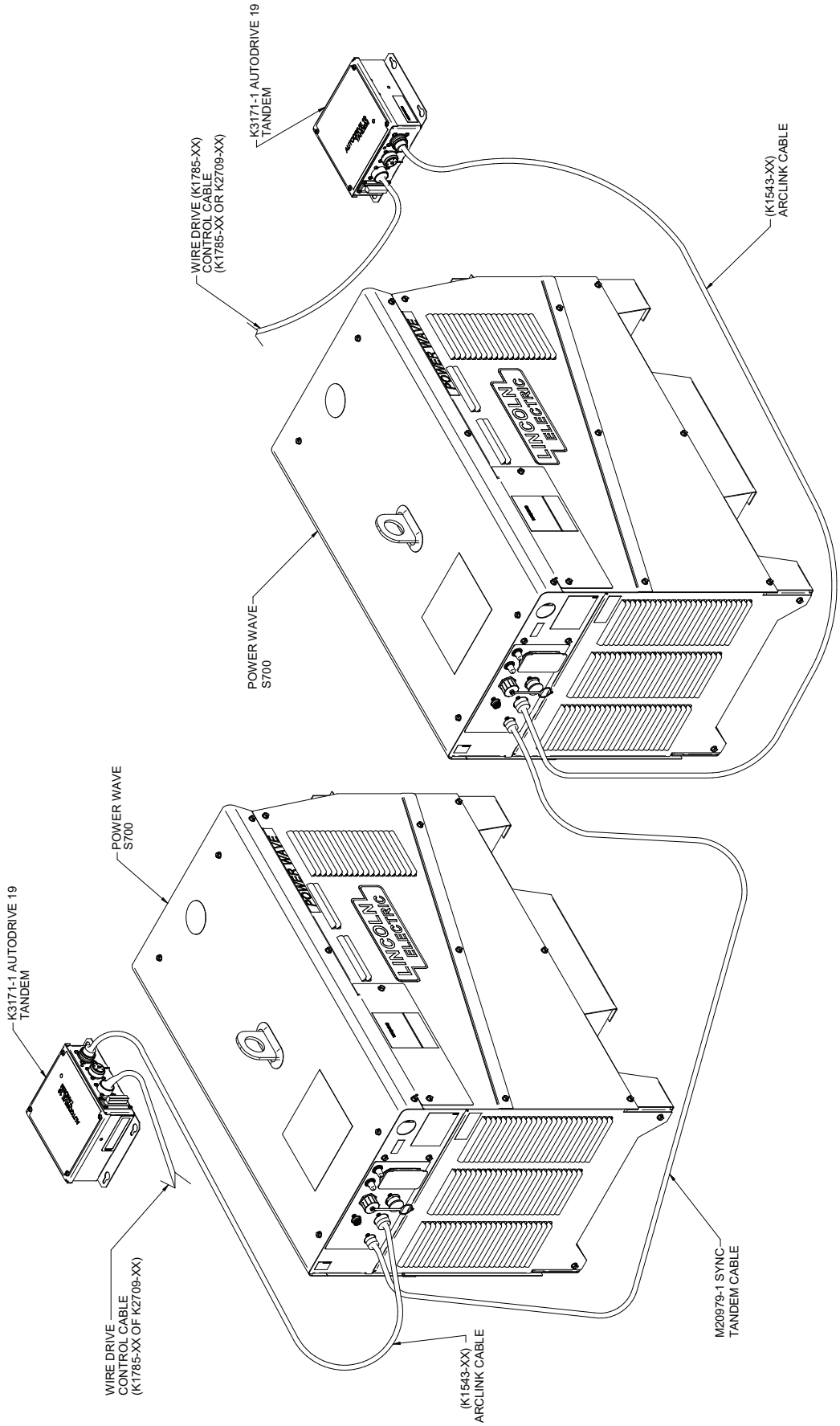

ROBOTIC SINGLE ARM PROCESS SETUP

FIGURE A.7

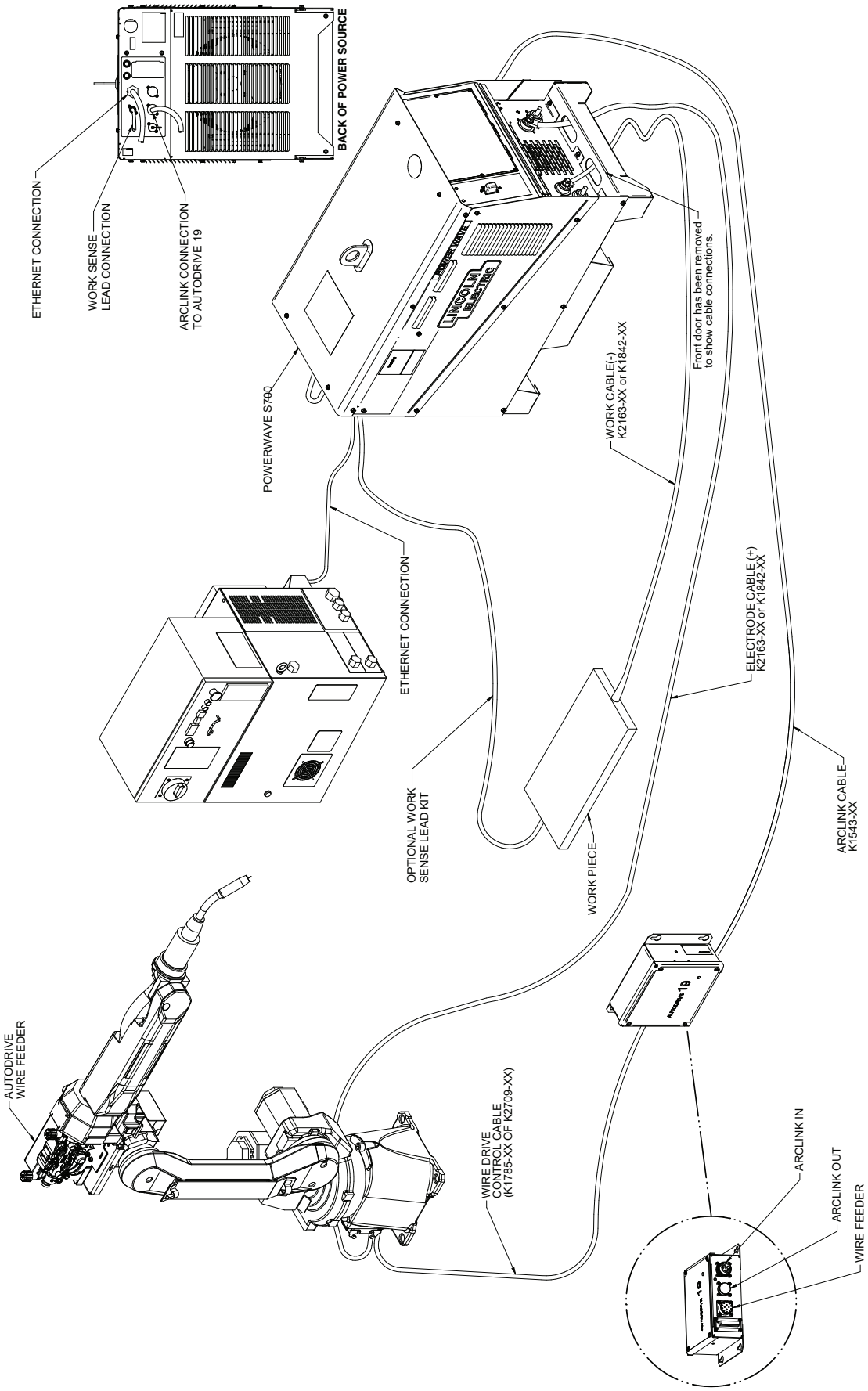

ANALOG INTERFACE SETUP

FIGURE A.8

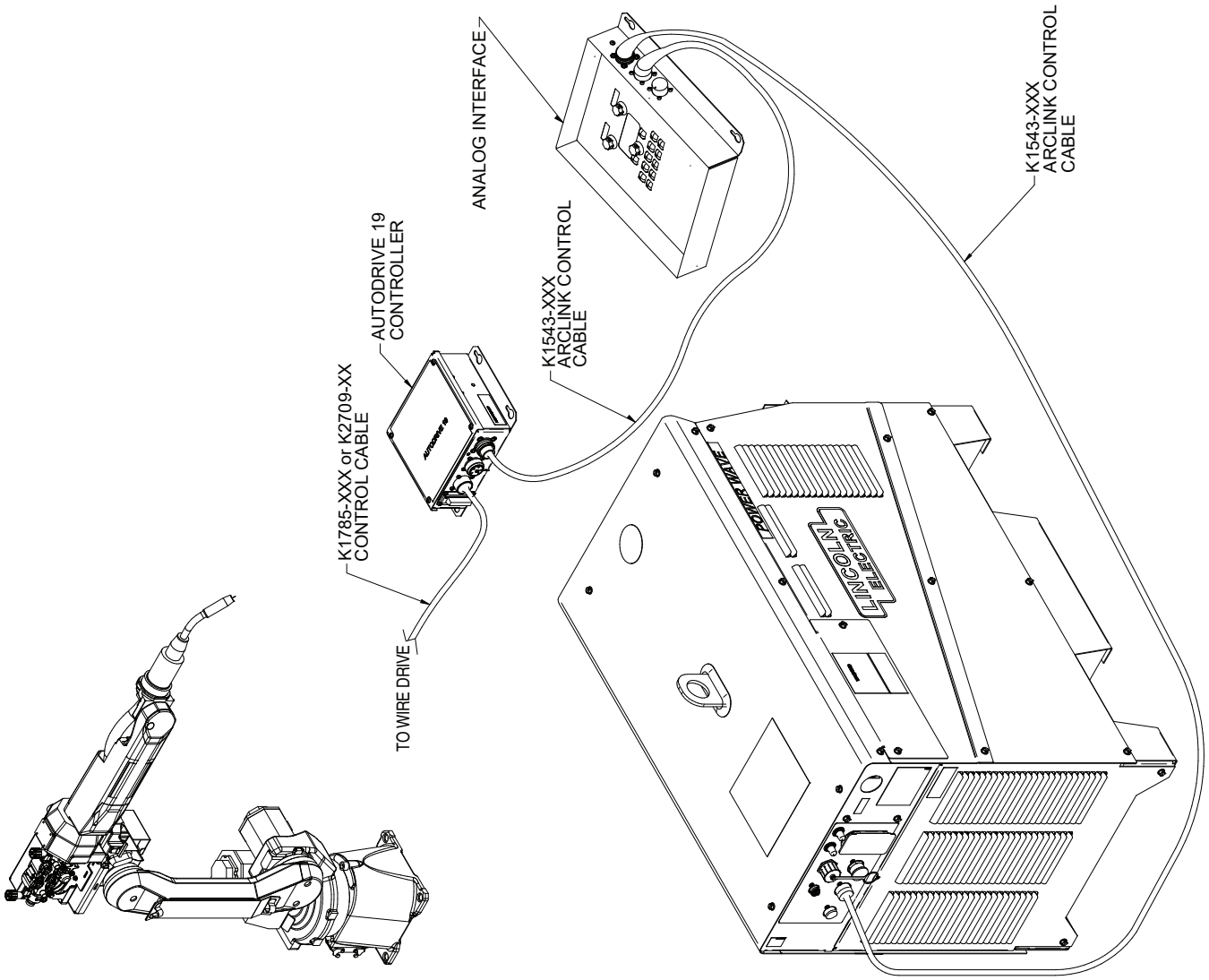

CONTROL BOARD SETUP FOR SYNCHRONIZED TANDEM

FIGURE A.9

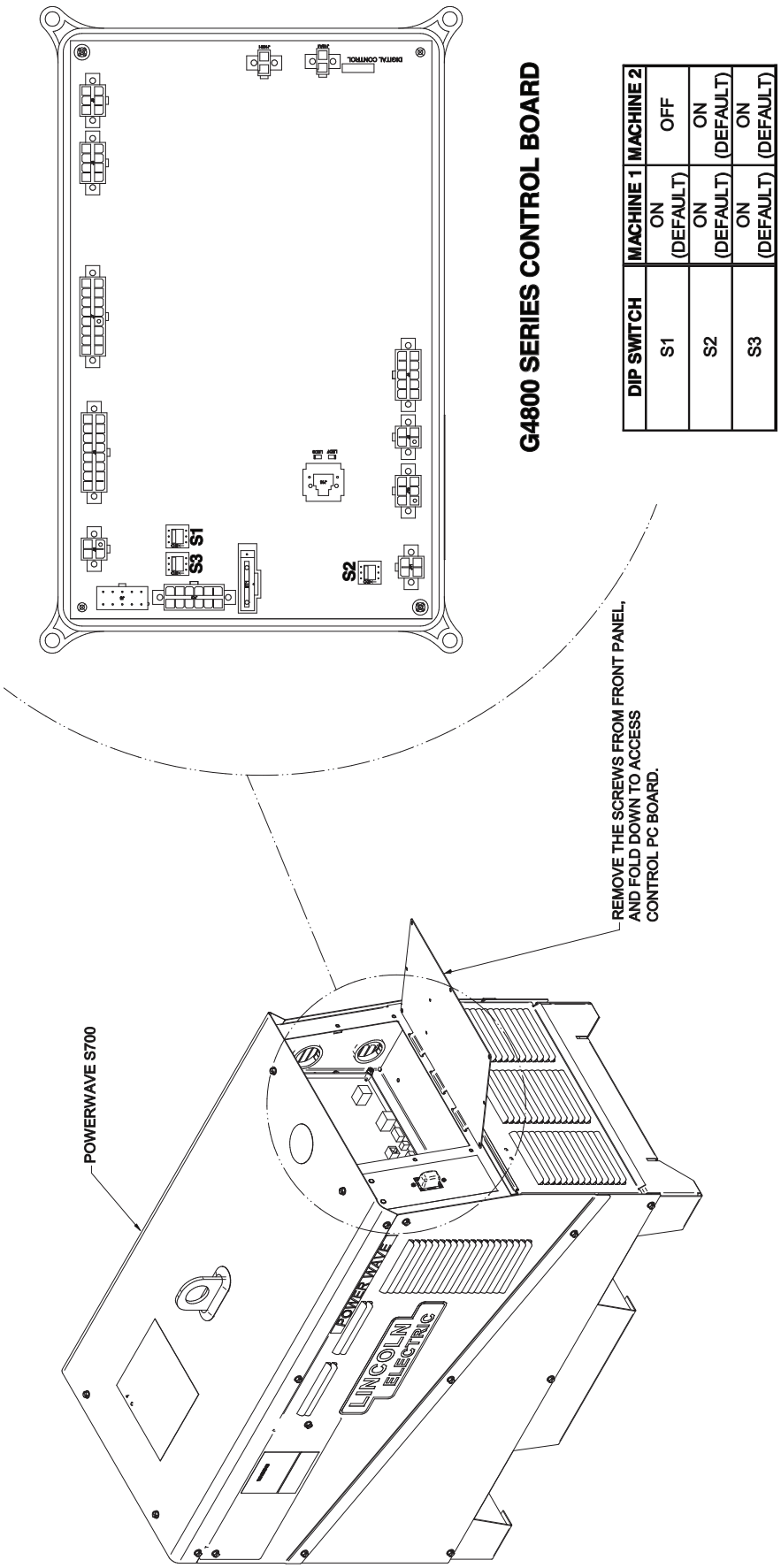

DIP SWITCH	MACHINE 1	MACHINE 2
S1	ON (DEFAULT)	OFF
S2	ON (DEFAULT)	ON (DEFAULT)
S3	ON (DEFAULT)	ON (DEFAULT)

RECOMMENDED WORK CABLE SIZES FOR ARC WELDING

Connect the electrode and work cables between the appropriate output studs of the POWER WAVE® S700 per the following guidelines:

- Most welding applications run with the electrode being positive (+). For those applications, connect the electrode cable between the wire drive feed plate and the positive (+) output stud on the power source. Connect a work lead from the negative (-) power source output stud to the work piece
- When negative electrode polarity is required, such as in some Innershield® applications, reverse the output connections at the power source (electrode cable to the negative (-) stud, and work cable to the positive (+) stud).

⚠ CAUTION

Negative electrode polarity operation WITHOUT use of a remote work sense lead (21) requires the Negative Electrode Polarity attribute to be set. See the Remote Sense Lead Specification section of this document for further details.

For additional Safety information regarding the electrode and work cable set-up, See the standard "**SAFETY INFORMATION**" located in the front of this Instruction Manual.

The following recommendations apply to all output polarities and weld modes:

- **Select the appropriate size cables per the "Output Cable Guidelines" below.** Excessive voltage drops caused by undersized welding cables and poor connections often result in unsatisfactory welding performance. Always use the largest welding cables (electrode and work) that are practical, and be sure all connections are clean and tight.

Note: Excessive heat in the weld circuit indicates undersized cables and/or bad connections.

- **Route all cables directly to the work and wire feeder, avoid excessive lengths and do not coil excess cable.** Route the electrode and work cables in close proximity to one another to minimize the loop area and therefore the inductance of the weld circuit.

- **Always weld in a direction away from the work (ground) connection.**

Table A.1 shows copper cable sizes recommended for different currents and duty cycles. Lengths stipulated are the distance from the welder to work and back to the welder again. Cable sizes are increased for greater lengths primarily for the purpose of minimizing cable drop.

OUTPUT CABLE GUIDELINES (Table A.1)						
Amperes	Percent Duty Cycle	CABLE SIZES FOR COMBINED LENGTHS OF ELECTRODE AND WORK CABLES [RUBBER COVERED COPPER - RATED 167°F (75°C)]**				
		0 to 50 Ft.	50 to 100 Ft.	100 to 150 Ft.	150 to 200 Ft.	200 to 250 Ft.
200	60	2	2	2	1	1/0
200	100	2	2	2	1	1/0
250	30	3	3	2	1	1/0
250	40	2	2	1	1	1/0
250	60	1	1	1	1	1/0
250	100	1	1	1	1	1/0
300	60	1	1	1	1/0	2/0
300	100	2/0	2/0	2/0	2/0	3/0
350	40	1/0	1/0	2/0	2/0	3/0
400	60	2/0	2/0	2/0	3/0	4/0
400	100	3/0	3/0	3/0	3/0	4/0
500	60	2/0	2/0	3/0	3/0	4/0
600	60	3/0	3/0	3/0	4/0	2-3/0
600	80	2-1/0	2-1/0	2-1/0	2-2/0	2-3/0
600	100	2-1/0	2-1/0	2-1/0	2-2/0	2-3/0
650	60	3/0	3/0	4/0	2-2/0	2-3/0
650	80	2-1/0	2-1/0	2-1/0	2-2/0	2-3/0
700	100	2-2/0	2-2/0	2-3/0	2-3/0	2-4/0
800	80	3-1/0	3-1/0	3-1/0	2-3/0	2-4/0
800	100	2-3/0	2-3/0	2-3/0	2-3/0	2-4/0
900	80	2-4/0	2-4/0	2-4/0	2-4/0	4-2/0
900	100	3-3/0	3-3/0	3-3/0	3-3/0	3-3/0

** Tabled values are for operation at ambient temperatures of 104°F (40°C) and below. Applications above 104°F (40°C) may require cables larger than recommended, or cables rated higher than 167°F (75°C).

CABLE INDUCTANCE AND ITS EFFECTS ON WELDING

Excessive cable inductance will cause the welding performance to degrade. There are several factors that contribute to the overall inductance of the cabling system including cable size, and loop area. The loop area is defined by the separation distance between the electrode and work cables, and the overall welding loop length. The welding loop length is defined as the total of length of the electrode cable (A) + work cable (B) + work path (C) (See Figure A.10).

To minimize inductance always use the appropriate size cables, and whenever possible, run the electrode and work cables in close proximity to one another to minimize the loop area. Since the most significant factor in cable inductance is the welding loop length, avoid excessive lengths and do not coil excess cable. For long work piece lengths, a sliding ground should be considered to keep the total welding loop length as short as possible.

REMOTE SENSE LEAD SPECIFICATIONS

Voltage Sensing Overview

The best arc performance occurs when the Power Wave® S700 has accurate data about the arc conditions.

Depending upon the process, inductance within the electrode and work cables can influence the voltage apparent at the studs of the welder, and have a dramatic effect on performance. To counteract this negative effect, remote voltage sense leads are used to improve the accuracy of the arc voltage information supplied to the control pc board. Sense lead kits (K1811-XX) are available for this purpose.

There are several different sense lead configurations that can be used depending on the application. In extremely sensitive applications it may be necessary to route cables that contain the sense leads away from the electrode and work welding cables.

⚠ CAUTION

If the auto sense lead feature is disabled and remote voltage sensing is enabled but the sense leads are missing or improperly connected extremely high welding outputs may occur.

Electrode Voltage Sensing

The remote ELECTRODE sense lead (67) is built into the wire feeder control cable and accessible at the wire drive. It should always be connected to the wire drive feed plate when a wire feeder is present. Enabling or disabling electrode voltage sensing is application specific, and automatically configured through software.

FIGURE A.10

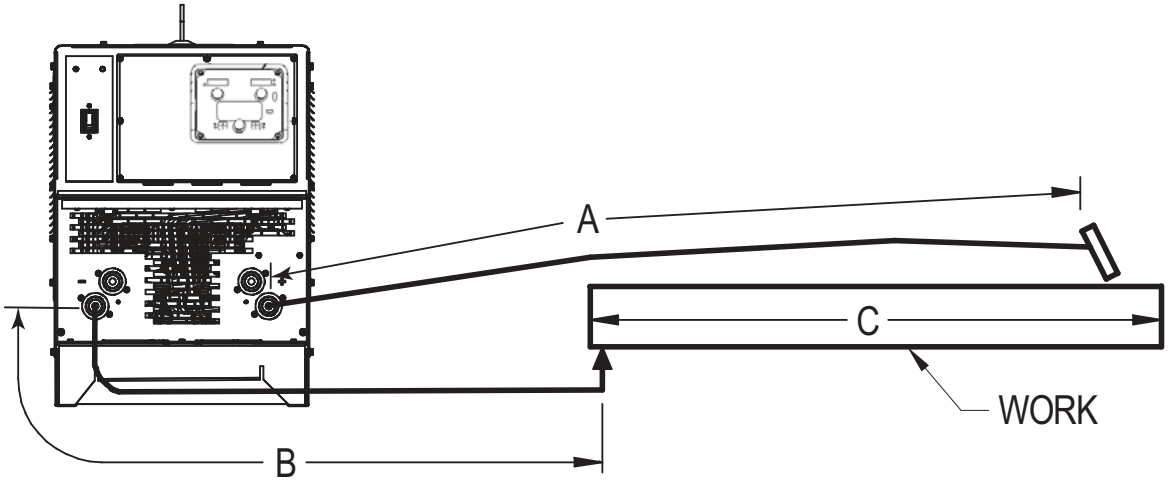

General Guidelines for Voltage Sense Leads

Sense leads should be attached as close to the weld as practical, and out of the weld current path when possible. In extremely sensitive applications it may be necessary to route cables that contain the sense leads away from the electrode and work welding cables.
Voltage sense leads requirements are based on the weld process (See Table A.2)

VOLTAGE SENSING CONSIDERATIONS FOR MULTIPLE ARC SYSTEMS

Special care must be taken when more than one arc is welding simultaneously on a single part. Multiple arc applications do not necessarily dictate the use of remote work voltage sense leads, but they are strongly recommended.

If Sense Leads ARE NOT Used:

- Avoid common current paths. Current from adjacent arcs can induce voltage into each others current paths that can be misinterpreted by the power sources, and result in arc interference.

If Sense Leads ARE Used:

- Position the sense leads out of the path of the weld current. Especially any current paths common to adjacent arcs. Current from adjacent arcs can induce voltage into each others current paths that can be misinterpreted by the power sources, and result in arc interference.

- For longitudinal applications, connect all work leads at one end of the weldment, and all of the work voltage sense leads at the opposite end of the weldment. Perform welding in the direction away from the work leads and toward the sense leads.

(See Figure A.11)

TABLE A.2

Process	Electrode Voltage Sensing (1) 67 lead	Work Voltage Sensing (2) 21 lead
GMAW	67 lead required	21 lead optional (3)
GMAW-P	67 lead required	21 lead optional (3)
FCAW	67 lead required	21 lead optional (3)
GTAW	Voltage sense at studs	Voltage sense at studs
SMAW	Voltage sense at studs	Voltage sense at studs

(1) The electrode voltage sense lead (67) is automatically enabled by the weld process, and integral to the 5 pin arclink control cable (K1543-xx).
(2) When a work voltage sense lead (21) is connected the power source will automatically switch over to using this feedback (if the auto sense feature is enabled).
(3) Negative polarity semi-automatic process operation WITHOUT use of a remote work sense lead (21) requires the Negative Electrode Polarity attribute to be set.

FIGURE A.11

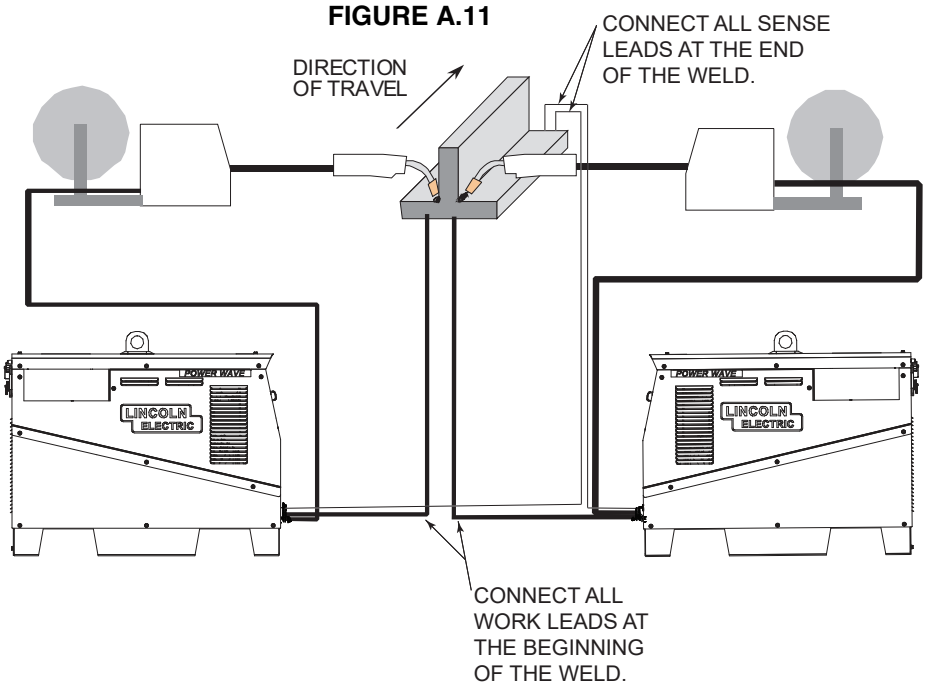

- **For circumferential applications**, connect all work leads on one side of the weld joint, and all of the work voltage sense leads on the opposite side, such that they are out of the current path.

(See Figure A.12)

FIGURE A.12

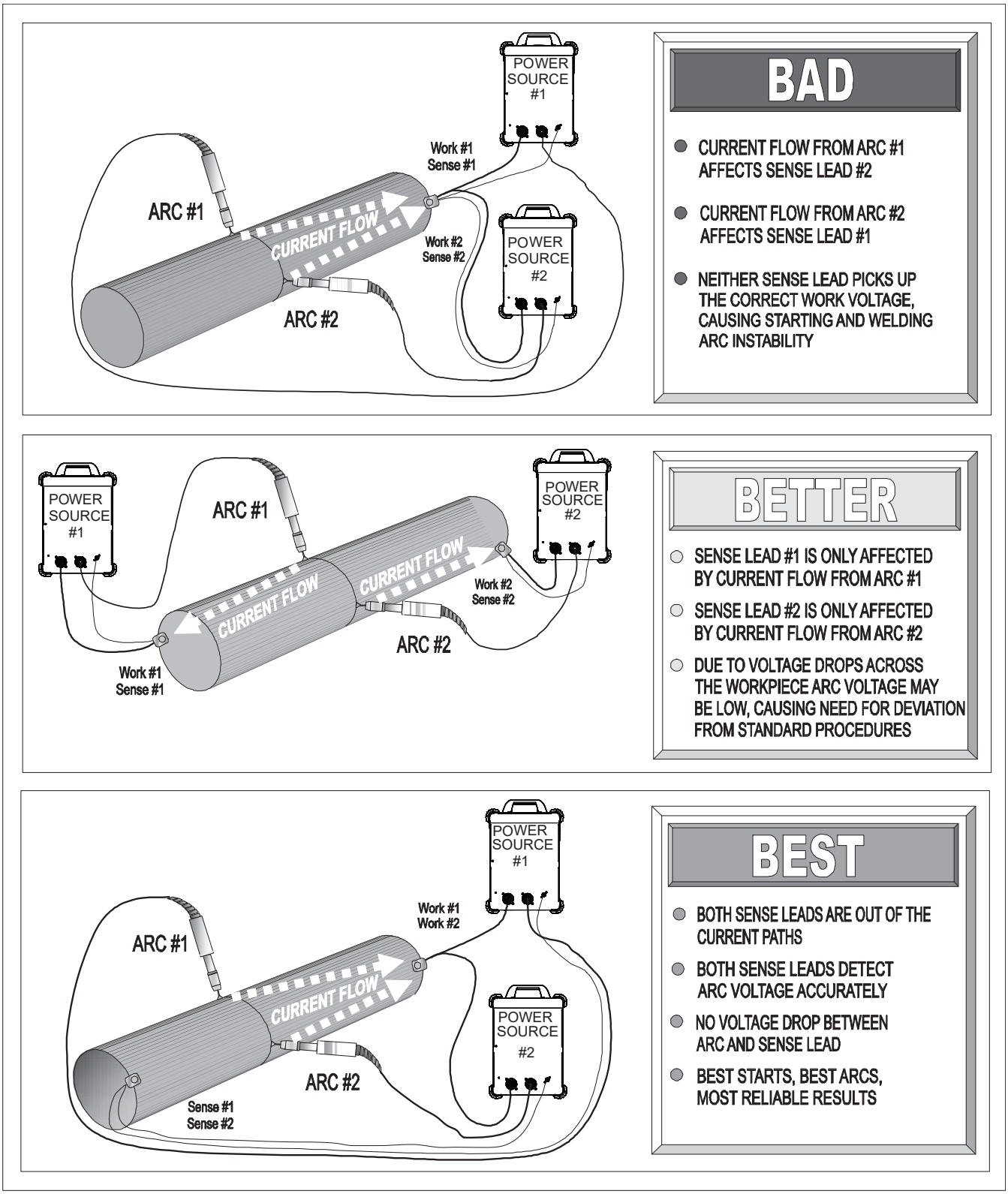

CONTROL CABLE CONNECTIONS

GENERAL GUIDELINES

Genuine Lincoln control cables should be used at all times (except where noted otherwise). Lincoln cables are specifically designed for the communication and power needs of the Power Wave® / Power Feed™ systems. Most are designed to be connected end to end for ease of extension. Generally, it is recommended that the total length not exceed 100ft. (30.5m). The use of non-standard cables, especially in lengths greater than 25 feet, can lead to communication problems (system shutdowns), poor motor acceleration (poor arc starting), and low wire driving force (wire feeding problems). Always use the shortest length of control cable possible, and **DO NOT coil excess cable**.

Regarding cable placement, best results will be obtained when control cables are routed separate from the weld cables. This minimizes the possibility of interference between the high currents flowing through the weld cables, and the low level signals in the control cables. These recommendations apply to all communication cables including ArcLink® and Ethernet connections.

COMMON EQUIPMENT CONNECTIONS

Connection Between Power Source and ArcLink® Compatible Wirefeeders

The K1543-xx 5-pin ArcLink® control cable or the heavy duty K2683-xx ArcLink® cable connects the power source to the wire feeder. The control cable consists of two power leads, one twisted pair for digital communication, and one lead for voltage sensing. The 5-pin ArcLink® connection on the Power Wave® S700 is located on rear panel.

The control cable is keyed and polarized to prevent improper connection. Best results will be obtained when control cables are routed separate from the weld cables, especially in long distance applications. The recommended combined length of the ArcLink® control cable network should not exceed 200ft.

Connection Between the Power Source and Optional DeviceNet Programmable Logic Controller (PLC)

It is sometimes more practical and cost effective to use a custom PLC interface to control a system. The Power Wave® S700 is equipped with a 5-pin DeviceNet mini-style receptacle for this purpose. The receptacle is located on the rear panel of the machine. The DeviceNet cable is keyed and polarized to prevent improper connection.

Note: DeviceNet cables should not be routed with weld cables, wire drive control cables, or any other current carrying device that can create a fluctuating magnetic field.

DeviceNet cables must be sourced locally by the customer. For additional guidelines refer to the "DeviceNet Cable Planning and Installation Manual" (Allen Bradley publication DN-6.7.2).

Connection Between Power Source and Ethernet Networks

The Power Wave® S700 is equipped with a RJ-45 Ethernet connector, which is located on the rear panel. All external Ethernet equipment (cables, switches, etc.), as defined by the connection diagrams, must be supplied by the customer. It is critical that all Ethernet cables external to either a conduit or an enclosure are solid conductor, shielded cat 5e cable, with a drain. The drain should be grounded at the source of transmission. For best results, route Ethernet cables away from weld cables, wire drive control cables, or any other current carrying device that can create a fluctuating magnetic field. For additional guidelines refer to ISO/IEC 11801. Failure to follow these recommendations can result in an Ethernet connection failure during welding.

Connections Between Power Sources in Multi-Arc Applications

The Power Wave® S700 is equipped with an I/O connector such that two power sources can be used for a Synchronized Tandem application. An Autodrive 19 Tandem controller is required for tandem welding.

SAFETY PRECAUTIONS

READ AND UNDERSTAND ENTIRE SECTION BEFORE OPERATING MACHINE.

⚠ WARNING

- **ELECTRIC SHOCK CAN KILL.**
- **Do not touch electrically live part or electrode with skin or wet clothing.**
- **Insulate yourself from work and ground.**
- **Always wear dry insulating gloves.**
- **Do not operate with covers, panels or guards removed or open.**

- **FUMES AND GASSES can be dangerous.**
- **Keep your head out of fumes.**
- **Use ventilation or exhaust to remove fumes from breathing zone.**

- **WELDING SPARKS can cause fire or explosion.**
- **Keep flammable material away.**

ARC RAYS can burn.

- **Wear eye, ear and body protection.**

SEE ADDITIONAL WARNING INFORMATION UNDER ARC WELDING SAFETY PRECAUTIONS AND IN THE FRONT OF THIS OPERATING MANUAL.

POWER-UP SEQUENCE

When power is applied to the Power Wave® S700, the status lights will flash green, for up to 60 seconds. This is normal and indicates Power Wave® S700 is performing a self test, and mapping (identifying) each component in the local ArcLink system. The status lights will also flash green as a result of a system reset or configuration change during operation. When the status lights become steady green the system is ready for normal operation.

If the status lights do not become steady green consult the troubleshooting section of this manual for further instruction.

DUTY CYCLE

The duty cycle is based on a ten-minute period. A 40% duty cycle represents 4 minutes of welding and 6 minutes of idling in a ten-minute period. Refer to the technical specification section for the POWER WAVE® S700's duty cycle ratings.

GRAPHIC SYMBOLS THAT APPEAR ON THIS MACHINE OR IN THIS MANUAL

ETHERNET CONNECTOR

ARC LINK CONNECTOR

DEVICENET CONNECTOR

115VAC RECEPTACLE

SYNC TANDEM CONNECTOR

WORK SENSE LEAD CONNECTOR

GRAPHIC SYMBOLS THAT APPEAR ON THIS MACHINE OR IN THIS MANUAL

	INPUT POWER		
	ON	U_0	OPEN CIRCUIT VOLTAGE
	OFF	U_1	INPUT VOLTAGE
	HIGH TEMPERATURE	U_2	OUTPUT VOLTAGE
	MACHINE STATUS	I_1	INPUT CURRENT
	CIRCUIT BREAKER	I_2	OUTPUT CURRENT
	WIRE FEEDER		PROTECTIVE GROUND
	POSITIVE OUTPUT		
	NEGATIVE OUTPUT		WARNING or CAUTION
	3 PHASE INVERTER		Explosion
	INPUT POWER		Dangerous Voltage
	THREE PHASE		Shock Hazard
	DIRECT CURRENT		

PRODUCT DESCRIPTION

PRODUCT SUMMARY

The Power Wave® S700 is an advanced-process DC inverter and is rated for 700 amps, 44 volts at a 100% duty cycle or 900 amps, 44 volts at a 60% duty cycle. It operates on 380V-415V, 440V-460V, 500V, or 575V 50 Hz or 60 Hz, 3 phase power, so that it can be used worldwide. However, a CE filter upgrade is required for CE compliance. Switching between input voltages is made simple by use of a single reconnect panel. The power source is designed with a rugged case that carries an IP23 environmental rating for both indoor and outdoor use. Transporting and lifting the Power Wave® S700 are made simple though a lift bale and integrated fork-lift tracks in the machine base. A duplex 10A, 115V receptacle is located on the case back for auxiliary power.

The Power Wave® S700 is designed to be compatible with the current range of ArcLink compatible wire feeders and accessories, such as the Power Feed series wire feeders via connectivity through a 5-pin circular connector on the case back. Other Lincoln wire feeders and non-Lincoln wire feeders cannot be used. The machine comes equipped with an Ethernet connector useful for software upgrades, and access to Power Wave® software tools like Checkpoint and Production Monitoring. It also comes standard with a DeviceNet CAN connector for PLC interfacing.

Each machine is factory preprogrammed with multiple welding procedures, typically including GMAW, GMAW-P, FCAW, SMAW, CAC, and GTAW for a variety of materials, including mild steel, stainless steel, cored wires, and aluminum. All welding programs and procedures are configured through software for the Power Waves® available at (http://powerwavesoftware.com/). With the proper configuration, Fanuc robots equipped with RJ-3 or RJ-3iB controllers may communicate directly to the Power Wave® via ArcLink or DeviceNet. For tandem robotic welding, 6-pin sync connector comes standard on the Power Wave® S700. When connected with the proper accessories, this will allow for unlocking of additional tandem weld modes.

Proper configuration and options allow other equipment such as PLC's or computers to interface with a Power Wave® through a DeviceNet, ArcLink, or Ethernet interfaces. In some cases, interface kits may be required for analog control.

RECOMMENDED PROCESSES AND EQUIPMENT

The Power Wave® S700 is recommended for semi-automatic welding, robotic welding, and can be used for tandem welding with additional accessories. The Power Wave® S700 can be set up in a number of configurations, some requiring optional equipment or welding programs.

RECOMMENDED EQUIPMENT

The Power Wave® S700 is designed to be compatible with the current range of Power Feed® wire feeders for semi-automatic welding. The Power Wave® S700 is also designed for robotic applications and can communicate with Fanuc RJ-3 or RJ-3iB controllers via ArcLink®.

RECOMMENDED PROCESSES

The Power Wave® S700 is a multi-process inverter power source capable of regulating current, voltage, and power of the welding arc. The Power Wave® S700 has an output range of 20 to 900 amps, and supports a number of standard processes including synergic GMAW, GMAW-P, FCAW-G, FCAW-S, CAG, SMAW, and GTAW on various materials especially steel, aluminum and stainless.

PROCESS LIMITATIONS

The Power Wave® S700 is suitable only for the processes listed.

Do not use the Power Wave® S700 for pipe thawing applications.

EQUIPMENT LIMITATIONS

Operating temperature range is -20° C to + 40° C (-4°F to 104ºF).

Only ArcLink compatible wire feeders and accessories may be used with the Power Wave® S700. Other Lincoln wire feeders and non-Lincoln wire feeders are not compatible with this power source.

The Power Wave® S700 will support a maximum average output of 700A/44V at 100% duty cycle or 900A/44V at a 60% duty cycle.

Basic Package	
K3279-1, K3279-2 K3557-1	Power Wave® S700
K2230-1	Power Feed® 10M Wire Feeder
K1543-xx	Control Cable (5 pin – 5 pin) - power source to wire feeder
K1811-xx	Sense Lead (work)

Sync Tandem Package (2 of each Required)	
K3279-1, K3279-2 K3557-1	Power Wave® S700
K2685-1	Autodrive 4R220 Wire Drive
K3171-1	AutoDrive 19 Tandem
K1543-xx	Control Cable (5 pin – 5 pin) - power source to Autodrive 19 Tandem
K1785-xx	Control Cable (14 pin – 14 pin) – Autodrive 19 Tandem to wire drive
K1811-xx	Sense Lead (work)

Common Optional Kits	
K2444-4	CE, C-Tick Filter Kit (not an opton for K3557-1)
K2683-xx	Heavy Duty ArcLink Control Cable

DESIGN FEATURES

- Severe Duty Design for outdoor use (IP23 rating).
- iARC™ Digital Control – 90 times faster than the previous generation, delivering a responsive arc.
- Fork lift access base design for ease of installation or movement.
- Output range: 20 – 900 Amps.
- Coaxial Transformer Technology – gives reliable high-speed operation.
- Passive Power Factor Correction – reliably gives 95% power factor for lower installation costs.
- 88% Efficiency rating – reduces electrical utility costs.
- Seamless integration with Ethernet, DeviceNet and ArcLink.
- Circuit breaker protected 10-amp, 115V auxiliary power.
- F.A.N. (fan as needed). Cooling fan runs when the output is energized, and for 5 minutes after arc is extinguished.
- Thermal protection by thermostats with Thermal Indicator LED.
- Built-in Line Voltage Compensation holds the output constant over ±10% input voltage fluctuations.
- Electronic over current protection.
- Input over voltage protection.
- Utilizes digital signal processing and microprocessor control.
- Simple, reliable input voltage changeover.
- Conforms to the IEC 60974-1 and GB15579-1995 Standards.
- Ethernet connectivity via RJ-45 connector.
- Potted PC boards for enhanced ruggedness/reliability.
- ArcLink®, Ethernet, and DeviceNet™ Communication – Offers remote process monitoring, control and troubleshooting.
- True Energy™ - Measures, calculates and displays instantaneous energy in the weld for critical heat input calculations.
- Production Monitoring™ 2.2 – Track equipment usage, store weld data, and configure limits to assist in welding efficiency analysis.

CASE FRONT CONTROLS

(See Figure B.1)

1. POWER SWITCH: Controls input power to the Power Wave® S700.

2. STATUS LED - A two color light that indicates the condition of the system. Normal operation is a steady green light. Error conditions are detailed in the Trouble Shooting Section of this manual. A red light indicates an error.

NOTE: The Power Wave® S700's status light will flash green for up to 60 seconds when the machine is first turned on. This is a normal situation as the machine goes through a self test at power up.

3. THERMAL LED - A yellow light that comes on when an over temperature condition occurs. Output is disabled until the machine cools down. When cool, the light goes out and output is enabled.

4. ACCESS PANEL - This panel provides access to the Control Board compartment.

5. POSITIVE OUTPUT STUDS

6. NEGATIVE OUTPUT STUDS

FIGURE B.1

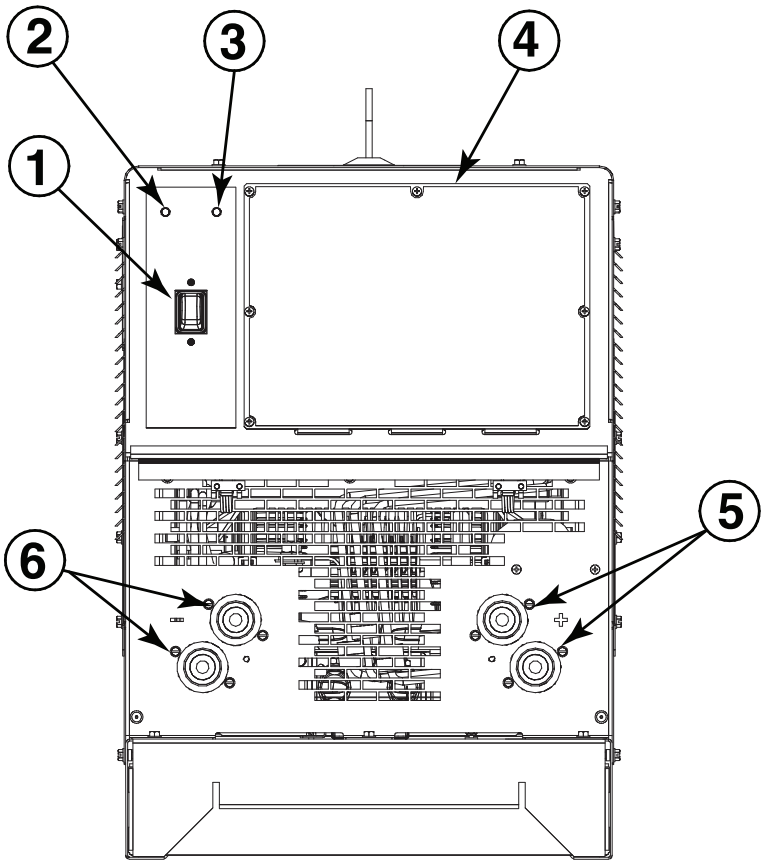

CASE BACK CONTROLS

(See Figure B.2)

1. 115V/10A AUXILIARY OUTPUT RECEPTACLE.

2. 10 AMP CIRCUIT BREAKER (CB1) - Protects the 40VDC wire feeder power supply.

3. 10 AMP CIRCUIT BREAKER (CB2) - Protects the 115VAC auxiliary power receptacle.

4. ETHERNET CONNECTOR (RJ-45) - Provides Ethernet communication to remote equipment.

5. WORK SENSE LEAD CONNECTOR (4 PIN) - Connection point for the 21 lead.

6. SYNC TANDEM CONNECTOR - Used to interconnect machines for tandem robotic welding processes.

7. ARCLINK (5 PIN) - Provides power and communication to the controller.

8. DEVICENET CONNECTOR - Provides DeviceNet communication to remote equipment.

FIGURE B.2

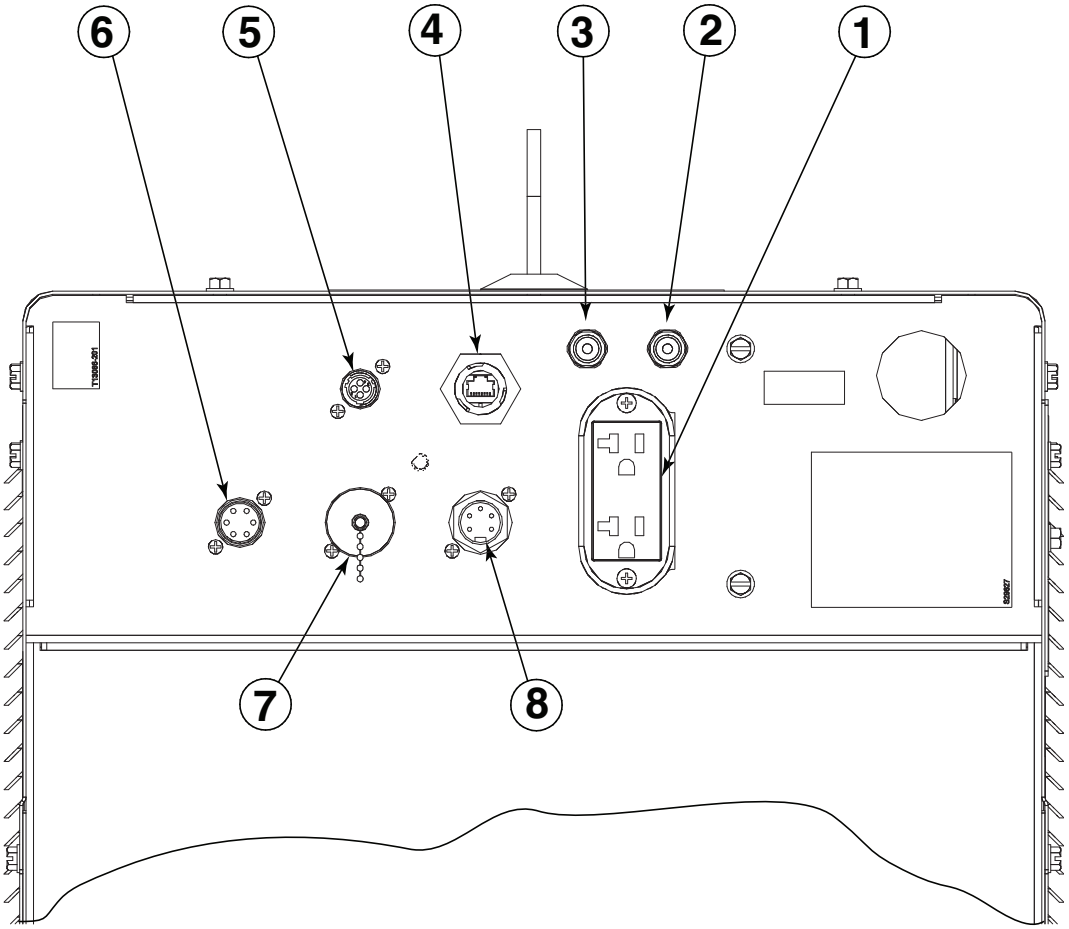

COMMON WELDING PROCEDURES

⚠ WARNING

MAKING A WELD

The serviceability of a product or structure utilizing the welding programs is and must be the sole responsibility of the builder/user. Many variables beyond the control of The Lincoln Electric Company affect the results obtained in applying these programs. These variables include, but are not limited to, welding procedure, plate chemistry and temperature, weldment design, fabrication methods and service requirements. The available range of a welding program may not be suitable for all applications, and the build/user is and must be solely responsible for welding program selection.

The steps for operating the Power Wave® will vary depending upon the user interface of the welding system. The flexibility of the Power Wave® lets the user customize operation for the best performance.

Find the program in the welding software that best matches the desired welding process. The standard software shipped with the Power Waves encompasses a wide range of common processes and will meet most needs. If a special welding program is desired, contact the local Lincoln Electric sales representative.

To make a weld, the Power Wave® S700 needs to know the desired welding parameters. Waveform Control Technology ™ allows full customization of Strike, Run-in, Crater and other parameters for exacting performance.

DEFINITION OF WELDING MODES

NON-SYNERGIC WELDING MODES

- A **Non-synergic** welding mode requires all welding process variables to be set by the operator.

SYNERGIC WELDING MODES

- A **Synergic** welding mode offers the simplicity of single knob control. The machine will select the correct voltage and amperage based on the Wire Feed Speed (WFS) set by the operator.

BASIC WELDING CONTROLS

Weld Mode

Selecting a weld mode determines the output characteristics of the Power Wave® power source. Weld modes are developed with a specific electrode material, electrode size, and shielding gas. For a more complete description of the weld modes programmed into the POWER WAVE® S700 at the factory, refer to the Weld Set Reference Guide supplied with the machine or available at **www.powerwavesoftware.com.**

Wire Feed Speed (WFS)

In synergic welding modes (synergic CV, GMAW-P), WFS is the dominant control parameter. The user adjusts WFS according to factors such as wire size, penetration requirements, heat input, etc. The POWER WAVE® S700 then uses the WFS setting to adjust the voltage and current according to settings contained in the POWER WAVE®.

In non-synergic modes, the WFS control behaves like a conventional power source where WFS and voltage are independent adjustments. Therefore, to maintain proper arc characteristics, the operator must adjust the voltage to compensate for any changes made to the WFS.

Amps

In constant current modes, this control adjusts the welding amperage.

Volts

In constant voltage modes, this control adjusts the welding voltage.

Trim

In pulse synergic welding modes, the Trim setting adjusts the arc length. Trim is adjustable from 0.50 to 1.50. 1.00 is the nominal setting and is a good starting point for most conditions.

UltimArc™ Control

UltimArc™ Control allows the operator to vary the arc characteristics. UltimArc™ Control is adjustable from –10.0 to +10.0 with a nominal setting of 0.0.

SMAW (STICK) WELDING

The welding current and Arc Force settings can be set through a Power Feed™ 10M or Power Feed™ 25M wire feeder. Alternatively an optional Stick / TIG UI can be installed into the power source to control these settings locally.

In a **SMAW** (STICK mode), Arc Force can be adjusted. It can be set to the lower range for a soft and less penetrating arc characteristic (negative numeric values) or to the higher range (positive numeric values) for a crisp and more penetrating arc. Normally, when welding with cellulosic types of electrodes (E6010, E7010, E6011), a higher energy arc is required to maintain arc stability. This is usually indicated when the electrode sticks to the work-piece or when the arc becomes unstable during manipulative technique. For low hydrogen types of electrodes (E7018, E8018, E9018, etc.) a softer arc is usually desirable and the lower end of the Arc Control suits these types of electrodes. In either case the arc control is available to increase or decrease the energy level delivered to the arc.

GTAW (TIG) WELDING

The welding current can be set through a Power Feed®10M or Power Feed® 25M wire feeder. Alternatively an optional User Interface Kit (K3362-1) can be installed into the power source to control these settings locally.

The Power Wave® S700 can be run in either a Touch Start TIG mode or Scratch start TIG mode

CONSTANT VOLTAGE WELDING

Synergic CV

For each wire feed speed, a corresponding voltage is preprogrammed into the machine through special software at the factory. The nominal preprogrammed voltage is the best average voltage for a given wire feed speed, but may be adjusted to preference. When the wire feed speed changes, the Power Wave® automatically adjusts the voltage level correspondingly to maintain similar arc characteristics throughout the WFS range.

Non Synergic CV

In non-synergic modes, the WFS control behaves more like a conventional CV power source where WFS and voltage are independent adjustments. Therefore to maintain the arc characteristics, the operator must adjust the voltage to compensate for any changes made to the WFS.

All CV Modes

Pinch adjusts the apparent inductance of the wave shape. The “pinch” function is inversely proportional to inductance. Therefore, increasing Pinch Control greater than 0.0 results in a crisper arc (more spatter) while decreasing the Pinch Control to less than 0.0 provides a softer arc (less spatter).

PULSE WELDING

Pulse welding procedures are set by controlling an overall “arc length” variable. When pulse welding, the arc voltage is highly dependent upon the waveform. The peak current, back ground current, rise time, fall time and pulse frequency all affect the voltage. The exact voltage for a given wire feed speed can only be predicted when all the pulsing waveform parameters are known. Using a preset voltage becomes impractical and instead the arc length is set by adjusting “trim”.

Trim adjusts the arc length and ranges from 0.50 to 1.50 with a nominal value of 1.00. Trim values greater than 1.00 increase the arc length, while values less than 1.00 decrease the arc length. (See figure B.3)

FIGURE B.3

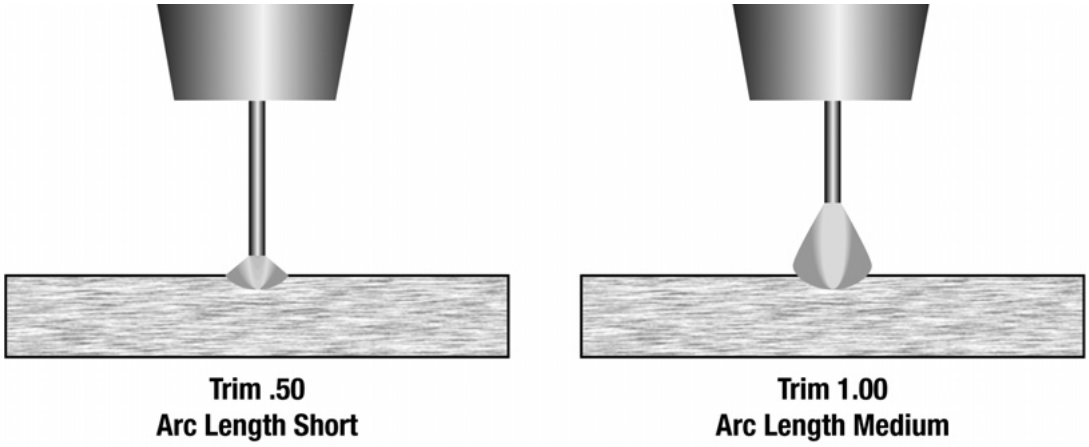

Most pulse welding programs are synergic. As the wire feed speed is adjusted, the POWER WAVE® S700 will automatically recalculate the waveform parameters to maintain similar arc properties.

The POWER WAVE® S700 utilizes “adaptive control” to compensate for changes in the electrical stick-out while welding. (Electrical stick-out is the distance from the contact tip to the work piece.) The POWER WAVE® S700 waveforms are optimized for a 0.75” stick-out. The adaptive behavior supports a range of stick-outs from 0.50 to 1.25”. At very low or high wire feed speeds, the adaptive range may be less due to reaching physical limitations of the welding process.

UltimArc™ Control adjusts the focus or shape of the arc. UltimArc™ Control is adjustable from -10.0 to +10.0 with a nominal setting of 0.0. Increasing the UltimArc™ Control increases the pulse frequency and background current while decreasing the peak current. This results in a tight, stiff arc used for high speed sheet metal welding. Decreasing the UltimArc™ Control decreases the pulse frequency and background current while increasing the peak current. This results in a soft arc good for out of position welding. (See Figure B.4)

WELD PROCESS ADJUSTMENTS

Depending on the weld mode, there are a number of adjustments that can be made, including but not limited to Current, Voltage and WFS. These adjustments control the basic parameters of the weld.

FIGURE B.4

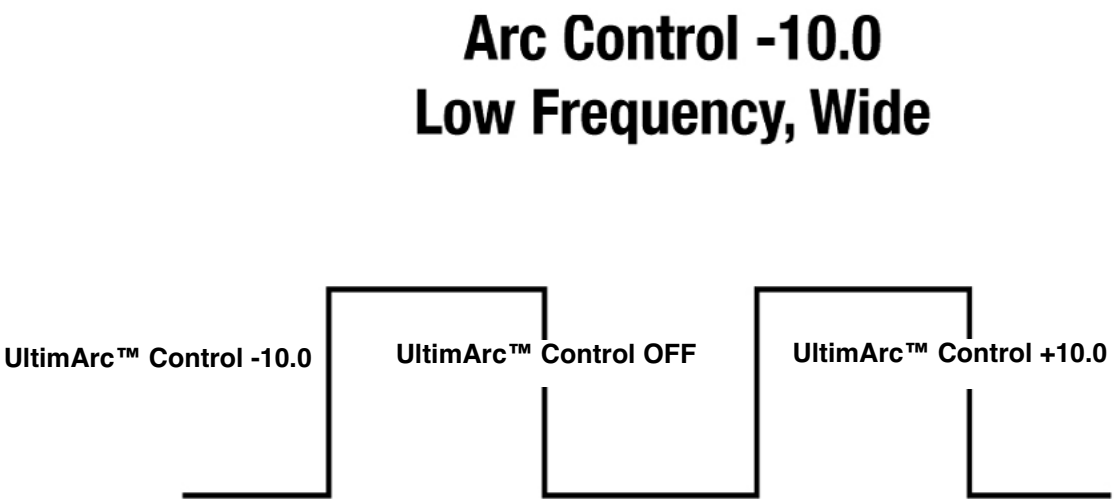

KITS, OPTIONS AND ACCESSORIES

All Kits Options and Accessories are found on the Web site: (**www.lincolnelectric.com)**

FACTORY INSTALLED

None Available

FIELD INSTALLED OPTIONS

GENERAL OPTIONS

CE/C-Tick Filter Kit (not an option for K3557-1)
Filter mounts inside the power source to meet EMC requirements of Europe and Australia.
Order K2444

Work Voltage Sense Lead Kit
Required to accurately monitor voltage at the arc.
Order K940-25 for 25 ft (7.6 m)
Order K1811-50 for 50 ft (15.2 m)
Order K1811-100 for 100 ft (30.4 m)

Deluxe Adjustable Gas Regulator & Hose Kit
Accommodates CO_2, Argon, or Argon-blend gas cylinders. Includes a cylinder pressure gauge, dual scale flow gauge and 4.3 ft. (1.3 m) gas hose.
Order K586-1

Power Wave® Connectivity Hub
Mounts on the case front of the Power Wave® S700, easily connect existing or remote Power Wave® systems for complete visibility to welding operations.
Order K4884-2

SAFETY PRECAUTIONS

⚠ WARNING

ELECTRIC SHOCK can kill.

- **Do not operate with covers removed.**
- **Turn off power source before installing or servicing.**
- **Do not touch electrically hot parts.**
- **Turn the input power to the welding power source off at the fuse box before working in the terminal strip.**
- **Only qualified personnel should install, use or service this equipment.**

VISUAL INSPECTION

Clean interior of machine with a low pressure air stream. Make a thorough inspection of all components. Look for signs of overheating, broken leads or other obvious problems. Many problems can be uncovered with a good visual inspection.

ROUTINE MAINTENANCE

Approximately every 6 months the machine should be cleaned with a low pressure air stream. Keeping the machine clean will result in cooler operation and higher reliability. Be sure to clean these areas:

- All printed circuit boards
- Power switch
- Main transformer
- Input rectifier
- Heatsink fins
- Auxiliary Transformers
- Reconnect Switch Area
- Fan (Blow air through the rear louvers)

Examine the sheet metal case for dents or breakage. Repair the case as required. Keep the case in good condition to insure that high voltage parts are protected and correct spacings are maintained. All external sheet metal screws must be in place to insure case strength and electrical ground continuity.

PERIODIC MAINTENANCE

Calibration of the Power Wave® S700 is critical to its operation. Generally speaking the calibration will not need adjustment. However, neglected or improperly calibrated machines may not yield satisfactory weld performance. To ensure optimal performance, the calibration of output Voltage and Current should be checked yearly, using calibrated meters in test modes.

Thermal Protection

Thermostats protect the machine from excessive operating temperatures. Excessive temperatures may be caused by a lack of cooling air or operating the machine beyond the duty cycle and output rating. If excessive operating temperature should occur, the thermostat will prevent output voltage or current. The meter will remain energized during this time. Thermostats are self-resetting once the machine cools sufficiently. If the thermostat shutdown was caused by excessive output or duty cycle and the fan is operating normally, the Power Switch may be left on and the reset should occur within a 15 minute period.

CALIBRATION SPECIFICATION

Output Voltage and Current are calibrated at the factory. Generally speaking the machine calibration will not need adjustment. However, if the weld performance changes, or the yearly calibration check reveals a problem, use the calibration section of the **Power Wave® Manager Diagnostics Utility** to make the appropriate adjustments.

The calibration procedure itself requires the use of a grid, and certified actual meters for voltage and current. The accuracy of the calibration will be directly affected by the accuracy of the measuring equipment you use. The Diagnostics Utility includes detailed instructions, and is available on **(http://www.powerwavesoftware.com/).**

HOW TO USE TROUBLESHOOTING GUIDE

⚠ WARNING

Service and Repair should only be performed by Lincoln Electric Factory Trained Personnel. Unauthorized repairs performed on this equipment may result in danger to the technician and machine operator and will invalidate your factory warranty. For your safety and to avoid Electrical Shock, please observe all safety notes and precautions detailed throughout this manual.

This Troubleshooting Guide is provided to help you locate and repair possible machine malfunctions. Simply follow the three-step procedure listed below.

Step 1. LOCATE PROBLEM (SYMPTOM).
Look under the column labeled “PROBLEM (SYMPTOMS)”. This column describes possible symptoms that the machine may exhibit. Find the listing that best describes the symptom that the machine is exhibiting.

Step 2. POSSIBLE CAUSE.
The second column labeled “POSSIBLE CAUSE” lists the obvious external possibilities that may contribute to the machine symptom.

Step 3. RECOMMENDED COURSE OF ACTION
This column provides a course of action for the Possible Cause, generally it states to contact your local Lincoln Authorized Field Service Facility.

If you do not understand or are unable to perform the Recommended Course of Action safely, contact your local Lincoln Authorized Field Service Facility.

⚠ WARNING

ELECTRIC SHOCK can kill.

- **Turn the input power OFF at the welding power source before installation or changing drive rolls and/or guides.**
- **Do not touch electrically live parts.**
- **When inching with the gun trigger, electrode and drive mechanism are "hot" to work and ground and could remain energized several seconds after the gun trigger is released.**
- **Welding power source must be connected to system ground per the National Electrical Code or any applicable local codes.**
- **Only qualified personnel should perform maintenance work.**

Observe all additional Safety Guidelines detailed throughout this manual.

⚠ CAUTION

If for any reason you do not understand the test procedures or are unable to perform the tests/repairs safely, contact your **Local Lincoln Authorized Field Service Facility** for technical troubleshooting assistance before you proceed.

USING THE STATUS LED TO TROUBLESHOOT SYSTEM PROBLEMS

The Power Wave® is equipped with a status light. If a problem occurs it is important to note the condition of the status light. **Therefore, prior to cycling power to the system, check the power source status light for error sequences as noted below.**

Included in this section is information about the power source Status LED, and some basic troubleshooting charts for both machine and weld performance.

Troubleshooting the Power Wave® Using the Status LED

The **STATUS LIGHT** is a two color light that indicates system errors. Normal operation is a steady green light. Error conditions are indicated in the following chart.

TABLE E.1

Light Condition	Meaning Main control board status light and Input control board
Steady Green	System OK. Power source is operational, and is communicating normally with all healthy peripheral equipment connected to its ArcLink network.
Blinking Green	Occurs during power up or a system reset, and indicates the POWER WAVE® S700 is mapping (identifying) each component in the system. Normal for first 1-10 seconds after power is turned on, or if the system configuration is changed during operation.
Alternating Green and Red	Non-recoverable system fault. If the Status lights are flashing any combination of red and green, errors are present. **Read the error code(s) before the machine is turned off.** **Error Code interpretation** through the Status light is detailed in the Service Manual. Individual code digits are flashed in red with a long pause between digits. If more than one code is present, the codes will be separated by a green light. Only active error conditions will be accessible through the Status Light. To clear the active error(s), turn power source off, and back on to reset.
Steady Red	Not applicable.
Blinking Red	Not applicable.

⚠ CAUTION

If for any reason you do not understand the test procedures or are unable to perform the tests/repairs safely, contact your **Local Lincoln Authorized Field Service Facility** for technical troubleshooting assistance before you proceed.

Observe all Safety Guidelines detailed throughout this manual

ERROR CODES FOR THE POWER WAVE® S700

The following is a list of possible error codes that the Power Wave® can output via the status light (see "Troubleshooting the Power Wave® System Using the Status LED").

MAIN CONTROL BOARD ("STATUS" LIGHT)	
Error Code #	**Indication**
31 Primary overcurrent error.	Excessive Primary current present. May be related to a switch board or output rectifier failure.
32 Capacitor "A" under voltage (Left side facing machine) 33 Capacitor "B" under voltage (Right side facing machine)	Low voltage on the main capacitors. May be caused by improper input configuration, or an open/short circuit in the primary side of the machine.
34 Capacitor "A" over voltage (Left side facing machine)	Excess voltage on the main capacitors. May be caused by improper input configuration, , excessive line voltage, or improper capacitor balance (see Error 43)
35 Capacitor "B" over voltage (Right side facing machine)	
36 Thermal error	Indicates over temperature. Usually accompanied by Thermal LED. Check fan operation. Be sure process does not exceed duty cycle limit of the machine.
37 Softstart error	Capacitor precharge failed. Usually accompanied by codes 32-35.
41 Secondary overcurrent error	The secondary (weld) current limit has been exceeded. When this occurs the machine output will phase back to 100 amps, typically resulting in a condition referred to as "noodle welding".
43 Capacitor delta error	The maximum voltage difference between the main capacitors has been exceeded. May be accompanied by errors 32-35. May be caused by an open or short in the primary or secondary circuit(s).
49 Single phase error	Indicates machine is running on single phase input power. Usually caused by the loss of the middle leg (L2).
Other	Error codes that contain three or four digits are defined as fatal errors. These codes generally indicate internal errors on the Power Source Control Board. If cycling the input power on the machine does not clear the error, contact the Service Department.

⚠ CAUTION

If for any reason you do not understand the test procedures or are unable to perform the tests/repairs safely, contact your **Local Lincoln Authorized Field Service Facility** for technical troubleshooting assistance before you proceed.

Observe all Safety Guidelines detailed throughout this manual

PROBLEMS (SYMPTOMS)	POSSIBLE CAUSE	RECOMMENDED COURSE OF ACTION
Basic Machine Problems		
Major physical or electrical damage is evident when the sheet metal covers are removed.	Contact your local authorized **Lincoln Electric Field Service facility** for technical assistance.	
Input fuses keep blowing, or input breaker keeps tripping.	1. Make certain that fuses or breakers are properly sized. 2. Welding procedure is drawing too much output current, or duty cycle is too high. 3. There is internal damage to the power source.	1. See Installation section of this manual for recommended fuse and breaker sizes. 2. Reduce output current, duty cycle, or both. 3. Contact an authorized **Lincoln Electric Service facility**.
Machine will not power up (no lights, no fan, etc.)	1. Make certain that the Power Switch (SW1) is in the “ON" position. 2. Fuse F1 (in reconnect area) may have opened. 3. Input voltage selection made improperly. 4. Circuit breaker CB1 (on case back) may have opened.	1. Check 2. Replace. Also, check input voltage selection. 3. Power down, check input voltage reconnect according to diagram on reconnect cover. 4. Reset.
Thermal LED is lit.	1. Output rectifier thermostat has opened. After machine has cooled, reduce load, duty cycle, or both. 2. DC Bus PC board thermostat has opened.	1. Check for material blocking intake or exhaust louvers. 2. Check for excessive load on 40VDC supply.
Machine won't weld, can’t get any output. (CR1 will not pull in.)	1. Input voltage is too low or too high. 2. If the Thermal LED is also lit. 3. Primary current limit has been exceeded. Possible short in output circuit. Turn machine off. Remove all loads from the output of the machine. Turn back on. 4. This problem will normally be accompanied by an error code. Error codes are displayed as a series of red and green flashes by the status light.	1. Make certain that input voltage is proper, according to the Rating Plate located on the rear of the machine. 2. See “Yellow Thermal LED is Lit" section. 3. If condition persists, turn power off, and contact an authorized Lincoln Electric Field Service facility. 4. See “Troubleshooting the Power Wave / Power Feed System Using the Status LED” section of this text.

⚠ CAUTION

If for any reason you do not understand the test procedures or are unable to perform the tests/repairs safely, contact your **Local Lincoln Authorized Field Service Facility** for technical troubleshooting assistance before you proceed.

Observe all Safety Guidelines detailed throughout this manual

PROBLEMS (SYMPTOMS)	POSSIBLE CAUSE	RECOMMENDED COURSE OF ACTION
Basic Machine Problems (Continued)		
Machine won't produce full output.	1. Input voltage may be too low, limiting output capability of the power source. 2. Input may be single phased. 3. Secondary current or voltage may not be properly calibrated.	1. Make certain that the input voltage is proper, according to the Rating Plate located on the rear of the machine. 2. Make certain the input voltage is proper on all three input lines. 3. Check calibration.
Auxiliary receptacle is dead -- no auxiliary voltage.	1. Circuit breaker CB2 (on case back) may have opened. 2. Fuse F1 (in reconnect area) may have opened.	1. Reset. 2. Replace.
The Power Wave is triggered to weld, but there is no output.	1. Fuse F1 (in reconnect area) may have opened.	1. Replace.

⚠ CAUTION

If for any reason you do not understand the test procedures or are unable to perform the tests/repairs safely, contact your **Local Lincoln Authorized Field Service Facility** for technical troubleshooting assistance before you proceed.

POWER WAVE® S700 (380-415/ 440-460/ 500/ 550- 575) POWER SOURCE WIRING DIAGRAM

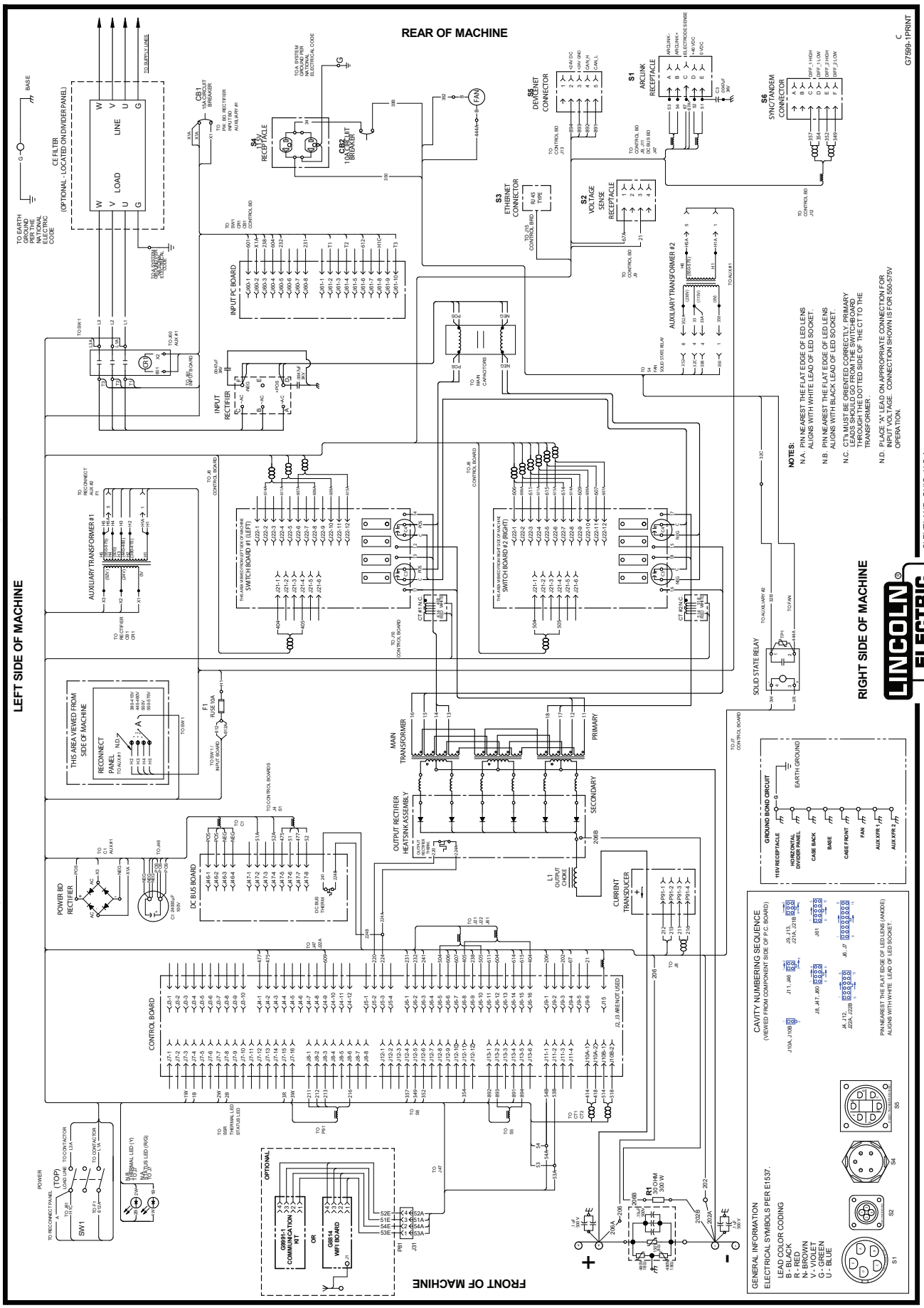

NOTE: This diagram is for reference only. It may not be accurate for all machines covered by this manual. The specific diagram for a particular code is pasted inside the machine on one of the enclosure panels. If the diagram is illegible, write to the Service Department for a replacement. Give the equipment code number.

POWER WAVE® S700 (200-208/ 220-230) POWER SOURCE WIRING DIAGRAM

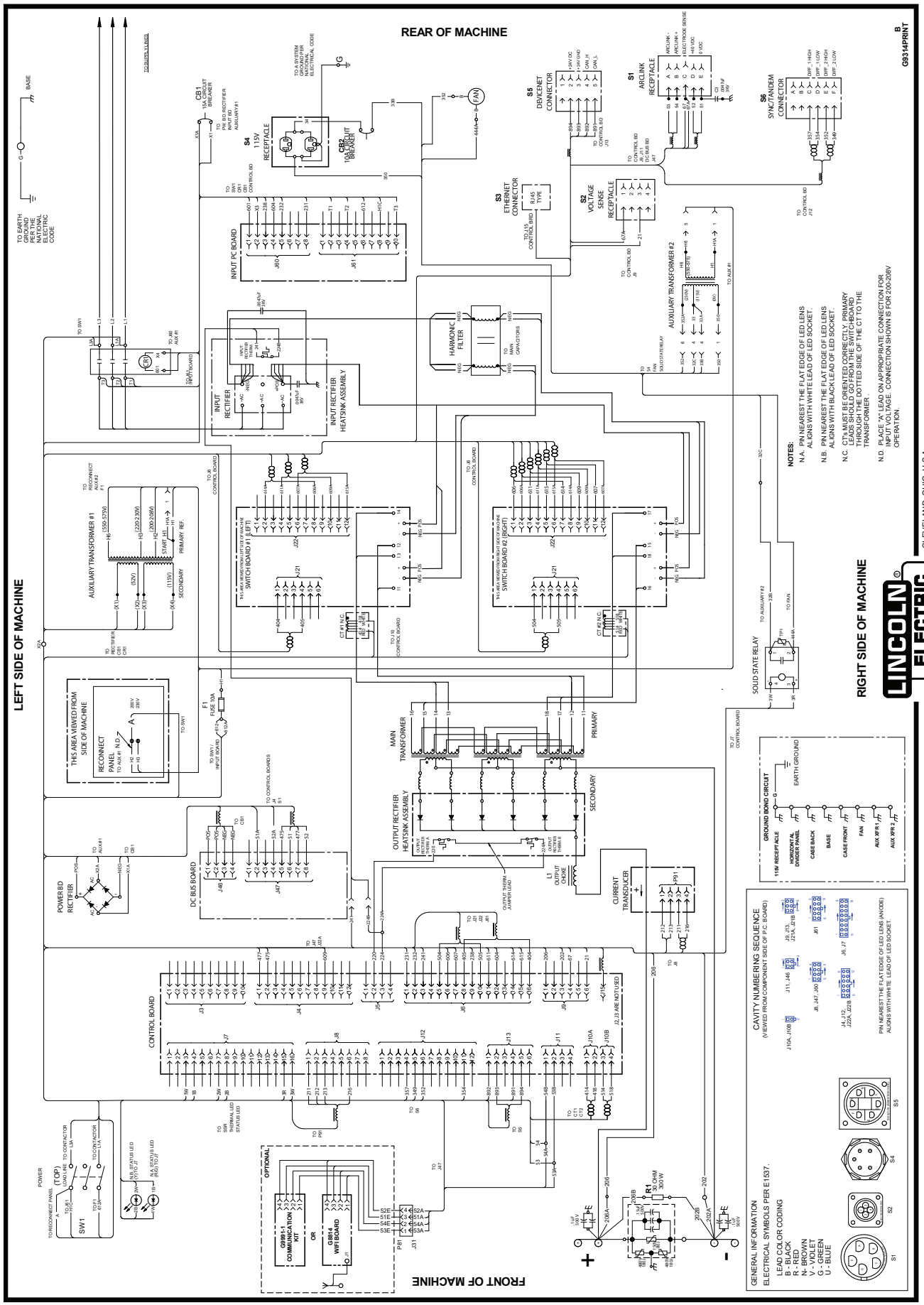

NOTE: This diagram is for reference only. It may not be accurate for all machines covered by this manual. The specific diagram for a particular code is pasted inside the machine on one of the enclosure panels. If the diagram is illegible, write to the Service Department for a replacement. Give the equipment code number.

POWER WAVE® S700 WITH CONNECTIVITY HUB WIRING DIAGRAM (CODE 13198)

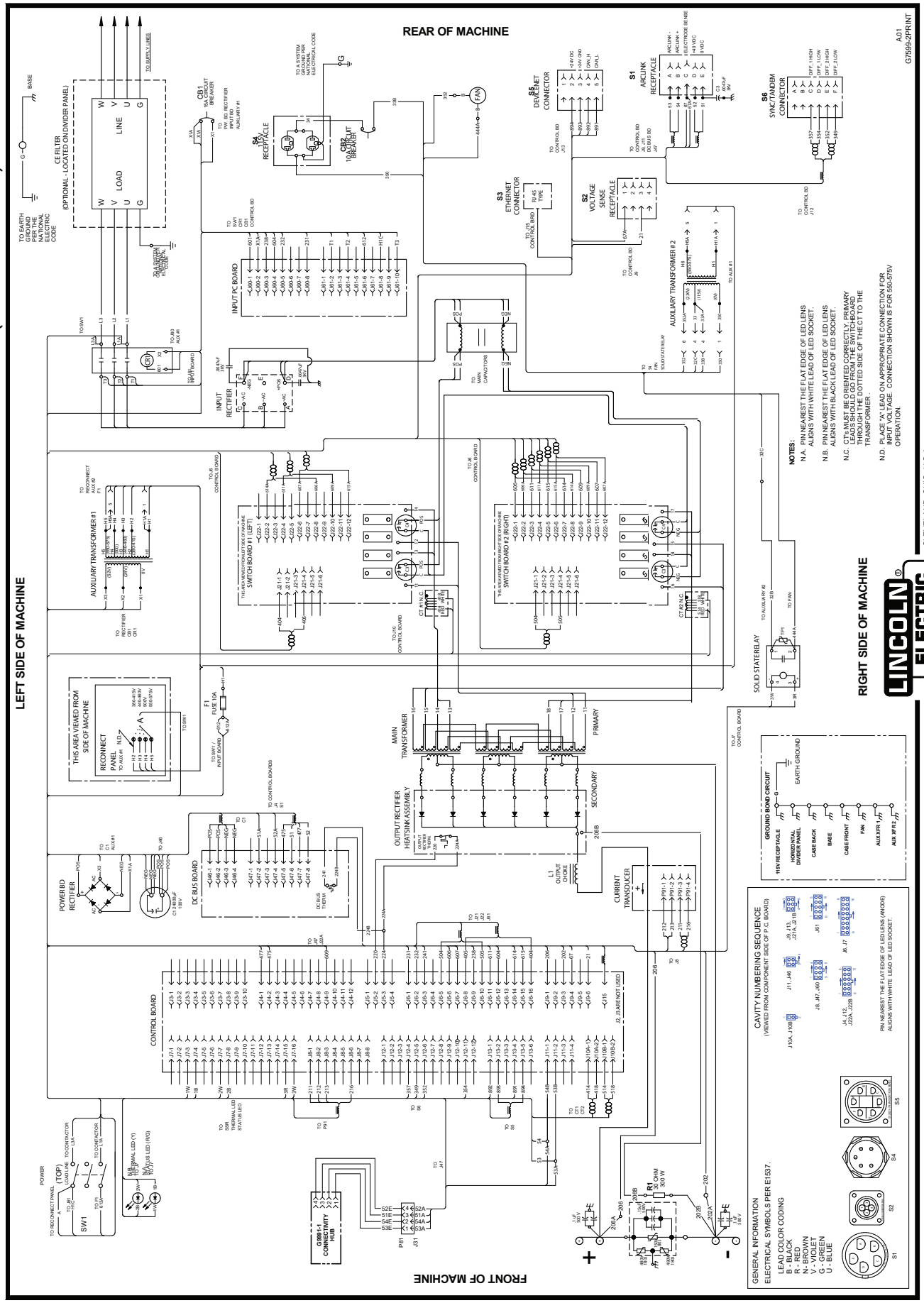

NOTE: This diagram is for reference only. It may not be accurate for all machines covered by this manual. The specific diagram for a particular code is pasted inside the machine on one of the enclosure panels. If the diagram is illegible, write to the Service Department for a replacement. Give the equipment code number.

POWER WAVE™ S700 (380-415/ 440-460/ 500/ 550- 575) POWER SOURCE WIRING DIAGRAM CODE 13209, 13210

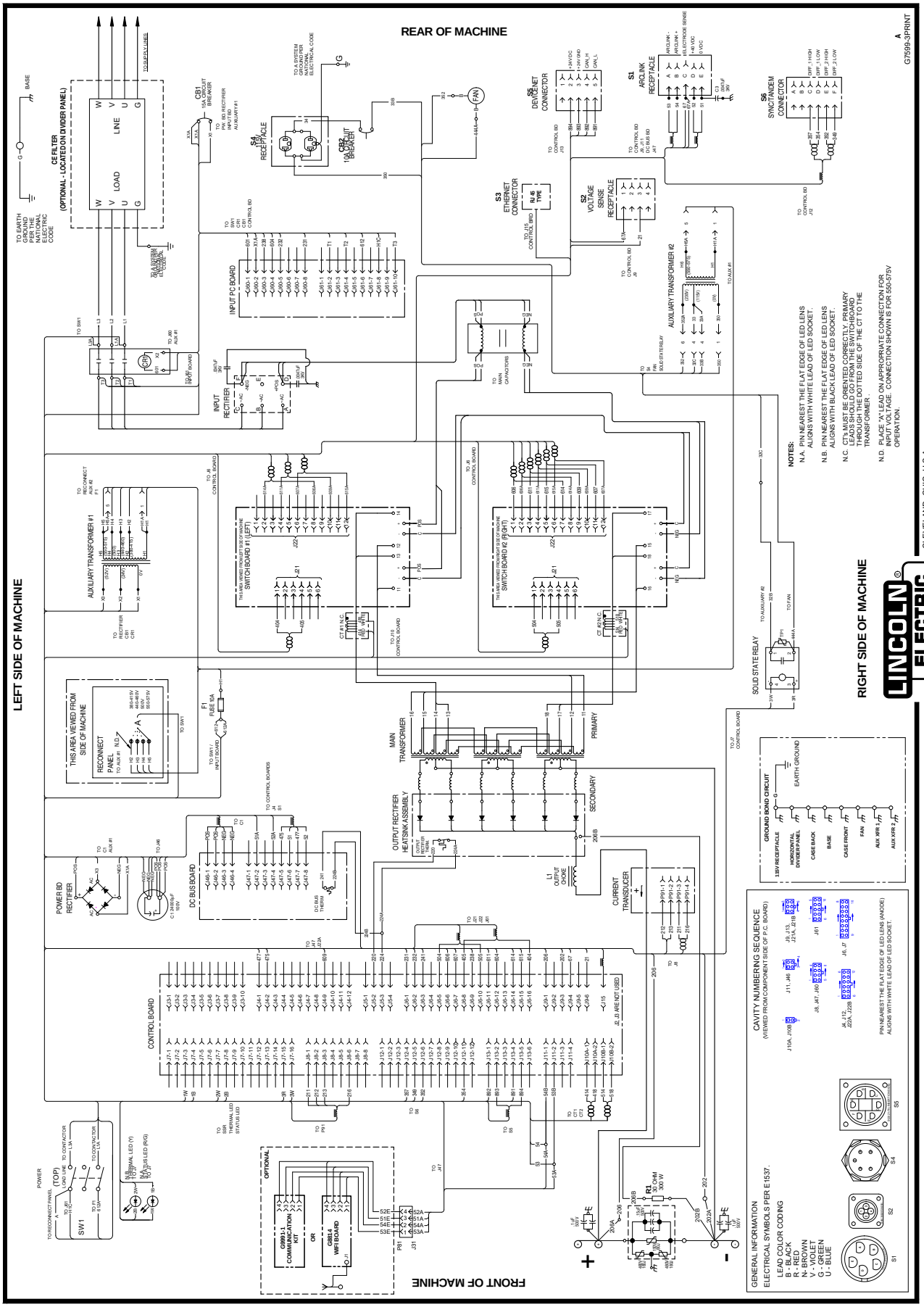

NOTE: This diagram is for reference only. It may not be accurate for all machines covered by this manual. The specific diagram for a particular code is pasted inside the machine on one of the enclosure panels. If the diagram is illegible, write to the Service Department for a replacement. Give the equipment code number.

DIMENSION PRINT

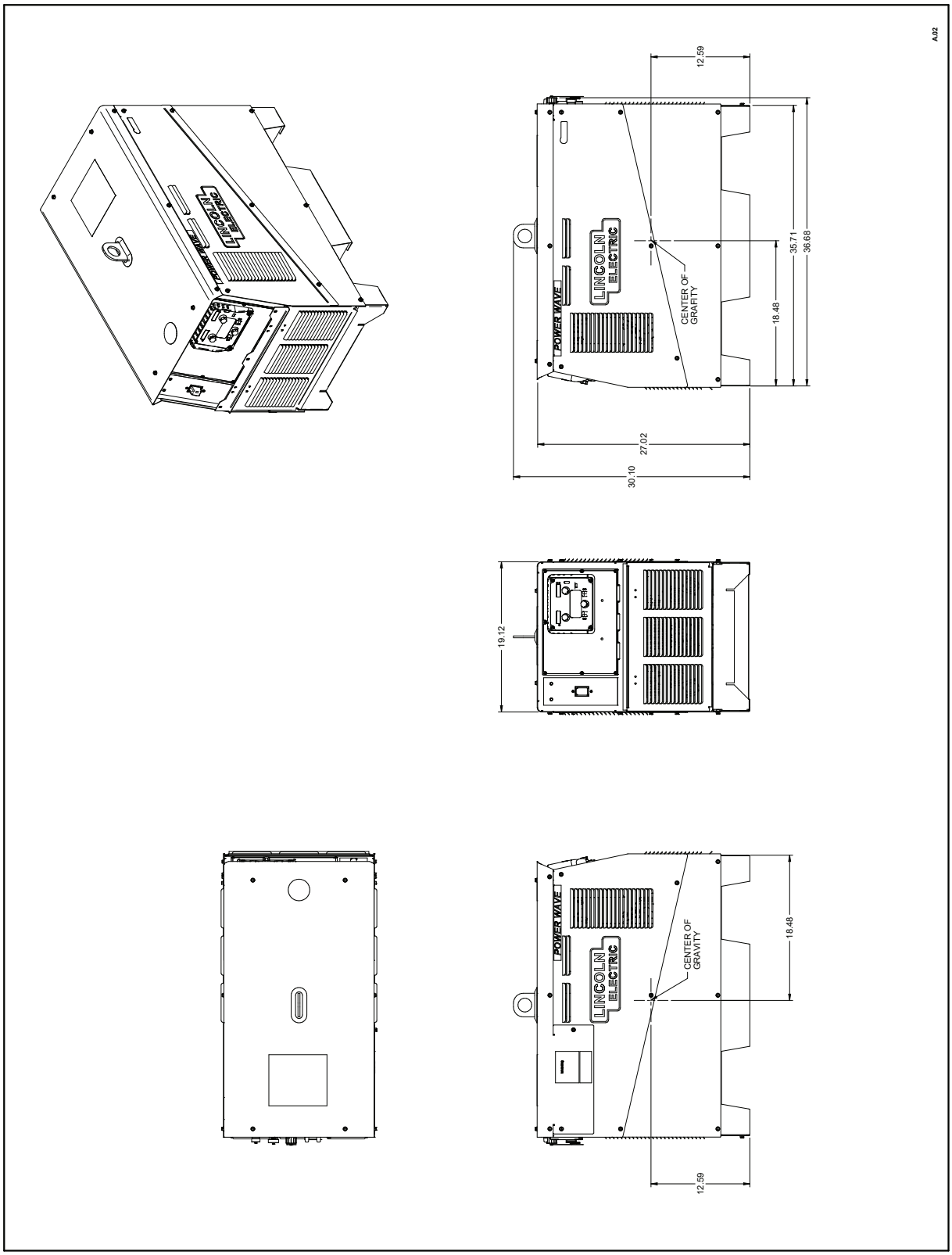

Power Wave® S700 With Connectivity Hub Kit Dimensions (Code 13198)

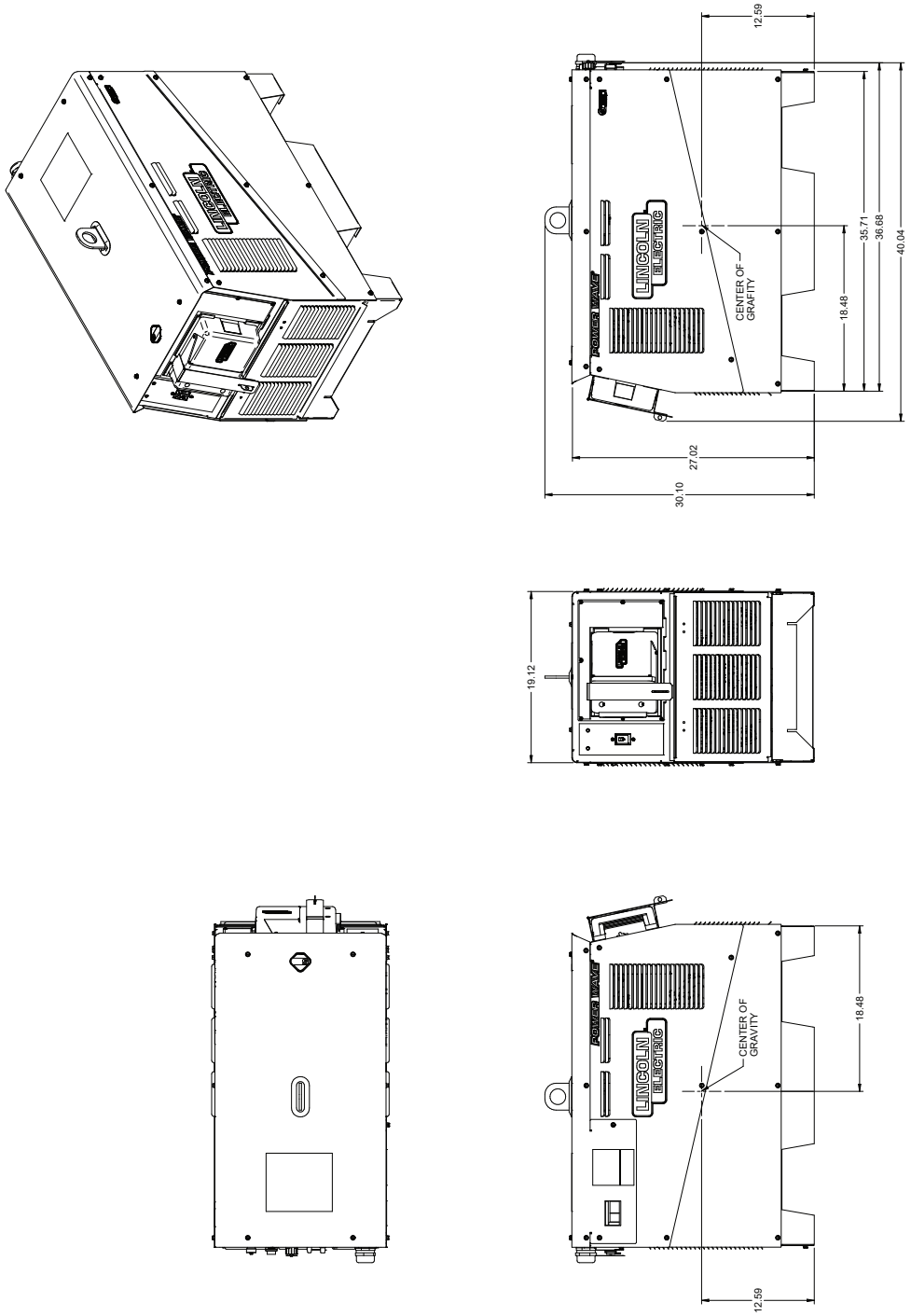

L16371-1

This page intentionally left blank.

WARNING	● Do not touch electrically live parts or electrode with skin or wet clothing. ● Insulate yourself from work and ground.	● Keep flammable materials away.	● Wear eye, ear and body protection.
Spanish **AVISO DE PRECAUCION**	● No toque las partes o los electrodos bajo carga con la piel o ropa mojada. ● Aislese del trabajo y de la tierra.	● Mantenga el material combustible fuera del área de trabajo.	● Protéjase los ojos, los oídos y el cuerpo.
French **ATTENTION**	● Ne laissez ni la peau ni des vêtements mouillés entrer en contact avec des pièces sous tension. ● Isolez-vous du travail et de la terre.	● Gardez à l'écart de tout matériel inflammable.	● Protégez vos yeux, vos oreilles et votre corps.
German **WARNUNG**	● Berühren Sie keine stromführenden Teile oder Elektroden mit Ihrem Körper oder feuchter Kleidung! ● Isolieren Sie sich von den Elektroden und dem Erdboden!	● Entfernen Sie brennbarres Material!	● Tragen Sie Augen-, Ohren- und Körperschutz!
Portuguese **ATENÇÃO**	● Não toque partes elétricas e electrodos com a pele ou roupa molhada. ● Isole-se da peça e terra.	● Mantenha inflamáveis bem guardados.	● Use proteção para a vista, ouvido e corpo.
Japanese **注意事項**	● 通電中の電気部品、又は溶材にヒフやぬれた布で触れないこと。 ● 施工物やアースから身体が絶縁されている様にして下さい。	● 燃えやすいものの側での溶接作業は絶対にしてはなりません。	● 目、耳及び身体に保護具をして下さい。
Chinese **警 告**	● 皮肤或濕衣物切勿接觸帶電部件及銲條。 ● 使你自己與地面和工件絶緣。	● 把一切易燃物品移離工作場所。	● 佩戴眼、耳及身體勞動保護用具。
Korean **위 험**	● 전도체나 용접봉을 젖은 헝겁 또는 피부로 절대 접촉치 마십시요. ● 모재와 접지를 접촉치 마십시요.	● 인화성 물질을 접근 시키지 마시요.	● 눈, 귀와 몸에 보호장구를 착용하십시요.
Arabic **تحذير**	● لا تلمس الاجزاء التي يسري فيها التيار الكهربائي أو الالكترود بجلد الجسم أو بالملابس المبللة بالماء. ● ضع عازلا على جسمك خلال العمل.	● ضع المواد القابلة للاشتعال في مكان بعيد.	● ضع أدوات وملابس واقية على عينيك وأذنيك وجسمك.

READ AND UNDERSTAND THE MANUFACTURER'S INSTRUCTION FOR THIS EQUIPMENT AND THE CONSUMABLES TO BE USED AND FOLLOW YOUR EMPLOYER'S SAFETY PRACTICES.

SE RECOMIENDA LEER Y ENTENDER LAS INSTRUCCIONES DEL FABRICANTE PARA EL USO DE ESTE EQUIPO Y LOS CONSUMIBLES QUE VA A UTILIZAR, SIGA LAS MEDIDAS DE SEGURIDAD DE SU SUPERVISOR.

LISEZ ET COMPRENEZ LES INSTRUCTIONS DU FABRICANT EN CE QUI REGARDE CET EQUIPMENT ET LES PRODUITS A ETRE EMPLOYES ET SUIVEZ LES PROCEDURES DE SECURITE DE VOTRE EMPLOYEUR.

LESEN SIE UND BEFOLGEN SIE DIE BETRIEBSANLEITUNG DER ANLAGE UND DEN ELEKTRODENEINSATZ DES HERSTELLERS. DIE UNFALLVERHÜTUNGSVORSCHRIFTEN DES ARBEITGEBERS SIND EBENFALLS ZU BEACHTEN.

● Keep your head out of fumes. ● Use ventilation or exhaust to remove fumes from breathing zone.	● Turn power off before servicing.	● Do not operate with panel open or guards off.	**WARNING**
● Los humos fuera de la zona de respiración. ● Mantenga la cabeza fuera de los humos. Utilice ventilación o aspiración para gases.	● Desconectar el cable de alimentación de poder de la máquina antes de iniciar cualquier servicio.	● No operar con panel abierto o guardas quitadas.	Spanish **AVISO DE PRECAUCION**
● Gardez la tête à l'écart des fumées. ● Utilisez un ventilateur ou un aspirateur pour ôter les fumées des zones de travail.	● Débranchez le courant avant l'entretien.	● N'opérez pas avec les panneaux ouverts ou avec les dispositifs de protection enlevés.	French **ATTENTION**
● Vermeiden Sie das Einatmen von Schweibrauch! ● Sorgen Sie für gute Be- und Entlüftung des Arbeitsplatzes!	● Strom vor Wartungsarbeiten abschalten! (Netzstrom völlig öffnen; Maschine anhalten!)	● Anlage nie ohne Schutzgehäuse oder Innenschutzverkleidung in Betrieb setzen!	German **WARNUNG**
● Mantenha seu rosto da fumaça. ● Use ventilação e exhaustão para remover fumo da zona respiratória.	● Não opere com as tampas removidas. ● Desligue a corrente antes de fazer serviço. ● Não toque as partes elétricas nuas.	● Mantenha-se afastado das partes moventes. ● Não opere com os paineis abertos ou guardas removidas.	Portuguese **ATENÇÃO**
● ヒュームから頭を離すようにして下さい。 ● 換気や排煙に十分留意して下さい。	● メンテナンス・サービスに取りかかる際には、まず電源スイッチを必ず切って下さい。	● パネルやカバーを取り外したままで機械操作をしないで下さい。	Japanese **注意事項**
● 頭部遠離煙霧。 ● 在呼吸區使用通風或排風器除煙。	● 維修前切斷電源。	● 儀表板打開或沒有安全罩時不準作業。	Chinese **警 告**
● 얼굴로부터 용접가스를 멀리하십시요. ● 호흡지역으로부터 용접가스를 제거하기 위해 가스제거기나 통풍기를 사용하십시요.	● 보수전에 전원을 차단하십시요.	● 판넬이 열린 상태로 작동치 마십시요.	Korean **위 험**
● ابعد رأسك بعيداً عن الدخان. ● استعمل التهوية أو جهاز ضغط الدخان للخارج لكي تبعد الدخان عن المنطقة التي تتنفس فيها.	● اقطع التيار الكهربائي قبل القيام بأية صيانة.	● لا تشغل هذا الجهاز اذا كانت الاغطية الحديدية الواقية ليست عليه.	Arabic **تحذير**

LEIA E COMPREENDA AS INSTRUÇÕES DO FABRICANTE PARA ESTE EQUIPAMENTO E AS PARTES DE USO, E SIGA AS PRÁTICAS DE SEGURANÇA DO EMPREGADOR.

使う機械や溶材のメーカーの指示書をよく読み、まず理解して下さい。そして貴社の安全規定に従って下さい。

請詳細閱讀並理解製造廠提供的説明以及應該使用的銀捍材料，並請遵守貴方的有関勞動保護規定。

이 제품에 동봉된 작업지침서를 숙지하시고 귀사의 작업자 안전수칙을 준수하시기 바랍니다.

اقرأ بتمعن وافهم تعليمات المصنع المنتج لهذه المعدات والمواد قبل استعمالها واتبع تعليمات الوقاية لصاحب العمل.

CUSTOMER ASSISTANCE POLICY

The business of The Lincoln Electric Company is manufacturing and selling high quality welding equipment, consumables, and cutting equipment. Our challenge is to meet the needs of our customers and to exceed their expectations. On occasion, purchasers may ask Lincoln Electric for advice or information about their use of our products. We respond to our customers based on the best information in our possession at that time. Lincoln Electric is not in a position to warrant or guarantee such advice, and assumes no liability, with respect to such information or advice. We expressly disclaim any warranty of any kind, including any warranty of fitness for any customer's particular purpose, with respect to such information or advice. As a matter of practical consideration, we also cannot assume any responsibility for updating or correcting any such information or advice once it has been given, nor does the provision of information or advice create, expand or alter any warranty with respect to the sale of our products.

Lincoln Electric is a responsive manufacturer, but the selection and use of specific products sold by Lincoln Electric is solely within the control of, and remains the sole responsibility of the customer. Many variables beyond the control of Lincoln Electric affect the results obtained in applying these types of fabrication methods and service requirements.

Subject to Change – This information is accurate to the best of our knowledge at the time of printing. Please refer to www.lincolnelectric.com for any updated information.

THE LINCOLN ELECTRIC COMPANY
22801 St. Clair Avenue • Cleveland, OH • 44117-1199 • U.S.A.
Phone: +1.216.481.8100 • www.lincolnelectric.com