CLASSIC WIRING DIAGRAM M21972 REV: B

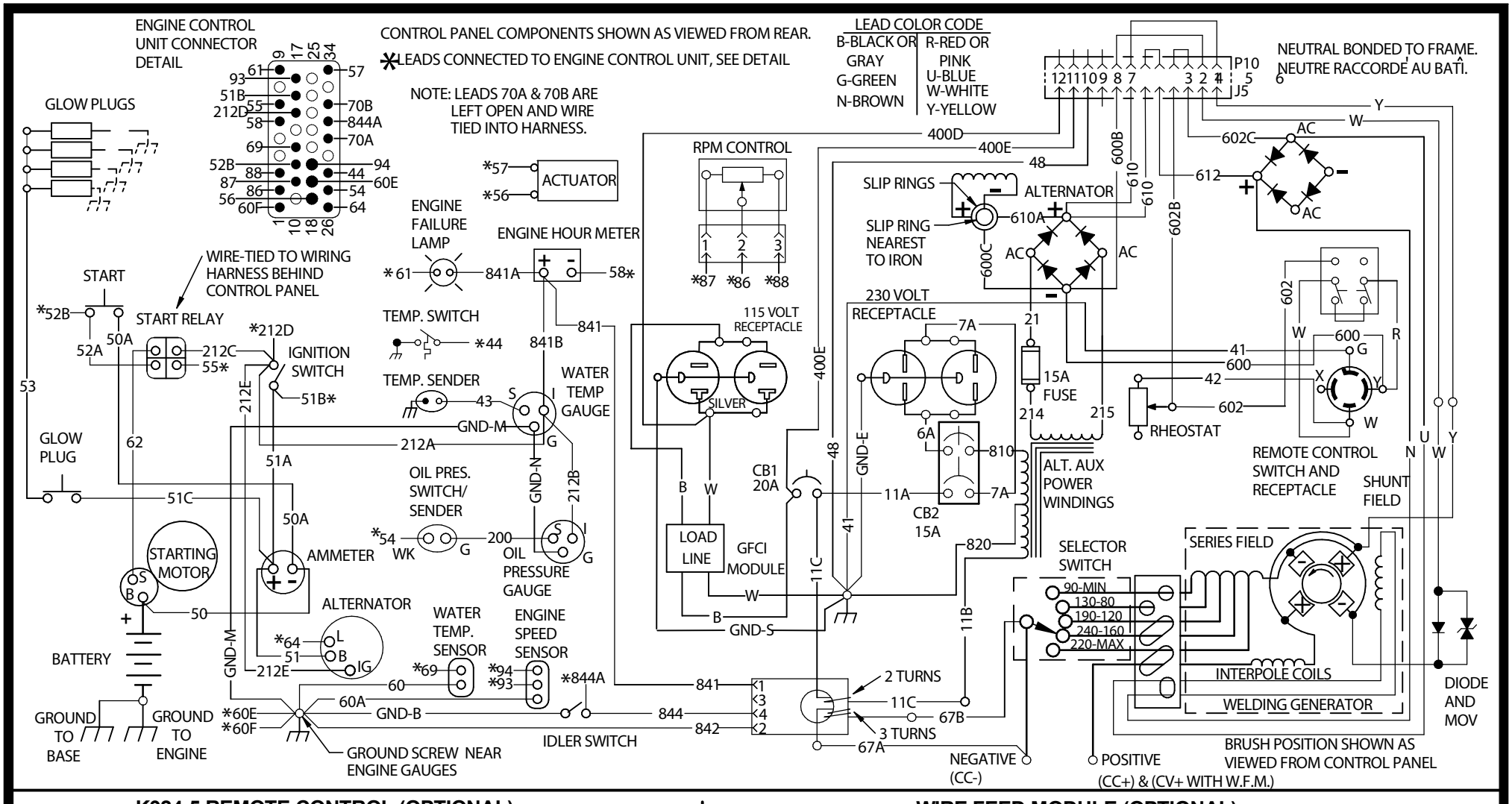

K924-5 REMOTE CONTROL (OPTIONAL)

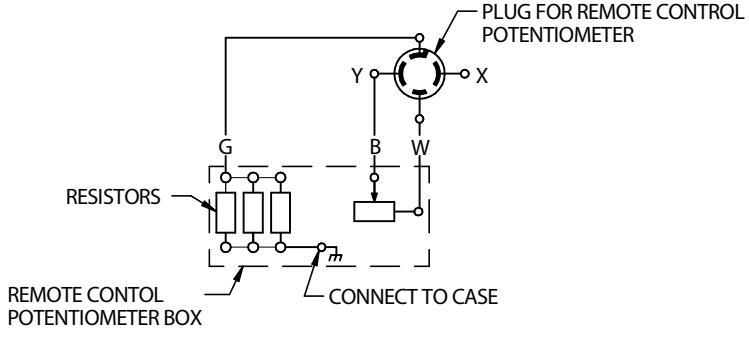

WIRE FEED MODULE (OPTIONAL)

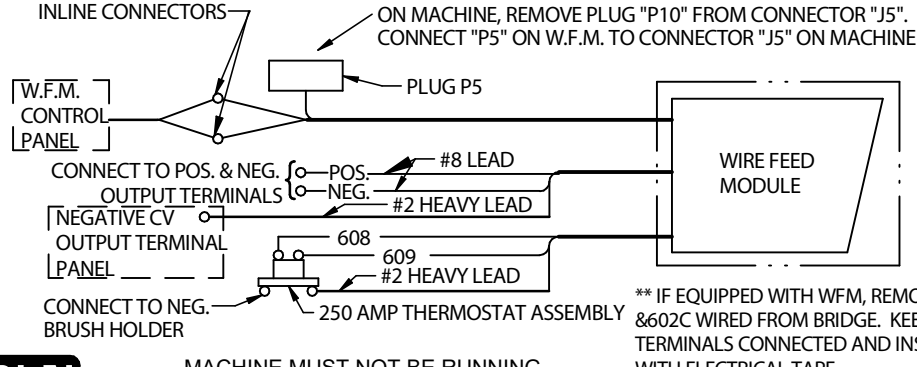

MACHINE MUST NOT BE RUNNING WHEN MAKING THESE CONNECTIONS.

** IF EQUIPPED WITH WFM, REMOVE U &602C WIRED FROM BRIDGE. KEEP LEAD TERMINALS CONNECTED AND INSULATE WITH ELECTRICAL TAPE.

LINCOLN ELECTRIC

12/21