Operator's Manual

Dual Maverick® 450

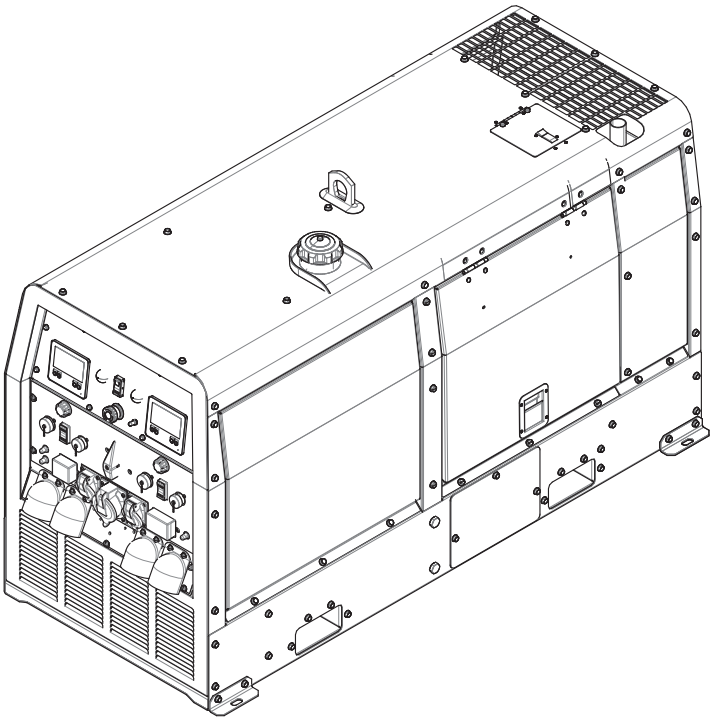

For use with machines having Code Numbers:

12723

Register your machine:
www.lincolnelectric.com/register

Authorized Service and Distributor Locator:
www.lincolnelectric.com/locator

Save for future reference

Date Purchased

Code: (ex: 10859)

Serial: (ex: U1060512345)

Need Help? Call 1.888.935.3877
to talk to a Service Representative

Hours of Operation:
8:00 AM to 6:00 PM (ET) Mon. thru Fri.

After hours?
Use "Ask the Experts" at lincolnelectric.com
A Lincoln Service Representative will contact you no later than the following business day.

For Service outside the USA:
Email: globalservice@lincolnelectric.com

IM10481-A | Issue Date Dec-21

© Lincoln Global, Inc. All Rights Reserved.

THE LINCOLN ELECTRIC COMPANY
22801 St. Clair Avenue • Cleveland, OH • 44117-1199 • U.S.A.
Phone: +1.216.481.8100 • www.lincolnelectric.com

THANK YOU FOR SELECTING A QUALITY PRODUCT BY LINCOLN ELECTRIC.

PLEASE EXAMINE CARTON AND EQUIPMENT FOR DAMAGE IMMEDIATELY

When this equipment is shipped, title passes to the purchaser upon receipt by the carrier. Consequently, claims for material damaged in shipment must be made by the purchaser against the transportation company at the time the shipment is received.

SAFETY DEPENDS ON YOU

Lincoln arc welding and cutting equipment is designed and built with safety in mind. However, your overall safety can be increased by proper installation ... and thoughtful operation on your part. **DO NOT INSTALL, OPERATE OR REPAIR THIS EQUIPMENT WITHOUT READING THIS MANUAL AND THE SAFETY PRECAUTIONS CONTAINED THROUGHOUT.** And, most importantly, think before you act and be careful.

⚠ WARNING

This statement appears where the information must be followed exactly to avoid serious personal injury or loss of life.

⚠ CAUTION

This statement appears where the information must be followed to avoid minor personal injury or damage to this equipment.

KEEP YOUR HEAD OUT OF THE FUMES.

DON'T get too close to the arc. Use corrective lenses if necessary to stay a reasonable distance away from the arc.

READ and obey the Safety Data Sheet (SDS) and the warning label that appears on all containers of welding materials.

USE ENOUGH VENTILATION or exhaust at the arc, or both, to keep the fumes and gases from your breathing zone and the general area.

IN A LARGE ROOM OR OUTDOORS, natural ventilation may be adequate if you keep your head out of the fumes (See below).

USE NATURAL DRAFTS or fans to keep the fumes away from your face.

If you develop unusual symptoms, see your supervisor. Perhaps the welding atmosphere and ventilation system should be checked.

WEAR CORRECT EYE, EAR & BODY PROTECTION

PROTECT your eyes and face with welding helmet properly fitted and with proper grade of filter plate (See ANSI Z49.1).

PROTECT your body from welding spatter and arc flash with protective clothing including woolen clothing, flame-proof apron and gloves, leather leggings, and high boots.

PROTECT others from splatter, flash, and glare with protective screens or barriers.

IN SOME AREAS, protection from noise may be appropriate.

BE SURE protective equipment is in good condition.

Also, wear safety glasses in work area **AT ALL TIMES.**

SPECIAL SITUATIONS

DO NOT WELD OR CUT containers or materials which previously had been in contact with hazardous substances unless they are properly cleaned. This is extremely dangerous.

DO NOT WELD OR CUT painted or plated parts unless special precautions with ventilation have been taken. They can release highly toxic fumes or gases.

Additional precautionary measures

PROTECT compressed gas cylinders from excessive heat, mechanical shocks, and arcs; fasten cylinders so they cannot fall.

BE SURE cylinders are never grounded or part of an electrical circuit.

REMOVE all potential fire hazards from welding area.

ALWAYS HAVE FIRE FIGHTING EQUIPMENT READY FOR IMMEDIATE USE AND KNOW HOW TO USE IT.

SECTION A: WARNINGS

CALIFORNIA PROPOSITION 65 WARNINGS

WARNING: Breathing diesel engine exhaust exposes you to chemicals known to the State of California to cause cancer and birth defects, or other reproductive harm.

- Always start and operate the engine in a well-ventilated area.
- If in an exposed area, vent the exhaust to the outside.
- Do not modify or tamper with the exhaust system.
- Do not idle the engine except as necessary.

For more information go to www.P65 warnings.ca.gov/diesel

WARNING: This product, when used for welding or cutting, produces fumes or gases which contain chemicals known to the State of California to cause birth defects and, in some cases, cancer. (California Health & Safety Code § 25249.5 *et seq.)*

WARNING: Cancer and Reproductive Harm www.P65warnings.ca.gov

ARC WELDING CAN BE HAZARDOUS. PROTECT YOURSELF AND OTHERS FROM POSSIBLE SERIOUS INJURY OR DEATH. KEEP CHILDREN AWAY. PACEMAKER WEARERS SHOULD CONSULT WITH THEIR DOCTOR BEFORE OPERATING.

Read and understand the following safety highlights. For additional safety information, it is strongly recommended that you purchase a copy of "Safety in Welding & Cutting - ANSI Standard Z49.1" from the American Welding Society, P.O. Box 351040, Miami, Florida 33135 or CSA Standard W117.2. A Free copy of "Arc Welding Safety" booklet E205 is available from the Lincoln Electric Company, 22801 St. Clair Avenue, Cleveland, Ohio 44117-1199.

BE SURE THAT ALL INSTALLATION, OPERATION, MAINTENANCE AND REPAIR PROCEDURES ARE PERFORMED ONLY BY QUALIFIED INDIVIDUALS.

FOR ENGINE POWERED EQUIPMENT.

1.a. Turn the engine off before troubleshooting and maintenance work unless the maintenance work requires it to be running.

1.b. Operate engines in open, well-ventilated areas or vent the engine exhaust fumes outdoors.

1.c. Do not add the fuel near an open flame welding arc or when the engine is running. Stop the engine and allow it to cool before refueling to prevent spilled fuel from vaporizing on contact with hot engine parts and igniting. Do not spill fuel when filling tank. If fuel is spilled, wipe it up and do not start engine until fumes have been eliminated.

1.d. Keep all equipment safety guards, covers and devices in position and in good repair. Keep hands, hair, clothing and tools away from V-belts, gears, fans and all other moving parts when starting, operating or repairing equipment.

1.e. In some cases it may be necessary to remove safety guards to perform required maintenance. Remove guards only when necessary and replace them when the maintenance requiring their removal is complete. Always use the greatest care when working near moving parts.

1.f. Do not put your hands near the engine fan. Do not attempt to override the governor or idler by pushing on the throttle control rods while the engine is running.

1.g. To prevent accidentally starting gasoline engines while turning the engine or welding generator during maintenance work, disconnect the spark plug wires, distributor cap or magneto wire as appropriate.

1.h. To avoid scalding, do not remove the radiator pressure cap when the engine is hot.

1.i. Using a generator indoors CAN KILL YOU IN MINUTES.

1.j. Generator exhaust contains carbon monoxide. This is a poison you cannot see or smell.

1.k. NEVER use inside a home or garage, EVEN IF doors and windows are open.

1.l. Only use OUTSIDE and far away from windows, doors and vents.

1.m. Avoid other generator hazards. READ MANUAL BEFORE USE.

ELECTRIC AND MAGNETIC FIELDS MAY BE DANGEROUS

2.a. Electric current flowing through any conductor causes localized Electric and Magnetic Fields (EMF). Welding current creates EMF fields around welding cables and welding machines

2.b. EMF fields may interfere with some pacemakers, and welders having a pacemaker should consult their physician before welding.

2.c. Exposure to EMF fields in welding may have other health effects which are now not known.

2.d. All welders should use the following procedures in order to minimize exposure to EMF fields from the welding circuit:

2.d.1. Route the electrode and work cables together - Secure them with tape when possible.

2.d.2. Never coil the electrode lead around your body.

2.d.3. Do not place your body between the electrode and work cables. If the electrode cable is on your right side, the work cable should also be on your right side.

2.d.4. Connect the work cable to the workpiece as close as possible to the area being welded.

2.d.5. Do not work next to welding power source.

ELECTRIC SHOCK CAN KILL.

3.a. The electrode and work (or ground) circuits are electrically "hot" when the welder is on. Do not touch these "hot" parts with your bare skin or wet clothing. Wear dry, hole-free gloves to insulate hands.

3.b. Insulate yourself from work and ground using dry insulation. Make certain the insulation is large enough to cover your full area of physical contact with work and ground.

In addition to the normal safety precautions, if welding must be performed under electrically hazardous conditions (in damp locations or while wearing wet clothing; on metal structures such as floors, gratings or scaffolds; when in cramped positions such as sitting, kneeling or lying, if there is a high risk of unavoidable or accidental contact with the workpiece or ground) use the following equipment:

- Semiautomatic DC Constant Voltage (Wire) Welder.
- DC Manual (Stick) Welder.
- AC Welder with Reduced Voltage Control.

3.c. In semiautomatic or automatic wire welding, the electrode, electrode reel, welding head, nozzle or semiautomatic welding gun are also electrically "hot".

3.d. Always be sure the work cable makes a good electrical connection with the metal being welded. The connection should be as close as possible to the area being welded.

3.e. Ground the work or metal to be welded to a good electrical (earth) ground.

3.f. Maintain the electrode holder, work clamp, welding cable and welding machine in good, safe operating condition. Replace damaged insulation.

3.g. Never dip the electrode in water for cooling.

3.h. Never simultaneously touch electrically "hot" parts of electrode holders connected to two welders because voltage between the two can be the total of the open circuit voltage of both welders.

3.i. When working above floor level, use a safety belt to protect yourself from a fall should you get a shock.

3.j. Also see Items 6.c. and 8.

ARC RAYS CAN BURN.

4.a. Use a shield with the proper filter and cover plates to protect your eyes from sparks and the rays of the arc when welding or observing open arc welding. Headshield and filter lens should conform to ANSI Z87. I standards.

4.b. Use suitable clothing made from durable flame-resistant material to protect your skin and that of your helpers from the arc rays.

4.c. Protect other nearby personnel with suitable, non-flammable screening and/or warn them not to watch the arc nor expose themselves to the arc rays or to hot spatter or metal.

FUMES AND GASES CAN BE DANGEROUS.

5.a. Welding may produce fumes and gases hazardous to health. Avoid breathing these fumes and gases. When welding, keep your head out of the fume. Use enough ventilation and/or exhaust at the arc to keep fumes and gases away from the breathing zone. **When welding hardfacing (see instructions on container or SDS) or on lead or cadmium plated steel and other metals or coatings which produce highly toxic fumes, keep exposure as low as possible and within applicable OSHA PEL and ACGIH TLV limits using local exhaust or mechanical ventilation unless exposure assessments indicate otherwise. In confined spaces or in some circumstances, outdoors, a respirator may also be required. Additional precautions are also required when welding on galvanized steel.**

5. b. The operation of welding fume control equipment is affected by various factors including proper use and positioning of the equipment, maintenance of the equipment and the specific welding procedure and application involved. Worker exposure level should be checked upon installation and periodically thereafter to be certain it is within applicable OSHA PEL and ACGIH TLV limits.

5.c. Do not weld in locations near chlorinated hydrocarbon vapors coming from degreasing, cleaning or spraying operations. The heat and rays of the arc can react with solvent vapors to form phosgene, a highly toxic gas, and other irritating products.

5.d. Shielding gases used for arc welding can displace air and cause injury or death. Always use enough ventilation, especially in confined areas, to insure breathing air is safe.

5.e. Read and understand the manufacturer's instructions for this equipment and the consumables to be used, including the Safety Data Sheet (SDS) and follow your employer's safety practices. SDS forms are available from your welding distributor or from the manufacturer.

5.f. Also see item 1.b.

WELDING AND CUTTING SPARKS CAN CAUSE FIRE OR EXPLOSION.

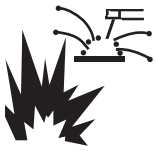

6.a. Remove fire hazards from the welding area. If this is not possible, cover them to prevent the welding sparks from starting a fire. Remember that welding sparks and hot materials from welding can easily go through small cracks and openings to adjacent areas. Avoid welding near hydraulic lines. Have a fire extinguisher readily available.

6.b. Where compressed gases are to be used at the job site, special precautions should be used to prevent hazardous situations. Refer to “Safety in Welding and Cutting” (ANSI Standard Z49.1) and the operating information for the equipment being used.

6.c. When not welding, make certain no part of the electrode circuit is touching the work or ground. Accidental contact can cause overheating and create a fire hazard.

6.d. Do not heat, cut or weld tanks, drums or containers until the proper steps have been taken to insure that such procedures will not cause flammable or toxic vapors from substances inside. They can cause an explosion even though they have been “cleaned”. For information, purchase “Recommended Safe Practices for the Preparation for Welding and Cutting of Containers and Piping That Have Held Hazardous Substances”, AWS F4.1 from the American Welding Society (see address above).

6.e. Vent hollow castings or containers before heating, cutting or welding. They may explode.

6.f. Sparks and spatter are thrown from the welding arc. Wear oil free protective garments such as leather gloves, heavy shirt, cuffless trousers, high shoes and a cap over your hair. Wear ear plugs when welding out of position or in confined places. Always wear safety glasses with side shields when in a welding area.

6.g. Connect the work cable to the work as close to the welding area as practical. Work cables connected to the building framework or other locations away from the welding area increase the possibility of the welding current passing through lifting chains, crane cables or other alternate circuits. This can create fire hazards or overheat lifting chains or cables until they fail.

6.h. Also see item 1.c.

6.I. Read and follow NFPA 51B “Standard for Fire Prevention During Welding, Cutting and Other Hot Work”, available from NFPA, 1 Batterymarch Park, PO box 9101, Quincy, MA 022690-9101.

6.j. Do not use a welding power source for pipe thawing.

CYLINDER MAY EXPLODE IF DAMAGED.

7.a. Use only compressed gas cylinders containing the correct shielding gas for the process used and properly operating regulators designed for the gas and pressure used. All hoses, fittings, etc. should be suitable for the application and maintained in good condition.

7.b. Always keep cylinders in an upright position securely chained to an undercarriage or fixed support.

7.c. Cylinders should be located:

- Away from areas where they may be struck or subjected to physical damage.
- A safe distance from arc welding or cutting operations and any other source of heat, sparks, or flame.

7.d. Never allow the electrode, electrode holder or any other electrically “hot” parts to touch a cylinder.

7.e. Keep your head and face away from the cylinder valve outlet when opening the cylinder valve.

7.f. Valve protection caps should always be in place and hand tight except when the cylinder is in use or connected for use.

7.g. Read and follow the instructions on compressed gas cylinders, associated equipment, and CGA publication P-I, “Precautions for Safe Handling of Compressed Gases in Cylinders,” available from the Compressed Gas Association, 14501 George Carter Way Chantilly, VA 20151.

FOR ELECTRICALLY POWERED EQUIPMENT.

8.a. Turn off input power using the disconnect switch at the fuse box before working on the equipment.

8.b. Install equipment in accordance with the U.S. National Electrical Code, all local codes and the manufacturer’s recommendations.

8.c. Ground the equipment in accordance with the U.S. National Electrical Code and the manufacturer’s recommendations.

Refer to http://www.lincolnelectric.com/safety for additional safety information.

Electromagnetic Compatibility (EMC)

Conformance
Products displaying the CE mark are in conformity with European Community Council Directive of 15 Dec 2004 on the approximation of the laws of the Member States relating to electromagnetic compatibility, 2004/108/EC. It was manufactured in conformity with a national standard that implements a harmonized standard: EN 60974-10 Electromagnetic Compatibility (EMC) Product Standard for Arc Welding Equipment. It is for use with other Lincoln Electric equipment. It is designed for industrial and professional use.

Introduction
All electrical equipment generates small amounts of electromagnetic emission. Electrical emission may be transmitted through power lines or radiated through space, similar to a radio transmitter. When emissions are received by other equipment, electrical interference may result. Electrical emissions may affect many kinds of electrical equipment; other nearby welding equipment, radio and TV reception, numerical controlled machines, telephone systems, computers, etc. Be aware that interference may result and extra precautions may be required when a welding power source is used in a domestic establishment.

Installation and Use
The user is responsible for installing and using the welding equipment according to the manufacturer's instructions. If electromagnetic disturbances are detected then it shall be the responsibility of the user of the welding equipment to resolve the situation with the technical assistance of the manufacturer. In some cases this remedial action may be as simple as earthing (grounding) the welding circuit, see Note. In other cases it could involve construction of an electromagnetic screen enclosing the power source and the work complete with associated input filters. In all cases electromagnetic disturbances must be reduced to the point where they are no longer troublesome.

Note: The welding circuit may or may not be earthed for safety reasons according to national codes. Changing the earthing arrangements should only be authorized by a person who is competent to access whether the changes will increase the risk of injury, e.g., by allowing parallel welding current return paths which may damage the earth circuits of other equipment.

Assessment of Area
Before installing welding equipment the user shall make an assessment of potential electromagnetic problems in the surrounding area. The following shall be taken into account:

a) other supply cables, control cables, signaling and telephone cables; above, below and adjacent to the welding equipment;

b) radio and television transmitters and receivers;

c) computer and other control equipment;

d) safety critical equipment, e.g., guarding of industrial equipment;

e) the health of the people around, e.g., the use of pacemakers and hearing aids;

f) equipment used for calibration or measurement

g) the immunity of other equipment in the environment. The user shall ensure that other equipment being used in the environment is compatible. This may require additional protection measures;

h) the time of day that welding or other activities are to be carried out.

Electromagnetic Compatibility (EMC)

The size of the surrounding area to be considered will depend on the structure of the building and other activities that are taking place. The surrounding area may extend beyond the boundaries of the premises.

Methods of Reducing Emissions

Mains Supply
Welding equipment should be connected to the mains supply according to the manufacturer's recommendations. If interference occurs, it may be necessary to take additional precautions such as filtering of the mains supply. Consideration should be given to shielding the supply cable of permanently installed welding equipment, in metallic conduit or equivalent. Shielding should be electrically continuous throughout its length. The shielding should be connected to the welding power source so that good electrical contact is maintained between the conduit and the welding power source enclosure.

Maintenance of the Welding Equipment
The welding equipment should be routinely maintained according to the manufacturer's recommendations. All access and service doors and covers should be closed and properly fastened when the welding equipment is in operation. The welding equipment should not be modified in any way except for those changes and adjustments covered in the manufacturers instructions. In particular, the spark gaps of arc striking and stabilizing devices should be adjusted and maintained according to the manufacturer's recommendations.

Welding Cables
The welding cables should be kept as short as possible and should be positioned close together, running at or close to floor level.

Equipotential Bonding
Bonding of all metallic components in the welding installation and adjacent to it should be considered. However, metallic components bonded to the work piece will increase the risk that the operator could receive a shock by touching these metallic components and the electrode at the same time. The operator should be insulated from all such bonded metallic components.

Earthing of the Workpiece
Where the workpiece is not bonded to earth for electrical safety, not connected to earth because of its size and position, e.g., ships hull or building steelwork, a connection bonding the workpiece to earth may reduce emissions in some, but not all instances. Care should be taken to prevent the earthing of the workpiece increasing the risk of injury to users, or damage to other electrical equipment. Where necessary, the connection of the workpiece to earth should be made by a direct connection to the workpiece, but in some countries where direct connection is not permitted, the bonding should be achieved by suitable capacitance, selected according to national regulations.

Screening and Shielding
Selective screening and shielding of other cables and equipment in the surrounding area may alleviate problems of interference. Screening of the entire welding installation may be considered for special applications[1].

---

[1] Portions of the preceding text are contained in EN 60974-10: "Electromagnetic Compatibility (EMC) product standard for arc welding equipment."

INSTALLATION ..... SECTION A
TECHNICAL SPECIFICATIONS A-1
VRD (VOLTAGE REDUCTION DEVICE) A-2
LOCATION AND VENTILATION A-3
STORING A-3
STACKING A-3
ANGLE OF OPERATION A-3
LIFTING A-3
HIGH ALTITUDE OPERATION A-4
HIGH TEMPERATURE OPERATION A-4
TOWING A-4
VEHICLE MOUNTING A-4
PRE-OPERATION ENGINE SERVICE A-4
OIL A-4
FUEL - USE DIESEL FUEL ONLY A-5
ENGINE COOLANT A-5
BATTERY CONNECTION A-5
MUFFLER OUTLET PIPE A-5
SPARK ARRESTOR A-5
CASE FRONT CONTROLS A-6
WELDING TERMINALS A-8
WELDING OUTPUT CABLES A-8
MACHINE GROUNDING A-8
REMOTE CONTROL A-9
AUXILIARY POWER RECEPTACLES A-9
STANDBY POWER CONNECTIONS A-9
CONNECTION OF WIRE FEEDERS WITH CONTROL CABLE (14 PIN) A-10
CONNECTION OF ACROSS THE ARC WIRE FEEDERS TO THE DUAL MAVERICK® 450 ..... A-11

OPERATION ..... SECTION B
GENERAL DESCRIPTION B-1
FOR AUXILIARY POWER: B-1
ENGINE OPERATION B-1
ADD FUEL B-2
HAND PRIMER BUTTON B-2
BREAK-IN PERIOD B-2
RECOMMENDED APPLICATIONS B-2
GENERATOR B-2
ENGINE OPERATION B-3
TYPICAL FUEL CONSUMPTION B-3
WELDER OPERATION B-4
PARALLELING B-6
AUXILIARY POWER OPERATION B-7
DISPLAY OPERATION B-8

ACCESSORIES ..... SECTION C

MAINTENANCE ..... SECTION D
ROUTINE AND PERIODIC MAINTENANCE D-1
ENGINE MAINTENANCE D-1
AIR FILTER D-1
FUEL FILTERS D-3
COOLING SYSTEM D-3
NAMEPLATES / WARNING DECALS MAINTENANCE D-3
WELDER / GENERATOR MAINTENANCE D-3
FAN BELT CHANGE D-3
OIL CHANGE D-3
BATTERY HANDLING D-4
PREVENTING ELECTRICAL DAMAGE D-4
PREVENTING BATTERY DISCHARGE D-4
PREVENTING BATTERY BUCKLING D-4
CHARGING THE BATTERY D-4

TROUBLESHOOTING ..... **SECTION E**

DIAGRAMS ..... **SECTION G**

PARTS LIST ..... **PARTS.LINCOLNELECTRIC.COM**

CONTENT/DETAILS MAY BE CHANGED OR UPDATED WITHOUT NOTICE. FOR MOST CURRENT INSTRUCTION MANUALS, GO TO PARTS.LINCOLNELECTRIC.COM.

INSTALLATION

TECHNICAL SPECIFICATIONS -
DUAL MAVERICK® 450 (K4381-1) CODE 12723

INPUT - DIESEL ENGINE					
Make/Model	**Description**	**Speed (RPM)**	**Displacement cu. in. (ltrs.)**	**Starting System**	**Dry Capacities**
Perkins® 403D-11	3 cylinder 26.4 HP (19.7kw) 3000 RPM Diesel Engine	High Idle 3000 Full Load 3000 Low Idle 2100	69 (1.1) Bore x Stroke inch (mm) 3.03 X 3.19 (71 x 81mm)	12VDC Battery & starter	Fuel: 20 gal. (75.6 L) Oil: 1.16 gal. (4.4L) Radiator Coolant: 5.0gal. (18.9L)

RATED OUTPUT @ 104°F(40°C) - WELDER					
SINGLE MODE			**DUAL MODE**		
Duty Cycle	**Welding Output**	**Volts at Rated Amps**	**Duty Cycle**	**Welding Output**	**Volts at Rated Amps**
100% 100%	350 A 450 A	34 Volts 26 volts	100% 100%	225 A 210 A	26 Volts 28.4 Volts

OUTPUT @ 104°F (40°C) – WELDER AND GENERATOR	
SINGLE MODE	**DUAL MODE**
Welding Range 50-450 Amps CC 30-370 Amps CV 20 - 255 Amps TIG	**Welding Range** 30 – 225 Amps CC 30 – 230 Amps CV 20 - 255 Amps TIG
Open Circuit Voltage 60 MAX OCV @ 3000 RPM	**Open Circuit Voltage** 60 MAX OCV @ 3000 RPM
Auxiliary Power 220 VAC (2) x 6600 Watts, 50 Hz, Single Phase 380 VAC x 13000 Watts, 50 Hz, Three Phase	**Auxiliary Power** 220 VAC (2) x 6600 Watts, 50 Hz, Single Phase 380 VAC x 13000 Watts, 50 Hz, Three Phase

PHYSICAL DIMENSIONS			
Height (2)	**Width** (3)	**Depth**	**Weight**
36.1 in (917 mm)	27.0 in. (686 mm)	65.0 in. (1651 mm)	1155 lbs. (524 kg) (Approx.)

Lift Bail weight rating 2130 lbs. (966 kg.) Maximum.

(1) Output rating in watts is equivalent to volt-amperes at unity power factor.
Output voltage is within +/- 10% at all loads up to rated capacity. When welding, available auxiliary power will be reduced.
(2) Top of Enclosure, add 8.3” (211mm) for exhaust pipe, also add 3.65”(93mm) for metal skid.
(3) Without metal skid.

SAFETY PRECAUTIONS

Only qualified personnel should install, use, or service this equipment.

⚠ WARNING

Do not attempt to use this equipment until you have thoroughly read the engine manufacturer's manual supplied with your welder. It includes important safety precautions, detailed engine starting, operating and maintenance instructions, and parts lists.

ELECTRIC SHOCK can kill.

- **Do not touch electrically live parts or electrode with skin or wet clothing.**
- **Insulate yourself from work and ground**
- **Always wear dry insulating gloves.**

ENGINE EXHAUST can kill.

- **Use in open, well ventilated areas or vent exhaust outside.**

MOVING PARTS can injure.

- **Do not operate with doors open or guards off.**
- **Stop engine before servicing.**
- **Keep away from moving parts.**

See additional warning information at front of this operator's manual.

VRD (VOLTAGE REDUCTION DEVICE)

The VRD feature provides additional safety in the Stick, Pipe, Tig and Gouge modes especially in an environment with a higher risk of electric shock such as wet areas and hot humid sweaty conditions.

The VRD reduces the OCV (Open Circuit Voltage) at the welding output terminals while not welding to less than 13V DC when the resistance of the output circuit is above 200Ω (ohms).

The VRD requires that the welding cable connections be kept in good electrical condition because poor connections will contribute to poor starting. Having good electrical connections also limits the possibility of other safety issues such as heat-generated damage, burns and fires.

The machine is shipped with the VRD switch in the "OFF" position. To turn it "ON" or "OFF":

1. Switch the High Idle/Run - Stop switch to the Stop position.
2. Remove the 8 screws on the upper panel (Fig A.1). Pull out the panel to have access to the PC control boards (Fig A.1).

FIGURE A.1

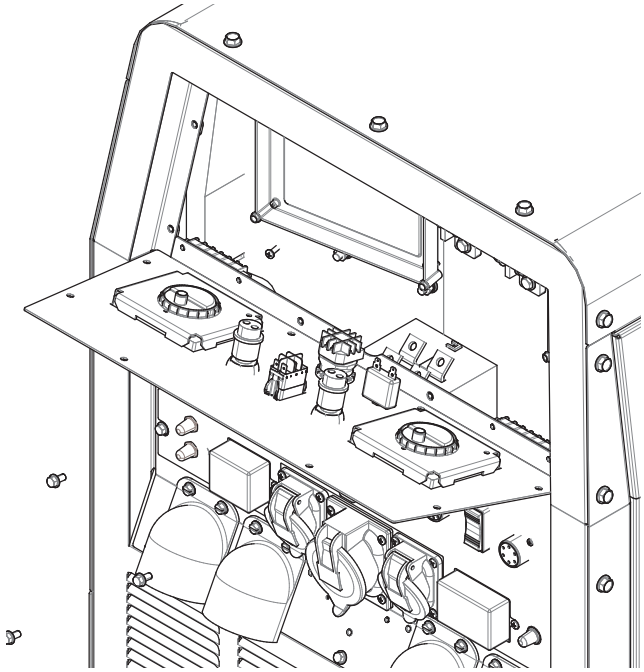

3. Locate VRD switches (as marked in Fig A.2) on both PC control boards. Left position on each switch indicates "OFF" state; right position on each switch indicates "ON" state. PC Control Board on the left is for settings for the left user. PC Control board on the right is for settings for the right user.

FIGURE A.2

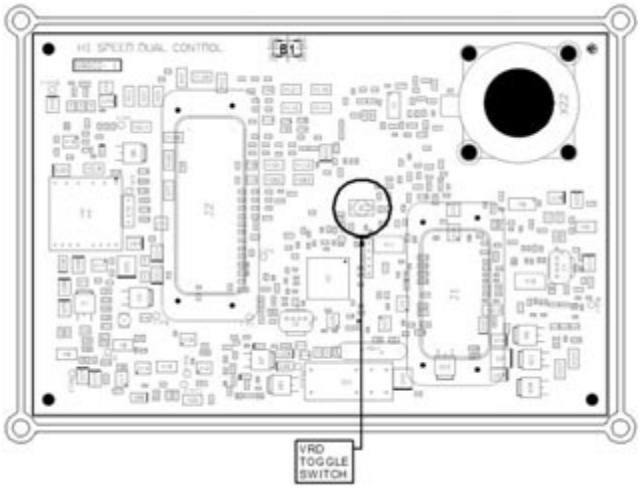

4. Set VRD switches as desired. Toggle left for "OFF". Toggle right for "ON"
5. Reinstall the upper panel with screws from Step 2. Turn on the High Idle/Run switch. Confirm VRD status on the LCD screen display related to that PC board.

When the VRD switch is in the "ON" position. The display will show a green tab with "VOLTS<30". If the VRD switch is in the "ON" position and stud voltage is above 30 volts or while welding, the display will show a red tab with "VOLTS>30".

LOCATION AND VENTILATION

The welder should be located to provide an unrestricted flow of clean, cool air to the cooling air inlets and to avoid restricting the cooling air outlets. Locate the welder so that the engine exhaust fumes are properly vented to an outside area.

⚠ CAUTION

DO NOT MOUNT OVER COMBUSTIBLE SURFACES

Where there is a combustible surface directly under stationary or fixed electrical equipment, that surface should be covered with a steel plate at least .06”(1.6mm) thick, which should extend not less than 5.90”(150mm) beyond the equipment on all sides.

STORING

1. Store the machine in a cool, dry place when it is not in use. Protect it from dust and dirt. Keep it where it can’t be accidentally damaged from construction activities, moving vehicles, and other hazards.
2. Drain the engine oil and refill with fresh 10W30 oil. Run the engine for about five minutes to circulate oil to all the parts. See the MAINTENANCE section of this manual for details on changing oil.
3. Remove the battery, recharge it, and adjust the electrolyte level. Store the battery in a dry, dark place.

STACKING

Dual Maverick® 450 machines cannot be stacked.

ANGLE OF OPERATION

To achieve optimum engine performance the Dual Maverick® 450 should be run in a level position.

The maximum angle of operation for the machine is 35 degrees continuous in all directions.

When operating the welder at an angle, provisions must be made for checking and maintaining the oil level at the normal (FULL) oil capacity. The effective fuel capacity will be slightly less than the specified 20 gal.(75.7 ltrs.).

LIFTING

The Dual Maverick® 450 weighs approximately 1294 lbs.(587 kg) with a full tank of fuel, 1155 lbs.(524kg) without fuel. A lift bail and fork pockets are installed on the machine. Lift welder ONLY using the lift bail or fork pockets.

⚠ WARNING

FALLING EQUIPMENT can cause injury.

- **Lift only with equipment of adequate lifting capacity.**
- **Be sure machine is stable when lifting.**
- **Do not lift this machine using lift bail if it is equipped with a heavy accessory such as trailer or gas cylinder.**
- **Do not lift machine if lift bail is damaged.**
- **Do not operate machine while suspended from lift bail.**
- **DO NOT EXCEED MAXIMUM LIFT BAIL WEIGHT RATING.**

(SEE TECHNICAL SPECIFICATIONS PAGE)

HIGH ALTITUDE OPERATION

The naturally aspirated engine will run correctly up to an attitude of 600 m (2000 ft.) If the engine is to operate at an attitude above this, an increase in smoke may be seen. This is normal for a naturally aspirated engine.

HIGH TEMPERATURE OPERATION

At temperatures above 40°C (104°F), output voltage derating may be necessary. For maximum output current ratings, follow the table below.

DESERT DUTY RATINGS

AMPS	450	450	425	400
VOLTS	26	26	26	26
DUTY CYCLE	100%	90%	60%	60%
AMBIENT TEMP	40	45	50	55

TOWING

The recommended trailer for use with this equipment for road, in-plant and yard towing by a vehicle (1) is Lincoln's K2636-1. If the user adapts a non-Lincoln trailer, he must assume responsibility that the method of attachment and usage does not result in a safety hazard nor damage the welding equipment. Some of the factors to be considered are as follows:

1. Design capacity of trailer vs. weight of Lincoln equipment and likely additional attachments.
2. Proper support of, and attachment to, the base of the welding equipment so that there will be no undue stress to the trailer's framework.
3. Proper placement of the equipment on the trailer to insure stability side to side and front to back when being moved and when standing by itself.
4. Typical conditions of use, such as travel speed, roughness of surface on which the trailer will be operated, and environmental conditions.
5. Proper preventative maintenance of trailer.
6. Conformance with federal, state and local laws(1).

(1) Consult applicable federal, state and local laws regarding specific requirements for use on public highways.

VEHICLE MOUNTING

⚠ WARNING

Improperly mounted concentrated loads may cause unstable vehicle handling and tires or other components to fail.

- **Only transport this Equipment on serviceable vehicles which are rated and designed for such loads.**
- **Distribute, balance and secure loads so vehicle is stable under conditions of use.**
- **Do not exceed maximum rated loads for components such as suspension, axles and tires.**
- **Mount equipment base to metal bed or frame of vehicle.**
- **Follow vehicle manufacture's instructions.**

PRE-OPERATION ENGINE SERVICE

READ the engine operating and maintenance instructions supplied with this machine.

⚠ WARNING

- **Keep hands away from the engine muffler or HOT engine parts.**
- **Stop engine and allow to cool before fuelling.**
- **Do not smoke when fuelling.**
- **Fill fuel tank at a moderate rate and do not over-fill.**
- **Wipe up spilled fuel and allow fumes to clear before starting engine.**
- **Keep sparks and flame away from tank.**

OIL

The Dual Maverick® 450 is shipped with the engine crankcase filled with high quality SAE 10W-30 oil (API class CD or better). Check the engine oil levels before starting the engine. If it is not up to the full mark on the dip stick, add oil as required. Check the oil level every four hours of running time during the first 35 running hours. Refer to the engine Operator's Manuals for specific oil recommendations and break-in information. The oil change interval is dependent on the quality of the oil and the operating environment. Refer to the engine Operator's Manuals for the proper service and maintenance intervals.

FUEL - USE DIESEL FUEL ONLY

Fill the fuel tank with clean, fresh diesel fuel. The capacity of the fuel tank is approximately 20 gallons (75.7 liters). See engine Operator's Manual for specific fuel recommendations. Running out of fuel may require bleeding the fuel injection pump.

NOTE: Before starting the engine, open the fuel shutoff valve on the fuel filter located on the liftbale.

ENGINE COOLANT

⚠ WARNING

HOT COOLANT can burn skin.

Do not remove cap if radiator is hot.

The welder is shipped with the engine and radiator filled with a 50% mixture of ethylene glycol and water. See the MAINTENANCE section and the engine Operator's Manual for more information on coolant.

BATTERY CONNECTION

⚠ WARNING

GASES FROM BATTERY can explode.

Keep sparks, flame and cigarettes away from battery.

To prevent EXPLOSION when:

- **INSTALLING A NEW BATTERY — disconnect negative cable from old battery first and connect to new battery last.**
- **CONNECTING A BATTERY CHARGER — remove battery from welder by disconnecting negative cable first, then positive cable and battery clamp. When reinstalling, connect negative cable last. Keep well ventilated.**
- **USING A BOOSTER — connect positive lead to battery first then connect negative lead to negative battery lead at engine foot.**

BATTERY ACID can burn eyes and skin.

- **Wear gloves and eye protection and be careful when working near battery.**
- **Follow instructions printed on battery.**

IMPORTANT: To prevent ELECTRICAL DAMAGE WHEN:

a) Installing new battery.

b) Using a booster.

Use correct polarity — **NEGATIVE GROUND.**

The Dual Maverick® 450 is shipped with the negative battery cable disconnected. Before you operate the machine, make sure the High Idle / Run - Stop switch is in the STOP position and attach the disconnected cable securely to the negative (-) battery terminal.

Remove the insulating cap from the negative battery terminal. Replace and tighten negative battery cable terminal. NOTE: This machine is furnished with a wet charged battery; if unused for several months, the battery may require a booster charge. Be sure to use the correct polarity when charging the battery.

MUFFLER OUTLET PIPE

Remove the plastic plug covering the muffler outlet tube. Using the clamp provided secure the outlet pipe to the outlet tube with the pipe positioned such that it will direct the exhaust in the desired position.

SPARK ARRESTOR

Some federal, state or local laws may require that petrol or diesel engines be equipped with exhaust spark arrestors when they are operated in certain locations where unarrested sparks may present a fire hazard. When required by local regulations, a suitable spark arrestor, must be installed and properly maintained.

⚠ CAUTION

An incorrect arrestor may lead to damage to the engine or adversely affect performance.

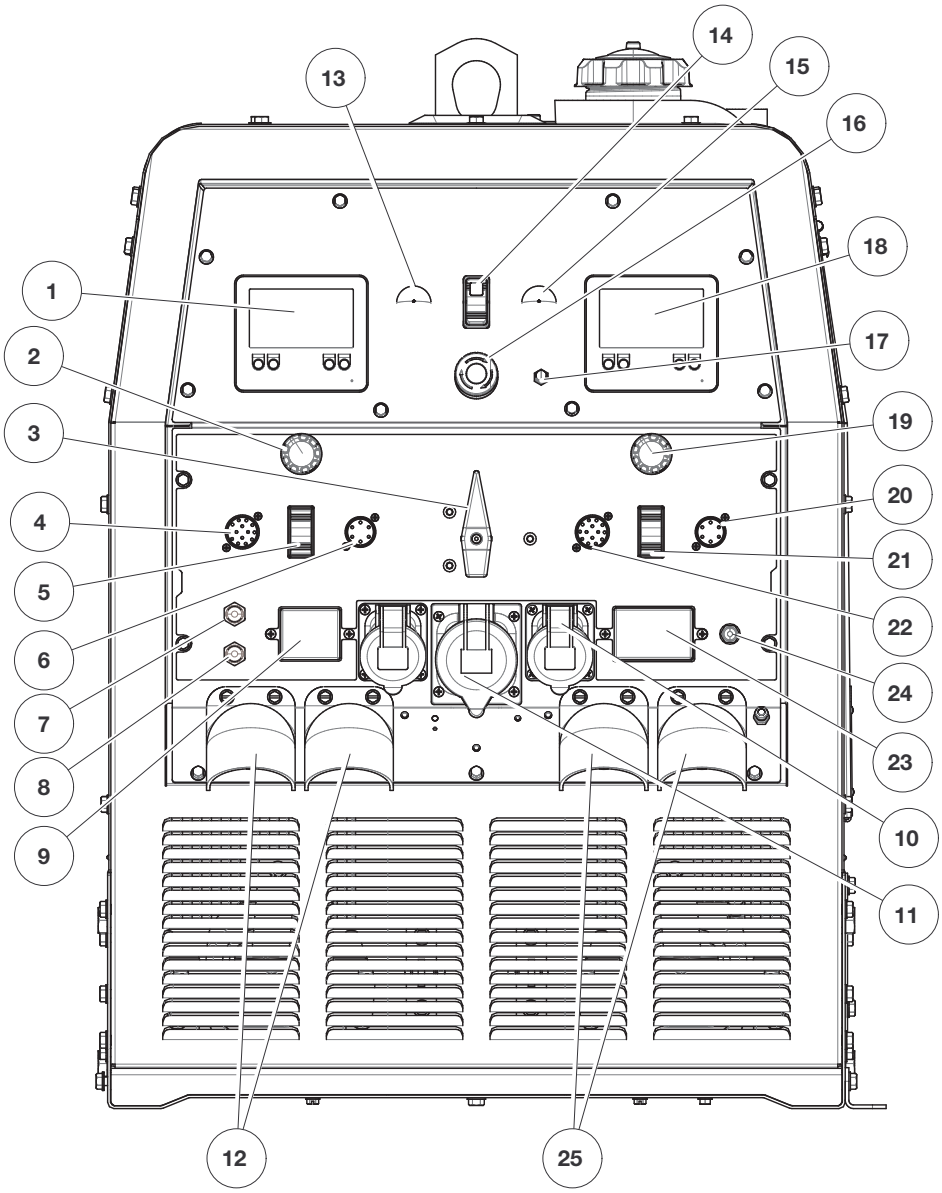

CASE FRONT CONTROLS

1. **LCD SCREEN, IP67 RATED OPERATOR A -** The LCD screen displays information about welding mode, output voltage or current, engine status and machine settings. It allows operator to select welding mode and read the output voltage or current when presetting using the output control knob. During welding, the screen displays the actual output voltage (VOLTS) and current (AMPS). A memory feature holds the screens on for 5 seconds after welding is stopped. This allows the operator to read the actual current and voltage just prior to when welding was ceased. In engine status section, information about engine hours, filter condition, engine oil and other service items are displayed..

2. **OUTPUT CONTROL OPERATOR A -** The OUTPUT KNOB is used to preset the output voltage or current as displayed on the LCD screen for the six welding modes. When in the ARC GOUGING or CV-WIRE modes and when a remote control is connected to the 6-Pin or 14-Pin Connector, the auto-sensing circuit automatically switches the OUTPUT CONTROL from control at the welder to the remote control. When in DOWNHILL PIPE and CC-STICK modes if a remote control is connected to the 6-Pin or 14 Pin Connectors, the output is controlled by the remote and the output control on the machine is used to set the maximum current range for the remote.

3. **SINGLE/DUAL OPERATOR MODE SWITCH -** The switch allows the user to choose between Single Operator and Dual Operator weld modes. Single Operator mode is when the switch is in the “Left” position. Dual Operator mode is when the switch is in the “Right” position.

4. **14-PIN WIRE FEEDER CONNECTION OPERATOR A -** For attaching wire feeder control cables. Includes contactor closure circuit, auto-sensing remote control circuit, and 42V power. The remote control circuit operates the same as the 6 Pin Amphenol. NOTE: That 115V is not available.

5. **WIRE FEEDER POLARITY SWITCH -** Matches the polarity of the wire feeder voltmeter to the polarity of the electrode.

6. **6-PIN REMOTE CONTROL CONNECTOR OPERATOR A** - For attaching optional remote control equipment. Includes auto-sensing remote control circuit.

7. **15 AMP CIRCUIT BREAKER -** Auxiliary output breaker protects the 220V, single phase receptacle.
8. **15 AMP CIRCUIT BREAKER -** Auxiliary output breaker protects the 220V, single phase receptacle.
9. **25 AMP CIRCUIT BREAKER -** Auxiliary output breaker protects the 380V, three phase receptacle.
10. **220VAC SINGLE PHASE AC EURO PLUGS (QTY 2) -** European (IEC-309) receptacle rated up to 16 amps and is IP44 rated.
11. **380V THREE PHASE AC EURO PLUG-** European (IEC-309) receptacle rated up to 32 amps and is IP44 rated.
12. **POSITIVE AND NEGATIVE WELD TERMINAL OPERATOR A -** Provides a connection point for the electrode and work cables.
13. **GLOW PLUG PUSH BUTTON -** When pushed activates the glow plugs. Glow plug should not be activated for more than 20 seconds continuously.
14. **RUN / STOP SWITCH -** RUN position energizes the engine prior to starting. STOP position stops the engine. The oil pressure interlock switch prevents battery drain if the switch is left in the RUN position and the engine is not operating.
15. **START PUSH BUTTON-** Energizes the starter motor to crank the engine.
16. **EMERGENCY STOP –** Push to stop the engine immediately. The stop button needs to be manually reset after use in order to turn on the engine again.
17. **BATTERY BREAKER -** For protection of Battery Charging Circuit.
18. **LCD SCREEN, IP67 RATED OPERATOR B**
19. **OUTPUT CONTROL OPERATOR B**
20. **6-PIN REMOTE CONTROL CONNECTION OPERATOR B**
21. **WIRE FEEDER POLARITY SWITCH OPERATOR B**
22. **14-PIN WIRE FEEDER CONNECTION OPERATOR B**
23. **RESIDUAL CURRENT DEVICE** – 30mA- Instantly breaks the auxiliary circuit to prevent serious harm from an ongoing electric shock.
24. **WIRE FEEDER CIRCUIT BREAKER-** 42V WIRE FEEDER BREAKERS
25. **POSITIVE AND NEGATIVE WELD TERMINAL OPERATOR B**

WELDING TERMINALS

From the main screen select MIG / FCAW / TIG welding. Press knob to select screen that shows Weld Output Override. (Figure A.3)

Press knob to select either OFF - output controlled by welding gun switch or ON - output always ON (electrode always hot).

FIGURE A.3

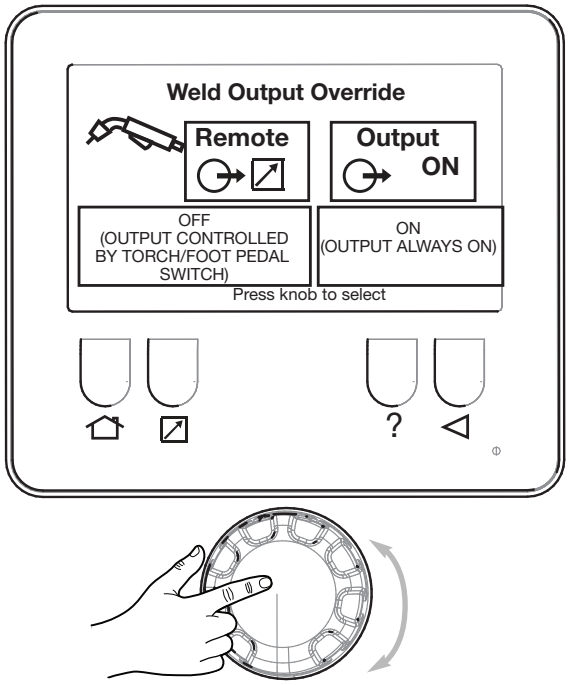

WELDING OUTPUT CABLES

With the engine off, connect the electrode and work cables to the terminals provided. These connections should be checked periodically and tightened if necessary.

Listed in Table A.1 are copper cable sizes recommended for the rated current and duty cycle. Lengths stipulated are the distance from the welder to work and back to the welder again. Cable sizes are increased for greater lengths primarily for the purpose of minimizing cable voltage drop.

TABLE A.1 TOTAL COMBINED LENGTH OF ELECTRODE AND WORK CABLES

Cable Length	Cable Size for 400 Amps 60% Duty Cycle	Cable Size for 300 AMPS 60% Duty Cycle
Lengths up to 100 ft. (30m)	2/0 AWG	1/0 AWG
100 ft. (30m) to 150 ft. (61m)	2/0 AWG	1/0 AWG
150 ft. (46m) to 200 ft. (61m)	3/0 AWG	2/0

MACHINE GROUNDING

Because this portable engine driven welder creates its own power, it is not necessary to connect its frame to an earth ground, unless the machine is connected to premises wiring (home, shop, etc.).

⚠ WARNING

To prevent dangerous electric shock, other equipment to which this engine driven welder supplies power must:

- **Be grounded to the frame of the welder using a grounded type plug or be double insulated.**
- **Do not ground the machine to a pipe that carries explosive or combustible material.**

When this welder is mounted on a truck or trailer, its frame must be securely connected to the metal frame of the vehicle. When this engine driven welder is connected to premises wiring such as that in a home or shop, its frame must be connected to the system earth ground. See further connection instructions in the section entitled “Standby Power Connections” as well as the article on grounding in the latest National Electrical Code and the local codes.

In general, if the machine is to be grounded, it should be connected with a #8 or larger copper wire to a solid earth ground such as a metal ground stake going into the ground for at least 10 Feet or to the metal framework of a building which has been effectively grounded.

The National Electric Code lists a number of alternate means of grounding electrical equipment. A machine grounding stud marked with the symbol ⏚ is provided on the front of the welder.

REMOTE CONTROL

The Dual Maverick® 450 is equipped with a 6-pin and a 14-pin connector. The 6-pin connector is for connecting the K857 or K857-1 Remote Control or for TIG welding, the K870 foot Amptrol or the K963-3 hand Amptrol. When in the CC-STICK, ARC GOUGING, TIG or CV-WIRE modes and when a remote control is connected to the 6-pin Connector, the auto-sensing circuit automatically switches the OUTPUT control from control at the welder to remote control.

The 14-pin connector is used to directly connect a wire feeder control cable. In the CV-WIRE mode, when the control cable is connected to the 14-pin connector, the auto-sensing circuit automatically makes the Output Control inactive and the wire feeder voltage control active.

In each case, once connected control maybe optionally changed back to the control panel using the display remote button. The maximum and minimum current range can be setup / modified in display.

⚠ WARNING

NOTE: When a wire feeder with a built in welding voltage control is connected to the 14-pin connector, do not connect anything to the 6-pin connector.

AUXILIARY POWER RECEPTACLES

For heavy loads switch the "HIGH IDLE/RUN-STOP" control switch to the "High Idle" mode and set weld output at max.

The auxiliary power of the Dual Maverick® 450 consists of two 220 VAC European (IEC-309) 15 Amp receptacles protected by two 15 Amp circuit breakers.

One 380 VAC European (IEC-309) 21 Amp receptacle that is protected by a 25 Amp 3 Pole circuit breaker.

The auxiliary power capacity is 6,600 Watts Continuous of 50 Hz, single phase power and 13,000 Watts continuous of 50 Hz, three phase power.

STANDBY POWER CONNECTIONS

The Dual Maverick® 450 is suitable for temporary, standby or emergency power using the engine manufacturer's recommended maintenance schedule.

The Dual Maverick® 450 can be permanently installed as a standby power unit for 380 VAC, three phase, 21 amp service.

Connections must be made by a licensed electrician who can determine how the power can be adapted to the particular installation and comply with all applicable electrical codes.

Take necessary steps to assure load is limited to the capacity of the Dual Maverick® 450.

CABLE INDUCTANCE AND ITS EFFECTS ON WELDING

Excessive cable inductance will cause the welding performance to degrade. There are several factors that contribute to the overall inductance of the cabling system including cable size, length, and number of loops. To reduce cable inductance do not loop welding cables see figure A.4, especially consistently in one direction. If there are loops separate them as much as possible and make the loop as large as possible. A straight or zig-zag pattern between the machine and work is recommended see figure A.4.

If a spooling mechanism is used to store the welding cables, unspool the cables. Avoid leaving more than 30 feet of cable on each storage spool. For best performance completely unspool the welding cables.

For optimal performance when welding with two operators maintain some distance between the left and right sets of welding cables and use individual work piece cables.

FIGURE A.4

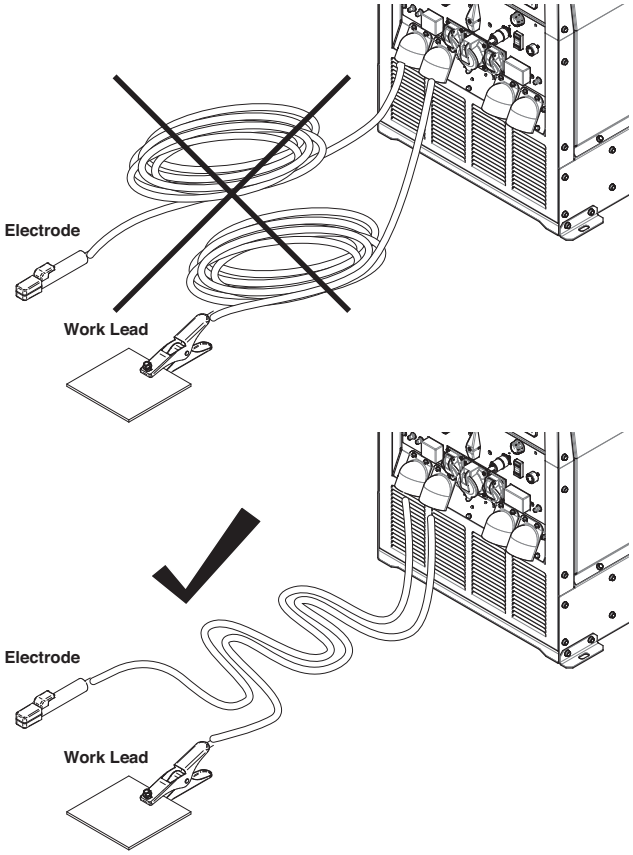

CONNECTION OF WIRE FEEDERS WITH CONTROL CABLE (14 PIN)

⚠ WARNING

Shut off welder before making any electrical connections.

CONNECTION OF LF-72, LF-74, FLEX FEED 74 HT, FLEX FEED 84, LN-25 PRO DUAL POWER TO THE DUAL MAVERICK® 450

Note: The Dual Maverick 450 can operate two different wire feeders at the same time.

- Shut the welder off.
- Set the “WIRE FEEDER VOLTMETER” switch to either “+” or “-” as required by the electrode being used.
- For electrode Positive, connect the electrode cable to the "+" terminal of the welder and work cable to the "-" terminal of the welder. For electrode Negative, connect the electrode cable "-" terminal of the welder and work cable to the "+" terminal of the welder.
- Using the display Set "MODE" to MIG/FCAW.
- Adjust the “PINCH” setting to desired Crispness. SOFT for MIG and CRISP for Innershield.
- Set the "Weld Output Override" to the desired settings using the display.
- Connect the 14 pin control cable from the wire feeder to the engine drive (See Figure A.5).
- This procedure can be done for both “Single” and “Dual” operator modes.

FIGURE A.5

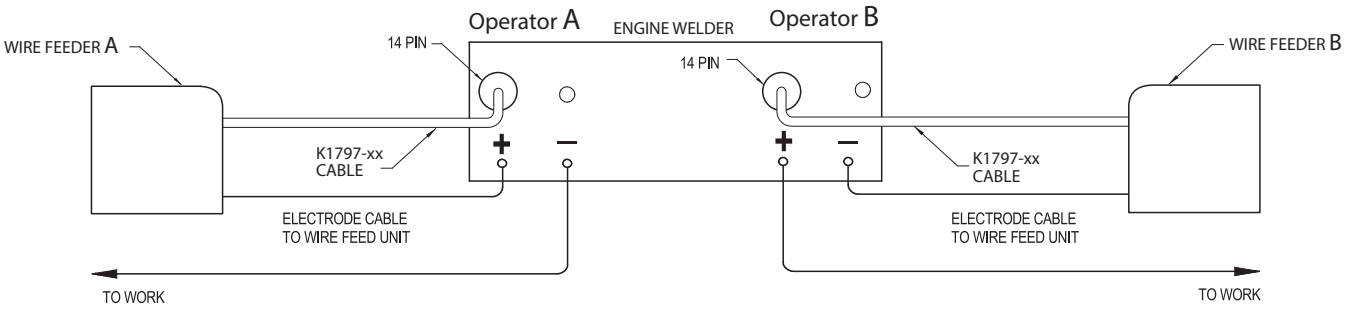

CONNECTION OF ACROSS THE ARC WIRE FEEDERS TO THE DUAL MAVERICK® 450

These connections instructions apply to both the LN-25 Pro and Activ8 models. The feeders have an internal contactor and the electrode is not energized until the gun trigger is closed. When the gun trigger is closed the wire will begin to feed and the welding process is started.

- Shut the welder off.
- For electrode Positive, connect the electrode cable to the "+" terminal of the welder and work cable to the "-" terminal of the welder. For electrode Negative, connect the electrode cable "-" terminal of the welder and work cable to the "+" terminal of the welder.
- Attach the single lead from the front of the feeder to work using the spring clip at the end of the lead. This is a control lead to supply current to the wire feeder motor; it does not carry welding current (See Figure A.6).
- Using the display Set "MODE" to MIG/FCAW
- Set the "Weld Output Override" to "ON" setting using the display.
- Set the "PINCH" setting to "0" initially and adjust to suit.

NOTE: The LN-25 (K431) Remote Control Module and (K432) Remote Control Module are not recommended for use with the Dual Maverick® 450.

FIGURE A.6

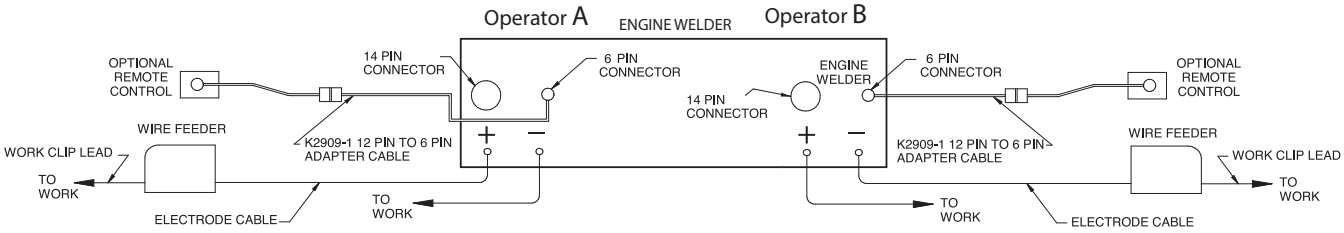

⚠ CAUTION

Certain electrical devices cannot be powered by this product. See Table A.2

TABLE A.2
ELECTRICAL DEVICE USE WITH THIS PRODUCT

Type	Common Electrical Devices	Possible Concerns
Resistive	Heaters, toasters, incandescent light bulbs, electric range, hot pan, skillet, coffee maker.	NONE
Capacitive	TV sets, radios, microwaves, appliances with electrical control.	Voltage spikes or high voltage regulation can cause the capacitative elements to fail. Surge protection, transient protection, and additional loading is recommended for 100% fail-safe operation. DO NOT RUN THESE DEVICES WITHOUT ADDITIONAL RESISTIVE TYPE LOADS.
Inductive	Single-phase induction motors, drills, well pumps, grinders, small refrigerators, weed and hedge trimmers.	These devices require large current inrush for starting. Some synchronous motors may be frequency sensitive to attain maximum output torque, but they SHOULD BE SAFE from any frequency induced failures.
Capacitive / Inductive	Computers, high resolution TV sets, complicated electrical equipment.	An inductive type line conditioner along with transient and surge protection is required, and liabilities still exist. DO NOT USE THESE DEVICES WITH THIS PRODUCT.

The Lincoln Electric Company is not responsible for any damage to electrical components improperly connected to this product.

OPERATION

SAFETY PRECAUTIONS

Read and understand this entire section before operating your Dual Maverick® 450.

⚠ WARNING

- **Do not attempt to use this equipment until you have thoroughly read the engine manufacturer's manual supplied with your welder. It includes important safety precautions, detailed engine starting, operating and maintenance instructions, and parts lists.**

ELECTRIC SHOCK can kill.

- **Do not touch electrically live parts or electrode with skin or wet clothing.**
- **Insulate yourself from work and ground**
- **Always wear dry insulating gloves.**

ENGINE EXHAUST can kill.

- **Use in open, well ventilated areas or vent exhaust outside**
- **Do not stack anything near the engine.**

MOVING PARTS can injure.

- **Do not operate with doors open or guards off.**
- **Stop engine before servicing.**
- **Keep away from moving parts**

- **Only qualified personnel should operate this equipment.**
- **Always operate the welder with the door closed and the side panels in place as these provide maximum protection from moving parts and insure proper cooling air flow.**

GENERAL DESCRIPTION

The Dual Maverick® 450 is a dual-operator multi-purpose diesel engine-driven welding power source. The machine uses a brushless alternator / generator for DC multipurpose welding, for 220 VAC single phase, 380VAC three phase. The DC welding control system uses state of the art Chopper Technology for superior welding performance.

The Dual Maverick® 450 is fitted with a selectable VRD (Voltage Reduction Device). The VRD operates in the Stick, TIG, PIPE and GOUGE modes reducing the OCV to <13 volts, increasing operator safety when welding is performed in environments with increased hazard of electric shock such as wet areas and hot, humid sweaty conditions.

FOR AUXILIARY POWER:

Start the engine and set the IDLER control switch to the desired operating mode. Full power is available regardless of the welding control settings providing no welding current is being drawn.

ENGINE OPERATION

Before Starting the Engine:

- Be sure the machine is on a level surface.
- Open side engine door and remove the engine oil dipstick and wipe it with a clean cloth. Reinsert the dipstick and check the level on the dipstick.
- Add oil (if necessary) to bring the level up to the full mark. Do not overfill. Close engine door.

- Check radiator for proper coolant level. (Fill if necessary).
- See Engine Owner's Manual for specific oil and coolant recommendations.

ADD FUEL

⚠ WARNING

DIESEL FUEL can cause fire.

- **Stop engine while fueling.**
- **Do not smoke when fueling.**
- **Keep sparks and flame away from tank.**
- **Do not leave unattended while fueling.**
- **Wipe up spilled fuel and allow fumes to clear before starting engine.**
- **Do not overfill tank, fuel expansion may cause overflow.**

DIESEL FUEL ONLY-
Low sulfur fuel or ultra low sulphur fuel in U.S.A. and Canada.

- **Remove the fuel tank cap.**
- **Fill the tank. DO NOT FILL THE TANK TO THE POINT OF OVERFLOW.**
- **Replace the fuel cap and tighten securely.**
- **See Engine Owner's Manual for specific fuel recommendations.**

HAND PRIMER BUTTON

Air in the fuel system will cause the following engine problems:

- Hard to start
- Run rough
- Misfire
- Fuel knock

For faster air purge, a small amount of air can be vented from the system by pumping the hand primer button on the fuel filter head. (See Figure B.1, Engine Service Side View)

FIGURE B.1 Engine Service Side View

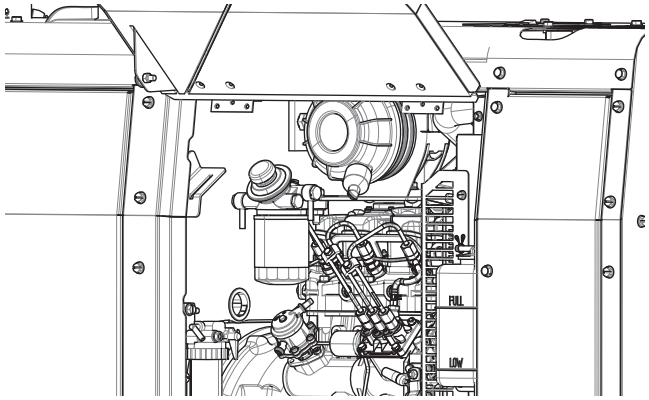

RECOMMENDED APPLICATIONS

The Dual Maverick® 450 provides excellent constant current DC welding output for stick (SMAW) and TIG welding. The Dual Maverick® 450 also provides excellent constant voltage DC welding output for MIG (GMAW), Innershield (FCAW), Outershield (FCAW-G) and Metal Core welding. In addition the Dual Maverick® 450 can be used for Arc Gouging with carbons up to 3/8”(10mm) in diameter.

The Dual Maverick® 450 is not recommended for pipe thawing.

GENERATOR

The Dual Maverick® 450 provides smooth 220 VAC single phase and 380 VAC three phase, 50Hz output for auxiliary power and emergency standby power.

AUTO-START INSTRUCTION

1. To make Auto Start active, press home button for the main menu. Rotate knob to select "Setup" icon and press knob.
2. Auto-Start On/Off: Determines On/Off states for Auto-start feature.
   a. Rotate knob to select “Auto-Start On/Off” and press knob to confirm.
   b. Rotate knob to select “On” or ”Off” and press knob to confirm.
3. Auto-Start No Load Period: Determines when no load is on, how long the welder will be on before auto shutdown. This period will be reset to the setting value when load appears.
   a. Rotate knob to select “Auto-Start No Load Period” and press knob to confirm.
   b. Rotate knob to change the period from 15 min to 120 min and press knob to confirm.
4. Tap-Start Active Period: Determines how long tap start will be active.
   a. Rotate knob to select “Tap-Start Active Period” and press knob to confirm.
   b. Rotate knob to change the period from 15 min to 120 min and press knob to confirm.
5. Press home button to go to the main menu. Select welding mode. Confirm Auto Start settings on the display.
6. When Auto-Start feature is turned "ON" and a remote is plugged in the engine can be remotely turned off by completing the following pattern on the remote knob:
   1) Remote Knob to Min.
   2) Remote knob to Max.
   3) Remote Knob to Middle.
   4) Remote knob to Max.
   5) Remote knob to Min.
   Each step should be completed within 3 seconds.

7) Auto start does not work when small loads such as across the arc wire feeders are connected. In this case turn Auto Start off.

8) To restart engine, firmly tap and hold electrode to work for 0.1 to 1 sec. Ensure there is direct contact between metal part of the electrode and work.

9) Pull electrode away from work and wait a few seconds for engine to come up to speed.

NOTE: Small loads across the output terminals such as an across the arc wire feeder may cause the auto start count to restart without shutting down the engine. Remove any such small loads. Or turn Auto start off.

BREAK-IN PERIOD

Lincoln Electric selects high quality, heavy-duty industrial engines for the portable welding machines we offer. While it is normal to see a small amount of crankcase oil consumption during initial operation, excessive oil use, wetstacking (oil or tar like substance at the exhaust port), or excessive smoke is not normal.

Larger machines with a capacity of 350 amperes and higher, which are operated at low or no-load conditions for extended periods of time are especially susceptible to the conditions described above. To accomplish successful engine break-in, most diesel-powered equipment needs only to be run at a reasonably heavy load within the rating of the welder for some period of time during the engine’s early life. However, if the welder is subjected to extensive light loading, occasional moderate to heavy loading of the engine may sometimes be necessary. Caution must be observed in correctly loading a diesel/generator unit.

1. Connect the welder output studs to a suitable resistive load bank. Note that any attempt to short the output studs by connecting the welding leads together, direct shorting of the output studs, or connecting the output leads to a length of steel will result in catastrophic damage to the generator and voids the warranty.
2. Set the welder controls for an output current and voltage within the welder rating and duty cycle. Note that any attempt to exceed the welder rating or duty cycle for any period of time will result in catastrophic damage to the generator and voids the warranty.
3. Periodically shut off the engine and check the crankcase oil level.

⚠ CAUTION

During break-in, subject the Welder to moderate loads. Avoid long periods running at idle. Before stopping the engine, remove all loads and allow the engine to cool several minutes.

ENGINE OPERATION

STARTING THE ENGINE

1. Open the engine service compartment door and check that the fuel shutoff valve on the fuel filter separator located on the liftbale is in the open position.
2. Check for proper oil level and coolant level. Close engine service compartment door.
3. Remove heavy auxiliary loads from the AC power receptacles.
4. Firmly set the Operator Selector Switch to Single or Dual. The Operator Selector Switch can be set to Single or Dual mode and must be securely in one of the two positions.
5. Set the RUN/IDLE/STOP switch to “AUTO IDLE”.
6. For cold weather starting, press Glow Plug Button and hold 15 to 20 seconds.
7. Press START button until the engine starts or for up to 10 seconds.
8. Release the engine START button when the engine starts.
9. Allow the engine to warm up at low idle speed for several minutes before applying a load and/or switching to high idle. Allow a longer warm up time in cold weather.

COLD WEATHER STARTING

With a fully charged battery and the proper weight oil, the engine should start satisfactorily even down to about -4°F(-20°C). Below this it may be desirable to use a block heater.

NOTE: Extreme cold weather starting may require longer glow plug operations.

STOPPING THE ENGINE

Switch the RUN/IDLE/STOP switch to “STOP”. This turns off the voltage supplied to the shutdown solenoid. A backup shutdown can be accomplished by shutting off the fuel valve located on the fuel pre-filter located on the liftbale.

EMERGENCY STOPPING

Emergency shutoff controls are for EMERGENCY USE ONLY. DO NOT use emergency shutoff devices or controls for normal stopping procedure.

TYPICAL FUEL CONSUMPTION

Refer to Table B.2 for typical fuel consumption of the Dual Maverick® 450 Engine for various operating settings.

TABLE B.2

TYPICAL DUAL MAVERICK 450 FUEL CONSUMPTION		
Load	PERKINS 403D-11 T4i gal./hr (liters/hr)	Operating Time for 20 gallons (75.7 L) (Hours)
Low Idle No Load 2120 RPM	0.226(0.856)	88.50
STICK WELD OUTPUT 50A @ 22V	0.453(1.716)	44.15
STICK WELD OUTPUT 100A @ 24V	0.536(2.027)	37.31
STICK WELD OUTPUT 150A @ 26V	0.646(2.447)	30.96
STICK WELD OUTPUT 200A @ 28V	0.77(2.917)	25.97
STICK WELD OUTPUT 300A @ 32V	1.012(3.831)	19.76
STICK WELD OUTPUT 350A @ 34V (OR 450A @ 26V	1.41(5.337)	14.18
Aux. 5000W	0.78(2.954)	25.64
Aux. 8000W	0.973(3.684)	20.55
Aux. 13000W	1.457(5.514)	13.73
AUTO START IDLE Wait State	0	N/A

NOTE: This data is for reference only. Fuel consumption is approximate and can be influenced by many factors, including engine maintenance, environmental conditions and fuel quality.

WELDER OPERATION

DUTY CYCLE

Duty Cycle is the percentage of time the load is being applied in a 10 minute period. For example a 60% duty cycle, represents 6 minutes of load and 4 minutes of no load in a 10 minute period.

ELECTRODE INFORMATION

For any electrode the procedures should be kept within the rating of the machine. For information on electrodes and their proper application see (www.lincolnelectric.com) or the appropriate Lincoln publication.

The Dual Maverick® 450 can be used with a broad range of DC stick electrodes. The MODE switch provides two stick welding settings as follows:

Constant Current (CC-STICK) Welding

Stick "Mode" is designed for horizontal and vertical-up welding with all types of electrodes, especially low hydrogen.

The ARC Force setting on the mode screen controls the short circuit current (arc-force) during stick welding to adjust for a soft or crisp arc. Increasing the number from -10(soft) to +10(crisp) increases the short circuit current and prevents sticking of the electrode to the plate while welding. This can also increase spatter. It is recommended that the ARC CONTROL be set to the minimum number without electrode sticking. Start with the dial set at 0 (OFF).

Note: Due to the low OCV with the VRD on, a very slight delay during striking of the electrodes may occur. Due to the requirement of the resistance in the circuit to be low for a VRD to operate, a good metal-to-metal contact must be made between the metal core of the electrode and the job. A poor connection anywhere in the welding output circuit may limit the operation of the VRD. This includes a good connection of the work clamp to the job. The work clamp should be connected as close as practical to where the welding will be performed.

For Re-Striking Electrodes

Some electrodes form a cone at the end of the electrode after the welding arc has been broken, particularly iron powder and low hydrogen electrodes. This cone will need to be broken off in order to have the metal core of the electrode make contact.

E6010 - To begin welding with VRD active.

E7018, E7024 - Tap, slide and lift in one motion.

Once the arc is started, normal welding technique for the application is then used.

For other electrodes the above techniques should be tried first and varied as needed to suit operator preference. The goal for successful starting is good metal to metal contact.

DOWNHILL PIPE Welding

This slope controlled mode is intended for "out-of-position" and "down hill" pipe welding where the operator would like to control the current level by changing the arc length.

The ARC FORCE setting sets the short circuit current (arc-force) during stick welding to adjust for a soft or more forceful digging arc (crisp). Increasing the number from -10(soft) to +10(crisp) increases the short circuit current which results in a more forceful digging arc.

Typically a forceful digging arc is preferred for root and hot passes. A softer arc is preferred for fill and cap passes where weld puddle control and deposition (“stacking” of iron) are key to fast travel speeds. This can also increase spatter.

It is recommended that the ARC FORCE be set to the minimum number without electrode sticking. Start with the setting at 0.

NOTE: With the VRD set to the “ON” position (See figure A.2 for location) there is no output in the downhill pipe mode.

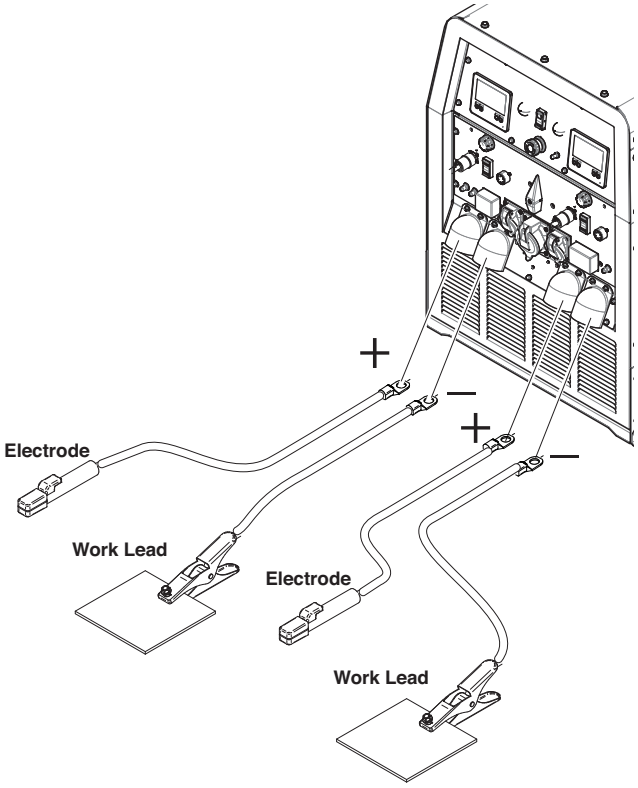

TIG Welding

The TOUCH START TIG is for DC TIG (Tungsten Inert Gas) welding. To initiate a weld, the selector knob is used to set to the desired current and the tungsten is touched to the work. During the time the tungsten is touching the work there is very little voltage or current and, in general, no tungsten contamination. Then, the tungsten is gently lifted off the work in a rocking motion, which establishes the arc.

When in the touch start TIG mode and when a Amptrol is connected to the 6-Pin connector the selector knob is used to set the maximum current range of the current control of the Amptrol.

The ARC FORCE is not active in the TIG mode. To STOP a weld, simply pull the TIG torch away from the work.

When the arc voltage reaches approximately 30 Volts the arc will go out and the machine will reset the current to the Touch Start level.

To reinitiate the arc, retouch the tungsten to the work and lift. Alternatively, the weld can be stopped by releasing the Amptrol or arc start switch.

The Dual Maverick® 450 can be used in a wide variety of DC TIG welding applications. In general the 'Touch Start' feature allows contamination free starting without the use of a Hi-frequency unit.

If desired, the K930-2 TIG Module can be used with the Dual Maverick® 450. The settings are for reference.

Dual Maverick® 450 settings when using the K930-2 TIG Module with an Amptrol or Arc Start Switch:

- Set the MODE to the TOUCH START TIG setting.
- Set the "IDLER" Switch to the "AUTO/IDLE/RUN" position.
- Set the "Weld Output Override" to the "REMOTELY CONTROLLED" position.

This will keep the "Solid State" contactor open and provide a "cold" electrode until the Amptrol or Arc Start Switch is pressed.

When using the TIG Module, the selector knob on the Dual Maverick® 450 is used to set the maximum range of the CURRENT CONTROL on the TIG Module or an Amptrol if connected to the TIG Module.

NOTE: The TIG process is to receive a low voltage welding process. There is no difference in operation with the VRD "ON" or "OFF" for this mode.

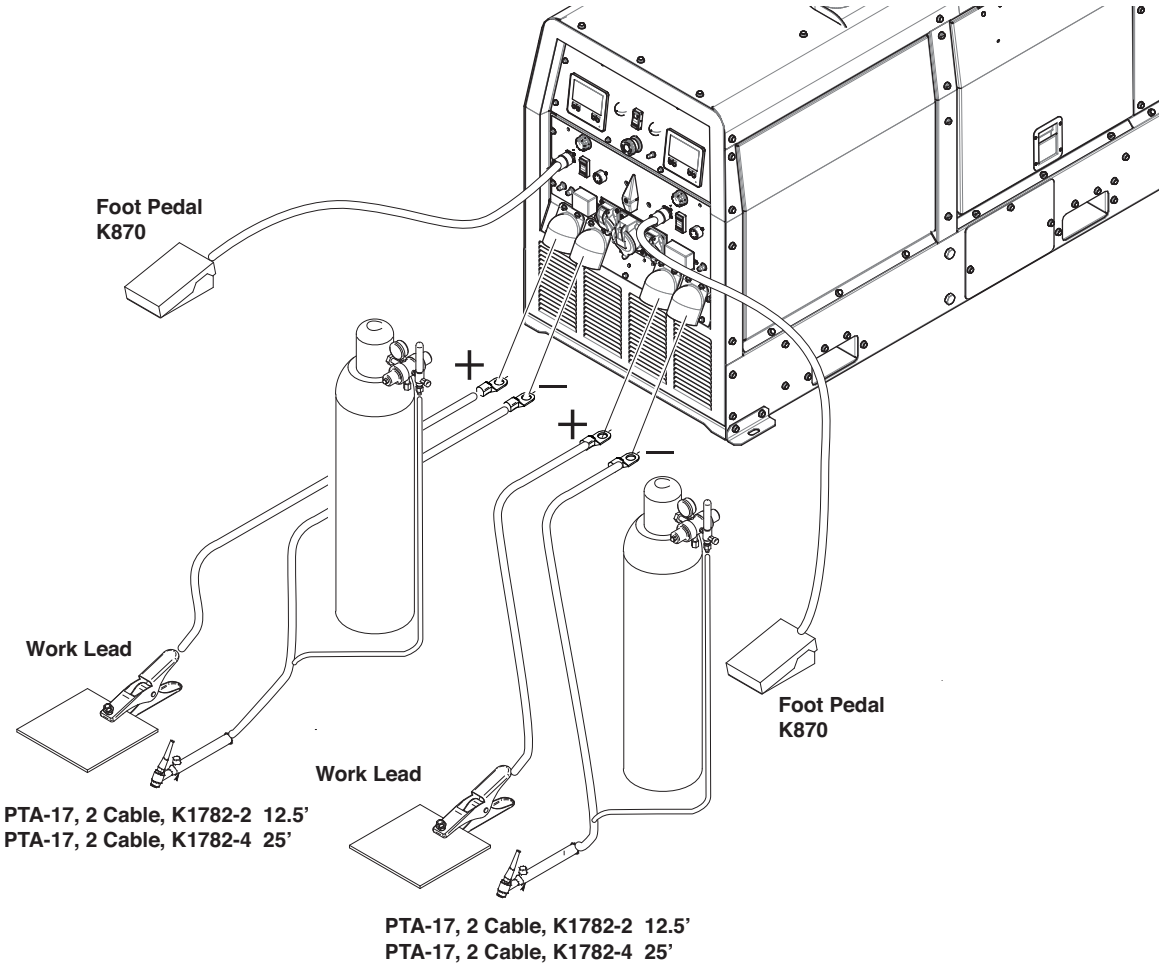

TABLE B.3

TYPICAL CURRENT RANGES (1) FOR TUNGSTEN ELECTRODES(2)

Tungsten Electrode Diameter in. (mm)		DCEN (-)	DCEP (+)	Approximate Argon Gas Flow Flow Rate C.F.H. (l /min.)				TIG TORCH Nozzle Size (4), (5)
		1%, 2% Thoriated Tungsten	1%, 2% Thoriated Tungsten	Aluminum		Stainless Steel		
.010	(.25)	2-15	(3)	3-8	(2-4)	3-8	(2-4)	#4, #5, #6
0.020	(.50)	5-20	(3)	5-10	(3-5)	5-10	(3-5)	
0.040	(1.0)	15-80	(3)	5-10	(3-5)	5-10	(3-5)	
1/16	(1.6)	70-150	10-20	5-10	(3-5)	9-13	(4-6)	#5, #6
3/32	(2.4)	150-250	15-30	13-17	(6-8)	11-15	(5-7)	#6, #7, #8
1/8	(3.2)	250-400	25-40	15-23	(7-11)	11-15	(5-7)	
5/32	(4.0)	400-500	40-55	21-25	(10-12)	13-17	(6-8)	#8, #10

(1) When used with argon gas. The current ranges shown must be reduced when using argon/helium or pure helium shielding gases.
(2) Tungsten electrodes are classified as follows by the American Welding Society (AWS):

Pure	EWP
1% Thoriated	EWTh-1
2% Thoriated	EWTh-2

Though not yet recognized by the AWS, Ceriated Tungsten is now widely accepted as a substitute for 2% Thoriated Tungsten in AC and DC applications.
(3) DCEP is not commonly used in these sizes.
(4) TIG torch nozzle "sizes" are in multiples of 1/16ths of an inch:

# 4 = 1/4 in.	(6 mm)
# 5 = 5/16 in.	(8 mm)
# 6 = 3/8 in.	(10 mm)
# 7 = 7/16 in.	(11 mm)
# 8 = 1/2 in.	(12.5 mm)
#10 = 5/8 in.	(16 mm)

(5) TIG torch nozzles are typically made from alumina ceramic. Special applications may require lava nozzles, which are less prone to breakage, but cannot withstand high temperatures and high duty cycles.

B-6

WIRE WELDING-CV

Connect a wire feeder to the Dual Maverick® 450 according to the instructions in INSTALLATION INSTRUCTIONS Section.

The Dual Maverick® 450 in the CV-WIRE mode, permits it to be used with a broad range of flux cored wire (Innershield and Outershield) electrodes and solid wires for MIG welding (gas metal arc welding). Welding can be finely tuned using the PINCH from –10 (soft) to +10 (crisp) changes the arc from soft and washed-in to crisp and narrow. It acts as an inductance/pinch control. The proper setting depends on the procedure and operator preference. Start with the setting at 0 (OFF).

If the engine bogs while wire welding check that the power required for the process does not exceed the rated power of the machine. For unusually high wire feed speeds and low voltage combinations it may be necessary to disable the variable speed feature(see “SET-UP” section) and set the ignition switch to high idle.

ARC GOUGING

Dual Maverick® 450 can be used for Arc Gouging with carbons up to 3/8”(10mm) in diameter.

Use the selector knob to adjust output current to the desired level for the gouging electrode being used.

The ARC FORCE is not active in the ARC GOUGING Mode. The ARC FORCE is automatically set to maximum when the ARC GOUGING mode is selected which provides the best ARC GOUGING performance.

PARALLELING

When paralleling machines in order to combine their outputs, all units must be operated in the CC-STICK mode only at the same output settings. Use the selector knob to choose stick mode from the home screen. Operation in other modes may produce erratic outputs, and large output imbalances between the units.

AUXILIARY POWER OPERATION

Start the engine and set the IDLER control switch to the desired operating mode. Full power is available regardless of the welding control settings, if no welding current is being drawn.

For heavy loads set to HIGH IDLE and maximum weld output for maximum starting power.

SIMULTANEOUS WELDING AND AUXILIARY POWER LOADS

It must be noted that the specified auxiliary power ratings are with no welding load.

Simultaneous welding and power loads are specified in table B.5.

TABLE B.5 DUAL MAVERICK® 450 SIMULTANEOUS WELDING AND POWER LOADS

Simultaneous Each Side Dual Current	Single Current	Aux Power	3 Phase Amps	Single Phase Amps
0	0	13000	21.3	15.0
50	100	11000	16.7	15.0
100	200	7300	11.1	15.0
150	300	2600	4.0	11.8
175	350	0	0.0	0.0
225	450	0	0.0	0.0

DISPLAY OPERATION:
SEE FIG B.2

1. **HOME** - Brings up the home screen (main menu)
2. **REMOTE CONTROL** - Toggles the remote control ON / OFF
3. **HELP** - Displays additional information describing the function
4. **BACK** - Goes back to the previous screen
5. **SELECTOR KNOB -** rotate adjusts values, push confirms the selected value or choice

Note: When Dual Maverick 450 is first started, it will return to the screen that was shown when the machine was turned off.

FIGURE B.2

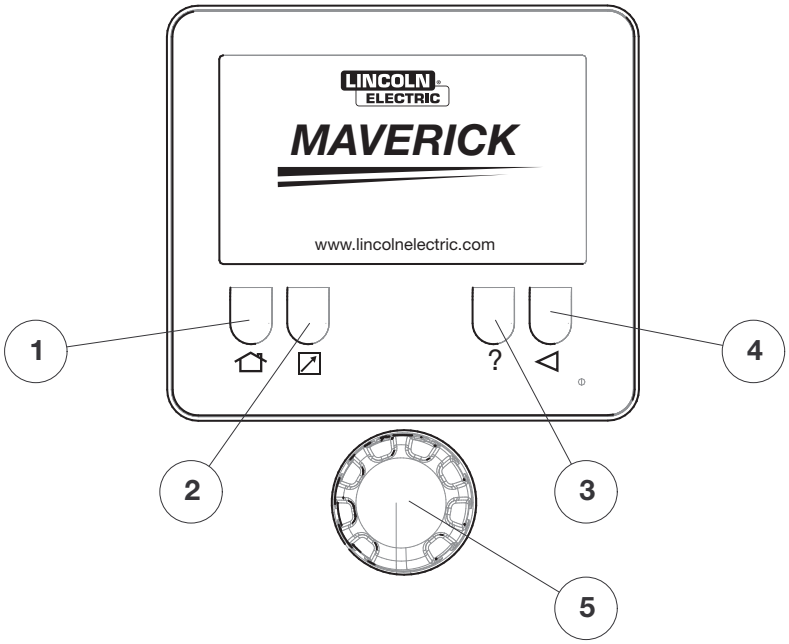

HOME SCREEN

Pressing the Home button displays the home menu. Rotate the knob to select the desired weld mode, or choose engine options or set-up menu. Push the selector knob to make the selection.

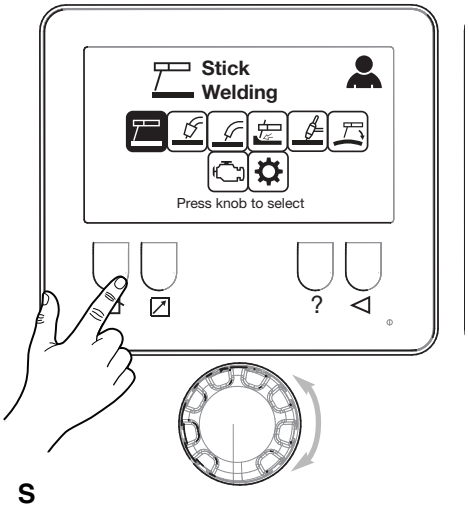

STICK WELDING

Manual entry operates like a traditional welding machine. Simply set the desired preset amperage or voltage and begin to weld. The “Preset” screen appears when welding is not active. It shows the amount of fuel on the left hand side; the weld mode in the lower left hand corner; the preset value in the middle; and the weld output status in the upper right corner.

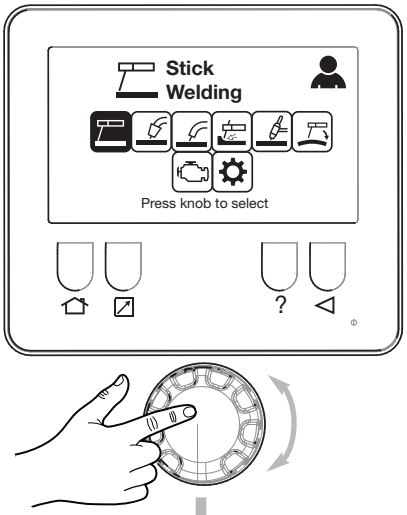

Stick Welding Basic OCV

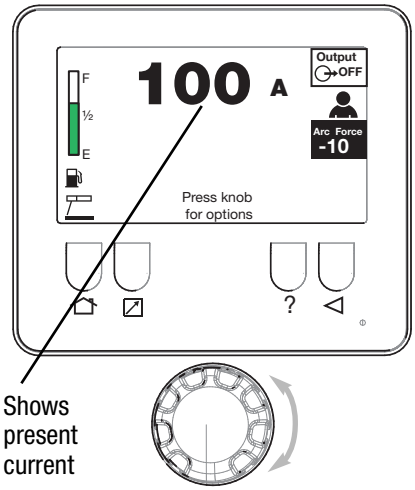

Stick Welding Basic OCV
w Remote

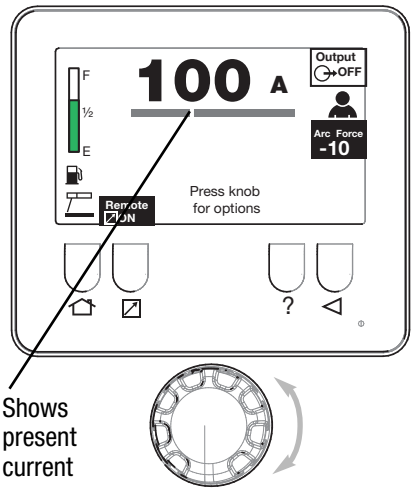

Stick Welding Basic OCV
w Auto-start

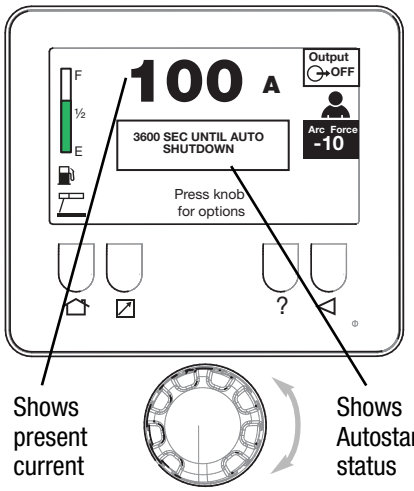

Stick Welding Basic
Arc is struck

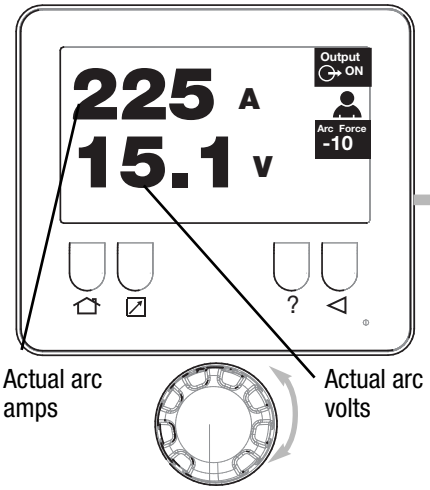

Stick Welding Basic
5 seconds after arc goes out

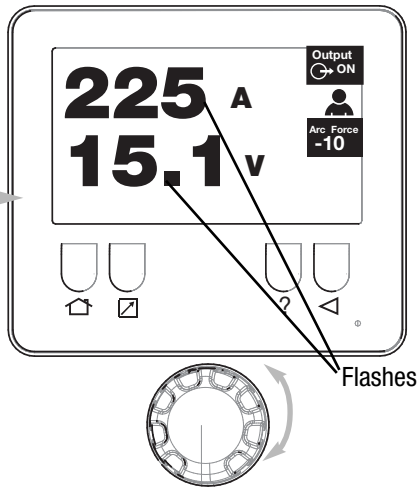

Stick Options

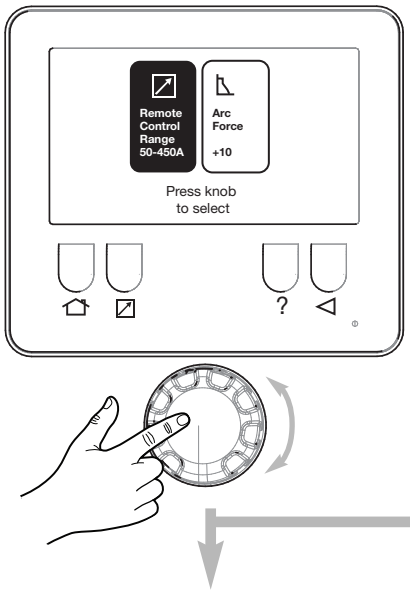

All weld modes support using a remote control like K857-1. Plug the remote into the 6 pin connector on the front of the machine.

Press the remote button on the display to toggle between control at the remote and control at the knob on the machine. The remote button does not function when welding is occuring.

When the remote is enabled, a bar will appear underneath the preset value showing the remote range. The standard range allows the remote to adjust from the minimum to the maximum value of the machine.

Stick Welding Remote Control

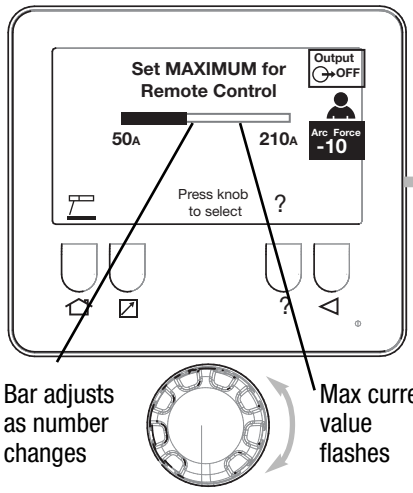

Bar adjusts as number changes

Max current value flashes

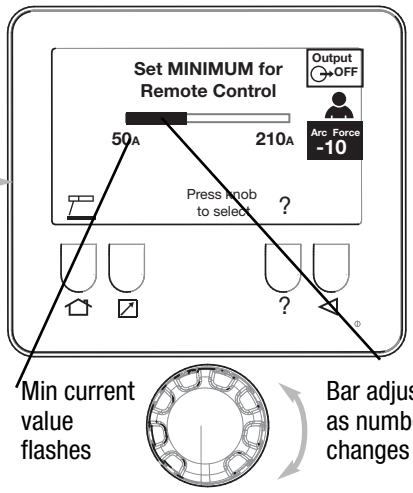

Min current value flashes

Bar adjusts as number changes

Stick Welding ARC FORCE

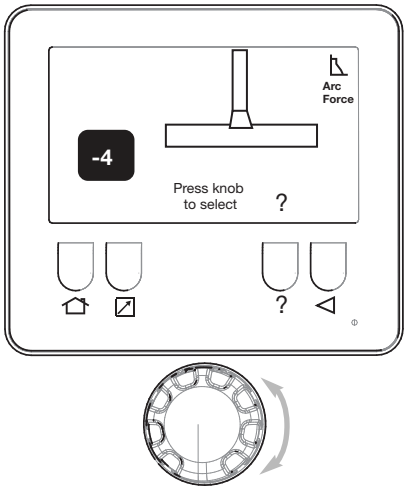

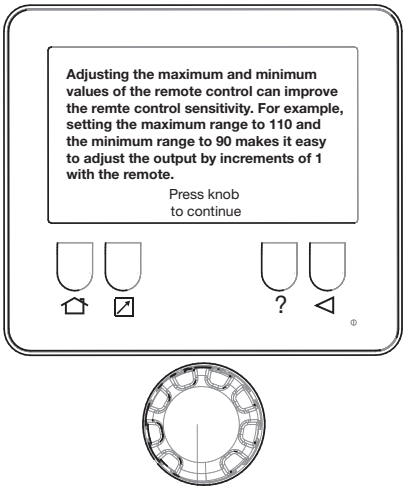

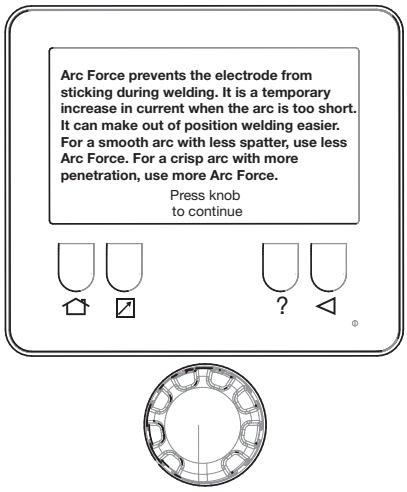

MIG/FCAW WELDING

Manual entry operates like a traditional welding machine. Simply set the desired preset amperage or voltage and begin to weld. The “Preset” screen appears when welding is not active. It shows the amount of fuel on the left hand side; the weld mode in the lower left hand corner; the preset value in the middle; and the weld output status in the upper right corner.

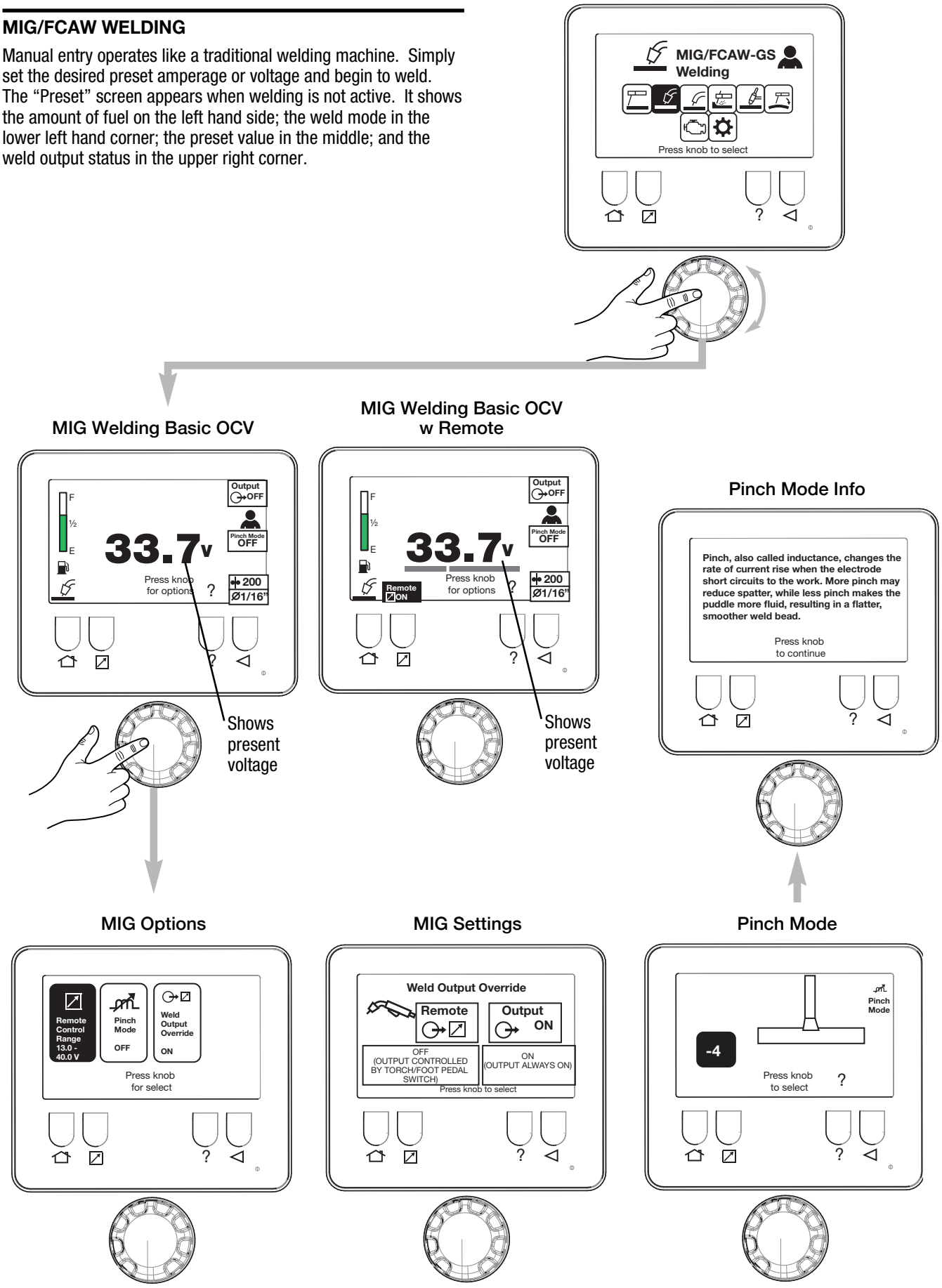

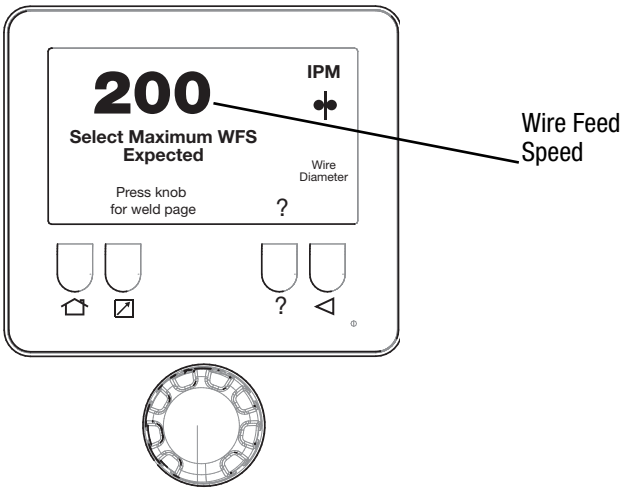

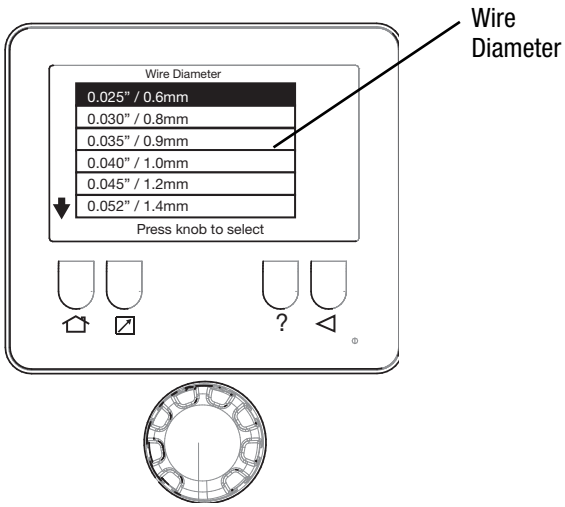

Note: Select the maximum wire feed speed (WFS) that will be used during the welding session to ensure power output to the wire feeder is sufficient.

ENGINE STATUS SCREEN

The Engine Status screen provides information about the engine servicing and operation.

Five parts of the engine are monitored for service: Oil, Coolant, Air Filter, Fan Belt and Fuel Filter. To view detailed information about an item, rotate the knob until the item is highlighted in red. The top of the screen displays the number of hours remaining until service is required for the selected item.

The red/yellow/green bars for each item indicate how much time is left.

Green = Normal operation

Yellow = Service is required soon

Red = Service is overdue

After service has been performed on an item, press and hold the knob for 5 second to reset the service interval timer.

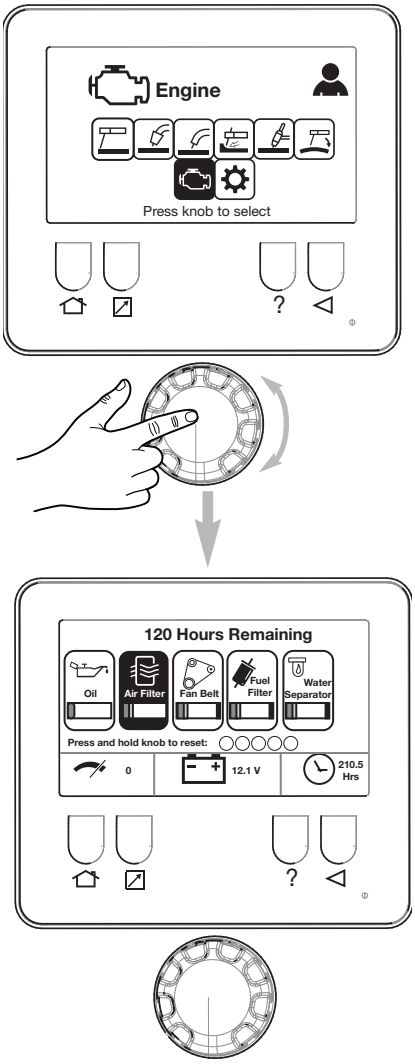

SET-UP

The set-up allows for customization of the Maverick. Options available in the Set-up menu are:

- **AUTO-START: NO LOAD PERIOD**
- **TAP START ACTIVE PERIOD**
- **AUTO-START: ON/OFF**
- **PIN**
- **DISPLAY BRIGHTNESS**
- **DIAGNOSTIC INFORMATION** - Diagnostic information page can be used to get useful information about the welder. ECG FAULT CODE is the number of pulse detected from ECG fault lamp. The fault codes can be found in troubleshooting section (E-4).
- **NEW PCB CALIBRATION** - When new PCB(s) is installed on the machine, calibration is needed for both Single and Dual modes. On Single mode, only follow the instructions on the left display. On Dual mode, only follow the instructions on the right display. To ensure proper calibration ensure mode was in Stick at 150 amps set point before entering setup menu. Failure to do so will not allow welder to enter calibration mode.
- **VARIABLE SPEED ON/OFF** - Turn the variable speed function off when desired weld output is not reached. For example, in high altitude areas that have lower oxygen levels, the operator can turn off the variable speed function to increase weld output.
- **RESTORE FACTORY SETTINGS**
- **MACHINE SELECT** - When a new PCB(s) is installed on the machine, the PCB has to go through a "Machine Select" process. This setup option should only be used if the initial "Machine Select" process was not completed successfully. To enter this setup option use the following pass code: 3210. Ensure the correct K # and Code number is used for the machine. Failure to do so can permanently damage the welder.

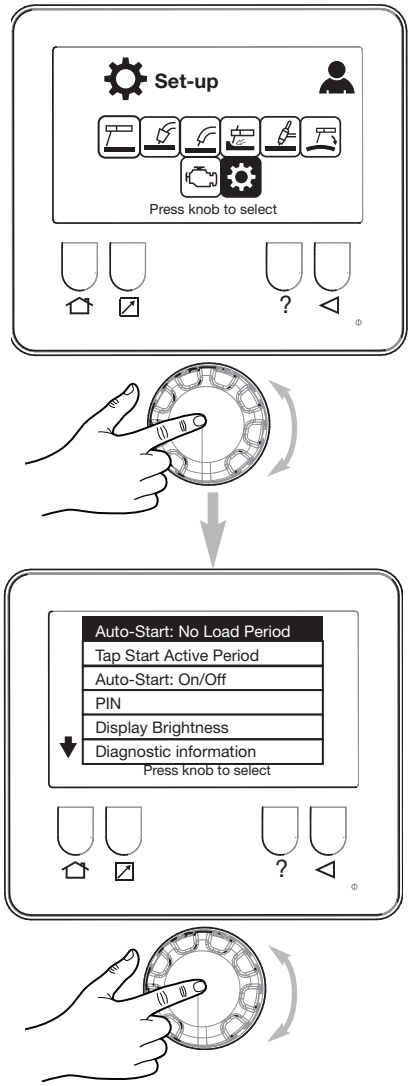

Auto-Start: No Load Period

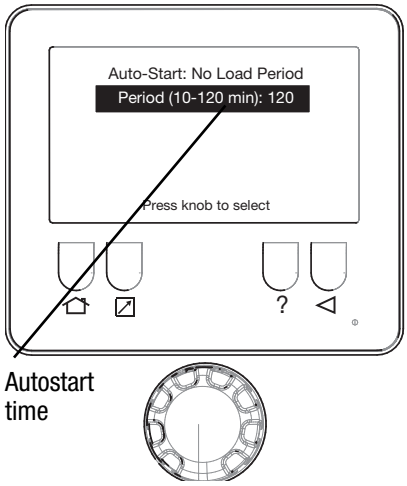

Display Brightness

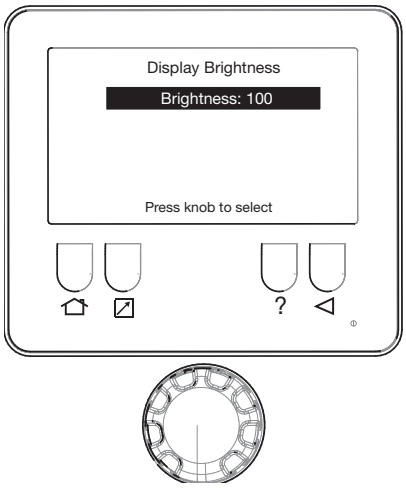

Tap Start Active Period

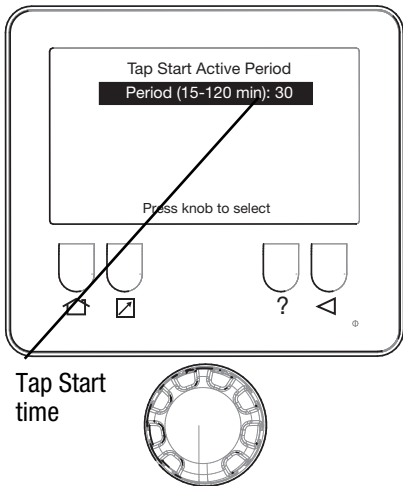

Restore Factory Settings

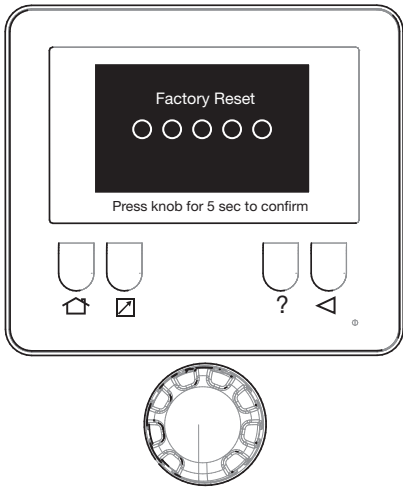

Auto Start: ON/OFF

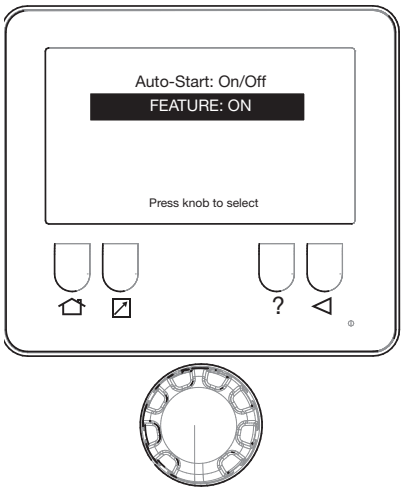

PIN

DO NOT FORGET THE PIN! The PIN may only be reset by a Lincoln Authorized Service Shop.

To turn on Operator security, rotate the knob until Operator PIN is highlighted and press the knob.

Rotate the knob to turn the PIN on or off. Press the knob to select.

Rotate the knob to adjust the value of the PIN. Press the knob to advance to the next number. Press the BACK button to go the the previous number.

Entry of the Supervisor PIN is similar to the Operator PIN.

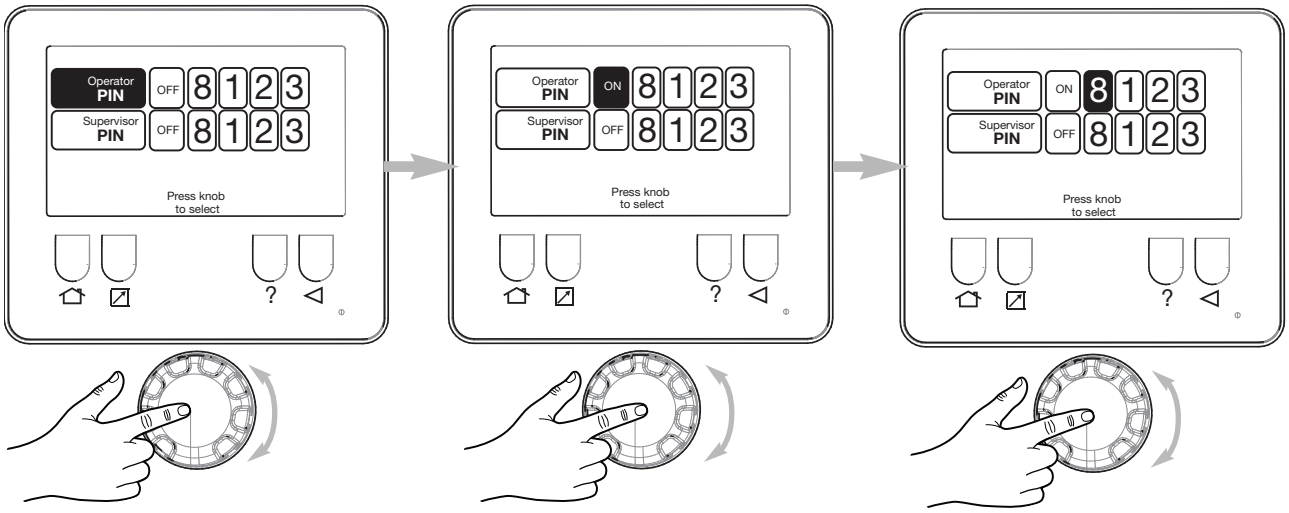

Variable Speed Setup

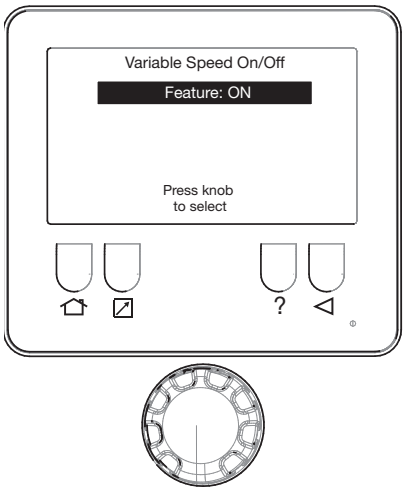

Diagnostic Info

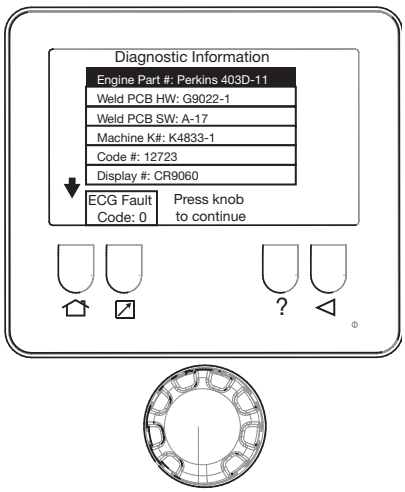

New PCB Calibration - Right Side Display (Dual Mode)

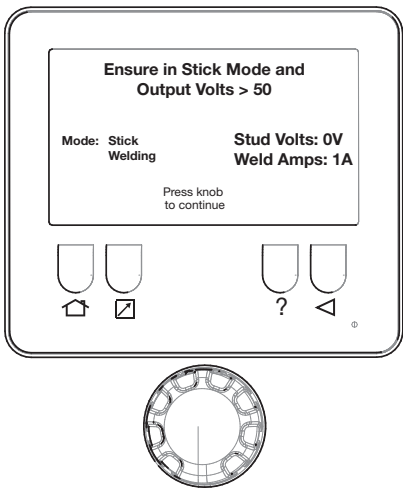

New PCB Calibration - Left Side Display (Single Mode)

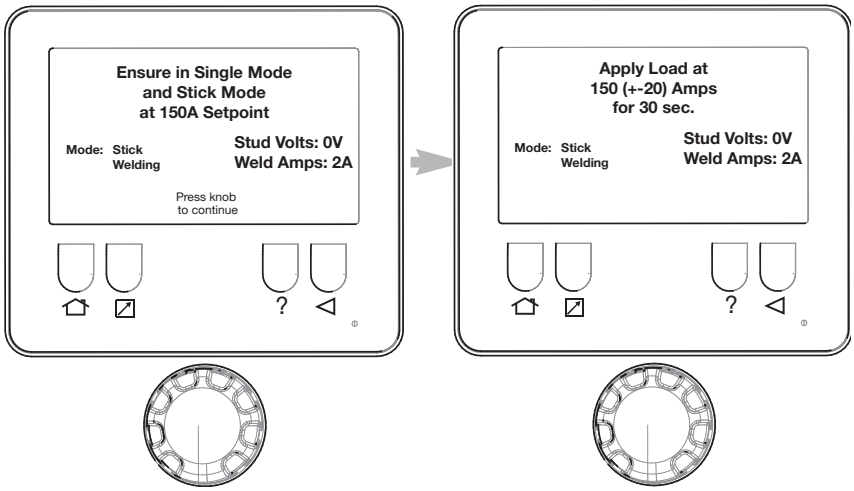

MACHINE SELECT

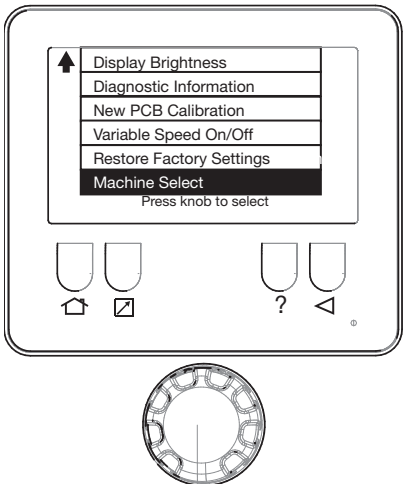

Enter the correct K# and Code # for the welder the PCB is being installed on. K# and Code # can be found above the top name plate("Machine Information Above"). Failure to enter the correct K# and Code # may result in permanent damage to the welder.

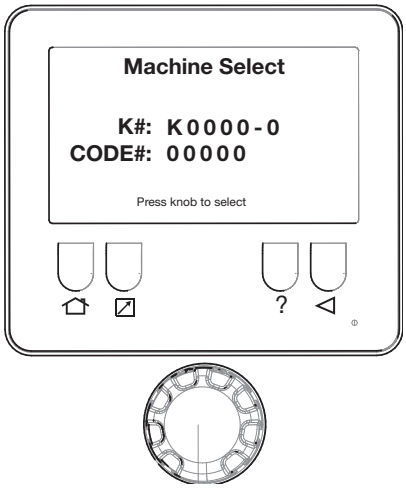

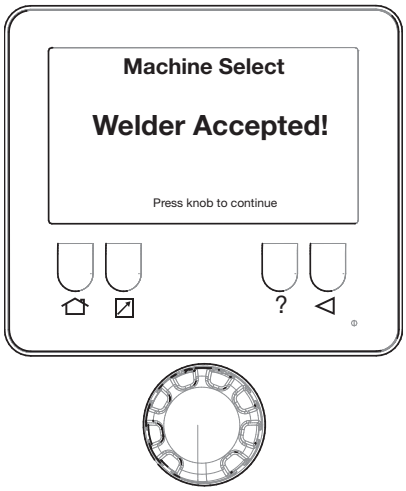

If correct k # and Code # entered. The Welder will be accepted.

ACCESSORIES

OPTIONAL FIELD INSTALLED ACCESSORIES

K2636-1 Medium Trailer

K2639-1 Fender Kit

K2640-1 Cable Rack

K2641-2 Four Wheel Trailer

K857 Remote Control

K857-1 Remote Control

K2613-5A1 Ln-25 PRO with K126 PRO Gun

K126-12 K126 PRO Gun

KP1696-068 Drive Roll Kit

K12038-2 Invertec PC610 Plasma

K12048-1 Tomahawk 1025 Plasma

MAINTENANCE

SAFETY PRECAUTIONS

⚠ WARNING

- **Have qualified personnel do all maintenance and troubleshooting work.**
- **Turn the engine off before working inside the machine or servicing the engine.**
- **Remove guards only when necessary to perform maintenance and replace them when the maintenance requiring their removal is complete. If guards are missing from the machine, obtain replacements from a Lincoln Distributor. (See Operating Manual Parts List.)**

Read the Safety Precautions in the front of this manual and in the Engine Owner's Manual before working on this machine.

Keep all equipment safety guards, covers, and devices in position and in good repair. Keep hands, hair, clothing, and tools away from the gears, fans, and all other moving parts when starting, operating, or repairing the equipment.

ROUTINE AND PERIODIC MAINTENANCE

DAILY

- Check the Engine oil levels.
- Refill the fuel tank to minimize moisture condensation in the tank.
- Open the water drain valve located on the bottom of the water separator element 1 or 2 turns and allow to drain into a container suitable for diesel fuel for 2 to 3 seconds. Repeat the above drainage procedure until diesel fuel is detected in the container.
- Check coolant level in the coolant recovery bottle.

WEEKLY

Blow out the machine with low pressure air periodically. In particularly dirty locations, and the radiator, this may be required once a week.

ENGINE MAINTENANCE

Refer to the "Periodic Checks" section of the Engine Operator's Manual for the recommended maintenance schedule of the following:

a) Engine Oil and Filter

b) Air Cleaner

c) Fuel Filter - and Delivery System

d) Alternator Belt

e) Battery

f) Cooling System

Refer to Table D.1 at the end of this section for various engine maintenance components.

TABLE D.1

REPLACEMENT SERVICE ITEMS			
ITEM	MAKE	PART NUMBER	SERVICE INTERVAL
AIR CLEANER ELEMENT	DONALDSON	P505976*	CLEAN AS NEEDED REPLACE EVERY 500 HOURS
FAN BELT	GATES	9426-10762	REPLACE EVERY 1000 HOURS
OIL FILTER	PERKINS	140517050*	REPLACE EVERY 500 HOURS
WATER SEPARATOR	LINCOLN	S32619-3*	REPLACE EVERY 500 HOURS
FUEL FILTER	PERKINS	4429491*	REPLACE EVERY 500 HOURS
BATTERY	—	BCI GROUP 58	INSPECT EVERY 500 HOURS

* Item included in K3598-2 Engine Service Kit

S32694 VM

AIR FILTER

⚠ CAUTION

Excessive air filter restriction will result in reduced engine life.

⚠ WARNING

Never use gasoline or low flash point solvents for cleaning the air cleaner element. A fire or explosion could result.

⚠ CAUTION

Never run the engine without the air cleaner. Rapid engine wear will result from contaminants, such as dust and dirt being drawn into the engine.

The diesel engine is equipped with a dry type air filter. Never apply oil to it. Service the air cleaner as follows:

Replace the element as indicated by the service indicator. (See Service Instructions and Installation Tips for Engine Air Filter.)

Service Instructions

Single- and Two-Stage Engine Air Cleaners

1 Remove the Filter

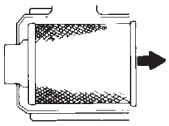

Rotate the filter while pulling straight out.

Unfasten or unlatch the service cover. Because the filter fits tightly over the outlet tube to create the critical seal, there will be some initial resistance, similar to breaking the seal on a jar. Gently move the end of the filter back and forth to break the seal then rotate while pulling straight out. Avoid knocking the filter against the housing.

If your air cleaner has a safety filter, replace it every third primary filter change. Remove the safety filter as you would the primary filter. Make sure you cover the air cleaner outlet tube to avoid any unfiltered contaminant dropping into the engine.

2 Clean Both Surfaces of the Outlet Tube and Check the Vacuator™ Valve

Use a clean cloth to wipe the filter sealing surface and the inside of the outlet tube. Contaminant on the sealing surface could hinder an effective seal and cause leakage. Make sure that all contaminant is removed before the new filter is inserted. Dirt accidently transferred to the inside of the outlet tube will reach the engine and cause wear. Engine manufacturers say that it takes only a few grams of dirt to "dust" an engine! Be careful not to damage the sealing area on the tube.

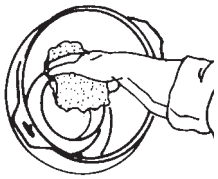

Outer edge of the outlet tube

Wipe both sides of the outlet tube clean.

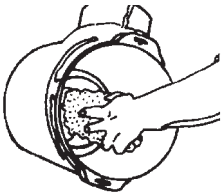

Inner edge of the outlet tube

If your air cleaner is equipped with a Vacuator Valve
Visually check and physically squeeze to make sure the valve is flexible and not inverted, damaged or plugged.

3 Inspect the Old Filter for Leak Clues

Visually inspect the old filter for any signs of leaks. A streak of dust on the clean side of the filter is a telltale sign. Remove any cause of leaks before installing new filter.

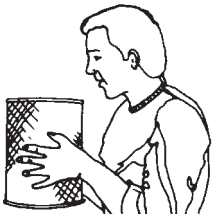

4 Inspect the New Filter for Damage

Inspect the new filter carefully, paying attention to the inside of the open end, which is the sealing area. NEVER install a damaged filter. A new Donaldson radial seal filter may have a dry lubricant on the seal to aid installation.

5 Insert the New Radial Seal Filter Properly

If you're servicing the safety filter, this should be seated into position before installing the primary filter.

Insert the new filter carefully. Seat the filter by hand, making certain it is completely into the air cleaner housing before securing the cover in place.

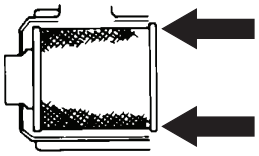

The critical sealing area will stretch slightly, adjust itself and distribute the sealing pressure evenly. To complete a tight seal, apply pressure by hand at the outer rim of the filter, not the flexible center. (Avoid pushing on the center of the urethane end cap.) No cover pressure is required to hold the seal. NEVER use the service cover to push the filter into place! Using the cover to push the filter in could cause damage to the housing, cover fasteners and will void the warranty.

If the service cover hits the filter before it is fully in place, remove the cover and push the filter (by hand) further into the air cleaner and try again. The cover should go on with no extra force.

Once the filter is in place, secure the service cover.

Caution

NEVER use the service cover to push the filter into place! Using the cover to push the filter in could cause damage to the housing, cover fasteners and will void the warranty.

6 Check Connectors for Tight Fit

Make sure that all mounting bands, clamps, bolts, and connections in the entire air cleaner system are tight. Check for holes in piping and repair if needed. Any leaks in your intake piping will send dust directly to the engine!

FUEL FILTERS

⚠ WARNING

When working on the fuel system:

- **Keep naked lights away, do not smoke!**
- **Do not spill fuel!**

The Dual Maverick® 450 is equipped with a Fuel Filter located to left of air cleaner.The procedure for changing the filter is as follows.

1. Close the fuel shutoff valve.
2. Clean the area around the fuel filter head. Remove the filter. Clean the gasket surface of the filter head and replace the o-ring.
3. Fill the clean filter with clean fuel, and lubricate the o-ring seal with clean lubricating oil.
4. Install the filter as specified by the filter manufacturer.

⚠ WARNING

Mechanical overtightening will distort the threads, filter element seal or filter can.

COOLING SYSTEM

The Dual Maverick® 450 is equipped with a pressure radiator. Keep the radiator cap tight to prevent loss of coolant. Clean and flush the coolant system periodically to prevent clogging the passage and over-heating the engine. When antifreeze is needed, always use the permanent type.

- Every 500 hours check radiator to ensure there is no fin blockage or leaks. Clean as necessary with an environmentally friendly degreaser and low pressure water.
- When draining the entire contents of the system, remove radiator cap. Pull drain hose through the battery access door in the base and open shut off valve until system is empty.
- When refilling, close shut off valve on drain hose.

NAMEPLATES / WARNING DECALS MAINTENANCE

Whenever routine maintenance is performed on this machine - or at least yearly - inspect all nameplates and labels for legibility. Replace those which are no longer clear. Refer to the parts list for the replacement item number.

WELDER / GENERATOR MAINTENANCE

STORAGE

Store the Dual Maverick® 450 in clean, dry, protected areas.

CLEANING

Blow out the generator and controls periodically with low pressure air. Do this at least once a week in particularly dirty areas.

FAN BELT CHANGE

Ensure when changing the fan belt a Lincoln recommended fan belt is used or equivalent EPDM material, 762 mm datum length and XPZ profile(Width 10, Height 8 mm, Cogged) belt is used. Tension new belts to 120lbs, used belts to 80lbs, using a Burroughs guage. Refer to engine operator's manual for proper installation and tension.

OIL CHANGE

Remove battery cover (see below) and route oil drain hose through opening to change engine oil.

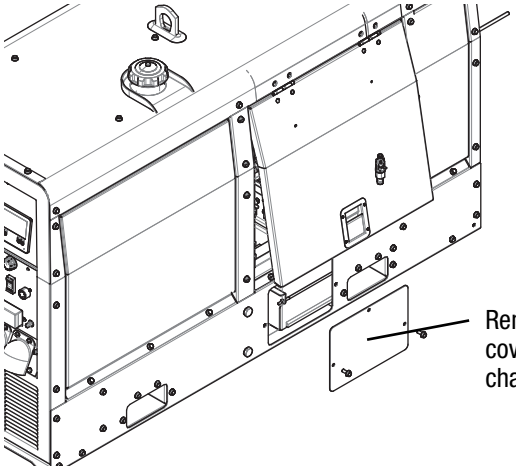

BATTERY HANDLING

⚠ WARNING

GASES FROM BATTERY can explode.

Keep sparks, flame and cigarettes away from battery.

To prevent EXPLOSION when:

- **INSTALLING A NEW BATTERY - disconnect negative cable from old battery first and connect to new battery last.**
- **CONNECTING A BATTERY CHARGER - Remove battery from welder by disconnecting negative cable first, then positive cable and battery clamp. When reinstalling, connect negative cable last. Keep well ventilated.**
- **USING A BOOSTER - connect positive lead to battery first then connect negative lead to engine foot.**

BATTERY ACID CAN BURN EYES AND SKIN.

- **Wear gloves and eye protection and be careful when working near battery. Follow instructions printed on battery.**

PREVENTING ELECTRICAL DAMAGE

1. When replacing, jumping, or otherwise connecting the battery to the battery cables, the proper polarity must be observed. Failure to observe the proper polarity could result in damage to the charging circuit. The positive (+) battery cable has a red terminal cover.
2. If the battery requires charging from an external charger, disconnect the negative battery cable first and then the positive battery cable before attaching the charger leads. Failure to do so can result in damage to the internal charger components. When reconnecting the cables, connect the positive cable first and the negative cable last.

PREVENTING BATTERY DISCHARGE

Turn the RUN/STOP switch to stop when engine is not running.

PREVENTING BATTERY BUCKLING

Tighten nuts on battery clamp until snug.

CHARGING THE BATTERY

When you charge, jump, replace, or otherwise connect battery cables to the battery, be sure the polarity is correct. Improper polarity can damage the charging circuit. The Dual Maverick® 450 positive (+) battery terminal has a red terminal cover.

If you need to charge the battery with an external charger, disconnect the negative cable first, then the positive cable before you attach the charger leads.

After the battery is charged, reconnect the positive battery cable first and the negative cable last. Failure to do so can result in damage to the internal charger components.

Follow the instructions of the battery charger manufacturer for proper charger settings and charging time.

TROUBLESHOOTING

How to Use Troubleshooting Guide

⚠ WARNING

Service and Repair should only be performed by Lincoln Electric Factory Trained Personnel. Unauthorized repairs performed on this equipment may result in danger to the technician and machine operator and will invalidate your factory warranty. For your safety and to avoid Electrical Shock, please observe all safety notes and precautions detailed throughout this manual.

This Troubleshooting Guide is provided to help you locate and repair possible machine malfunctions. Simply follow the three-step procedure listed below.

Step 1. LOCATE PROBLEM (SYMPTOM).

Look under the column labeled "PROBLEM (SYMPTOMS)." This column describes possible symptoms that the machine may exhibit. Find the listing that best describes the symptom that the machine is exhibiting.

Step 2. POSSIBLE CAUSE.

The second column labeled "POSSIBLE CAUSE" lists the obvious external possibilities that may contribute to the machine symptom.

Step 3. RECOMMENDED COURSE OF ACTION

This column provides a course of action for the Possible Cause, generally it states to contact your local Lincoln Authorized Field Service Facility.

If you do not understand or are unable to perform the Recommended Course of Action safely, contact your local Lincoln Authorized Field Service Facility.

⚠ WARNING

ELECTRIC SHOCK can kill.

- **Turn off machine at the disconnect switch on the rear of the machine and remove main power supply connections before doing any troubleshooting.**

If for any reason you do not understand the test procedures or are unable to perform the tests/repairs safely, contact your Lincoln Authorized Service Facility for technical troubleshooting assistance before you proceed.

WWW.LINCOLNELECTRIC.COM/LOCATOR

Observe all Safety Guidelines detailed throughout this manual

PROBLEMS (SYMPTOMS)	POSSIBLE CAUSE	RECOMMENDED COURSE OF ACTION
AUXILIARY OUTPUT		
No auxiliary power	1. Check that the circuit breakers did not trip.	If all recommended possible areas of misadjustment have been checked and the problem persists, Contact your local Lincoln Authorized Field Service Facility.
	2. Check that the RCD has not reset.	
	3. Inspect AVR 5 AMP fuse did not blow.	
	4. Faulty Field Relay(CR3) located under the right control PC board.	
ENGINE		
Engine will not crank	1. Low or weak battery.	If all recommended possible areas of misadjustment have been checked and the problem persists, Contact your local Lincoln Authorized Field Service Facility.
	2. Inspect for loose or corroded battery terminals.	
	3. “Battery circuit” circuit breaker (CB4) has tripped. Located on upper control panel beside E-stop button.	
	4. Faulty starter motor	
	5. Check starter relay(CR2). Located on left hand side of fuel tank shield below ECU.	
	6. E-stop is engaged	
Engine will crank but not start	1. Out of fuel.	
	2. Enter correct security PIN if the PIN function is enabled.	
	3. Fuel pump not working	
	4. Water separator valve closed.	
Engine shuts down shortly after starting	1. Low fuel level.	
	2. Low oil level.	
	3. Clogged fuel filter. Clean.	
	4. Faulty oil pressure switch.	
Engine has low output or	1. Low fuel	
	2. Clogged fuel filter	
	3. Clogged air filter	
	4. Poor quality fuel – fuel has sat for a long time.	
Engine will not go to low idle	1. Idler switch is in the High Idle position.	
	2. Aux load might be on	
	3. Faulty PC board.	
Engine does not go to full power when using auxiliary power.	1. The auxiliary power load is less than 100 Watts. Set the STOP/AUTO/HIGH IDLE switch to HIGH IDLE.	
	2. Disconnect / turn off auxiliary power loads before starting the engine.	

If for any reason you do not understand the test procedures or are unable to perform the tests/repairs safely, contact your Lincoln Authorized Service Facility for technical troubleshooting assistance before you proceed.

WWW.LINCOLNELECTRIC.COM/LOCATOR

PROBLEMS (SYMPTOMS)	POSSIBLE CAUSE	RECOMMENDED COURSE OF ACTION
WELDING		
No weld output	1. Verify the weld output is ON. A green icon with "Output ON" appears in the upper right corner of screen whenever weld output is ON.	If all recommended possible areas of misadjustment have been checked and the problem persists, Contact your local Lincoln Authorized Field Service Facility.
	2. Verify the work connection is tight and attached clean base metal.	
	3. If in CV mode check that "CV TRIGGER OVERRIDE" is not set to "REMOTE".	
	4. Faulty Field Relay(CR3). Located under the right control pc board.	
	5. Faulty PC board	
No output control – at the front panel	1. Verify the remote control is not turned on. "Remote ON" appears on the bottom left of the screen whenever the remote is turned on.	
	2. Faulty encoder, replace.	
No output control – with remote	1. Verify the remote control is not turned on. "Remote ON" appears on the bottom left of the screen whenever the remote is turned on.	
	2. Verify the remote control is turned on. "Remote ON" appears on the display screen.	
Output control range is limited while using a remote.	1. While in the weld mode, go to the remote screen and change the scaling of the remote.	
The arc is not stable.	1. Verify the polarity of the electrode and work cables.	
	2. Cables may be excessively long, undersized or damaged.	
	3. Verify the weld settings match the electrode. Use Ready-Set-Weld, menu for guidance.	
VRD (Volts < 30) not showing on the display	1. Ensure VRD ON/OFF switch on the PCB is switched to the "RIGHT" to turn VRD "ON".	
	2. Faulty 250 ohm resistor (R2 / R1) for loose wire connection.	
	3. Faulty PC board.	
Operator Selector Switch (SINGLE / DUAL) is not functioning properly	1. Micro switch inside of polarity switch is bad.	
	2. Loose wire connection from micro switch in polarity switch to right side control PC board.	
	3. Faulty polarity switch.	
Wire Feeder does not work when control cable is connected to 14 pin connector.	1. Wire Feeder circuit breaker open. Check (42V) breaker and reset if tripped.	
	2. Faulty control cable. Repair or replace cable.	
	3. Faulty wire feeder. Replace wire feeder.	

If for any reason you do not understand the test procedures or are unable to perform the tests/repairs safely, contact your Lincoln Authorized Service Facility for technical troubleshooting assistance before you proceed.

WWW.LINCOLNELECTRIC.COM/LOCATOR

ENGINE FAULT FLASH CODES ON ECG

FLASH CODE NUMBER	FAULT	WILL ENGINE SHUTDOWN?	CORRECTIVE ACTION
1	Unit not calibrated	Yes	ECM requires calibration
2	Excessive engine speed	Yes	Check over-speed parameter setting Check electrical interference Check wiring and connectors Check ECM ground connections Check actuator connections and fitment
3	Engine speed unusually low	Yes	Check parameter settings Check actuator connections and fitment Check machine loading upon engine
4	Engine protection input triggered	Yes	Check parameter settings Check Engine protection inputs Check engine protection run time setinq
5	Factory calibration lost	Yes	Reload calibration file Contact distributor
6	Analogue sensor input out of range	No	Check throttle wiring Recalibrate/Reset throttle settings.
7	Throttle position / IVS signal mis-match	No - may restrict acceleration	Verify wiring on throttle and IVS Check throttle and IVS parameters Check throttle configuration
8	ECM failure	Yes	Check wiring, shielding and ECM connections. Cycle ignition key. Check electrical interference. Consult distributor.
9	Excessive actuator current limiting	No	Check actuator wiring Check actuator fitment Check parameter settings
10	No engine speed signal	Yes - non start	Check speed pick up fitment Check speed pick up wiring Check electrical interference on pick up sensor and wiring. Check contamination on sensor
11	Autocrank detects engine non start	No	Check wiring and settings. Check engine mechanicals
12	Excessive current draw on Auxiliary output	No	Check wiring to output Check current draw of lamp, relay etc.
13	Excessive current draw on Auxiliary2 output	No	Check wiring to output Check current draw of lamp, relay etc.
14	Actuator disconnected or open circuit	Yes	Check actuator wiring and fitment Check electrical interference Check actuator resistance (less than 10 ohms)

If for any reason you do not understand the test procedures or are unable to perform the tests/repairs safely, contact your Lincoln Authorized Service Facility for technical troubleshooting assistance before you proceed.

WWW.LINCOLNELECTRIC.COM/LOCATOR

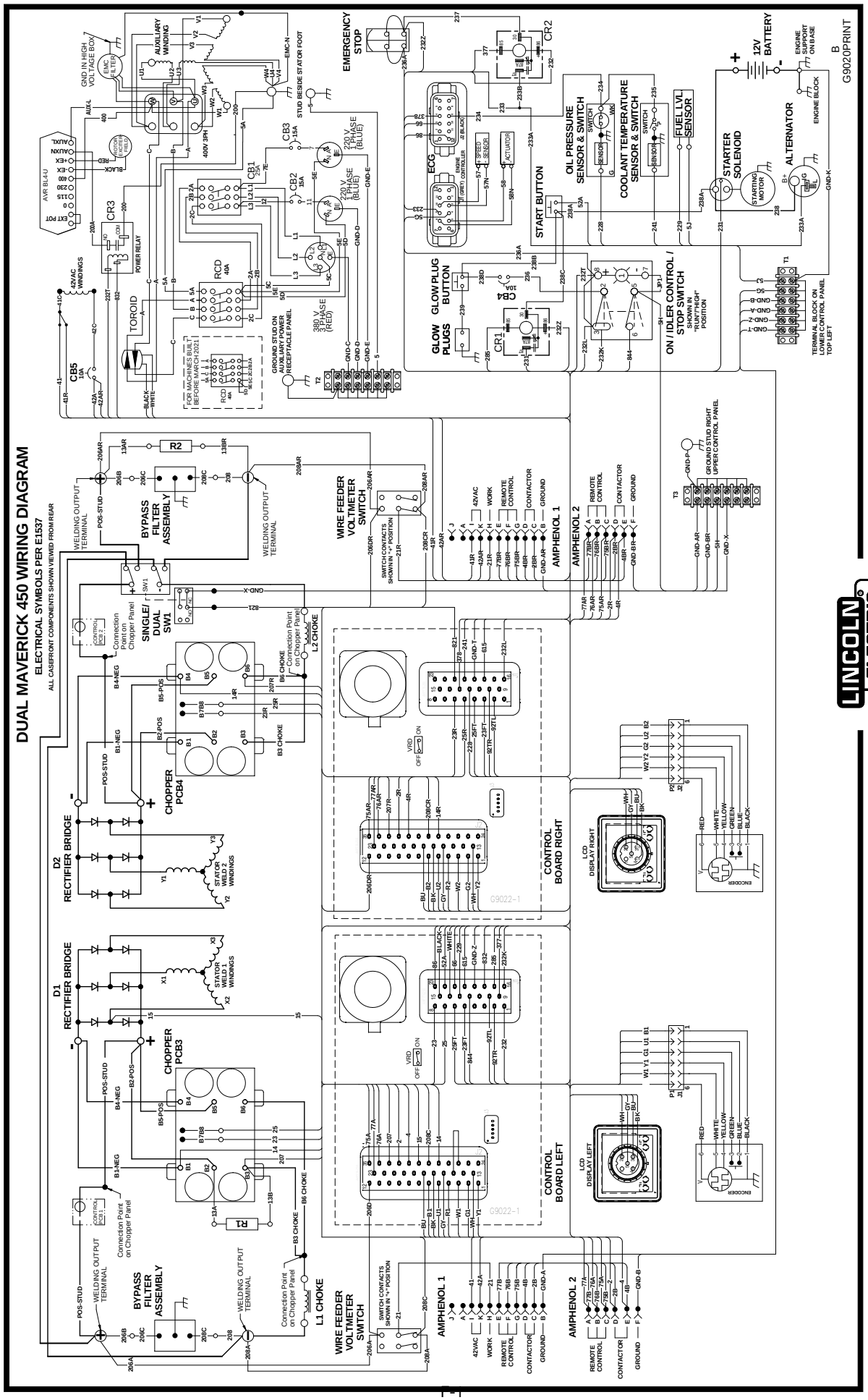

NOTE: This diagram is for reference only. It may not be accurate for all machines covered by this manual. The specific diagram for a particular code is included with the machine. If the diagram is illegible, write to the Service Department for a replacement. Give the equipment code number.

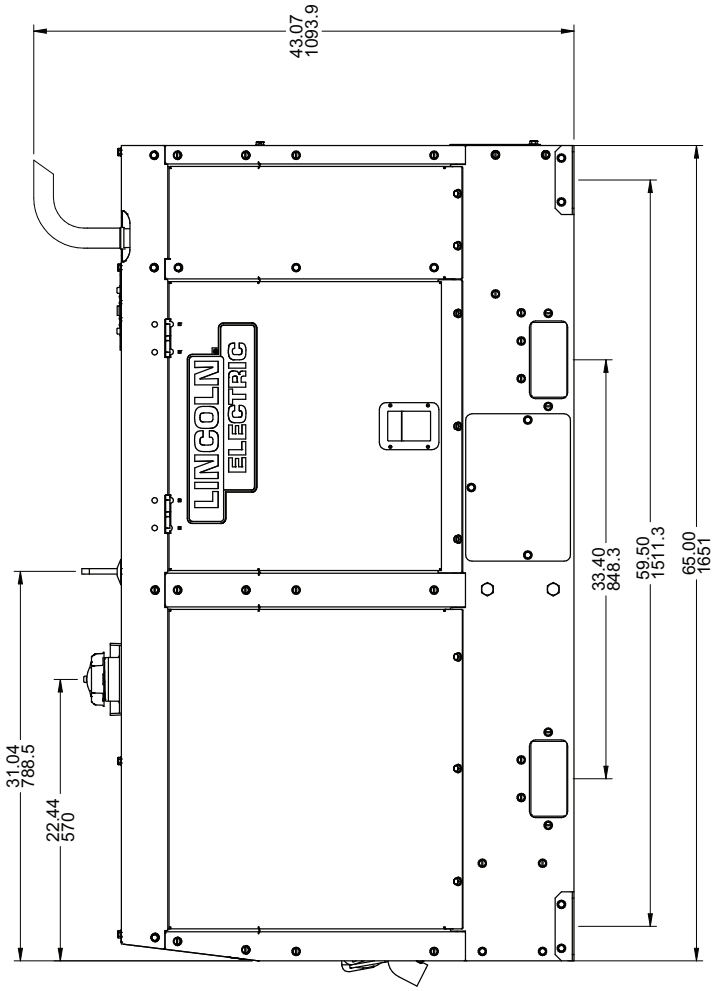
43.07
1093.9
LINCOLN
ELECTRIC
31.04
788.5
22.44
570
33.40
848.3
59.50
1511.3
65.00
1651

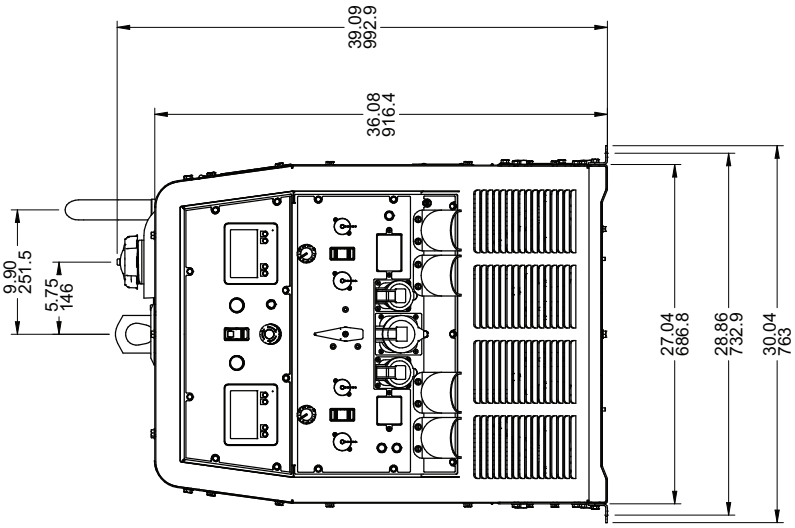
39.09
992.9
36.08
916.4
9.90
251.5
5.75
146
27.04
686.8
28.86
732.9
30.04
763

WARNING	● Do not touch electrically live parts or electrode with skin or wet clothing. ● Insulate yourself from work and ground.	● Keep flammable materials away.	● Wear eye, ear and body protection.
Spanish **AVISO DE PRECAUCION**	● No toque las partes o los electrodos bajo carga con la piel o ropa mojada. ● Aislese del trabajo y de la tierra.	● Mantenga el material combustible fuera del área de trabajo.	● Protéjase los ojos, los oídos y el cuerpo.
French **ATTENTION**	● Ne laissez ni la peau ni des vêtements mouillés entrer en contact avec des pièces sous tension. ● Isolez-vous du travail et de la terre.	● Gardez à l'écart de tout matériel inflammable.	● Protégez vos yeux, vos oreilles et votre corps.
German **WARNUNG**	● Berühren Sie keine stromführenden Teile oder Elektroden mit Ihrem Körper oder feuchter Kleidung! ● Isolieren Sie sich von den Elektroden und dem Erdboden!	● Entfernen Sie brennbarres Material!	● Tragen Sie Augen-, Ohren- und Körperschutz!
Portuguese **ATENÇÃO**	● Não toque partes elétricas e electrodos com a pele ou roupa molhada. ● Isole-se da peça e terra.	● Mantenha inflamáveis bem guardados.	● Use proteção para a vista, ouvido e corpo.
Japanese **注意事項**	● 通電中の電気部品、又は溶材にヒフやぬれた布で触れないこと。 ● 施工物やアースから身体が絶縁されている様にして下さい。	● 燃えやすいものの側での溶接作業は絶対にしてはなりません。	● 目、耳及び身体に保護具をして下さい。
Chinese **警 告**	● 皮肤或濕衣物切勿接觸帶電部件及銲條。 ● 使你自己與地面和工件絶緣。	● 把一切易燃物品移離工作場所。	● 佩戴眼、耳及身體勞動保護用具。
Korean **위 험**	● 전도체나 용접봉을 젖은 헝겁 또는 피부로 절대 접촉치 마십시요. ● 모재와 접지를 접촉치 마십시요.	● 인화성 물질을 접근 시키지 마시요.	● 눈, 귀와 몸에 보호장구를 착용하십시요.
Arabic **تحذير**	● لا تلمس الاجزاء التي يسري فيها التيار الكهربائي أو الالكترود بجلد الجسم أو بالملابس المبللة بالماء. ● ضع عازلا على جسمك خلال العمل.	● ضع المواد القابلة للاشتعال في مكان بعيد.	● ضع أدوات وملابس واقية على عينيك وأذنيك وجسمك.

READ AND UNDERSTAND THE MANUFACTURER'S INSTRUCTION FOR THIS EQUIPMENT AND THE CONSUMABLES TO BE USED AND FOLLOW YOUR EMPLOYER'S SAFETY PRACTICES.

SE RECOMIENDA LEER Y ENTENDER LAS INSTRUCCIONES DEL FABRICANTE PARA EL USO DE ESTE EQUIPO Y LOS CONSUMIBLES QUE VA A UTILIZAR, SIGA LAS MEDIDAS DE SEGURIDAD DE SU SUPERVISOR.

LISEZ ET COMPRENEZ LES INSTRUCTIONS DU FABRICANT EN CE QUI REGARDE CET EQUIPMENT ET LES PRODUITS A ETRE EMPLOYES ET SUIVEZ LES PROCEDURES DE SECURITE DE VOTRE EMPLOYEUR.

LESEN SIE UND BEFOLGEN SIE DIE BETRIEBSANLEITUNG DER ANLAGE UND DEN ELEKTRODENEINSATZ DES HERSTELLERS. DIE UNFALLVERHÜTUNGSVORSCHRIFTEN DES ARBEITGEBERS SIND EBENFALLS ZU BEACHTEN.

● Keep your head out of fumes. ● Use ventilation or exhaust to remove fumes from breathing zone.	● Turn power off before servicing.	● Do not operate with panel open or guards off.	**WARNING**
● Los humos fuera de la zona de respiración. ● Mantenga la cabeza fuera de los humos. Utilice ventilación o aspiración para gases.	● Desconectar el cable de alimentación de poder de la máquina antes de iniciar cualquier servicio.	● No operar con panel abierto o guardas quitadas.	Spanish **AVISO DE PRECAUCION**
● Gardez la tête à l'écart des fumées. ● Utilisez un ventilateur ou un aspirateur pour ôter les fumées des zones de travail.	● Débranchez le courant avant l'entretien.	● N'opérez pas avec les panneaux ouverts ou avec les dispositifs de protection enlevés.	French **ATTENTION**
● Vermeiden Sie das Einatmen von Schweibrauch! ● Sorgen Sie für gute Be- und Entlüftung des Arbeitsplatzes!	● Strom vor Wartungsarbeiten abschalten! (Netzstrom völlig öffnen; Maschine anhalten!)	● Anlage nie ohne Schutzgehäuse oder Innenschutzverkleidung in Betrieb setzen!	German **WARNUNG**
● Mantenha seu rosto da fumaça. ● Use ventilação e exhaustão para remover fumo da zona respiratória.	● Não opere com as tampas removidas. ● Desligue a corrente antes de fazer serviço. ● Não toque as partes elétricas nuas.	● Mantenha-se afastado das partes moventes. ● Não opere com os paineis abertos ou guardas removidas.	Portuguese **ATENÇÃO**
● ヒュームから頭を離すようにして下さい。 ● 換気や排煙に十分留意して下さい。	● メンテナンス・サービスに取りかかる際には、まず電源スイッチを必ず切って下さい。	● パネルやカバーを取り外したままで機械操作をしないで下さい。	Japanese **注意事項**
● 頭部遠離煙霧。 ● 在呼吸區使用通風或排風器除煙。	● 維修前切斷電源。	● 儀表板打開或沒有安全罩時不準作業。	Chinese **警 告**
● 얼굴로부터 용접가스를 멀리하십시요. ● 호흡지역으로부터 용접가스를 제거하기 위해 가스제거기나 통풍기를 사용하십시요.	● 보수전에 전원을 차단하십시요.	● 판넬이 열린 상태로 작동치 마십시요.	Korean **위 험**
● ابعد رأسك بعيداً عن الدخان. ● استعمل التهوية أو جهاز ضغط الدخان للخارج لكي تبعد الدخان عن المنطقة التي تتنفس فيها.	● اقطع التيار الكهربائي قبل القيام بأية صيانة.	● لا تشغل هذا الجهاز اذا كانت الاغطية الحديدية الواقية ليست عليه.	Arabic **تحذير**

LEIA E COMPREENDA AS INSTRUÇÕES DO FABRICANTE PARA ESTE EQUIPAMENTO E AS PARTES DE USO, E SIGA AS PRÁTICAS DE SEGURANÇA DO EMPREGADOR.

使う機械や溶材のメーカーの指示書をよく読み、まず理解して下さい。そして貴社の安全規定に従って下さい。

請詳細閱讀並理解製造廠提供的説明以及應該使用的銀捍材料，並請遵守貴方的有関勞動保護規定。

이 제품에 동봉된 작업지침서를 숙지하시고 귀사의 작업자 안전수칙을 준수하시기 바랍니다.

اقرأ بتمعن وافهم تعليمات المصنع المنتج لهذه المعدات والمواد قبل استعمالها واتبع تعليمات الوقاية لصاحب العمل.

CUSTOMER ASSISTANCE POLICY

The business of The Lincoln Electric Company is manufacturing and selling high quality welding equipment, consumables, and cutting equipment. Our challenge is to meet the needs of our customers and to exceed their expectations. On occasion, purchasers may ask Lincoln Electric for advice or information about their use of our products. We respond to our customers based on the best information in our possession at that time. Lincoln Electric is not in a position to warrant or guarantee such advice, and assumes no liability, with respect to such information or advice. We expressly disclaim any warranty of any kind, including any warranty of fitness for any customer's particular purpose, with respect to such information or advice. As a matter of practical consideration, we also cannot assume any responsibility for updating or correcting any such information or advice once it has been given, nor does the provision of information or advice create, expand or alter any warranty with respect to the sale of our products.

Lincoln Electric is a responsive manufacturer, but the selection and use of specific products sold by Lincoln Electric is solely within the control of, and remains the sole responsibility of the customer. Many variables beyond the control of Lincoln Electric affect the results obtained in applying these types of fabrication methods and service requirements.

Subject to Change – This information is accurate to the best of our knowledge at the time of printing. Please refer to www.lincolnelectric.com for any updated information.

THE LINCOLN ELECTRIC COMPANY
22801 St. Clair Avenue • Cleveland, OH • 44117-1199 • U.S.A.
Phone: +1.216.481.8100 • www.lincolnelectric.com