Operator's Manual

DUAL VANTAGE® 800-I

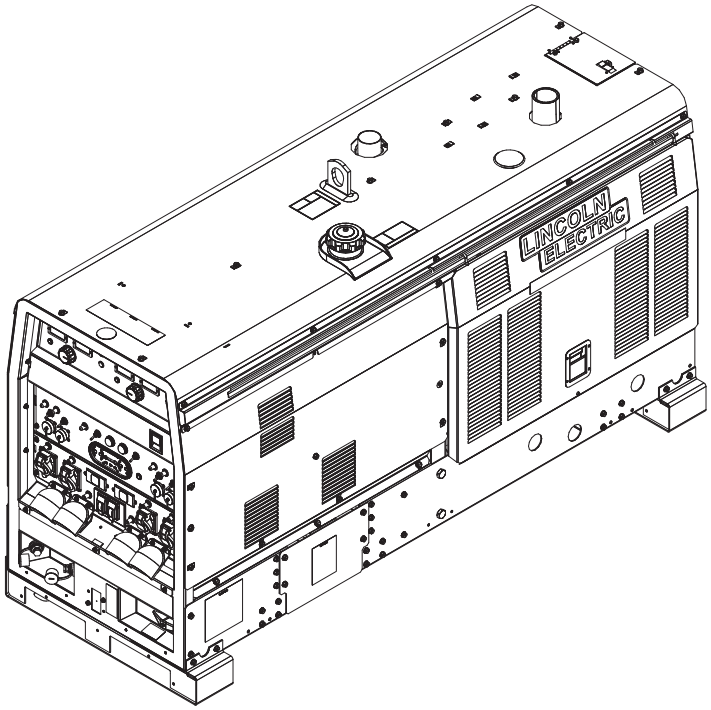

For use with machines having Code Numbers:

12581

GENUINE LINCOLN PARTS™

Register your machine:
www.lincolnelectric.com/register

Authorized Service and Distributor Locator:
www.lincolnelectric.com/locator

Save for future reference

Date Purchased

Code: (ex: 10859)

Serial: (ex: U1060512345)

Need Help? Call 1.888.935.3877
to talk to a Service Representative

Hours of Operation:
8:00 AM to 6:00 PM (ET) Mon. thru Fri.

After hours?
Use "Ask the Experts" at lincolnelectric.com
A Lincoln Service Representative will contact you no later than the following business day.

For Service outside the USA:
Email: globalservice@lincolnelectric.com

IM10354 | Issue Date Nov-17

© Lincoln Global, Inc. All Rights Reserved.

THE LINCOLN ELECTRIC COMPANY
22801 St. Clair Avenue • Cleveland, OH • 44117-1199 • U.S.A.
Phone: +1.216.481.8100 • www.lincolnelectric.com

THANK YOU FOR SELECTING A QUALITY PRODUCT BY LINCOLN ELECTRIC.

PLEASE EXAMINE CARTON AND EQUIPMENT FOR DAMAGE IMMEDIATELY

When this equipment is shipped, title passes to the purchaser upon receipt by the carrier. Consequently, claims for material damaged in shipment must be made by the purchaser against the transportation company at the time the shipment is received.

SAFETY DEPENDS ON YOU

Lincoln arc welding and cutting equipment is designed and built with safety in mind. However, your overall safety can be increased by proper installation ... and thoughtful operation on your part. **DO NOT INSTALL, OPERATE OR REPAIR THIS EQUIPMENT WITHOUT READING THIS MANUAL AND THE SAFETY PRECAUTIONS CONTAINED THROUGHOUT.** And, most importantly, think before you act and be careful.

⚠ WARNING

This statement appears where the information must be followed exactly to avoid serious personal injury or loss of life.

⚠ CAUTION

This statement appears where the information must be followed to avoid minor personal injury or damage to this equipment.

KEEP YOUR HEAD OUT OF THE FUMES.

DON'T get too close to the arc. Use corrective lenses if necessary to stay a reasonable distance away from the arc.

READ and obey the Safety Data Sheet (SDS) and the warning label that appears on all containers of welding materials.

USE ENOUGH VENTILATION or exhaust at the arc, or both, to keep the fumes and gases from your breathing zone and the general area.

IN A LARGE ROOM OR OUTDOORS, natural ventilation may be adequate if you keep your head out of the fumes (See below).

USE NATURAL DRAFTS or fans to keep the fumes away from your face.

If you develop unusual symptoms, see your supervisor. Perhaps the welding atmosphere and ventilation system should be checked.

WEAR CORRECT EYE, EAR & BODY PROTECTION

PROTECT your eyes and face with welding helmet properly fitted and with proper grade of filter plate (See ANSI Z49.1).

PROTECT your body from welding spatter and arc flash with protective clothing including woolen clothing, flame-proof apron and gloves, leather leggings, and high boots.

PROTECT others from splatter, flash, and glare with protective screens or barriers.

IN SOME AREAS, protection from noise may be appropriate.

BE SURE protective equipment is in good condition.

Also, wear safety glasses in work area **AT ALL TIMES.**

SPECIAL SITUATIONS

DO NOT WELD OR CUT containers or materials which previously had been in contact with hazardous substances unless they are properly cleaned. This is extremely dangerous.

DO NOT WELD OR CUT painted or plated parts unless special precautions with ventilation have been taken. They can release highly toxic fumes or gases.

Additional precautionary measures

PROTECT compressed gas cylinders from excessive heat, mechanical shocks, and arcs; fasten cylinders so they cannot fall.

BE SURE cylinders are never grounded or part of an electrical circuit.

REMOVE all potential fire hazards from welding area.

ALWAYS HAVE FIRE FIGHTING EQUIPMENT READY FOR IMMEDIATE USE AND KNOW HOW TO USE IT.

SECTION A: WARNINGS

CALIFORNIA PROPOSITION 65 WARNINGS

WARNING: Breathing diesel engine exhaust exposes you to chemicals known to the State of California to cause cancer and birth defects, or other reproductive harm.

- Always start and operate the engine in a well-ventilated area.
- If in an exposed area, vent the exhaust to the outside.
- Do not modify or tamper with the exhaust system.
- Do not idle the engine except as necessary.

For more information go to www.P65 warnings.ca.gov/diesel

WARNING: This product, when used for welding or cutting, produces fumes or gases which contain chemicals known to the State of California to cause birth defects and, in some cases, cancer. (California Health & Safety Code § 25249.5 *et seq.)*

WARNING: Cancer and Reproductive Harm www.P65warnings.ca.gov

ARC WELDING CAN BE HAZARDOUS. PROTECT YOURSELF AND OTHERS FROM POSSIBLE SERIOUS INJURY OR DEATH. KEEP CHILDREN AWAY. PACEMAKER WEARERS SHOULD CONSULT WITH THEIR DOCTOR BEFORE OPERATING.

Read and understand the following safety highlights. For additional safety information, it is strongly recommended that you purchase a copy of "Safety in Welding & Cutting - ANSI Standard Z49.1" from the American Welding Society, P.O. Box 351040, Miami, Florida 33135 or CSA Standard W117.2-1974. A Free copy of "Arc Welding Safety" booklet E205 is available from the Lincoln Electric Company, 22801 St. Clair Avenue, Cleveland, Ohio 44117-1199.

BE SURE THAT ALL INSTALLATION, OPERATION, MAINTENANCE AND REPAIR PROCEDURES ARE PERFORMED ONLY BY QUALIFIED INDIVIDUALS.

FOR ENGINE POWERED EQUIPMENT.

1.a. Turn the engine off before troubleshooting and maintenance work unless the maintenance work requires it to be running.

1.b. Operate engines in open, well-ventilated areas or vent the engine exhaust fumes outdoors.

1.c. Do not add the fuel near an open flame welding arc or when the engine is running. Stop the engine and allow it to cool before refueling to prevent spilled fuel from vaporizing on contact with hot engine parts and igniting. Do not spill fuel when filling tank. If fuel is spilled, wipe it up and do not start engine until fumes have been eliminated.

1.d. Keep all equipment safety guards, covers and devices in position and in good repair. Keep hands, hair, clothing and tools away from V-belts, gears, fans and all other moving parts when starting, operating or repairing equipment.

1.e. In some cases it may be necessary to remove safety guards to perform required maintenance. Remove guards only when necessary and replace them when the maintenance requiring their removal is complete. Always use the greatest care when working near moving parts.

1.f. Do not put your hands near the engine fan. Do not attempt to override the governor or idler by pushing on the throttle control rods while the engine is running.

1.g. To prevent accidentally starting gasoline engines while turning the engine or welding generator during maintenance work, disconnect the spark plug wires, distributor cap or magneto wire as appropriate.

1.h. To avoid scalding, do not remove the radiator pressure cap when the engine is hot.

ELECTRIC AND MAGNETIC FIELDS MAY BE DANGEROUS

2.a. Electric current flowing through any conductor causes localized Electric and Magnetic Fields (EMF). Welding current creates EMF fields around welding cables and welding machines

2.b. EMF fields may interfere with some pacemakers, and welders having a pacemaker should consult their physician before welding.

2.c. Exposure to EMF fields in welding may have other health effects which are now not known.

2.d. All welders should use the following procedures in order to minimize exposure to EMF fields from the welding circuit:

2.d.1. Route the electrode and work cables together - Secure them with tape when possible.

2.d.2. Never coil the electrode lead around your body.

2.d.3. Do not place your body between the electrode and work cables. If the electrode cable is on your right side, the work cable should also be on your right side.

2.d.4. Connect the work cable to the workpiece as close as possible to the area being welded.

2.d.5. Do not work next to welding power source.

ELECTRIC SHOCK CAN KILL.

3.a. The electrode and work (or ground) circuits are electrically "hot" when the welder is on. Do not touch these "hot" parts with your bare skin or wet clothing. Wear dry, hole-free gloves to insulate hands.

3.b. Insulate yourself from work and ground using dry insulation. Make certain the insulation is large enough to cover your full area of physical contact with work and ground.

In addition to the normal safety precautions, if welding must be performed under electrically hazardous conditions (in damp locations or while wearing wet clothing; on metal structures such as floors, gratings or scaffolds; when in cramped positions such as sitting, kneeling or lying, if there is a high risk of unavoidable or accidental contact with the workpiece or ground) use the following equipment:

- Semiautomatic DC Constant Voltage (Wire) Welder.
- DC Manual (Stick) Welder.
- AC Welder with Reduced Voltage Control.

3.c. In semiautomatic or automatic wire welding, the electrode, electrode reel, welding head, nozzle or semiautomatic welding gun are also electrically "hot".

3.d. Always be sure the work cable makes a good electrical connection with the metal being welded. The connection should be as close as possible to the area being welded.

3.e. Ground the work or metal to be welded to a good electrical (earth) ground.

3.f. Maintain the electrode holder, work clamp, welding cable and welding machine in good, safe operating condition. Replace damaged insulation.

3.g. Never dip the electrode in water for cooling.

3.h. Never simultaneously touch electrically "hot" parts of electrode holders connected to two welders because voltage between the two can be the total of the open circuit voltage of both welders.

3.i. When working above floor level, use a safety belt to protect yourself from a fall should you get a shock.

3.j. Also see Items 6.c. and 8.

ARC RAYS CAN BURN.

4.a. Use a shield with the proper filter and cover plates to protect your eyes from sparks and the rays of the arc when welding or observing open arc welding. Headshield and filter lens should conform to ANSI Z87. I standards.

4.b. Use suitable clothing made from durable flame-resistant material to protect your skin and that of your helpers from the arc rays.

4.c. Protect other nearby personnel with suitable, non-flammable screening and/or warn them not to watch the arc nor expose themselves to the arc rays or to hot spatter or metal.

FUMES AND GASES CAN BE DANGEROUS.

5.a. Welding may produce fumes and gases hazardous to health. Avoid breathing these fumes and gases. When welding, keep your head out of the fume. Use enough ventilation and/or exhaust at the arc to keep fumes and gases away from the breathing zone. **When welding hardfacing (see instructions on container or SDS) or on lead or cadmium plated steel and other metals or coatings which produce highly toxic fumes, keep exposure as low as possible and within applicable OSHA PEL and ACGIH TLV limits using local exhaust or mechanical ventilation unless exposure assessments indicate otherwise. In confined spaces or in some circumstances, outdoors, a respirator may also be required. Additional precautions are also required when welding on galvanized steel.**

5. b. The operation of welding fume control equipment is affected by various factors including proper use and positioning of the equipment, maintenance of the equipment and the specific welding procedure and application involved. Worker exposure level should be checked upon installation and periodically thereafter to be certain it is within applicable OSHA PEL and ACGIH TLV limits.

5.c. Do not weld in locations near chlorinated hydrocarbon vapors coming from degreasing, cleaning or spraying operations. The heat and rays of the arc can react with solvent vapors to form phosgene, a highly toxic gas, and other irritating products.

5.d. Shielding gases used for arc welding can displace air and cause injury or death. Always use enough ventilation, especially in confined areas, to insure breathing air is safe.

5.e. Read and understand the manufacturer's instructions for this equipment and the consumables to be used, including the Safety Data Sheet (SDS) and follow your employer's safety practices. SDS forms are available from your welding distributor or from the manufacturer.

5.f. Also see item 1.b.

WELDING AND CUTTING SPARKS CAN CAUSE FIRE OR EXPLOSION.

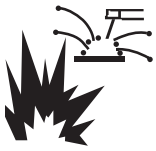

6.a. Remove fire hazards from the welding area. If this is not possible, cover them to prevent the welding sparks from starting a fire. Remember that welding sparks and hot materials from welding can easily go through small cracks and openings to adjacent areas. Avoid welding near hydraulic lines. Have a fire extinguisher readily available.

6.b. Where compressed gases are to be used at the job site, special precautions should be used to prevent hazardous situations. Refer to “Safety in Welding and Cutting” (ANSI Standard Z49.1) and the operating information for the equipment being used.

6.c. When not welding, make certain no part of the electrode circuit is touching the work or ground. Accidental contact can cause overheating and create a fire hazard.

6.d. Do not heat, cut or weld tanks, drums or containers until the proper steps have been taken to insure that such procedures will not cause flammable or toxic vapors from substances inside. They can cause an explosion even though they have been “cleaned”. For information, purchase “Recommended Safe Practices for the Preparation for Welding and Cutting of Containers and Piping That Have Held Hazardous Substances”, AWS F4.1 from the American Welding Society (see address above).

6.e. Vent hollow castings or containers before heating, cutting or welding. They may explode.

6.f. Sparks and spatter are thrown from the welding arc. Wear oil free protective garments such as leather gloves, heavy shirt, cuffless trousers, high shoes and a cap over your hair. Wear ear plugs when welding out of position or in confined places. Always wear safety glasses with side shields when in a welding area.

6.g. Connect the work cable to the work as close to the welding area as practical. Work cables connected to the building framework or other locations away from the welding area increase the possibility of the welding current passing through lifting chains, crane cables or other alternate circuits. This can create fire hazards or overheat lifting chains or cables until they fail.

6.h. Also see item 1.c.

6.I. Read and follow NFPA 51B “Standard for Fire Prevention During Welding, Cutting and Other Hot Work”, available from NFPA, 1 Batterymarch Park, PO box 9101, Quincy, MA 022690-9101.

6.j. Do not use a welding power source for pipe thawing.

CYLINDER MAY EXPLODE IF DAMAGED.

7.a. Use only compressed gas cylinders containing the correct shielding gas for the process used and properly operating regulators designed for the gas and pressure used. All hoses, fittings, etc. should be suitable for the application and maintained in good condition.

7.b. Always keep cylinders in an upright position securely chained to an undercarriage or fixed support.

7.c. Cylinders should be located:

- Away from areas where they may be struck or subjected to physical damage.
- A safe distance from arc welding or cutting operations and any other source of heat, sparks, or flame.

7.d. Never allow the electrode, electrode holder or any other electrically “hot” parts to touch a cylinder.

7.e. Keep your head and face away from the cylinder valve outlet when opening the cylinder valve.

7.f. Valve protection caps should always be in place and hand tight except when the cylinder is in use or connected for use.

7.g. Read and follow the instructions on compressed gas cylinders, associated equipment, and CGA publication P-I, “Precautions for Safe Handling of Compressed Gases in Cylinders,” available from the Compressed Gas Association, 14501 George Carter Way Chantilly, VA 20151.

FOR ELECTRICALLY POWERED EQUIPMENT.

8.a. Turn off input power using the disconnect switch at the fuse box before working on the equipment.

8.b. Install equipment in accordance with the U.S. National Electrical Code, all local codes and the manufacturer’s recommendations.

8.c. Ground the equipment in accordance with the U.S. National Electrical Code and the manufacturer’s recommendations.

Refer to http://www.lincolnelectric.com/safety for additional safety information.

Electromagnetic Compatibility (EMC)

Conformance
Products displaying the CE mark are in conformity with European Community Council Directive of 15 Dec 2004 on the approximation of the laws of the Member States relating to electromagnetic compatibility, 2004/108/EC. It was manufactured in conformity with a national standard that implements a harmonized standard: EN 60974-10 Electromagnetic Compatibility (EMC) Product Standard for Arc Welding Equipment. It is for use with other Lincoln Electric equipment. It is designed for industrial and professional use.

Introduction
All electrical equipment generates small amounts of electromagnetic emission. Electrical emission may be transmitted through power lines or radiated through space, similar to a radio transmitter. When emissions are received by other equipment, electrical interference may result. Electrical emissions may affect many kinds of electrical equipment; other nearby welding equipment, radio and TV reception, numerical controlled machines, telephone systems, computers, etc. Be aware that interference may result and extra precautions may be required when a welding power source is used in a domestic establishment.

Installation and Use
The user is responsible for installing and using the welding equipment according to the manufacturer's instructions. If electromagnetic disturbances are detected then it shall be the responsibility of the user of the welding equipment to resolve the situation with the technical assistance of the manufacturer. In some cases this remedial action may be as simple as earthing (grounding) the welding circuit, see Note. In other cases it could involve construction of an electromagnetic screen enclosing the power source and the work complete with associated input filters. In all cases electromagnetic disturbances must be reduced to the point where they are no longer troublesome.

Note: The welding circuit may or may not be earthed for safety reasons according to national codes. Changing the earthing arrangements should only be authorized by a person who is competent to access whether the changes will increase the risk of injury, e.g., by allowing parallel welding current return paths which may damage the earth circuits of other equipment.

Assessment of Area
Before installing welding equipment the user shall make an assessment of potential electromagnetic problems in the surrounding area. The following shall be taken into account:

a) other supply cables, control cables, signaling and telephone cables; above, below and adjacent to the welding equipment;

b) radio and television transmitters and receivers;

c) computer and other control equipment;

d) safety critical equipment, e.g., guarding of industrial equipment;

e) the health of the people around, e.g., the use of pacemakers and hearing aids;

f) equipment used for calibration or measurement

g) the immunity of other equipment in the environment. The user shall ensure that other equipment being used in the environment is compatible. This may require additional protection measures;

h) the time of day that welding or other activities are to be carried out.

Electromagnetic Compatibility (EMC)

The size of the surrounding area to be considered will depend on the structure of the building and other activities that are taking place. The surrounding area may extend beyond the boundaries of the premises.

Methods of Reducing Emissions

Mains Supply
Welding equipment should be connected to the mains supply according to the manufacturer's recommendations. If interference occurs, it may be necessary to take additional precautions such as filtering of the mains supply. Consideration should be given to shielding the supply cable of permanently installed welding equipment, in metallic conduit or equivalent. Shielding should be electrically continuous throughout its length. The shielding should be connected to the welding power source so that good electrical contact is maintained between the conduit and the welding power source enclosure.

Maintenance of the Welding Equipment
The welding equipment should be routinely maintained according to the manufacturer's recommendations. All access and service doors and covers should be closed and properly fastened when the welding equipment is in operation. The welding equipment should not be modified in any way except for those changes and adjustments covered in the manufacturers instructions. In particular, the spark gaps of arc striking and stabilizing devices should be adjusted and maintained according to the manufacturer's recommendations.

Welding Cables
The welding cables should be kept as short as possible and should be positioned close together, running at or close to floor level.

Equipotential Bonding
Bonding of all metallic components in the welding installation and adjacent to it should be considered. However, metallic components bonded to the work piece will increase the risk that the operator could receive a shock by touching these metallic components and the electrode at the same time. The operator should be insulated from all such bonded metallic components.

Earthing of the Workpiece
Where the workpiece is not bonded to earth for electrical safety, not connected to earth because of its size and position, e.g., ships hull or building steelwork, a connection bonding the workpiece to earth may reduce emissions in some, but not all instances. Care should be taken to prevent the earthing of the workpiece increasing the risk of injury to users, or damage to other electrical equipment. Where necessary, the connection of the workpiece to earth should be made by a direct connection to the workpiece, but in some countries where direct connection is not permitted, the bonding should be achieved by suitable capacitance, selected according to national regulations.

Screening and Shielding
Selective screening and shielding of other cables and equipment in the surrounding area may alleviate problems of interference. Screening of the entire welding installation may be considered for special applications[1].

---

[1] Portions of the preceding text are contained in EN 60974-10: "Electromagnetic Compatibility (EMC) product standard for arc welding equipment."

Page

Installation.....Section A
Technical Specifications.....A-1
Safety Precautions.....A-2
VRD (Voltage Reduction Device).....A-2
Location and Ventilation.....A-2
Storing.....A-2
Stacking.....A-3
Angle of Operation.....A-3
Lifting.....A-3
High Altitude Operation.....A-3
High Temperature Operation.....A-3
Towing.....A-3
Vehicle Mounting.....A-3
Pre-Operation Engine Service.....A-4
Oil.....A-4
Fuel and Fuel Cap.....A-4
Engine Coolant System.....A-4
Battery Connection.....A-4
Muffler Outlet Pipe.....A-5
Spark Arrestor.....A-5
Air Cleaner Inlet Hood.....A-5
Welding Terminals.....A-5
Welding Output Cables.....A-5
Machine Grounding.....A-5
Remote Control.....A-6
Auxiliary Power Receptacles.....A-6
Standby Power Connections.....A-6, A-7
Connection of Lincoln Electric Wire Feeders.....A-8, A-9
Connection of Wire Feeders With Control Cable (14 Pin).....A-8
Connection of Across the Arc Wire Feeders.....A-9
Electrical Device use with this Product.....A-10

Operation.....Section B
Safety Precautions.....B-1
General Description.....B-1
Auxiliary Power.....B-1
Engine Operation.....B-1
Add Fuel.....B-2
Hand Primer Button.....B-2
Recommended Applications.....B-2
Generator.....B-2
Welding Controls.....B-3 thru B-4
Engine Controls.....B-5
Engine Operation.....B-6
Welder Operation.....B-7 thru B-9
Constant Current (CC-Stick) Welding.....B-7
Downhill Pipe Welding.....B-7
TIG Welding.....B-8
Typical Current Ranges for Tungsten Electrodes.....B-8
Wire Welding-CV.....B-9
ARC Gouging.....B-9
Paralleling.....B-9
Auxiliary Power Operation.....B-10
Simultaneous Welding and Auxiliary Power Loads.....B-10
Extension Cord Length Recommendations.....B-10

Accessories.....Section C
Optional Field Installed Accessories.....C-1

Maintenance.....Section D
Safety Precautions..... D-1
Routine and Periodic Maintenance..... D-1
Engine Maintenance.....D-1
Air Filter.....D-1
Service Instructions for Engine Air Cleaner.....D-2
Fuel Filters..... D-3
Cooling System.....D-3
Battery Handling..... D-4
Charging the Battery..... D-4
Servicing Muffler with Internal Spark Arrester..... D-4
Nameplate / Warning Decal Maintenance.....D-5
Welder / Generator Maintenance..... D-5
Engine Maintenance Components..... D-5

Troubleshooting.....Section E
How to Use Troubleshooting Guide.....E-1
Troubleshooting Guide.....E-2 – E-4

Connection Diagrams, Wiring Diagrams and Dimension Print.....Section F

Parts List..... parts@lincolnelectric.com

Content/details may be changed or updated without notice. For most current Instruction Manuals, go to parts.lincolnelectric.com.

INSTALLATION

TECHNICAL SPECIFICATIONS - DUAL VANTAGE® 800-I (K3995-5) Code 12581

INPUT - DIESEL ENGINE					
Make/Model	**Description**	**Speed (RPM)**	**Displacement cu. in. (ltrs.)**	**Starting System**	**Dry Capacities**
Cummins® B3.3T	4 cylinder 69 HP (51.4kw) 1800 RPM Turbo Charged Diesel Engine	High Idle 1860 Full Load 1860 Low Idle 1500	199(3.3) Bore x Stroke inch (mm) 3.74 X 4.53 (95 x 115mm)	12VDC Battery & starter	Fuel: 25 gal. (94.6 L) Oil: 2 gal. (7.6L) Radiator Coolant: 4.0gal. (15.1L)

RATED OUTPUT @ 104°F(40°C) - WELDER					
SINGLE MODE			**DUAL MODE**		
Duty Cycle	**Welding Output**	**Volts at Rated Amps**	**Duty Cycle**	**Welding Output**	**Volts at Rated Amps**
100%	650 A	44 Volts	100%	300 A	32 Volts
100%	700 A	42 volts	100%	400 A CV	31 Volts
100%	800 A	36 volts	100%	400 A CC	34 Volts

OUTPUT @ 104° (40°C) – WELDER AND GENERATOR	
SINGLE MODE	**DUAL MODE**
Welding Range 30 – 800 Amps CC/CV 20 – 250 Amps TIG	**Welding Range** 30 – 400 Amps CC/CV 20 – 250 Amps TIG
Open Circuit Voltage 60 MAX OCV @ 1860 RPM	**Open Circuit Voltage** 60 MAX OCV @ 1860 RPM
Auxiliary Power 120 VAC 2 x 2,400 WATTS, 60 Hz, Single Phase 120 VAC 2 x 1,800 WATTS, 60 Hz, Single Phase 240 VAC 2 x 3,600 WATTS, 60 Hz, Single Phase	**Auxiliary Power** 120 VAC 2 x 2,400 WATTS, 60 Hz, Single Phase 120 VAC 2 x 1,800 WATTS, 60 Hz, Single Phase 240 VAC 2 x 3,600 WATTS, 60 Hz, Single Phase

PHYSICAL DIMENSIONS			
Height (2)	**Width** (3)	**Depth**	**Weight**
36.9 in (937 mm)	28.5 in. (724 mm)	77.0 in. (1956 mm)	2095 lbs. (950 kg) (Approx.)

Lift Bail weight rating 2500 lbs. (1134 kg.) Maximum.

(1) Output rating in watts is equivalent to volt-amperes at unity power factor.
Output voltage is within +/- 10% at all loads up to rated capacity. When welding, available auxiliary power will be reduced.
(2) Top of Enclosure, add 8.3” (211mm) for exhaust pipe, also add 3.65”(93mm) for metal skid.
(3) Without metal skid.

SAFETY PRECAUTIONS

⚠ WARNING

Do not attempt to use this equipment until you have thoroughly read the engine manufacturer's manual supplied with your welder. It includes important safety precautions, detailed engine starting, operating and maintenance instructions, and parts lists.

ELECTRIC SHOCK can kill.
- **Do not touch electrically live parts or electrode with skin or wet clothing.**
- **Insulate yourself from work and ground**
- **Always wear dry insulating gloves.**

ENGINE EXHAUST can kill.
- **Use in open, well ventilated areas or vent exhaust outside.**

MOVING PARTS can injure.
- **Do not operate with doors open or guards off.**
- **Stop engine before servicing.**
- **Keep away from moving parts.**

See additional warning information at front of this operator's manual.

Only qualified personnel should install, use, or service this equipment.

VRD (VOLTAGE REDUCTION DEVICE)

The VRD feature provides additional safety in the CC-Stick mode especially in an environment with a higher risk of electric shock such as wet areas and hot humid sweaty conditions.

The VRD reduces the OCV (Open Circuit Voltage) at the welding output terminals while not welding to less than **30V** DC when the resistance of the output circuit is above 200Ω (ohms).

The VRD requires that the welding cable connections be kept in good electrical condition because poor connections will contribute to poor starting. Having good electrical connections also limits the possibility of other safety issues such as heat-generated damage, burns and fires.

The machine is shipped with the VRD switch in the "Off" position. To turn it "On" or "Off":
- Turn the engine "Off".
- Disconnect the negative battery cable.
- Lower the control panel by removing 6 front panel screws. (See Figure A.1)
- Place the VRD switch in the "On or "Off" position. (See Figure A.1)

With the VRD switch in the "On" position, the VRD lights are enabled.

FIGURE A.1

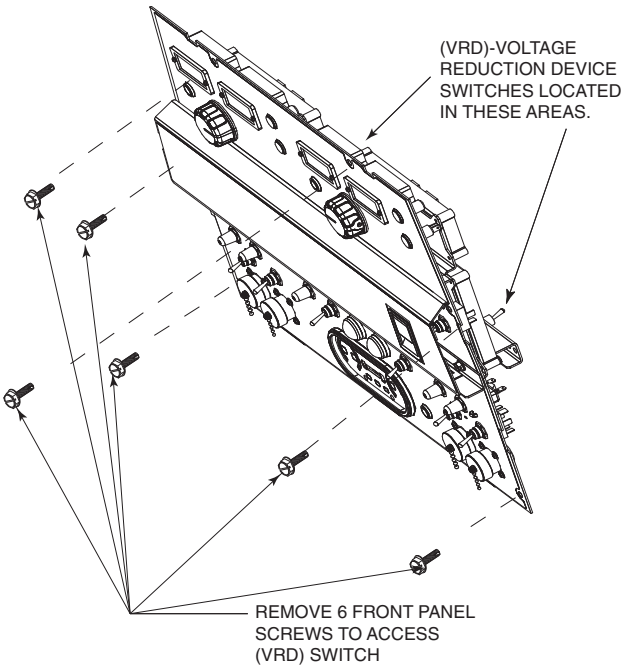

LOCATION AND VENTILATION

The welder should be located to provide an unrestricted flow of clean, cool air to the cooling air inlets and to avoid restricting the cooling air outlets. Also, locate the welder so that the engine exhaust fumes are properly vented to an outside area.

⚠ CAUTION

DO NOT MOUNT OVER COMBUSTIBLE SURFACES
Where there is a combustible surface directly under stationary or fixed electrical equipment, that surface should be covered with a steel plate at least .06"(1.6mm) thick, which should extend not less than 5.90"(150mm) beyond the equipment on all sides.

STORING

1. Store the machine in a cool, dry place when it is not in use. Protect it from dust and dirt. Keep it where it can't be accidentally damaged from construction activities, moving vehicles, and other hazards.
2. Drain the engine oil and refill with fresh 10W30 oil. Run the engine for about five minutes to circulate oil to all the parts. See the MAINTENANCE section of this manual for details on changing oil.
3. Remove the battery, recharge it, and adjust the electrolyte level. Store the battery in a dry, dark place.

STACKING

DUAL VANTAGE® 800-I machines cannot be stacked.

ANGLE OF OPERATION

To achieve optimum engine performance the DUAL VANTAGE® 800-I should be run in a level position.

The maximum angle of operation for the machine is 35 degrees continuous in all directions.

When operating the welder at an angle, provisions must be made for checking and maintaining the oil level at the normal (FULL) oil capacity. Also the effective fuel capacity will be slightly less than the specified 25 gal.(94.6 ltrs.).

LIFTING

The DUAL VANTAGE® 800-I weighs approximately 2195 lbs.(995 kg) with a full tank of fuel, 2095 lbs.(950kg) less fuel. A lift bail is mounted to the machine and should always be used when lifting the machine.

⚠ WARNING

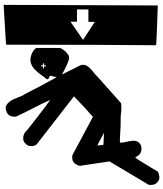

FALLING EQUIPMENT can cause injury.

- **Lift only with equipment of adequate lifting capacity.**
- **Be sure machine is stable when lifting.**
- **Do not lift this machine using lift bail if it is equipped with a heavy accessory such as trailer or gas cylinder.**
- **Do not lift machine if lift bail is damaged.**
- **Do not operate machine while suspended from lift bail.**
- **DO NOT EXCEED MAXIMUM LIFT BAIL WEIGHT RATING.**

(SEE TECHNICAL SPECIFICATIONS PAGE)

HIGH ALTITUDE OPERATION

At higher altitudes, output derating may be necessary. For maximum rating, derate the welder output 4% for every 300 meters (984 ft.) above 1500 meters (4920 ft.). For output of 500A and below, derate the welder output 4% for every 300 meters (984 ft.) above 2100 meters (6888 ft.).

Contact a Cummins Service Representative for any engine adjustments that may be required.

HIGH TEMPERATURE OPERATION

At temperatures above 40°C (104°F), output voltage derating may be necessary. For maximum output current ratings, derate welder voltage rating 2 volts for every 10°C (21°F) above 40°C (104°F).

TOWING

The recommended trailer for use with this equipment for road, in-plant and yard towing by a vehicle [1] is Lincoln's K2637-2. If the user adapts a non-Lincoln trailer, he must assume responsibility that the method of attachment and usage does not result in a safety hazard nor damage the welding equipment. Some of the factors to be considered are as follows:

1. Design capacity of trailer vs. weight of Lincoln equipment and likely additional attachments.
2. Proper support of, and attachment to, the base of the welding equipment so that there will be no undue stress to the trailer's framework.
3. Proper placement of the equipment on the trailer to insure stability side to side and front to back when being moved and when standing by itself.
4. Typical conditions of use, such as travel speed, roughness of surface on which the trailer will be operated, and environmental conditions.
5. Proper preventative maintenance of trailer.
6. Conformance with federal, state and local laws[1].

[1] Consult applicable federal, state and local laws regarding specific requirements for use on public highways.

VEHICLE MOUNTING

⚠ WARNING

Improperly mounted concentrated loads may cause unstable vehicle handling and tires or other components to fail.

- **Only transport this Equipment on serviceable vehicles which are rated and designed for such loads.**
- **Distribute, balance and secure loads so vehicle is stable under conditions of use.**
- **Do not exceed maximum rated loads for components such as suspension, axles and tires.**
- **Mount equipment base to metal bed or frame of vehicle.**
- **Follow vehicle manufacture's instructions.**

PRE-OPERATION ENGINE SERVICE

READ the engine operating and maintenance instructions supplied with this machine.

⚠ WARNING

- **Keep hands away from the engine muffler or HOT engine parts.**
- **Stop engine and allow to cool before fuelling.**
- **Do not smoke when fuelling.**
- **Fill fuel tank at a moderate rate and do not overfill.**
- **Wipe up spilled fuel and allow fumes to clear before starting engine.**
- **Keep sparks and flame away from tank.**

OIL

The DUAL VANTAGE® 800-I is shipped with the engine crankcase filled with high quality SAE 10W-30 oil (API class CD or better). Check the engine oil levels before starting the engine. If it is not up to the full mark on the dip stick, add oil as required. Check the oil level every four hours of running time during the first 35 running hours. Refer to the engine Operator's Manuals for specific oil recommendations and break-in information. The oil change interval is dependent on the quality of the oil and the operating environment. Refer to the engine Operator's Manuals for the proper service and maintenance intervals.

FUEL

USE DIESEL FUEL ONLY

- Fill the fuel tank with clean, fresh diesel fuel. The capacity of the fuel tank is approximately 25 gallons (95 liters). See engine Operator's Manual for specific fuel recommendations. **Running out of fuel may require bleeding the fuel injection pump.**

NOTE: Before starting the engine, open the fuel shut-off valve (pointer to be in line with hose).

FUEL CAP

Remove the plastic cap covering from the Fuel Tank Filler neck and install the Fuel Cap.

ENGINE COOLANT

⚠ WARNING

HOT COOLANT can burn skin.

- **Do not remove cap if radiator is hot.**

The welder is shipped with the engine and radiator filled with a 50% mixture of ethylene glycol and water. See the MAINTENANCE section and the engine Operator's Manual for more information on coolant.

BATTERY CONNECTION

⚠ WARNING

GASES FROM BATTERY can explode.

- **Keep sparks, flame and cigarettes away from battery.**

To prevent EXPLOSION when:

- **INSTALLING A NEW BATTERY — disconnect negative cable from old battery first and connect to new battery last.**
- **CONNECTING A BATTERY CHARGER — remove battery from welder by disconnecting negative cable first, then positive cable and battery clamp. When reinstalling, connect negative cable last. Keep well ventilated.**
- **USING A BOOSTER — connect positive lead to battery first then connect negative lead to negative battery lead at engine foot.**

BATTERY ACID can burn eyes and skin.

- **Wear gloves and eye protection and be careful when working near battery.**
- **Follow instructions printed on battery.**

IMPORTANT: To prevent ELECTRICAL DAMAGE WHEN:

a) Installing new batteries.

b) Using a booster.

Use correct polarity — **Negative Ground.**

The DUAL VANTAGE® 800-I is shipped with the negative battery cable disconnected. Before you operate the machine, make sure the Engine Switch is in the **OFF** position and attach the disconnected cable securely to the negative (-) battery terminal.

Remove the insulating cap from the negative battery terminal. Replace and tighten negative battery cable terminal. **NOTE:** This machine is furnished with a wet charged battery; if unused for several months, the battery may require a booster charge. Be sure to use the correct polarity when charging the battery.

MUFFLER OUTLET PIPE

Remove the plastic plug covering the muffler outlet tube. Using the clamp provided secure the outlet pipe to the outlet tube with the pipe positioned such that it will direct the exhaust in the desired position.

SPARK ARRESTOR

Some federal, state or local laws may require that petrol or diesel engines be equipped with exhaust spark arrestors when they are operated in certain locations where unarrested sparks may present a fire hazard. The standard muffler included with this welder has an internal spark arrestor. When required by local regulations, a suitable spark arrestor, must be installed and properly maintained.

⚠ CAUTION

An incorrect arrestor may lead to damage to the engine or adversely affect performance.

AIR CLEANER INLET HOOD

Remove the plastic plug covering the air cleaner inlet. Install the air cleaner inlet hood to the air cleaner.

WELDING TERMINALS

The DUAL VANTAGE® 800-I is equipped with a toggle switch for selecting "hot" welding terminals when in the "WELD TERMINALS ON" position or "cold" welding terminals when in the "REMOTELY CONTROLLED" position.

WELDING OUTPUT CABLES

With the engine off, route the electrode and work cables thru the strain relief bracket provided on the front of the base and connect to the terminals provided. These connections should be checked periodically and tightened if necessary.

Listed in Table A.1 are copper cable sizes recommended for the rated current and duty cycle. Lengths stipulated are the distance from the welder to work and back to the welder again. Cable sizes are increased for greater lengths primarily for the purpose of minimizing cable voltage drop.

TABLE A.1 Combined Length of Electrode and Work Cables.

TOTAL COMBINED LENGTH OF ELECTRODE AND WORK CABLES		
Cable Length	**Parallel Cables**	**Cable Size for 600 Amps 100% Duty Cycle**
Lengths up to 150 ft. (46m)	2	1/0 AWG (53mm²)
150 ft. (46m) to 200 ft. (61m)		2/0 AWG (67mm²)
200 ft. (61m) to 250 ft. (76m)		3/0 AWG(85mm²)

MACHINE GROUNDING ⏚

Because this portable engine driven welder creates its own power, it is not necessary to connect its frame to an earth ground, unless the machine is connected to premises wiring (home, shop, etc.).

To prevent dangerous electric shock, other equipment to which this engine driven welder supplies power must:

⚠ WARNING

- **Be grounded to the frame of the welder using a grounded type plug or be double insulated.**
- **Do not ground the machine to a pipe that carries explosive or combustible material.**

When this welder is mounted on a truck or trailer, its frame must be securely connected to the metal frame of the vehicle. When this engine driven welder is connected to premises wiring such as that in a home or shop, its frame must be connected to the system earth ground. See further connection instructions in the section entitled “Standby Power Connections” as well as the article on grounding in the latest National Electrical Code and the local codes.

In general, if the machine is to be grounded, it should be connected with a #8 or larger copper wire to a solid earth ground such as a metal ground stake going into the ground for at least 10 Feet or to the metal framework of a building which has been effectively grounded.

The National Electric Code lists a number of alternate means of grounding electrical equipment. A machine grounding stud marked with the symbol ⏚ is provided on the front of the welder.

REMOTE CONTROL

The DUAL VANTAGE® 800-I is equipped with a 6-pin and a 14-pin connector. The 6-pin connector is for connecting the K857 or K857-1 Remote Control or for TIG welding, the K870 foot Amptrol or the K963-3 hand Amptrol. When in the CC-STICK, ARC GOUGING or CV-WIRE modes and when a remote control is connected to the 6-pin Connector, the auto-sensing circuit automatically switches the OUTPUT control from control at the welder to remote control.

When in TOUCH START TIG mode and when a Amptrol is connected to the 6-Pin Connector, the OUTPUT dial is used to set the maximum current range of the CURRENT CONTROL of the Amptrol.

When in the DOWNHILL PIPE mode and when a remote control is connected to the 6-Pin or 14-Pin connector, the output control is used to set the maximum current range of the remote.

EXAMPLE: When the OUTPUT CONTROL on the welder is set to 200 amps the current range on the remote control will be 40-200 amps, rather than the full 40-300 amps. Any current range that is less than the full range provides finer current resolution for more fine tuning of the output.

In the CV-WIRE mode, if the feeder being used has a voltage control when the wire feeder control cable is connected to the 14-Pin Connector, the auto-sensing circuit automatically makes OUTPUT CONTROL inactive and the wire feeder voltage control active. Otherwise, the OUTPUT CONTROL is used to preset the voltage.

The 14-pin connector is used to directly connect a wire feeder control cable. In the CV-WIRE mode, when the control cable is connected to the 14-pin connector, the auto-sensing circuit automatically makes the Output Control inactive and the wire feeder voltage control active.

⚠ WARNING

NOTE: When a wire feeder with a built in welding voltage control is connected to the 14-pin connector, do not connect anything to the 6-pin connector.

AUXILIARY POWER RECEPTACLES

The auxiliary power of the DUAL VANTAGE® 800-I consists of Single Phase 60Hz Power. Output Voltage is within +/- 10% at loads up to rated capacity.

One 120VAC NEMA (5-20R) 20 amp duplex receptacle is protected by two 20 amp circuit breakers that provide 2400 watts Peak / 2400 watts Continuous power. Maximum current is 20 amps total.

Two 120VAC European (IEC-309) 16 amp receptacles are protected by two 15 amp circuit breakers that provide 1800 watts Peak / 1800 watts Continuous power. Maximum current is 15 amps.

Two 240VAC European (IEC-309) 16 amp receptacles are protected by two 15 amp 2-pole circuit breakers that provide 3600 watts Peak / 3600 watts Continuous power. Maximum current is 15 amps.

120 V RECEPTACLES

Two GFCIs protect the two 120V Auxiliary Power receptacles. A GFCI (Ground Fault Circuit Interrupter) is a device to protect against electric shock should a piece of defective equipment connected to it develop a ground fault. If this situation should occur, the GFCI will trip, removing voltage from the output of the receptacle. If a GFCI is tripped see the MAINTENANCE section for detailed information on testing and resetting it. A GFCI should be properly tested at least once every month.

The 120 V auxiliary power receptacles should only be used with three wire grounded type plugs or approved double insulated tools with two wire plugs. The current rating of any plug used with the system must be at least equal to the current capacity of the associated receptacle.

STANDBY POWER CONNECTIONS

The DUAL VANTAGE® 800-I is suitable for temporary, standby or emergency power using the engine manufacturer's recommended maintenance schedule.

The DUAL VANTAGE® 800-I can be permanently installed as a standby power unit for 120/240 volt (60 Hz). Connections must be made by a licensed electrician who can determine how the 120/240 VAC power can be adapted to the particular installation and comply with all applicable electrical codes. The following information can be used as a guide by the electrician for most applications.

1. Install an isolation switch between the power company meter and the premises disconnect.(The DUAL VANTAGE® 800-I and the power company supplies must not be connected together).

   Switch rating must be the same or greater than the customer's premises disconnect and service over current protection.
2. Take necessary steps to assure load is limited to the capacity of the DUAL VANTAGE® 800-I by installing a 20 amp, 240 VAC single pole circuit breaker. Loading above the rated output will reduce output voltage below the allowable -10% of rated voltage which may damage appliances or other motor-driven equipment and may result in overheating of the DUAL VANTAGE® 800-I engine.
3. Install a 20 amp ingle phase plug to the single-pole circuit breaker using 6.02mm (minimum) x 3 conductor.
4. Plug this cable into the Single phase receptacle on the DUAL VANTAGE® 800-I case front.

⚠ WARNING

- **Only a licensed, certified, trained electrician should install the machine to a premises or residential electrical system. Be certain that:**
- **The installation complies with the National Electrical Code and all other applicable electrical codes.**
- **The premises is isolated and no feedback into the utility system can occur. Certain laws require the premises to be isolated before the generator is linked to the premises. Check your local requirements.**

CONNECTION OF WIRE FEEDERS WITH CONTROL CABLE (14 PIN)

WARNING

Shut off welder before making any electrical connections.

CONNECTION OF LF-72, LF-74, FLEX FEED 74 HT, FLEX FEED 84, LN-25 PRO DUAL POWER TO THE DUAL VANTAGE® 800-I

Note: The DUAL VANTAGE® 800-I can operate two different wire feeders at the same time.

- Shut the welder off.
- Set the “WIRE FEEDER VOLTMETER” switch to either “+” or “-” as required by the electrode being used (See Figure A.2).
- For electrode Positive, connect the electrode cable to the "+" terminal of the welder and work cable to the "-" terminal of the welder. For electrode Negative, connect the electrode cable "-" terminal of the welder and work cable to the "+" terminal of the welder.
- Set the “MODE” switch to the “CV-WIRE” position.
- Adjust the “ARC CONTROL” knob to desired Crispness. SOFT for MIG and CRISP for Innershield.
- Set the “WELDING TERMINALS” switch to the “REMOTE CONTROLLED” position.
- Set the wire feeder voltage switch to 42V.
- Connect the 14 pin control cable from the wire feeder to the engine drive (See Figure A.3).
- This procedure can be done for both “Single” and “Dual” operator modes.

FIGURE A.2

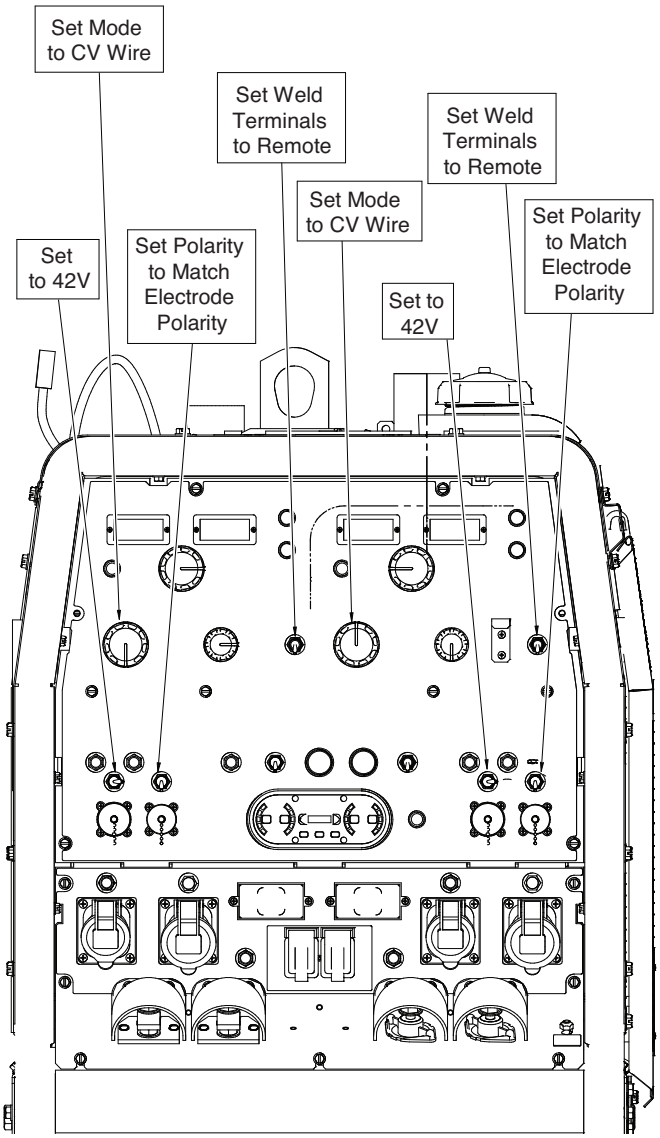

FIGURE A.3

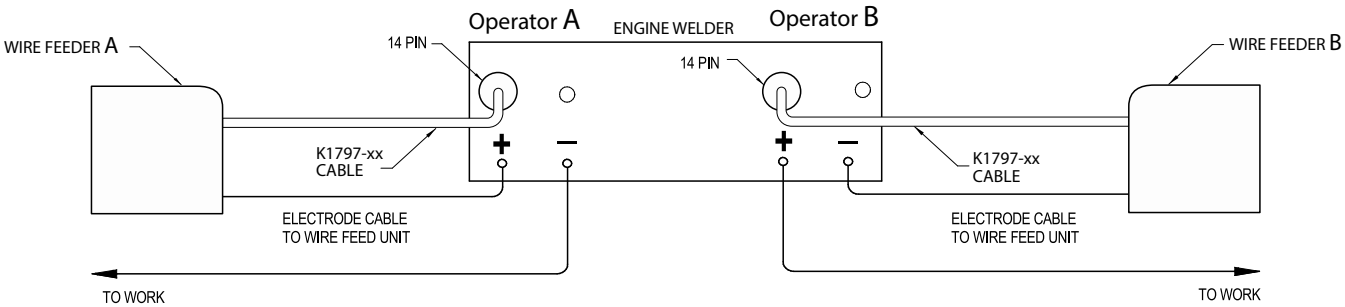

CONNECTION OF ACROSS THE ARC WIRE FEEDERS TO THE DUAL VANTAGE® 800-I

These connections instructions apply to both the LN-25 Pro and Activ8 models. The feeders have an internal contactor and the electrode is not energized until the gun trigger is closed. When the gun trigger is closed the wire will begin to feed and the welding process is started.

- Shut the welder off.
- For electrode Positive, connect the electrode cable to the "+" terminal of the welder and work cable to the "-" terminal of the welder. For electrode Negative, connect the electrode cable "-" terminal of the welder and work cable to the "+" terminal of the welder.
- Attach the single lead from the front of the feeder to work using the spring clip at the end of the lead. This is a control lead to supply current to the wire feeder motor; it does not carry welding current (See Figure A.5).
- Set the MODE switch to the "CV-WIRE" position (See Figure A.4).
- Set the "WELD TERMINALS" switch to "ON"
- Set the "ARC CONTROL" knob to "0" initially and adjust to suit.

NOTE: The LN-25 (K431) Remote Control Module and (K432) Remote Control Module are not recommended for use with the DUAL VANTAGE® 800-I.

FIGURE A.4

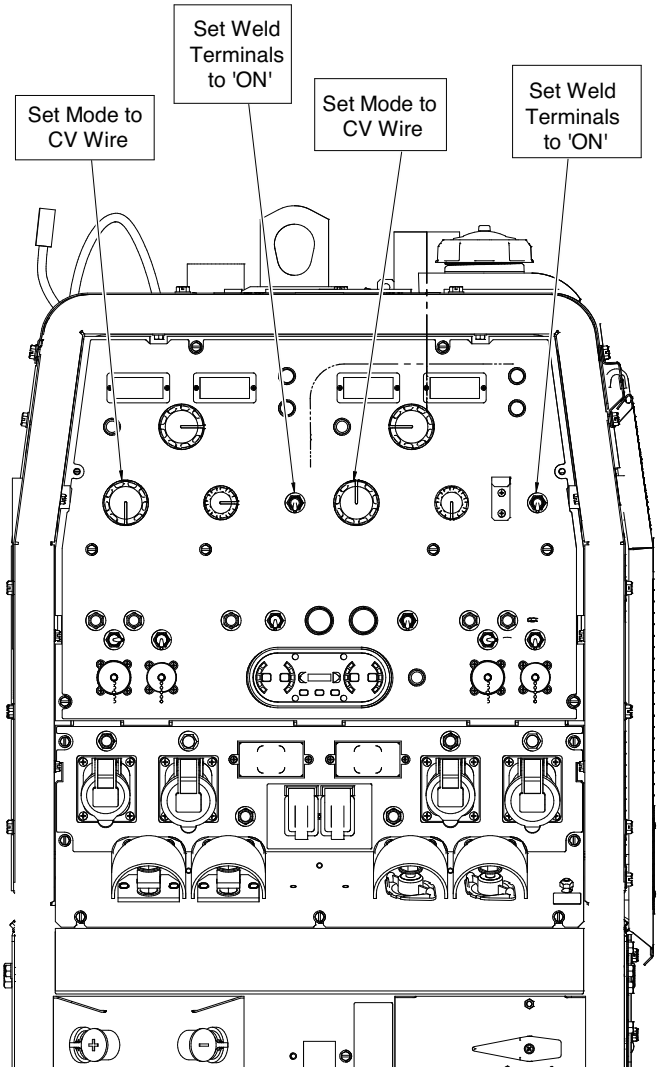

FIGURE A.5

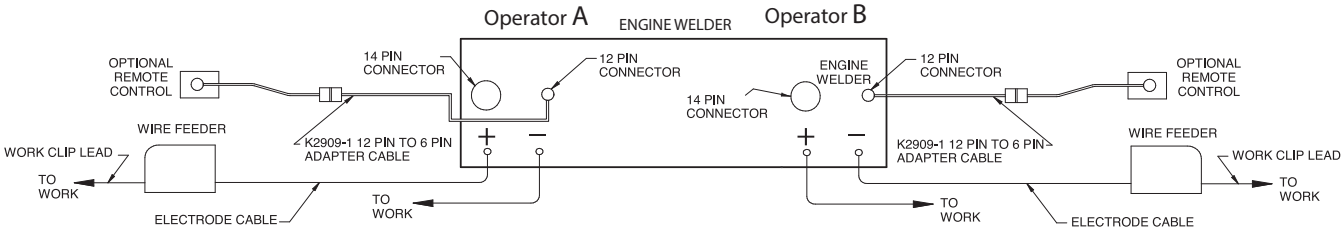

⚠ CAUTION

Certain electrical devices cannot be powered by this product. See Table A.2

TABLE A.2
ELECTRICAL DEVICE USE WITH THIS PRODUCT

Type	Common Electrical Devices	Possible Concerns
Resistive	Heaters, toasters, incandescent light bulbs, electric range, hot pan, skillet, coffee maker.	NONE
Capacitive	TV sets, radios, microwaves, appliances with electrical control.	Voltage spikes or high voltage regulation can cause the capacitative elements to fail. Surge protection, transient protection, and additional loading is recommended for 100% fail-safe operation. DO NOT RUN THESE DEVICES WITHOUT ADDITIONAL RESISTIVE TYPE LOADS.
Inductive	Single-phase induction motors, drills, well pumps, grinders, small refrigerators, weed and hedge trimmers.	These devices require large current inrush for starting. Some synchronous motors may be frequency sensitive to attain maximum output torque, but they SHOULD BE SAFE from any frequency induced failures.
Capacitive / Inductive	Computers, high resolution TV sets, complicated electrical equipment.	An inductive type line conditioner along with transient and surge protection is required, and liabilities still exist. DO NOT USE THESE DEVICES WITH THIS PRODUCT.

The Lincoln Electric Company is not responsible for any damage to electrical components improperly connected to this product.

OPERATION

SAFETY PRECAUTIONS

Read and understand this entire section before operating your DUAL VANTAGE® 800-I.

- **Do not attempt to use this equipment until you**

⚠ WARNING

have thoroughly read the engine manufacturer's manual supplied with your welder. It includes important safety precautions, detailed engine starting, operating and maintenance instructions, and parts lists.

ELECTRIC SHOCK can kill.
- **Do not touch electrically live parts or electrode with skin or wet clothing.**
- **Insulate yourself from work and ground**
- **Always wear dry insulating gloves.**

ENGINE EXHAUST can kill.
- **Use in open, well ventilated areas or vent exhaust outside**
- **Do not stack anything near the engine.**

MOVING PARTS can injure.
- **Do not operate with doors open or guards off.**
- **Stop engine before servicing.**
- **Keep away from moving parts**

- **Only qualified personnel should operate this equipment.**

- **Always operate the welder with the sliding door closed and the side panels in place as these provide maximum protection from moving parts and insure proper cooling air flow.**

GENERAL DESCRIPTION

The DUAL VANTAGE® 800-I is a dual-operator multi-purpose diesel engine-driven welding power source. The machine uses a brush type alternating current generator for DC multi-purpose welding, for 120/240 VAC single phase. The DC welding control system uses state of the art Chopper Technology for superior welding performance.

The DUAL VANTAGE® 800-I is fitted with a selectable VRD(Voltage Reduction Device). The VRD operates in the CC-Stick mode reducing the OCV to <30 volts, increasing operator safety when welding is performed in environments with increased hazard of electric shock such as wet areas and hot, humid sweaty conditions.

FOR AUXILIARY POWER:

Start the engine and set the IDLER control switch to the desired operating mode. Full power is available regardless of the welding control settings providing no welding current is being drawn.

ENGINE OPERATION

Before Starting the Engine:

- Be sure the machine is on a level surface.

- Open side engine door and remove the engine oil dipstick and wipe it with a clean cloth. Reinsert the dipstick and check the level on the dipstick.

- Add oil (if necessary) to bring the level up to the full mark. Do not overfill. Close engine door.

- Check radiator for proper coolant level. (Fill if necessary).

- See Engine Owner's Manual for specific oil and coolant recommendations.

⚠ WARNING

ADD FUEL

- **Stop engine while fueling.**
- **Do not smoke when fueling.**
- **Keep sparks and flame away from tank.**
- **Do not leave unattended while fueling.**
- **Wipe up spilled fuel and allow fumes to clear before starting engine.**
- **Do not overfill tank, fuel expansion may cause overflow.**

DIESEL FUEL can cause fire.

DIESEL FUEL ONLY-Low sulphur fuel or ultra low sulphur fuel in U.S.A. and Canada.

- Remove the fuel tank cap.
- Fill the tank. DO NOT FILL THE TANK TO THE POINT OF OVERFLOW.
- Replace the fuel cap and tighten securely.
- See Engine Owner's Manual for specific fuel recommendations.

HAND PRIMER BUTTON

Air in the fuel system will cause the following engine problems:

- Hard to start
- Run rough
- Misfire
- Fuel knock

For faster air purge, a small amount of air can be vented from the system by pumping the **hand primer button** on the fuel filter head. (See **Figure B.1, Engine Service Side View**)

BREAK-IN PERIOD

No break in period is required for the Cummins engine.

RECOMMENDED APPLICATIONS

The DUAL VANTAGE® 800-I provides excellent constant current DC welding output for stick (SMAW) and TIG welding. The DUAL VANTAGE® 800-I also provides excellent constant voltage DC welding output for MIG (GMAW), Innershield (FCAW), Outershield (FCAW-G) and Metal Core welding. In addition the DUAL VANTAGE® 800-I can be used for Arc Gouging with carbons up to 1/2"(13mm) in diameter.

The DUAL VANTAGE® 800-I is **not recommended** for pipe thawing.

GENERATOR

The DUAL VANTAGE® 800-I provides smooth 120/240 VAC single phase output for auxiliary power and emergency standby power.

FIGURE B.1 Engine Service Side View

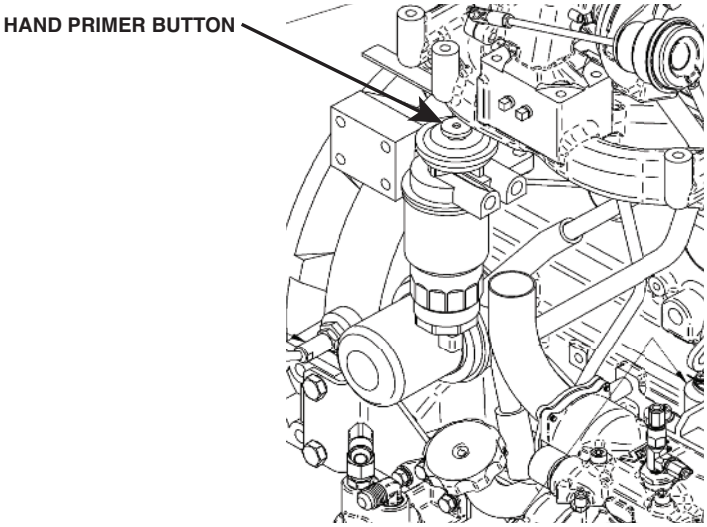

FIGURE B.2

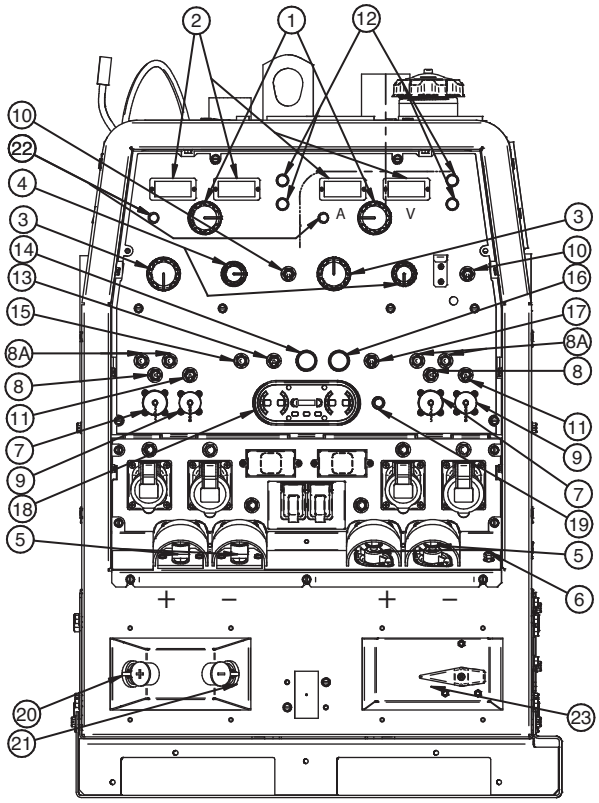

WELDING CONTROLS (Figure B.2)

1. OUTPUT CONTROL- The OUTPUT dial is used to preset the output voltage or current as displayed on the digital meters for the five welding modes. When in the ARC GOUGING or CV-WIRE modes and when a remote control is connected to the 6-Pin or 14-Pin Connector, the auto-sensing circuit automatically switches the OUTPUT CONTROL from control at the welder to the remote control.

When in DOWNHILL PIPE and CC-STICK modes if a remote control is connected to the 6-Pin or 14 Pin Connectors, the output is controlled by the remote and the output control on the machine is used to set the maximum current range for the remote.

EXAMPLE: When the OUTPUT CONTROL on the welder is set to 200 amps the current range on the remote control will be MIN-200 amps, rather than the full MIN-MAX amps. Any current range that is less than the full range provides finer current resolution for more fine tuning of the output.

In the CV-WIRE mode, if the feeder being used has a voltage control when the wire feeder control cable is connected to the 14-Pin Connector, the auto-sensing circuit automatically makes OUTPUT CONTROL inactive and the wire feeder voltage control active. Otherwise, the OUTPUT CONTROL is used to preset the voltage

When in the TOUCH START TIG mode and when an Amptrol is connected to the 6-Pin Connector, the OUTPUT dial is used to set the maximum current range of the CURRENT CONTROL of the Amptrol.

2. DIGITAL OUTPUT METERS- The digital meters allow the output voltage (CV-WIRE mode) or current (CC-STICK, DOWNHILL PIPE, ARC GOUGING and TIG modes) to be set prior to welding using the OUTPUT control dial. During welding, the meter display the actual output voltage (VOLTS) and current (AMPS). A memory feature holds the display of both meters on for seven seconds after welding is stopped. This allows the operator to read the actual current and voltage just prior to when welding was ceased.

While the display is being held the left-most decimal point in each display will be flashing. The accuracy of the meters is +/- 3%.

3. WELD MODE SELECTOR SWITCH-

(Provides five selectable welding modes)

CV-WIRE
ARC GOUGING
DOWNHILL PIPE
CC-STICK
TOUCH START TIG

4. ARC CONTROL- The ARC CONTROL dial is active in the CV-WIRE, CC-STICK and DOWNHILL PIPE modes, and has different functions in these modes. This control is not active in the TIG and ARC GOUGING mode.

CC-STICK mode: In this mode, the ARC CONTROL dial sets the short circuit current (arc-force) during stick welding to adjust for a soft or crisp arc. Increasing the dial from –10 (soft) to +10 (crisp) increases the short circuit current and prevents sticking of the electrode to the plate while welding. This can also increase spatter. It is recommended that the ARC CONTROL be set to the minimum number without electrode sticking. Start with a setting at 0.

DOWNHILL PIPE mode: In this mode, the ARC CONTROL dial sets the short circuit current (arc-force) during stick welding to adjust for a soft or a more forceful digging arc (crisp). Increasing the number from –10 (soft) to +10 (crisp) increases the short circuit current which results in a more forceful digging arc. Typically a forceful digging arc is preferred for root and hot passes. A softer arc is preferred for fill and cap passes where weld puddle control and deposition ("stacking" of iron) are key to fast travel speeds. It is recommended that the ARC CONTROL be set initially at 0.

CV-WIRE mode: In this mode, turning the ARC CONTROL clock wise from –10 (soft) to +10 (crisp) changes the arc from soft and washed-in to crisp and narrow. It acts as an inductance/pinch control. The proper setting depends on the procedure and operator preference. Start with a setting of 0.

5. WELD OUTPUT TERMINALS WITH FLANGE NUT- Provides a connection point for the electrode and work cables.

6. GROUND STUD- ⏚ Provides a connection point for connecting the machine case to earth ground.

7. 14-PIN CONNECTOR- For attaching wire feeder control cables. Includes contactor closure circuit, auto-sensing remote control circuit, and 42V power. The remote control circuit operates the same as the 6 Pin Amphenol.

8. 42V / 115V WIRE FEEDER VOLTAGE SWITCH:

Toggles output of 14-pin connector to voltage requirement of Wire Feeder. (Located above 14-pin connector.)

8A. 42V and 115V WIRE FEEDER BREAKERS

9. 6-PIN CONNECTOR- For attaching optional remote control equipment. Includes auto-sensing remote control circuit.

10. WELD TERMINALS CONTROL SWITCH-

In the WELD TERMINALS ON position, the output is electrically hot all the time. In the REMOTELY CONTROLLED position, the output is controlled by a wire feeder or amptrol device, and is electrically off until a remote switch is depressed.

11. WIRE FEEDER VOLTMETER SWITCH:

Matches the polarity of the wire feeder voltmeter to the polarity of the electrode.

12. VRD (Voltage Reduction Device) INDICATOR LIGHTS- On the front panel of the DUAL VANTAGE® 800-I are two indicator lights. A red light when lit indicates OCV(Open Circuit Voltage) is equal to or greater than 30V and a green light when lit indicates OCV(Open Circuit Voltage) is less than 30V.

The VRD “On/Off” switch inside the control panel must be “On” for the VRD function to be active and the lights to be enabled. When the machine is first started with VRD enabled, both lights will illuminate for 5 seconds.

These lights monitor the OCV(Open Circuit Voltage) and weld voltage at all times. In the CC-Stick mode when not welding the green light will illuminate indicating that the VRD has reduced the OCV to less than 30V. During welding the red light will illuminate whenever the arc voltage is equal to or greater than 30V. This means that the red and green light may alternate depending on the weld voltage. This is normal operation.

If the red light remains illuminated when not welding in the CC-stick mode, the VRD is not functioning properly. Please refer to your local field service shop for service. If the VRD is turned “On” and the lights don’t come “On”, refer to the trouble shooting section.

TABLE B.1

VRD INDICATOR LIGHTS			
MODE		VRD "ON"	VRD "OFF"
CC-STICK	OCV	Green (OCV Reduced)	No Lights
	While Welding	Red or Green (Depends on Weld Voltage) *	
CV-WIRE	OCV	Green (OCV Reduced)	
		Green (No OCV) Weld Terminals Remotely Controlled Gun Trigger Open	
	While Welding	Red or Green (Depends on Weld Voltage) *	
PIPE	OCV	Green (No Output)	
	While Welding	Not Applicable (No Output)	
ARC GOUGING	OCV	Green (OCV Reduced)	
	While Welding	(Depends on Weld Voltage) *	
TIG	OCV	Green (Process is Low Voltage)	
	While Welding	Green (Process is Low Voltage)	

* It is normal for the lights to alternate between colors while welding.

ENGINE CONTROLS:

13. RUN/STOP SWITCH -

-RUN position energizes the engine prior to starting. STOP position stops the engine. The oil pressure interlock switch prevents battery drain if the switch is left in the RUN position and the engine is not operating.

14. GLOW PLUG PUSH BUTTON -

- When pushed activates the glow plugs. Glow plug should not be activated for more than 20 seconds continuously.

15. CIRCUIT BREAKER - For protection of Battery Charging Circuit.

16. START PUSH BUTTON - Energizes the starter motor to crank the engine.

17. IDLER SWITCH - Has two positions as follows:

1) In the HIGH position, the engine runs at the high idle speed controlled by the engine governor.
2) In the AUTO position, the idler operates as follows:

- When switched from HIGH to AUTO or after starting the engine, the engine will operate at full speed for approximately 12 seconds and then go to low idle speed.
- When the electrode touches the work or power is drawn for lights or tools (approximately 100 Watts minimum), the engine accelerates and operates at full speed.
- When welding ceases or the AC power load is turned off, a fixed time delay of approximately 12 seconds starts. If the welding or AC power load is not restarted before the end of the time delay, the idler reduces the engine speed to low idle speed.
- The engine will automatically return to high idle speed when there is welding load or AC power load reapplied.

18. DASH BOARD GAUGE -

The dash board gauge displays 5 gauges:

18a. OIL PRESSURE

The gauge displays the engine oil pressure when the engine is running.

18b. ENGINE TEMPERATURE

The gauge displays the engine coolant temperature.

18c. HOUR METER

The hour meter displays the total time that the engine has been running. This meter is a useful indicator for scheduling preventive maintenance.

18d. FUEL LEVEL

Displays the level of diesel fuel in the fuel tank.

The operator must watch the fuel level closely to prevent running out of fuel and possibly having to bleed the system.

18e. BATTERY VOLTAGE INDICATOR

Displays the battery voltage and indicates that the charging system is functioning properly.

19. ENGINE PROTECTION LIGHT - A warning indicator light for Low Oil Pressure and/or Coolant Over Temperature.The light is off when the systems are functioning properly. The light will come on and the engine will shutdown when there is Low Oil Pressure and/or the Coolant is Over Temperature.

Note: The light remains off when the RUN-STOP switch is in the "ON" position prior to starting the engine. However if the engine is not started within 60 seconds the light will come on. When this happens the RUN-STOP switch must be returned to the "OFF" position to reset the engine protection system and light.

BATTERY JUMP START TERMINAL (20 - 21)

20. POSITIVE BATTERY JUMP START TERMINAL.

21. NEGATIVE BATTERY JUMP START TERMINAL -

12V battery jump start feature is standard.
Covered output studs for convenient access, and protection against accidental impact. Can be used to jump-start a utility truck with up to 800 cold cranking amps. Can also be used to jump-start the DUAL VANTAGE 800-I.

22. THERMAL LIGHTS - These status lights indicate the Power Source has been driven into thermal overload. Welding output shuts off to protect the welding system components and resets when the overload condition is resolved. The engine will continue to operate.

23. SINGLE / DUAL OPERATOR SELECTOR SWITCH - Parallel switch that allows the user to choose between Single Operator and Dual Operator weld modes. Single Operator mode is when the switch is in the “Up” position. Dual Operator mode is when the switch is in the “Down” position.

ENGINE OPERATION

STARTING THE ENGINE

1. Open the engine compartment door and check that the fuel shutoff valve located to the left of the fuel filter housing is in the open position (lever to be in line with the hose).
2. Make sure battery disconnect switch is in the on position.
3. Check for proper oil level and coolant level. Close engine compartment door.
4. Remove all plugs connected to the AC power receptacles.
5. Set IDLER switch to “AUTO”.
6. Firmly set the Operator Selector Switch to Single or Dual. The Operator Selector Switch can be set to Single or Dual mode and must be securely in one of the two positions.
7. Set the RUN/STOP switch to “RUN”. Observe that the engine protection and battery charging lights are on.

7a. Press Glow Plug Button and hold 15 to 20 seconds.

8. Press START button until the engine starts or for up to 10 seconds.
9. Release the engine START button when the engine starts.
10. Check that the engine protection and battery charging lights are off. If the engine protection light is on after starting, the engine will shutdown in a few seconds. Investigate any indicated problem.
11. Allow the engine to warm up at low idle speed for several minutes before applying a load and/or switching to high idle. Allow a longer warm up time in cold weather.

COLD WEATHER STARTING

With a fully charged battery and the proper weight oil, the engine should start satisfactorily even down to about 0°F(-18°C). If the engine must be frequently started below 10°(-12°C), it may be desirable to install the optional ether start kit (K887-1). For extreme cold conditions it may be desirable to install additional equipment such as a block heater or oil pan pad heater, etcetera.

NOTE: Extreme cold weather starting may require longer glow plug operations.

STOPPING THE ENGINE

1. Switch the RUN/STOP switch to “STOP”. This turns off the voltage supplied to the shutdown solenoid. A backup shutdown can be accomplished by shutting off the fuel valve located on the fuel line.

TYPICAL FUEL CONSUMPTION

Refer to Table B.2 for typical fuel consumption of the DUAL VANTAGE® 800-I Engine for various operating settings.

TABLE B.2
Cummins B3.3T Engine Fuel Consumption

	Cummins B3.3T 69HP	Running Time for 25GAL.(94.6L) (Hours)
High Idle No load 1860 RPM	1.10 Gal./hour (4.17 L/hour)	22.7
Low Idle No load 1500 RPM	0.72 Gal./hour (2.72 L/hour)	34.83
DC CC Weld Output 500A 100% Duty Cycle	2.37 Gal./hour (8.96 L/hour)	10.56
DC CC Weld Output 600A 100% Duty Cycle	2.92 Gal./hour (11.06 L/hour)	8.56
DC CC Weld Output 650A 60% Duty Cycle	2.08 Gal./hour (7.87 L/hour)	12.02
DC CC Weld Output 700A 40% Duty Cycle	1.70 Gal./hour (6.43 L/hour)	14.71
Aux. 7.2kva	1.28 Gal./hour (4.84 L/hour)	19.55
Aux. 12kva	1.63 Gal./hour (6.18 L/hour)	15.3
Aux. 20kva	2.18 Gal./hour (8.25 L/hour)	11.48

NOTE: This data is for reference only. Fuel consumption is approximate and can be influenced by many factors, including engine maintenance, environmental conditions and fuel quality.

WELDER OPERATION

DUTY CYCLE

Duty Cycle is the percentage of time the load is being applied in a 10 minute period. For example a 60% duty cycle, represents 6 minutes of load and 4 minutes of no load in a 10 minute period.

ELECTRODE INFORMATION

For any electrode the procedures should be kept within the rating of the machine. For information on electrodes and their proper application see (www.lincoln-electric.com) or the appropriate Lincoln publication.

The DUAL VANTAGE® 800-I can be used with a broad range of DC stick electrodes. The MODE switch provides two stick welding settings as follows:

CONSTANT CURRENT (CC-STICK) WELDING

The CC-STICK position of the MODE switch is designed for horizontal and vertical-up welding with all types of electrodes, especially low hydrogen.

The ARC CONTROL dial sets the short circuit current (arc-force) during stick welding to adjust for a soft or crisp arc. Increasing the number from -10(soft) to +10(crisp) increases the short circuit current and prevents sticking of the electrode to the plate while welding. This can also increase spatter. It is recommended that the ARC CONTROL be set to the minimum number without electrode sticking. Start with the dial set at 0.

NOTE: Due to the low OCV with the VRD on, a very slight delay during striking of the electrodes may occur. Due to the requirement of the resistance in the circuit to be low for a VRD to operate, a good metal-to-metal contact must be made between the metal core of the electrode and the job. A poor connection anywhere in the welding output circuit may limit the operation of the VRD. This includes a good connection of the work clamp to the job. The work clamp should be connected as close as practical to where the welding will be performed.

A. For New Electrodes

E6010 - Touch, Lift to Start the Arc.
E7018, E7024 - Touch, Rock Back and Forth in Joint, Lift.

Once the arc is started, normal welding technique for the application is then used.

B. For Re-Striking Electrodes

Some electrodes form a cone at the end of the electrode after the welding arc has been broken, particularly iron powder and low hydrogen electrodes. This cone will need to be broken off in order to have the metal core of the electrode make contact.

E6010 - Push, Twist in Joint, Lift
E7018, E7024 - Touch, Rock Back and Forth in Joint, Lift.

Once the arc is started, normal welding technique for the application is then used.

For other electrodes the above techniques should be tried first and varied as needed to suit operator preference. The goal for successful starting is good metal to metal contact.

For indicator light operation, see Table B.1.

DOWNHILL PIPE Welding

This slope controlled setting is intended for "out-of-position" and "down hill" pipe welding where the operator would like to control the current level by changing the arc length.

The ARC CONTROL dial sets the short circuit current (arc-force) during stick welding to adjust for a soft or more forceful digging arc (crisp). Increasing the number from -10(soft) to +10(crisp) increases the short circuit current which results in a more forceful digging arc.

Typically a forceful digging arc is preferred for root and hot passes. A softer arc is preferred for fill and cap passes where weld puddle control and deposition (“stacking” of iron) are key to fast travel speeds. This can also increase spatter.

It is recommended that the ARC CONTROL be set to the minimum number without electrode sticking. Start with the dial set at 0.

NOTE: With the VRD switch in the “ON” position (See figure A.1 for location) there is no output in the DOWNHILL PIPE mode. For indicator light operation, see Table B.1.

TIG WELDING

The TOUCH START TIG setting of the MODE switch is for DC TIG (Tungsten Inert Gas) welding. To initiate a weld, the OUTPUT CONTROL dial is first set to the desired current and the tungsten is touched to the work. During the time the tungsten is touching the work there is very little voltage or current and, in general, no tungsten contamination. Then, the tungsten is gently lifted off the work in a rocking motion, which establishes the arc.

When in the TOUCH START TIG mode and when a Amptrol is connected to the 6-Pin connector the OUTPUT CONTROL dial is used to set the maximum current range of the current control of the Amptrol.

The ARC CONTROL is not active in the TIG mode. To STOP a weld, simply pull the TIG torch away from the work.

When the arc voltage reaches approximately 30 Volts the arc will go out and the machine will reset the current to the Touch Start level.

To reinitiate the arc, retouch the tungsten to the work and lift. Alternatively, the weld can be stopped by releasing the Amptrol or arc start switch.

The DUAL VANTAGE® 800-I an be used in a wide variety of DC TIG welding applications. In general the 'Touch Start' feature allows contamination free starting without the use of a Hi-frequency unit.

If desired, the K930-2 TIG Module can be used with the DUAL VANTAGE® 800-I. The settings are for reference.

DUAL VANTAGE® 800-I settings when using the K930-2 TIG Module with an Amptrol or Arc Start Switch:

- Set the MODE Switch to the TOUCH START TIG setting.
- Set the "IDLER" Switch to the "AUTO" position.
- Set the "WELDING TERMINALS" switch to the "REMOTELY CONTROLLED" position.

This will keep the "Solid State" contactor open and provide a "cold" electrode until the Amptrol or Arc Start Switch is pressed.

When using the TIG Module, the OUTPUT CONTROL on the DUAL VANTAGE® 800-I is used to set the maximum range of the CURRENT CONTROL on the TIG Module or an Amptrol if connected to the TIG Module.

NOTE: The TIG process is to receive a low voltage welding process. There is no difference in operation with the VRD "On" or "Off" for this mode. For indicator light operation, see **Table B.1.**

TABLE B.3

TYPICAL CURRENT RANGES (1) FOR TUNGSTEN ELECTRODES(2)

Tungsten Electrode Diameter in. (mm)		DCEN (-)	DCEP (+)	Approximate Argon Gas Flow Flow Rate C.F.H. (l /min.)				TIG TORCH Nozzle Size (4), (5)
		1%, 2% Thoriated Tungsten	1%, 2% Thoriated Tungsten	Aluminum		Stainless Steel		
.010	(.25)	2-15	(3)	3-8	(2-4)	3-8	(2-4)	#4, #5, #6
0.020	(.50)	5-20	(3)	5-10	(3-5)	5-10	(3-5)	
0.040	(1.0)	15-80	(3)	5-10	(3-5)	5-10	(3-5)	
1/16	(1.6)	70-150	10-20	5-10	(3-5)	9-13	(4-6)	#5, #6
3/32	(2.4)	150-250	15-30	13-17	(6-8)	11-15	(5-7)	#6, #7, #8
1/8	(3.2)	250-400	25-40	15-23	(7-11)	11-15	(5-7)	
5/32	(4.0)	400-500	40-55	21-25	(10-12)	13-17	(6-8)	#8, #10
3/16	(4.8)	500-750	55-80	23-27	(11-13)	18-22	(8-10)	
1/4	(6.4)	750-1000	80-125	28-32	(13-15)	23-27	(11-13)	

(1) When used with argon gas. The current ranges shown must be reduced when using argon/helium or pure helium shielding gases.
(2) Tungsten electrodes are classified as follows by the American Welding Society (AWS):

Pure	EWP
1% Thoriated	EWTh-1
2% Thoriated	EWTh-2

Though not yet recognized by the AWS, Ceriated Tungsten is now widely accepted as a substitute for 2% Thoriated Tungsten in AC and DC applications.
(3) DCEP is not commonly used in these sizes.
(4) TIG torch nozzle "sizes" are in multiples of 1/16ths of an inch:

# 4 = 1/4 in.	(6 mm)
# 5 = 5/16 in.	(8 mm)
# 6 = 3/8 in.	(10 mm)
# 7 = 7/16 in.	(11 mm)
# 8 = 1/2 in.	(12.5 mm)
#10 = 5/8 in.	(16 mm)

(5) TIG torch nozzles are typically made from alumina ceramic. Special applications may require lava nozzles, which are less prone to breakage, but cannot withstand high temperatures and high duty cycles.

WIRE WELDING-CV

Connect a wire feeder to the DUAL VANTAGE® 800-I according to the instructions in INSTALLATION INSTRUCTIONS Section.

The DUAL VANTAGE® 800-I in the CV-WIRE mode, permits it to be used with a broad range of flux cored wire (Innershield and Outershield) electrodes and solid wires for MIG welding (gas metal arc welding). Welding can be finely tuned using the ARC CONTROL. Turning the ARC CONTROL clockwise from –10 (soft) to +10 (crisp) changes the arc from soft and washed-in to crisp and narrow. It acts as an inductance/pinch control. The proper setting depends on the procedure and operator preference. Start with the dial set at 0.

ARC GOUGING

The DUAL VANTAGE® 800-I can be used for arc gouging. The minimum output in the arc gouging mode is 200 Amps. For arc gouging below 200 Amps use the CC-Stick Mode. For optimal performance, set the MODE per **Table B.4.**

The maximum output rating in GOUGE mode is 800A.

Set the OUTPUT CONTROL knob to adjust output current to the desired level for the gouging electrode being used according to the ratings in the following **Table B.4.**

TABLE B.4

Carbon Diameter	Current Range (DC, electrode positive)	Mode	Operator Mode
1/8"(3.2mm)	60-90 Amps	CC-STICK	Single/Dual
5/32"(4.0mm)	90-150 Amps	CC-STICK	Single/Dual
3/16"9(4.8mm)	200-250 Amps	ARC GOUGE	Single/Dual
1/4"(6.4mm)	300-400 Amps	ARC GOUGE	Single/Dual
3/8"(10.0mm)	400-600 Amps	ARC GOUGE	Single Only
1/2"(13.0mm)	600-MAX. Amps	ARC GOUGE	Single Only

The ARC CONTROL is not active in the ARC GOUGING Mode. The ARC CONTROL is automatically set to maximum when the ARC GOUGING mode is selected which provides the best ARC GOUGING performance.

PARALLELING

When paralleling machines in order to combine their outputs, all units must be operated in the CC-STICK mode only at the same output settings. To achieve this, turn the WELD MODE switch to the CC-STICK position. Operation in other modes may produce erratic outputs, and large output imbalances between the units.

AUXILIARY POWER OPERATION

Start the engine and set the IDLER control switch to the desired operating mode. Full power is available regardless of the welding control settings, if no welding current is being drawn.

SIMULTANEOUS WELDING AND AUXILIARY POWER LOADS

It must be noted that the above auxiliary power ratings are with no welding load.

Simultaneous welding and power loads are specified in Table B.5.

TABLE B.5 DUAL VANTAGE® 800-I SIMULTANEOUS WELDING AND POWER LOADS

WELD AMPS		1 PHASE (120V) WATTS	AMPS
0		7,200	30
100		7,200	30
200	PLUS	7,200	30
300		7,200	30
400		7,200	30
500		6,400	26
600		0	0

TABLE B.6 DUAL VANTAGE® 800-I Extension Cord Length Recommendations
(Use the shortest length extension cord possible sized per the following table.)

Current (Amps)	Voltage (Volts)	Load (Watts)	Maximum Allowable Cord Length in m (ft.) for Conductor Size											
			2.5²mm	14AWG	4.0²mm	12AWG	6.0²mm	10AWG	10.0²mm	8AWG	16.0²mm	6AWG	25.0²mm	4AWG
15	240	3,600	18	(60)	23	(75)	46	(150)	69	(225)	107	(350)	183	(600)
Conductor size is based on maximum 2.0% voltage drop.														

ACCESSORIES

OPTIONAL FIELD INSTALLED ACCESSORIES

K2637-2 Large Trailer

K2639-1 Fender Kit

K2640-1 Cable Rack

K2641-2 Four Wheel Trailer

K857 Remote Control

K857-1 Remote Control

K2642-1 Polarity Multiprocess Switch

K2663-1 Docking Kit

K2613-5A1 Ln-25 PRO with K126 PRO Gun

K126-12 K126 PRO Gun

KP1696-068 Drive Roll Kit

K12038-2 Invertec PC610 Plasma

K12048-1 Tomahawk 1025 Plasma

KA1452-12 Pigtail

KA1452-4 Extension Lead 10m

KA1452-13 Extension Lead 20m

KA1452-9 Work Return Lead 9m

KA1452-10 Electrode Lead 10mRoll Frame/Spill Tray Air Dryer Kit

MAINTENANCE

SAFETY PRECAUTIONS

⚠ WARNING

- **Have qualified personnel do all maintenance and troubleshooting work.**
- **Turn the engine off before working inside the machine or servicing the engine.**
- **Remove guards only when necessary to perform maintenance and replace them when the maintenance requiring their removal is complete. If guards are missing from the machine, obtain replacements from a Lincoln Distributor. (See Operating Manual Parts List.)**

Read the Safety Precautions in the front of this manual and in the Engine Owner's Manual before working on this machine.

Keep all equipment safety guards, covers, and devices in position and in good repair. Keep hands, hair, clothing, and tools away from the gears, fans, and all other moving parts when starting, operating, or repairing the equipment.

ROUTINE AND PERIODIC MAINTENANCE

DAILY

- Check the Engine oil levels.
- Refill the fuel tank to minimize moisture condensation in the tank.
- Open the water drain valve located on the bottom of the water separator element 1 or 2 turns and allow to drain into a container suitable for diesel fuel for 2 to 3 seconds. Repeat the above drainage procedure until diesel fuel is detected in the container.
- Check coolant level in the coolant recovery bottle.

WEEKLY

Blow out the machine with low pressure air periodically. In particularly dirty locations, and the radiator, this may be required once a week.

ENGINE MAINTENANCE

Refer to the "Periodic Checks" section of the Engine Operator's Manual for the recommended maintenance schedule of the following:

a) Engine Oil and Filter
b) Air Cleaner
c) Fuel Filter - and Delivery System
d) Alternator Belt
e) Battery
f) Cooling System

Refer to Table D.1 at the end of this section for various engine maintenance components.

AIR FILTER

⚠ CAUTION

- **Excessive air filter restriction will result in reduced engine life.**

⚠ WARNING

- **Never use gasoline or low flash point solvents for cleaning the air cleaner element. A fire or explosion could result.**

⚠ CAUTION

- **Never run the engine without the air cleaner. Rapid engine wear will result from contaminants, such as dust and dirt being drawn into the engine.**

The diesel engine is equipped with a dry type air filter. Never apply oil to it. Service the air cleaner as follows:

Replace the element as indicated by the service indicator. (See Service Instructions and Installation Tips for Engine Air Filter.)

Service Instructions

Single- and Two-Stage Engine Air Cleaners

1 Remove the Filter

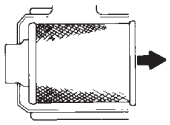

Rotate the filter while pulling straight out.

Unfasten or unlatch the service cover. Because the filter fits tightly over the outlet tube to create the critical seal, there will be some initial resistance, similar to breaking the seal on a jar. Gently move the end of the filter back and forth to break the seal then rotate while pulling straight out. Avoid knocking the filter against the housing.

If your air cleaner has a safety filter, replace it every third primary filter change. Remove the safety filter as you would the primary filter. Make sure you cover the air cleaner outlet tube to avoid any unfiltered contaminant dropping into the engine.

2 Clean Both Surfaces of the Outlet Tube and Check the Vacuator™ Valve

Use a clean cloth to wipe the filter sealing surface and the inside of the outlet tube. Contaminant on the sealing surface could hinder an effective seal and cause leakage. Make sure that all contaminant is removed before the new filter is inserted. Dirt accidently transferred to the inside of the outlet tube will reach the engine and cause wear. Engine manufacturers say that it takes only a few grams of dirt to "dust" an engine! Be careful not to damage the sealing area on the tube.

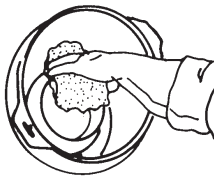

Outer edge of the outlet tube

Wipe both sides of the outlet tube clean.

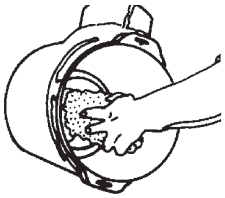

Inner edge of the outlet tube

If your air cleaner is equipped with a Vacuator Valve
Visually check and physically squeeze to make sure the valve is flexible and not inverted, damaged or plugged.

3 Inspect the Old Filter for Leak Clues

Visually inspect the old filter for any signs of leaks. A streak of dust on the clean side of the filter is a telltale sign. Remove any cause of leaks before installing new filter.

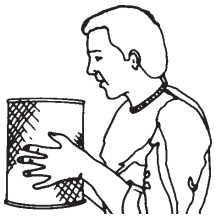

4 Inspect the New Filter for Damage

Inspect the new filter carefully, paying attention to the inside of the open end, which is the sealing area. NEVER install a damaged filter. A new Donaldson radial seal filter may have a dry lubricant on the seal to aid installation.

5 Insert the New Radial Seal Filter Properly

If you're servicing the safety filter, this should be seated into position before installing the primary filter.

Insert the new filter carefully. Seat the filter by hand, making certain it is completely into the air cleaner housing before securing the cover in place.

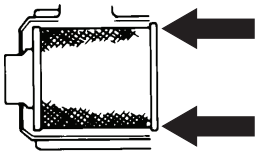

The critical sealing area will stretch slightly, adjust itself and distribute the sealing pressure evenly. To complete a tight seal, apply pressure by hand at the outer rim of the filter, not the flexible center. (Avoid pushing on the center of the urethane end cap.) No cover pressure is required to hold the seal. NEVER use the service cover to push the filter into place! Using the cover to push the filter in could cause damage to the housing, cover fasteners and will void the warranty.

If the service cover hits the filter before it is fully in place, remove the cover and push the filter (by hand) further into the air cleaner and try again. The cover should go on with no extra force.

Once the filter is in place, secure the service cover.

Caution

NEVER use the service cover to push the filter into place! Using the cover to push the filter in could cause damage to the housing, cover fasteners and will void the warranty.

6 Check Connectors for Tight Fit

Make sure that all mounting bands, clamps, bolts, and connections in the entire air cleaner system are tight. Check for holes in piping and repair if needed. Any leaks in your intake piping will send dust directly to the engine!

FUEL FILTERS

⚠ WARNING

When working on the fuel system:

- **Keep naked lights away, do not smoke!**
- **Do not spill fuel!**

The DUAL VANTAGE® 800-I is equipped with a **Fuel Filter** located after the lift pump and before fuel injectors.The procedure for changing the filter is as follows.

1. Close the fuel shutoff valve.
2. Clean the area around the fuel filter head. Remove the filter. Clean the gasket surface of the filter head and replace the o-ring.
3. Fill the clean filter with clean fuel, and lubricate the o-ring seal with clean lubricating oil.
4. Install the filter as specified by the filter manufacturer.

⚠ WARNING

Mechanical overtightening will distort the threads, filter element seal or filter can.

COOLING SYSTEM

The DUAL VANTAGE® 800-I is equipped with a pressure radiator. Keep the radiator cap tight to prevent loss of coolant. Clean and flush the coolant system periodically to prevent clogging the passage and overheating the engine. When antifreeze is needed, always use the permanent type.

- Every 500 hours check radiator to ensure there is no fin blockage or leaks. Clean as necessary with an environmentally friendly degreaser and low pressure water.
- Check coolant recovery bottle every 100 hours for sufficient coolant. With engine hot and off, level should be at maximum.
- When draining the entire contents of the system, remove radiator cap and open vent cock on top of tank (counter clockwise). Next, pull both drain hoses through the access hole in the base and open both valves until system is empty.
- When refilling, close both valves on drain hoses and open vent cock on top of tank to vent air from system fully. Close vent cock when done. (See **Figure D.1**)

FIGURE D.1

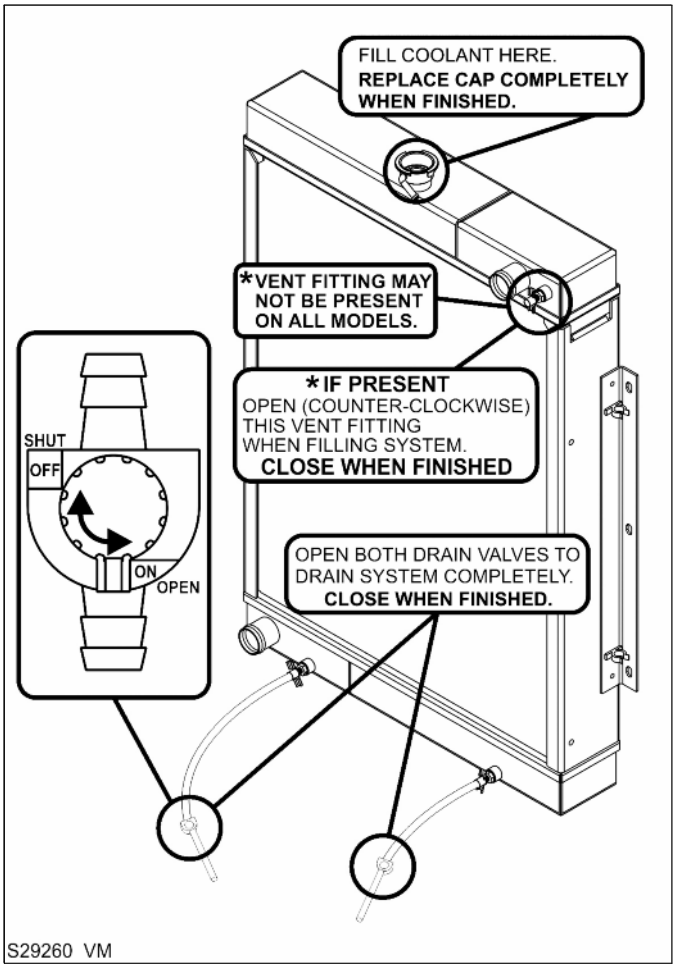

BATTERY HANDLING

GASES FROM BATTERY can explode.

- **Keep sparks, flame and cigarettes away from battery.**

To prevent EXPLOSION when:

- **INSTALLING A NEW BATTERY - disconnect negative cable from old battery first and connect to new battery last.**

- **CONNECTING A BATTERY CHARGER - Remove battery from welder by disconnecting negative cable first, then positive cable and battery clamp. When reinstalling, connect negative cable last. Keep well ventilated.**

- **USING A BOOSTER - connect positive lead to battery first then connect negative lead to engine foot.**

BATTERY ACID CAN BURN EYES AND SKIN.

- **Wear gloves and eye protection and be careful when working near battery. Follow instructions printed on battery.**

PREVENTING ELECTRICAL DAMAGE

1. When replacing, jumping, or otherwise connecting the battery to the battery cables, the proper polarity must be observed. Failure to observe the proper polarity could result in damage to the charging circuit. The positive (+) battery cable has a red terminal cover.
2. If the battery requires charging from an external charger, disconnect the negative battery cable first and then the positive battery cable before attaching the charger leads. Failure to do so can result in damage to the internal charger components. When reconnecting the cables, connect the positive cable first and the negative cable last.

PREVENTING BATTERY DISCHARGE

Turn the RUN/STOP switch to stop when engine is not running.

PREVENTING BATTERY BUCKLING

Tighten nuts on battery clamp until snug.

CHARGING THE BATTERY

When you charge, jump, replace, or otherwise connect battery cables to the battery, be sure the polarity is correct. Improper polarity can damage the charging circuit. The DUAL VANTAGE® 800-I positive (+) battery terminal has a red terminal cover.

If you need to charge the battery with an external charger, disconnect the negative cable first, then the positive cable before you attach the charger leads.

After the battery is charged, reconnect the positive battery cable first and the negative cable last. Failure to do so can result in damage to the internal charger components.

Follow the instructions of the battery charger manufacturer for proper charger settings and charging time.

SERVICING MUFFLER WITH INTERNAL SPARK ARRESTOR

⚠ CAUTION

- **Wear suitable personal protective equipment.**

Clean every 100 hours. Remove screw plug on muffler body. Place a metallic container under the plug boss and run the machine until no more debris comes out.

⚠ WARNING

- **MUFFLER MAY BE HOT**
- **ALLOW ENGINE TO COOL BEFORE INSTALLING THE SPARK ARRESTER!**
- **DO NOT OPERATE ENGINE WHILE INSTALLING THE SPARK ARRESTOR!**

NAMEPLATES / WARNING DECALS MAINTENANCE

Whenever routine maintenance is performed on this machine - or at least yearly - inspect all nameplates and labels for legibility. Replace those which are no longer clear. Refer to the parts list for the replacement item number.

WELDER / GENERATOR MAINTENANCE

STORAGE

Store the DUAL VANTAGE® 800-I in clean, dry, protected areas.

CLEANING

Blow out the generator and controls periodically with low pressure air. Do this at least once a week in particularly dirty areas.

BRUSH REMOVAL AND REPLACEMENT

It is normal for the brushes and slip rings to wear and darken slightly. Inspect the brushes when a generator overhaul is necessary.

⚠ WARNING

Do not attempt to polish slip rings while the engine is running.

Table D.1 Engine Maintenance Components

ITEM	MAKE	PART NUMBER	SERVICE INTERVAL
Air Cleaner Element (Engine)	Donaldson	P822768	(With Service Indicator) Clean as Needed, Replace as indicated by Service Indicator.
Oil Filter	Cummins Fleetguard	C6002112110 LF16011	Replace every 250 hours or 3 months, whichever is less.
Fan Belt	Cummins	C0412021749	Inspect every 1000 hours or 12 months, whichever is less.
Fuel Strainer	Cummins Fleetguard	3826094 FF5079	Inspect and Replace monthly as required. Replace annually.
Fuel Filter / Water Separator	Fleetguard	FS19594	Replace every 500 hours or 6 months, whichever is less.
Battery	-----	BCI GROUP 34	Inspect every 500 hours
Engine Oil Change	See Manual	-----	Change every 250 hours or 3 months, whichever is less. Check daily.

GFCI TESTING AND RESETTING PROCEDURE

The GFCI should be properly tested at least once every month or whenever it is tripped. To properly test and reset the GFCI:

- If the GFCI has tripped, first carefully remove any load and check it for damage.
- If the equipment has been shut down, it must be restarted.
- The equipment needs to be operating at high idle speed and any necessary adjustments made on the control panel so that the equipment is providing at least 80 volts to the receptacle input terminals.
- The circuit breaker for this receptacle must not be tripped. Reset if necessary.
- Push the "Reset" button located on the GFCI. This will assure normal GFCI operation.
- Plug a night-light (with an "ON/OFF" switch) or other product (such as a lamp) into the Duplex receptacle and turn the product "ON".
- Push the "Test" button located on the GFCI. The night-light or other product should go "OFF".
- Push the "Reset" button, again. The light or other product should go "ON" again.

If the light or other product remains "ON" when the "Test" button is pushed, the GFCI is not working properly or has been incorrectly installed (miswired). If your GFCI is not working properly, contact a qualified, certified electrician who can assess the situation, rewire the GFCI if necessary or replace the device.

For GFCI Models that have the appearance as shown in Figure D.2, please use the following information and troubleshooting guide listed below. For all other GFCI models, please use the GFCI testing and resetting procedure listed previously.

FIGURE D.2

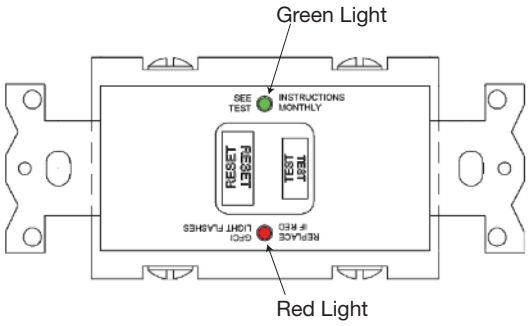

- The GFCI automatically monitors ground fault circuit interrupting functionality every (3) hours or less, and it also automatically tests within (5) seconds of power to the device.
- If the GFCI device can no longer provide GFCI protection it will deny power and provide a visual indication that it no longer can provide protection.

TROUBLESHOOTING GUIDELINES:

- If the line conductor is incorrectly wired to the load terminal, power to the receptacle will be denied. This includes initial installation and any subsequent reinstallations.
- Visual indicators: Green LED on represents power at the face of the receptacle; solid Red LED on indicates a trip condition and load is off. A flashing red LED indicates that the GFCI is no longer functioning and needs replaced.
- Reverse Wire Safety Feature: The GFCI will not have power at both the face and downstream if the line and load are reverse wired. Additionally, the unit will not be able to reset under a reversed wiring condition. If the line conductor is incorrectly wired to the load terminal, power to the receptacle will be denied. This includes initial installation and any subsequent reinstallations.
- (GFCI no longer functioning): A rapid flashing red LED will indicate that the unit can no longer provide ground fault protection. This indication will occur regardless of the specific test mode that is being conducted, automatic or manual.
- If your GFCI is no longer working properly, contact a qualified, certified electrician who can assess the situation and rewire the GFCI if necessary or replace the device.

TROUBLESHOOTING

HOW TO USE TROUBLESHOOTING GUIDE

⚠ WARNING

Service and Repair should only be performed by Lincoln Electric Factory Trained Personnel. Unauthorized repairs performed on this equipment may result in danger to the technician and machine operator and will invalidate your factory warranty. For your safety and to avoid Electrical Shock, please observe all safety notes and precautions detailed throughout this manual.

This Troubleshooting Guide is provided to help you locate and repair possible machine malfunctions. Simply follow the three-step procedure listed below.

Step 1. LOCATE PROBLEM (SYMPTOM).
Look under the column labeled “PROBLEM (SYMPTOMS)”. This column describes possible symptoms that the machine may exhibit. Find the listing that best describes the symptom that the machine is exhibiting.

Step 2. POSSIBLE CAUSE.
The second column labeled “POSSIBLE CAUSE” lists the obvious external possibilities that may contribute to the machine symptom.

Step 3. RECOMMENDED COURSE OF ACTION
This column provides a course of action for the Possible Cause, generally it states to contact your local Lincoln Authorized Field Service Facility.

If you do not understand or are unable to perform the Recommended Course of Action safely, contact your local Lincoln Authorized Field Service Facility.

⚠ CAUTION

If for any reason you do not understand the test procedures or are unable to perform the tests/repairs safely, contact your **Local Lincoln Authorized Field Service Facility** for technical troubleshooting assistance before you proceed.

Observe all Safety Guidelines detailed throughout this manual

PROBLEMS (SYMPTOMS)	POSSIBLE CAUSE	RECOMMENDED COURSE OF ACTION
Major Physical or Electrical Damage is Evident.	1. **Contact your local Lincoln Authorized Field Service Facility.**	If all recommended possible areas of misadjustment have been checked and the problem persists, **Contact your local Lincoln Authorized Field Service Facility.**
Engine will not crank	1. Battery low. 2. Loose battery cable connections which may need Inspected, cleaned or tighten. 3. Faulty wiring in engine starting circuit. 4. Faulty engine starter. Contact authorized local Engine Service Shop. 5. Battery disconnect switch is in the off position.	
Engine will crank but not start.	1. Out of fuel. 2. Fuel shut off valve is in the off position make sure the valve lever is in a vertical direction. 3. Engine shut down solenoid not pulling in. 4. On/Off switch on for more than 30 sec. before starting, the On/Off switch will need to be switch off and turned back on. 5. Fuel Filters dirty/clogged, main filter element and/or In-line Fuel Filter may need to be replaced. 6. High water temperature or low oil pressure. (engine protection light lit)	
Engine shuts down shortly after starting.	1. Low oil pressure (engine protection light lit). Check oil level (Consult engine service dealer). 2. High water temperature. Check engine cooling system. (engine protection light lit). 3. Faulty oil pressure switch. 4. Faulty water temperature switch. Contact authorized local Engine Service Shop.	
Engine shuts down while under a load.	1. High water temperature.	
Engine runs rough.	1. Dirty fuel or air filters may need cleaned/replaced. 2. Water in fuel.	
Engine will not shut off.	1. Fuel Shutdown solenoid not functioning properly / linkage binding.	

⚠ CAUTION

If for any reason you do not understand the test procedures or are unable to perform the tests/repairs safely, contact your **Local Lincoln Authorized Field Service Facility** for technical troubleshooting assistance before you proceed.

Observe all Safety Guidelines detailed throughout this manual

PROBLEMS (SYMPTOMS)	POSSIBLE CAUSE	RECOMMENDED COURSE OF ACTION
Battery does not stay charged.	1. Faulty battery . 2. Faulty engine alternator. 3. Loose or broken lead in charging circuit. 4. Loose fan belt may need tightening.	If all recommended possible areas of misadjustment have been checked and the problem persists, **Contact your local Lincoln Authorized Field Service Facility.**
Engine will not idle down to low speed.	1. Idler switch in HIGH idle position, make sure switch is set to AUTO. 2. External load on welder or auxiliary power. 3. Mechanical problem in idler solenoid linkage. 4. Faulty wiring in solenoid circuit. 5. No or low voltage @ idle solenoid 6. Faulty idler solenoid. 7. Faulty Weld Control PCB (Printed Circuit Board) or Engine Control Units.	
Engine will not go to high idle when attempting to weld.	1. Poor work lead connection to work. 2. Broken idler solenoid spring. 3. Welding Terminals switch in wrong position. 4. No open circuit voltage at output studs. 5. Faulty Engine Control Units or Weld Control PCB.	
Engine will not go to high idle when using auxiliary power.	1. Broken wire in auxiliary current sensor wiring. 2. Auxiliary power load is less than 100 watts. 3. Faulty Engine Control Units or Weld Control PCB.	
Engine goes to low idle but does not stay at low idle.	1. Faulty Idler / Engine Shutdown PCB or Weld Control PCB.	
No welding output or auxiliary output in Single Mode or Dual Mode.	1. Broken lead in one of the rotor circuits. 2. One of the field diode modules are faulty. 3. Faulty Weld Control PCB. 4. One of the rotors are faulty. 5. Faulty Selector Switch.	

⚠ CAUTION

If for any reason you do not understand the test procedures or are unable to perform the tests/repairs safely, contact your **Local Lincoln Authorized Field Service Facility** for technical troubleshooting assistance before you proceed.

Observe all Safety Guidelines detailed throughout this manual

PROBLEMS (SYMPTOMS)	POSSIBLE CAUSE	RECOMMENDED COURSE OF ACTION
Welder has some/ no output and no control. Auxiliary output OK.	1. Faulty remote kit. 2. Faulty output control potentiometer. 3. Faulty output control wiring. 4. Faulty Weld Control PCB, Engine Control Units or Chopper PCB.	If all recommended possible areas of misadjustment have been checked and the problem persists, **Contact your local Lincoln Authorized Field Service Facility.**
No welding output. Auxiliary output OK.	1. WELDING TERMINALS switch in wrong position, be sure switch is in WELDING TERMINALS ALWAYS ON position. 2. Faulty Weld Control PCB, Engine Control Units or Chopper PCB.	
No auxiliary power.	1. RCD may have tripped. 2. Open breakers may need to be reset. 3. Faulty receptacle. 4. Faulty auxiliary circuit wiring.	
Welder load drops off.	1. Check thermostat on each of the chopper module. 2. Check fan operation in power electronic component.	
Wire feeder does not work when control cable is connected to 14 pin connector.	1. Wire Feeder Power circuit breaker open. Check 42V or 115V breaker and reset if tripped. 2. Faulty control cable. Repair or replace cable. 3. Faulty wire feeder. Replace wire feeder.	
No output in Pipe Mode.	1. Make sure VRD ON/OFF toggle switch is in the “OFF” position. 2. Poor work lead connection to work. Make sure work clamp is tightly connected to clean base metal. 3. "Weld Terminals" switch in wrong position. Place switch in "Weld Terminals On" position when welding without control cable. 4. Faulty PC board or welder alternator.	
VRD Lights don’t light up.	1. Ensure VRD ON/OFF switch is in the “ON” position. 2. If light is burned out, replace both VRD lights. 3. Faulty OCV indicator PC board.	
Operator Selector Switch is not functioning properly	1. Microswitches on back of selector switch are bad. 2. Broken wired connection from microswitches to switching relays. 3. Mechanical switching relays are bad. 4. selector switch is bad.	

⚠ CAUTION

If for any reason you do not understand the test procedures or are unable to perform the tests/repairs safely, contact your **Local Lincoln Authorized Field Service Facility** for technical troubleshooting assistance before you proceed.

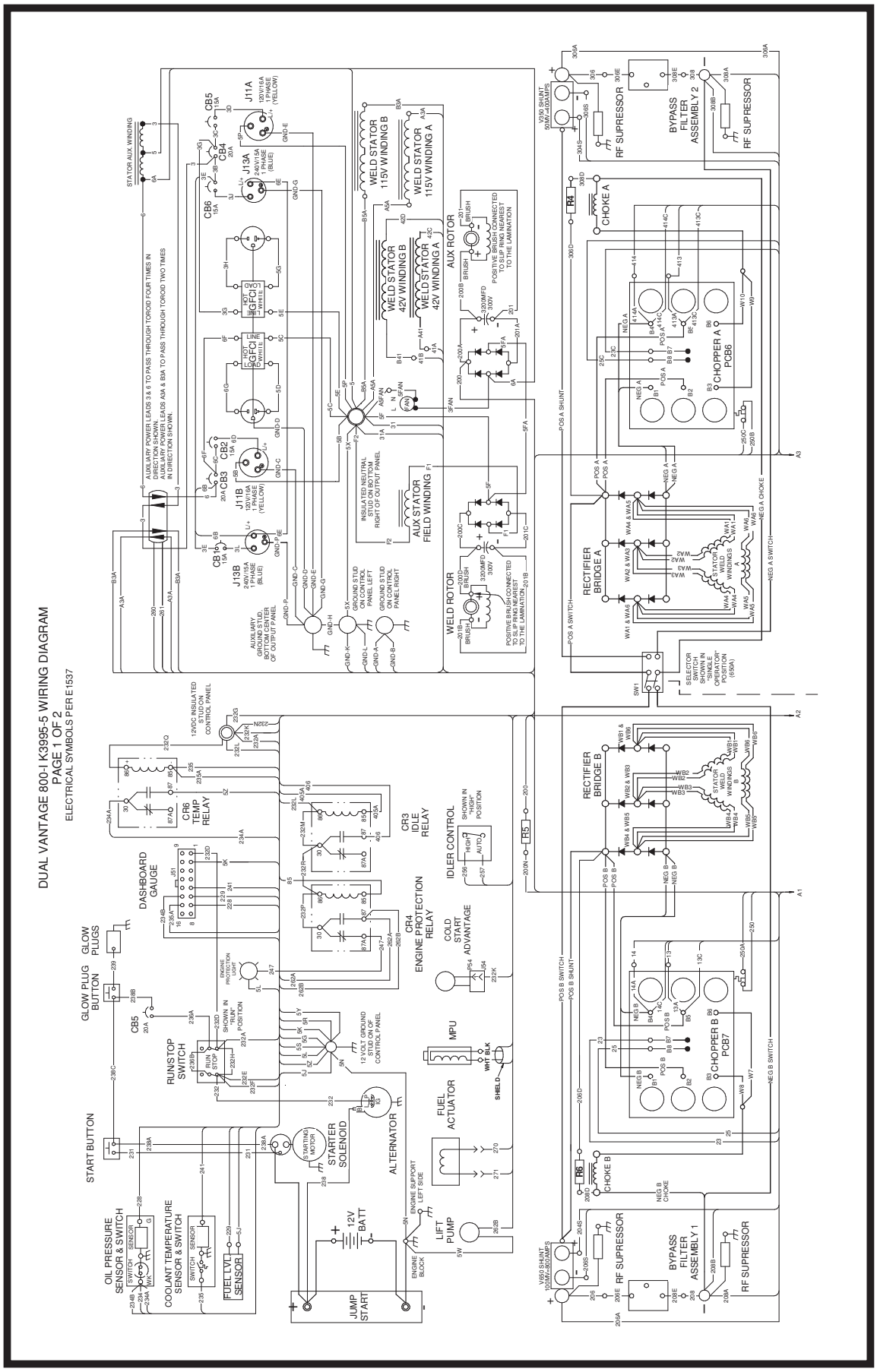

NOTE: This diagram is for reference only. It may not be accurate for all machines covered by this manual. The specific diagram for a particular code is included with the machine. If the diagram is illegible, write to the Service Department for a replacement. Give the equipment code number.

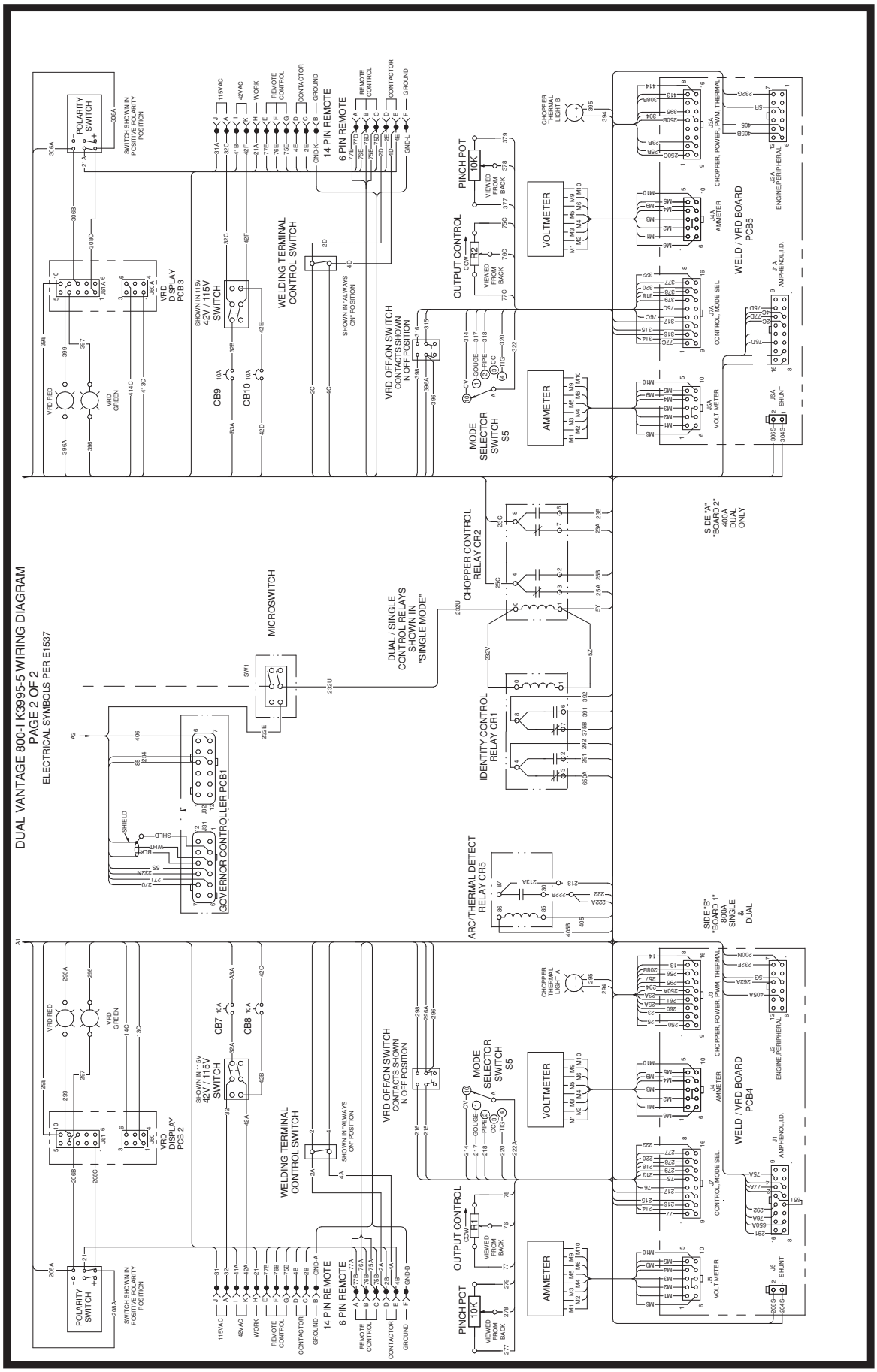

NOTE: This diagram is for reference only. It may not be accurate for all machines covered by this manual. The specific diagram for a particular code is included with the machine. If the diagram is illegible, write to the Service Department for a replacement. Give the equipment code number.

ENGINE WELDERS / K691-10 / K488 / K487 SPOOL GUN CONNECTION DIAGRAM

⚠ WARNING

- Do not operate with panels open.
- Disconnect NEGATIVE (-) Battery lead before servicing.
- Do not touch electrically live parts.

- Keep guards in place.
- Keep away from moving parts.
- Only qualified personnel should install,use or service this equipment.

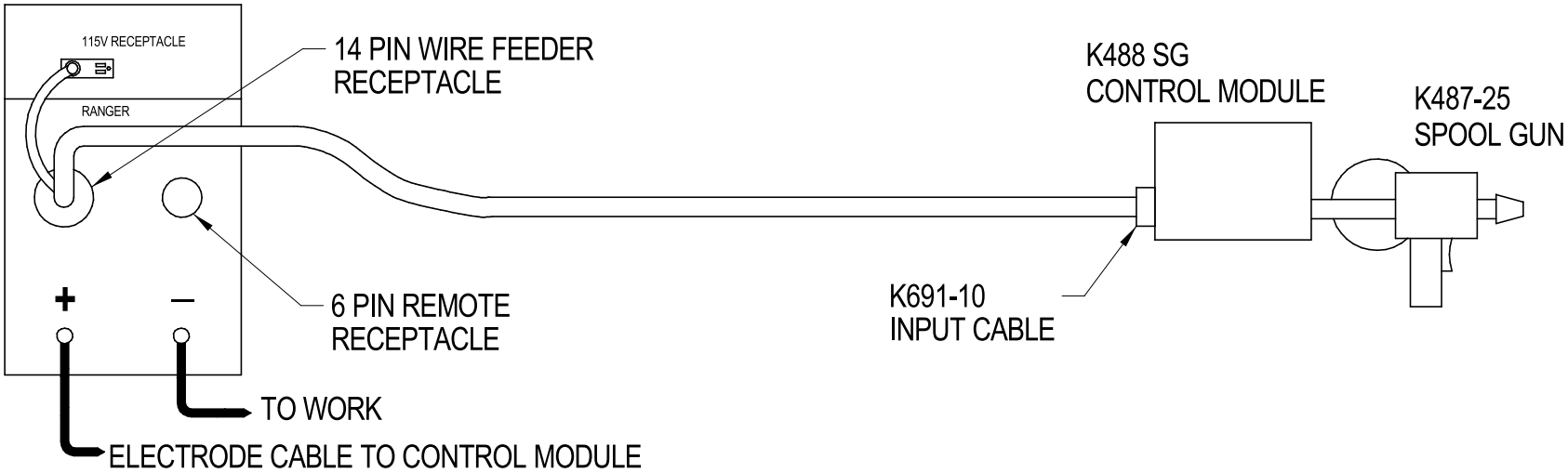

CAUTION: BE SURE THAT CONTROL MODULE MODE SWITCH IS IN THE "LINCOLN" (CONTACT CLOSURE) POSITION BEFORE ATTEMPTING TO OPERATE CONTROL MODULE. INCORRECT SWITCH POSITION COULD RESULT IN DAMAGE TO THE CONTROL MODULE AND/OR POWER SOURCE.

ANY INCREASE OF THE HIGH IDLE ENGINE RPM BY CHANGING THE GOVERNOR SETTING OR OVERRIDING THE THROTTLE LINKAGE WILL CAUSE AN INCREASE IN THE AC WIRE FEEDER VOLTAGE, WHICH CAN DAMAGE THE CONTROL CIRCUIT. THE ENGINE GOVERNOR SETTING IS PRE-SET AT THE FACTORY – DO NOT ADJUST ABOVE RPM SPECIFICATIONS LISTED IN THE ENGINE WELDER OPERATING MANUAL.

N.A. WELDING CABLES MUST BE SIZED FOR CURRENT AND DUTY CYCLE OF APPLICATION.
N.B. CONNECT WELDING CABLES TO OUTPUT STUDS FOR DESIRED POLARITY.
N.C. PLACE THE MODE SWITCH IN THE "CV-WIRE" POSITION. PLACE WELDING TERMINALS SWITCH TO "REMOTELY CONTROLLED" POSITION.
N.D. PLACE IDLER SWITCH IN "HIGH" IDLE POSITION.

10-27-2000

S24787-8

ENGINE WELDERS / K867 / K775 / LN-7 CONNECTION DIAGRAM

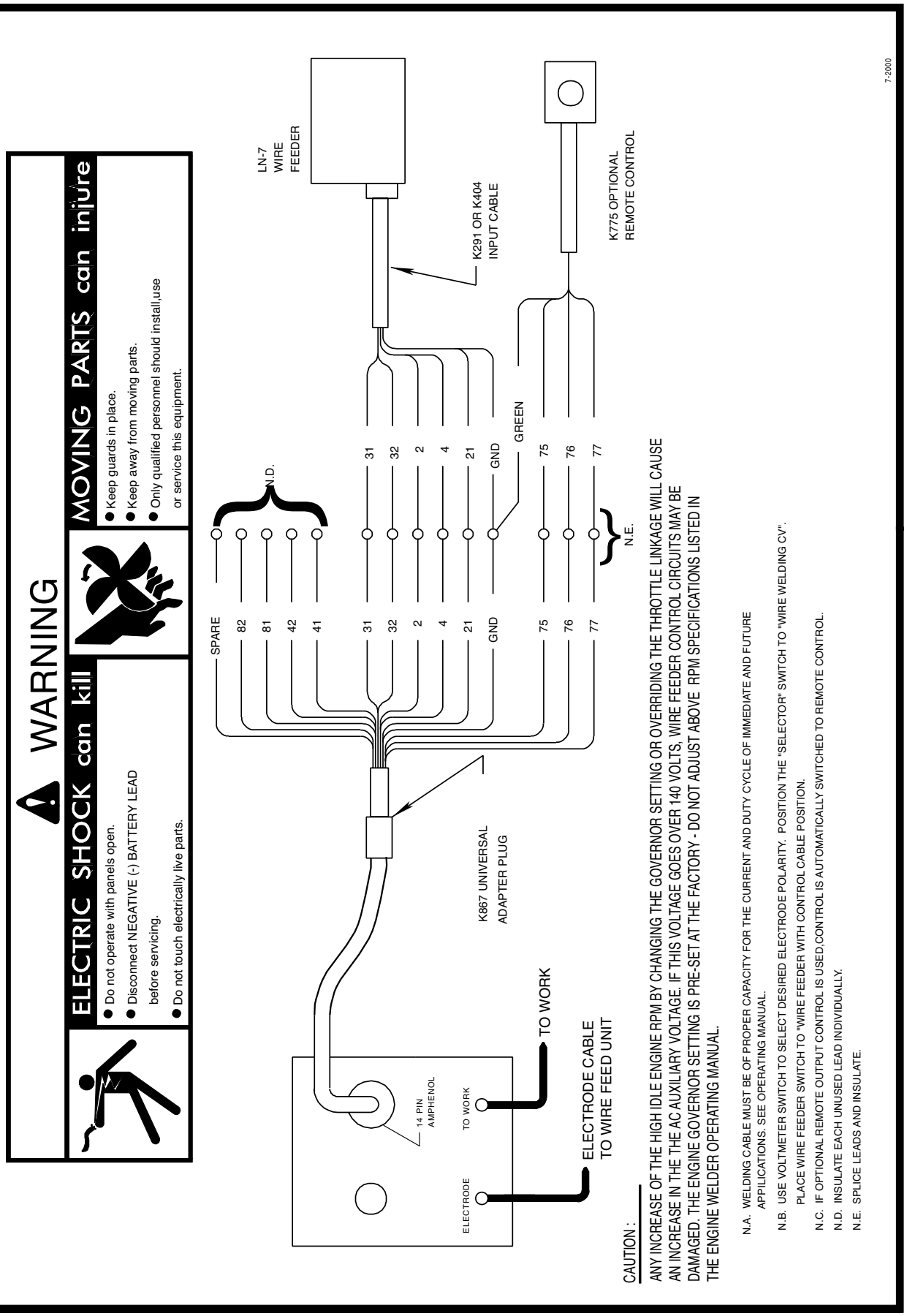

ENGINE WELDERS /LN-7 CONNECTION DIAGRAM

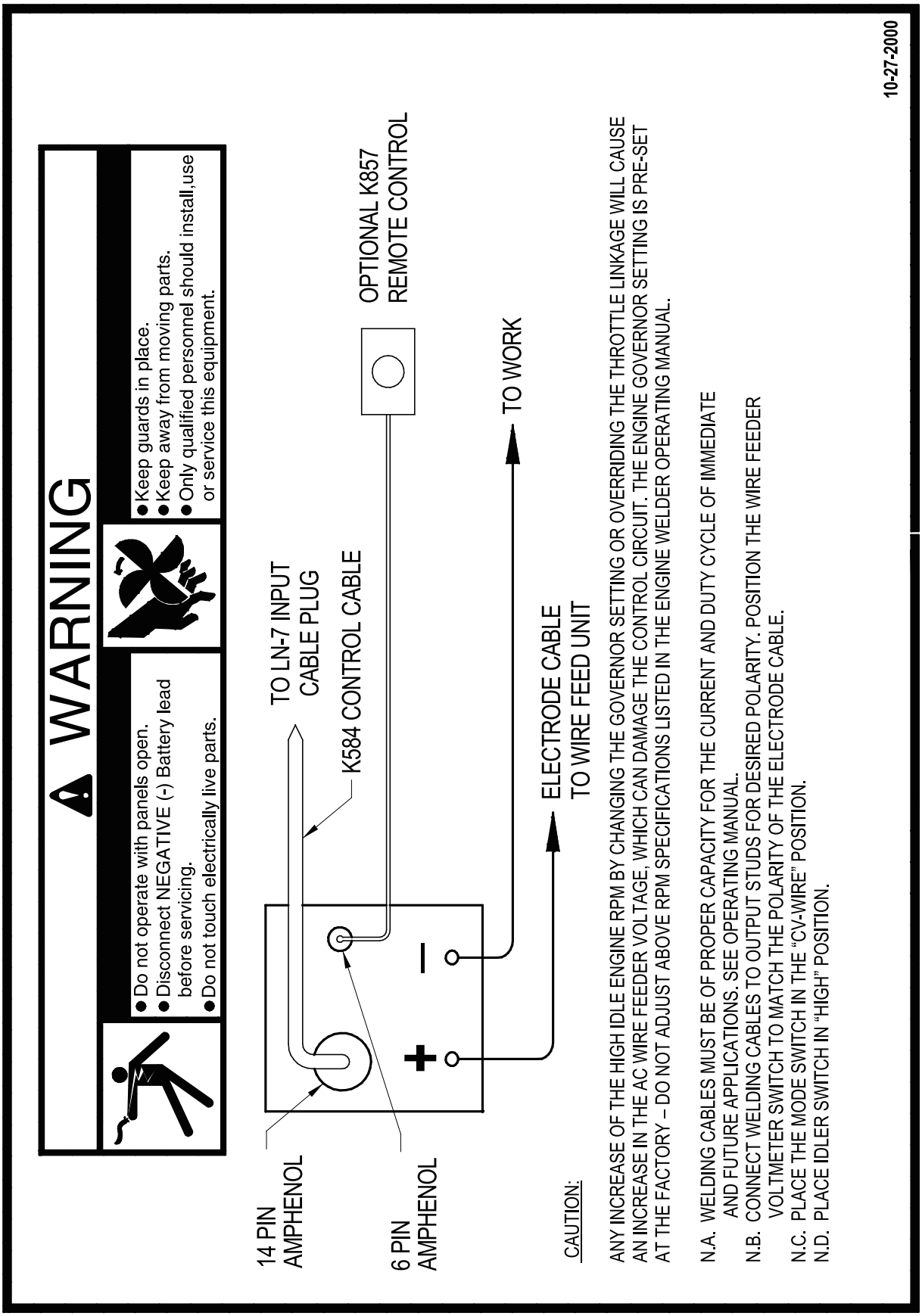

ENGINE WELDERS TO K867 CONTROL CABLE ADAPTER CONNECTION DIAGRAM

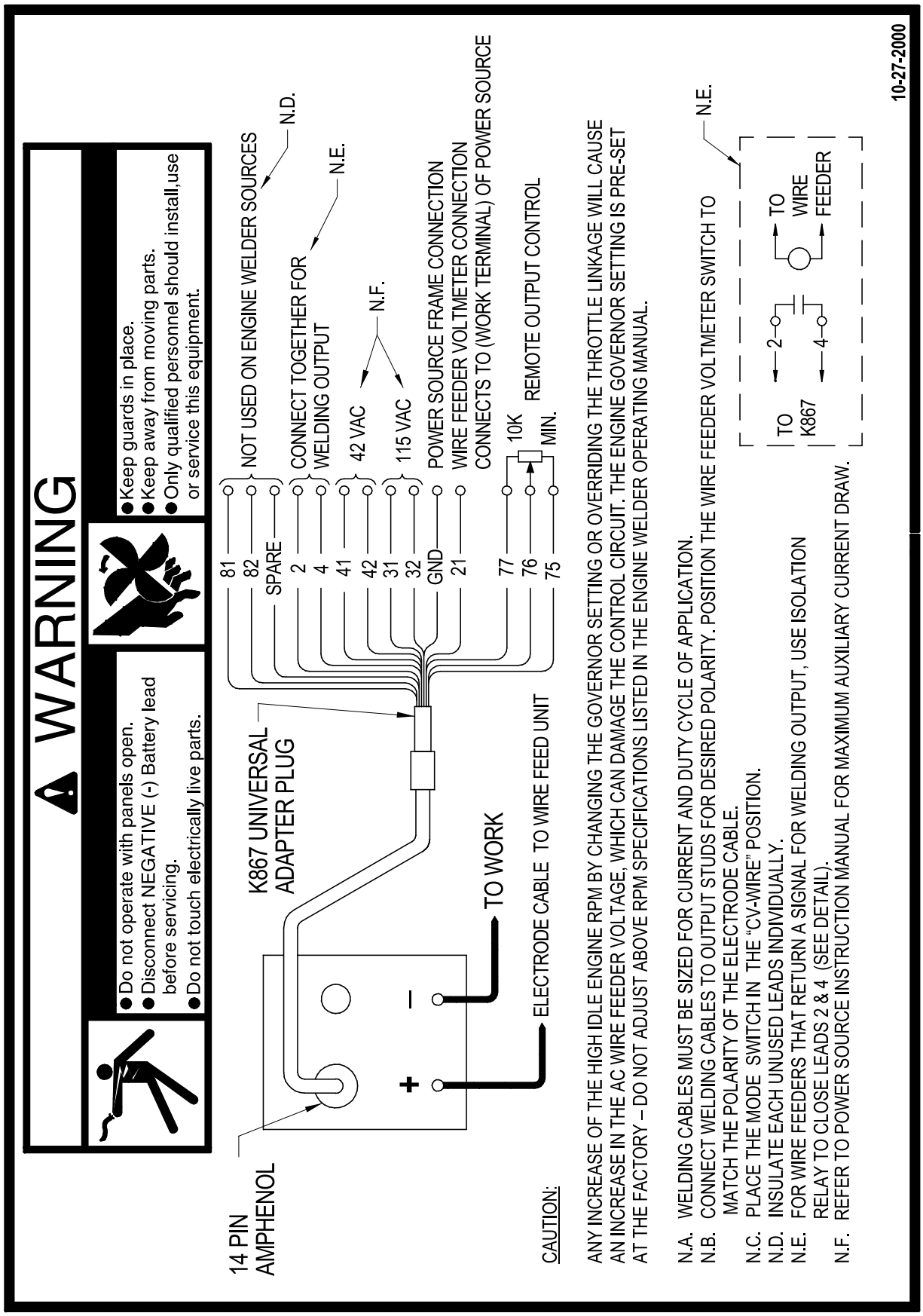

CAUTION:

ANY INCREASE OF THE HIGH IDLE ENGINE RPM BY CHANGING THE GOVERNOR SETTING OR OVERRIDING THE THROTTLE LINKAGE WILL CAUSE AN INCREASE IN THE AC WIRE FEEDER VOLTAGE, WHICH CAN DAMAGE THE CONTROL CIRCUIT. THE ENGINE GOVERNOR SETTING IS PRE-SET AT THE FACTORY – DO NOT ADJUST ABOVE RPM SPECIFICATIONS LISTED IN THE ENGINE WELDER OPERATING MANUAL.

N.A. WELDING CABLES MUST BE SIZED FOR CURRENT AND DUTY CYCLE OF APPLICATION.
N.B. CONNECT WELDING CABLES TO OUTPUT STUDS FOR DESIRED POLARITY. POSITION THE WIRE FEEDER VOLTMETER SWITCH TO MATCH THE POLARITY OF THE ELECTRODE CABLE.
N.C. PLACE THE MODE SWITCH IN THE "CV-WIRE" POSITION.
N.D. INSULATE EACH UNUSED LEADS INDIVIDUALLY.
N.E. FOR WIRE FEEDERS THAT RETURN A SIGNAL FOR WELDING OUTPUT, USE ISOLATION RELAY TO CLOSE LEADS 2 & 4 (SEE DETAIL).
N.F. REFER TO POWER SOURCE INSTRUCTION MANUAL FOR MAXIMUM AUXILIARY CURRENT DRAW.

ENGINE WELDERS / K867 / LN-8 CONNECTION DIAGRAM

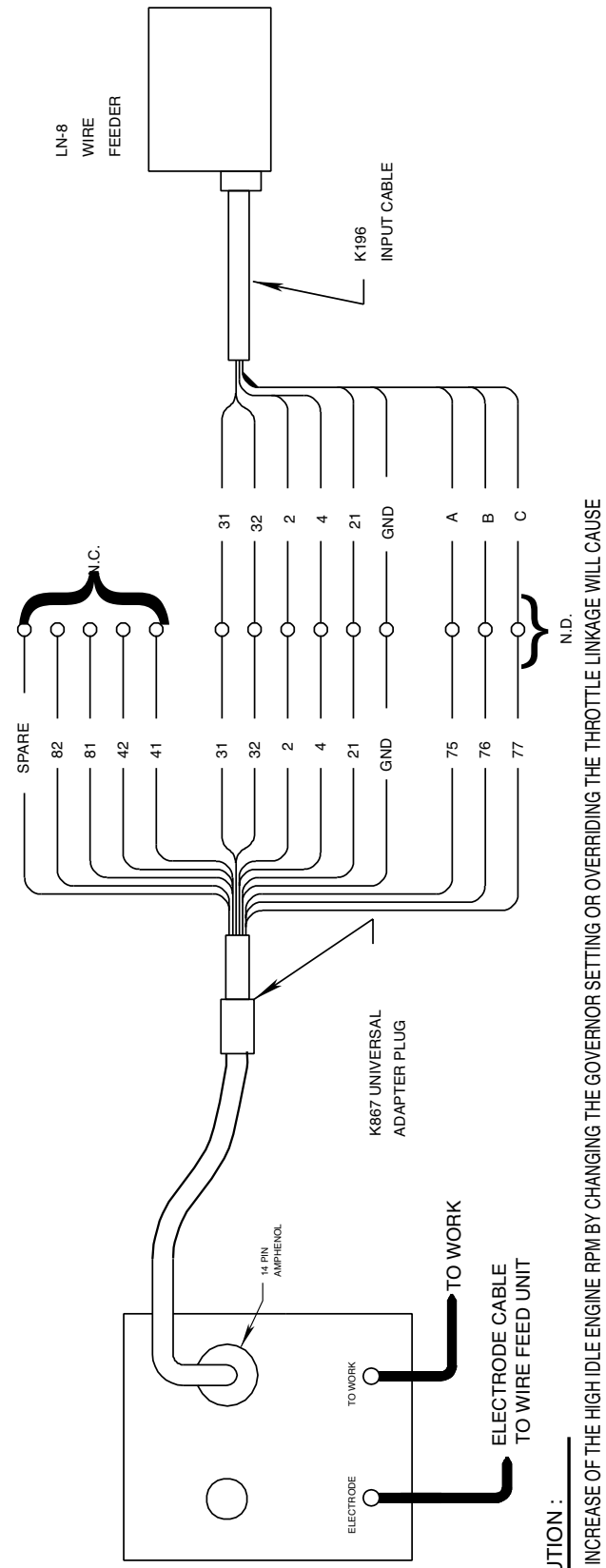

CAUTION :

ANY INCREASE OF THE HIGH IDLE ENGINE RPM BY CHANGING THE GOVERNOR SETTING OR OVERRIDING THE THROTTLE LINKAGE WILL CAUSE AN INCREASE IN THE THE AC AUXILIARY VOLTAGE. IF THIS VOLTAGE GOES OVER 140 VOLTS, WIRE FEEDER CONTROL CIRCUITS MAY BE DAMAGED. THE ENGINE GOVERNOR SETTING IS PRE-SET AT THE FACTORY - DO NOT ADJUST ABOVE RPM SPECIFICATIONS LISTED IN THE ENGINE WELDER OPERATING MANUAL.

N.A. WELDING CABLE MUST BE OF PROPER CAPACITY FOR THE CURRENT AND DUTY CYCLE OF IMMEDIATE AND FUTURE APPICATIONS. SEE OPERATING MANUAL.

N.B. USE VOLTMETER SWITCH TO SELECT DESIRED ELECTRODE POLARITY. POSITION THE SELECTOR SWITCH TO "WIRE WELDING CV".

N.C. INSULATE EACH UNUSED LEAD INDIVIDUALLY.

N.D. SPLICE LEADS AND INSULATE.

7-2000

S23989

ENGINE WELDERS /LN-25 ACROSS THE ARC CONNECTION DIAGRAM WITH OPTIONAL K857 REMOTE CONTROL

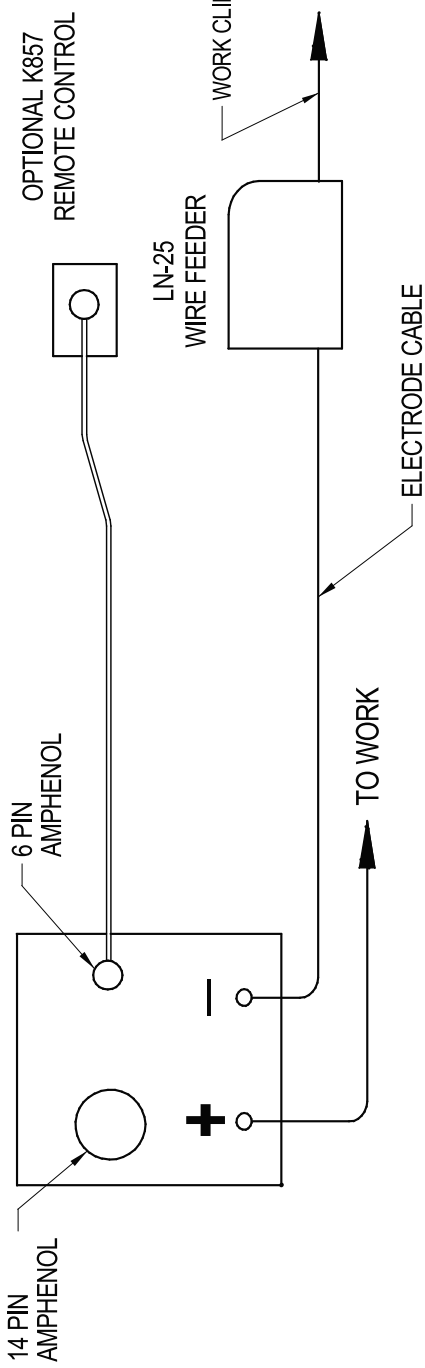

N.A. WELDING CABLES MUST BE OF PROPER CAPACITY FOR THE CURRENT AND DUTY CYCLE OF IMMEDIATE AND FUTURE APPLICATIONS. SEE OPERATING MANUAL.

N.B. CONNECT WELDING CABLES TO OUTPUT STUDS FOR DESIRED POLARITY. POSITION THE WIRE FEEDER VOLTMETER SWITCH TO MATCH THE POLARITY OF THE ELECTRODE CABLE.

N.C. PLACE THE MODE SWITCH IN THE “CV-WIRE” POSITION.

N.D. PLACE THE WELDING TERMINALS SWITCH IN THE “WELD TERMINALS ON” POSITION.

N.E. PLACE IDLER SWITCH IN “AUTO” OR “HIGH” IDLE POSITION AS DESIRED.

10-27-2000

S24787-1

ENGINE WELDERS /LN-8 CONNECTION DIAGRAM

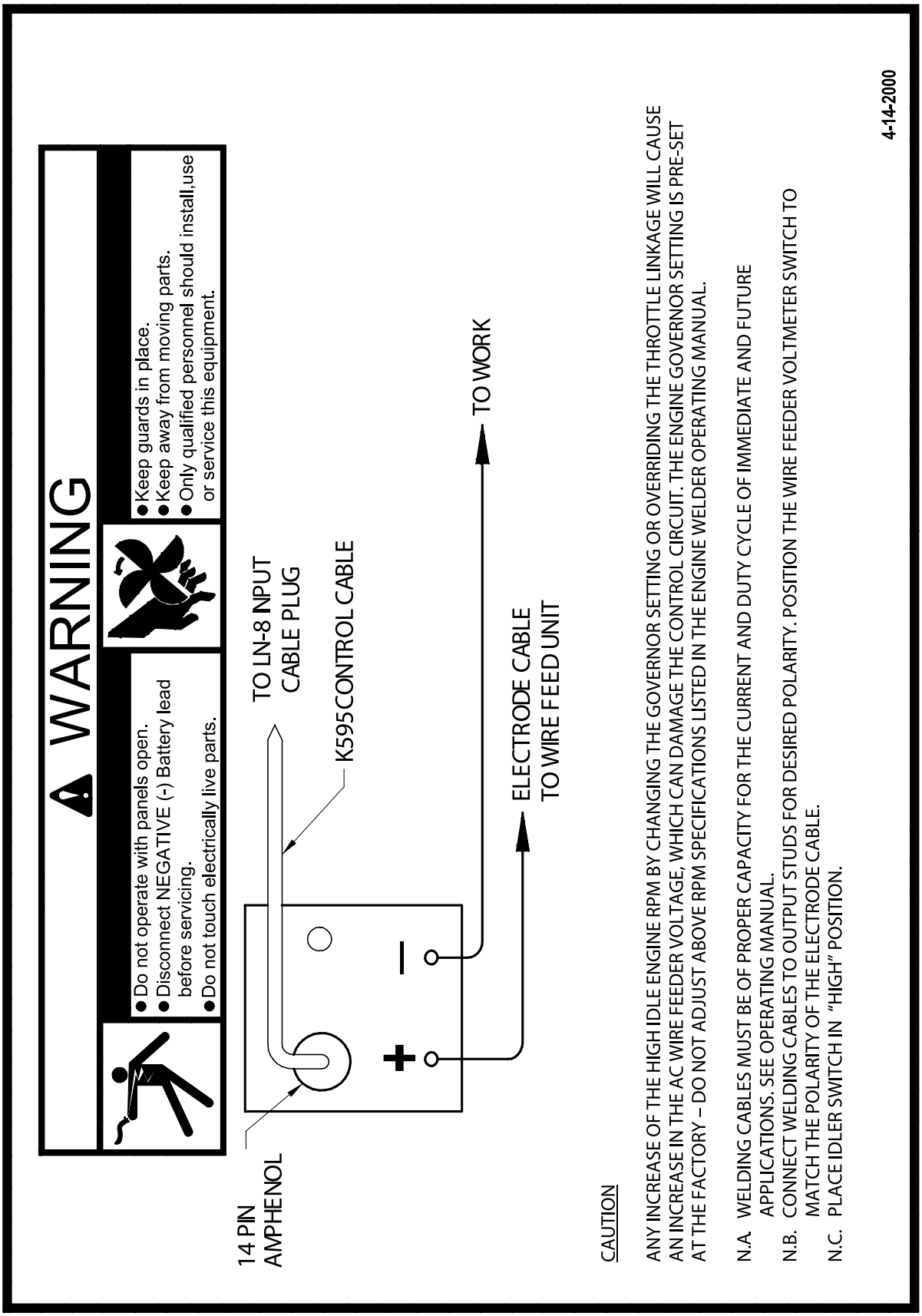

CAUTION

ANY INCREASE OF THE HIGH IDLE ENGINE RPM BY CHANGING THE GOVERNOR SETTING OR OVERRIDING THE THROTTLE LINKAGE WILL CAUSE AN INCREASE IN THE AC WIRE FEEDER VOLTAGE, WHICH CAN DAMAGE THE CONTROL CIRCUIT. THE ENGINE GOVERNOR SETTING IS PRE-SET AT THE FACTORY – DO NOT ADJUST ABOVE RPM SPECIFICATIONS LISTED IN THE ENGINE WELDER OPERATING MANUAL.

N.A. WELDING CABLES MUST BE OF PROPER CAPACITY FOR THE CURRENT AND DUTY CYCLE OF IMMEDIATE AND FUTURE APPLICATIONS. SEE OPERATING MANUAL.

N.B. CONNECT WELDING CABLES TO OUTPUT STUDS FOR DESIRED POLARITY. POSITION THE WIRE FEEDER VOLTMETER SWITCH TO MATCH THE POLARITY OF THE ELECTRODE CABLE.

N.C. PLACE IDLER SWITCH IN "HIGH" POSITION.

4-14-2000

S24787-6

ENGINE WELDERS /LN-25 WITH K624-1 42 VOLT REMOTE OUTPUT CONTROL MODULE CONNECTION DIAGRAM

⚠ WARNING

- Do not operate with panels open.
- Disconnect NEGATIVE (-) Battery lead before servicing.
- Do not touch electrically live parts.

- Keep guards in place.
- Keep away from moving parts.
- Only qualified personnel should install,use or service this equipment.

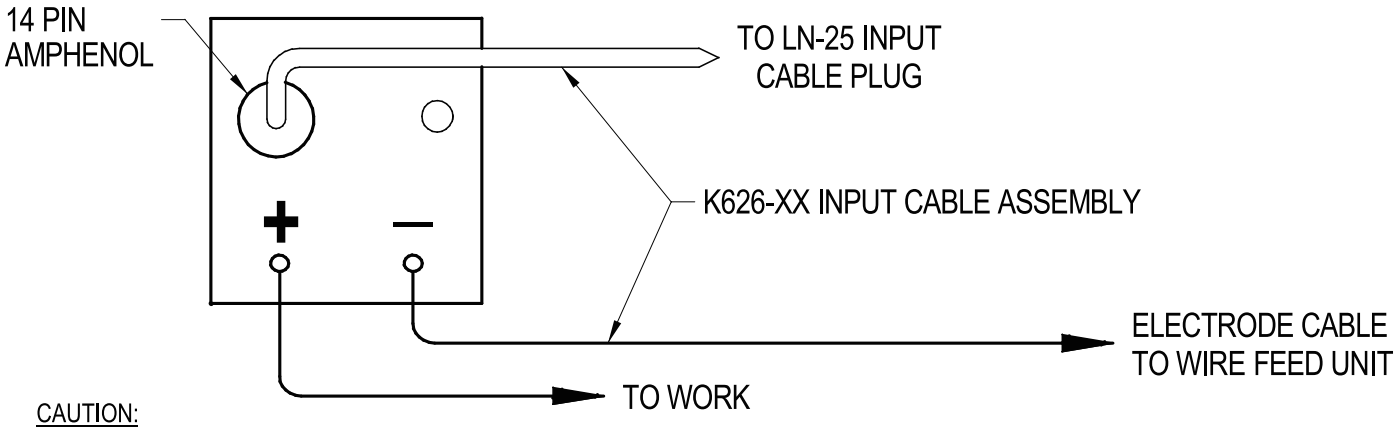

CAUTION:

ANY INCREASE OF THE HIGH IDLE ENGINE RPM BY CHANGING THE GOVERNOR SETTING OR OVERRIDING THE THROTTLE LINKAGE WILL CAUSE AN INCREASE IN THE AC WIRE FEEDER VOLTAGE, WHICH CAN DAMAGE THE CONTROL CIRCUIT. THE ENGINE GOVERNOR SETTING IS PRE-SET AT THE FACTORY – DO NOT ADJUST ABOVE RPM SPECIFICATIONS LISTED IN THE ENGINE WELDER OPERATING MANUAL.

N.A. PLACE THE MODE SWITCH IN THE “CV-WIRE” POSITION. PLACE WELDER TERMINALS SWITCH TO “REMOTELY CONTROLLED” POSITION.

N.B. CONNECT WELDING CABLES TO OUTPUT STUDS FOR DESIRED POLARITY. POSITION THE WIRE FEEDER VOLTMETER SWITCH TO MATCH THE POLARITY OF THE ELECTRODE CABLE.

N.C. WELDING CABLES MUST BE OF PROPER CAPACITY FOR THE CURRENT AND DUTY CYCLE OF IMMEDIATE AND FUTURE APPLICATIONS. SEE OPERATING MANUAL.

N.D. PLACE IDLER SWITCH IN “AUTO” OR “HIGH” IDLE POSITION AS DESIRED.

10-27-2000

S24787-3

ENGINE WELDERS /LN-25 ACROSS THE ARC CONNECTION DIAGRAM WITH OPTIONAL K444-1 REMOTE CONTROL

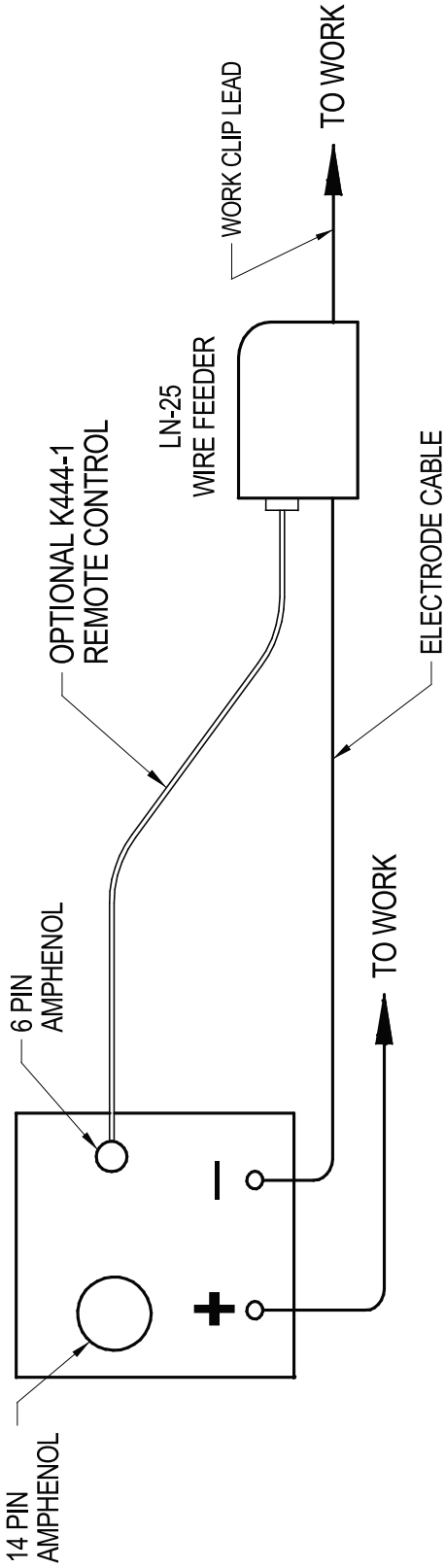

N.A. WELDING CABLES MUST BE OF PROPER CAPACITY FOR THE CURRENT AND DUTY CYCLE OF IMMEDIATE AND FUTURE APPLICATIONS. SEE OPERATING MANUAL.

N.B. CONNECT WELDING CABLES TO OUTPUT STUDS FOR DESIRED POLARITY. POSITION THE WIRE FEEDER VOLTMETER SWITCH TO MATCH THE POLARITY OF THE ELECTRODE CABLE.

N.C. PLACE THE MODE SWITCH IN THE “CV-WIRE” POSITION.

N.D. PLACE THE WELDING TERMINALS SWITCH IN THE “WELD TERMINALS ON” POSITION.

N.E. PLACE IDLER SWITCH IN “AUTO” OR “HIGH” IDLE POSITION AS DESIRED.

10-27-2000

S24787-2

ENGINE WELDERS / K930 TIG MODULE / CONNECTION DIAGRAM

⚠ WARNING

- Do not operate with panels open.
- Disconnect NEGATIVE (-) Battery lead before servicing.
- Do not touch electrically live parts.

- Keep guards in place.
- Keep away from moving parts.
- Only qualified personnel should install,use or service this equipment.

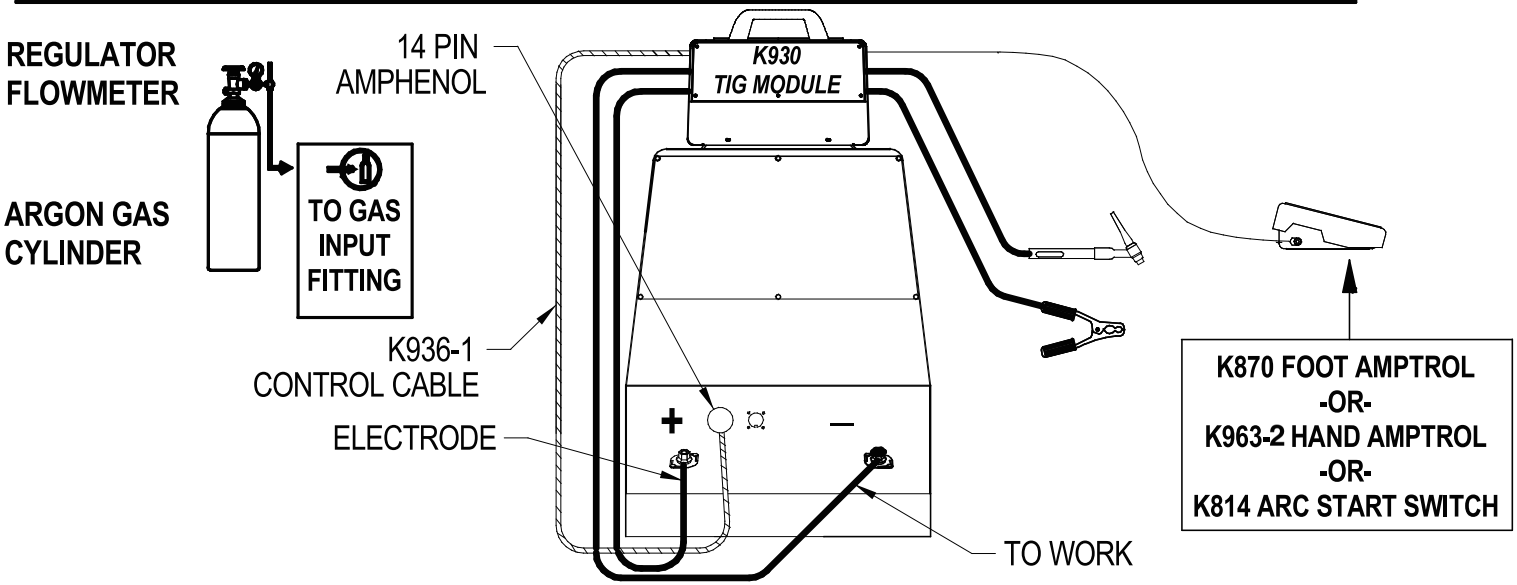

CAUTION:
ANY INCREASE OF THE HIGH IDLE ENGINE RPM BY CHANGING THE GOVERNOR SETTING OR OVERRIDING THE THROTTLE LINKAGE WILL CAUSE AN INCREASE IN THE AC WIRE FEEDER VOLTAGE, WHICH CAN DAMAGE THE CONTROL CIRCUIT. THE ENGINE GOVERNOR SETTING IS PRE-SET AT THE FACTORY – DO NOT ADJUST ABOVE RPM SPECIFICATIONS LISTED IN THE ENGINE WELDER OPERATING MANUAL.

N.A. WELDING CABLES MUST BE OF PROPER CAPACITY FOR THE CURRENT AND DUTY CYCLE OF IMMEDIATE AND FUTURE APPLICATIONS. SEE OPERATING MANUAL.
N.B. CONNECT WELDING CABLES TO OUTPUT STUDS FOR DESIRED POLARITY.
N.C. PLACE THE MODE SWITCH IN THE “TIG” POSITION.
N.D. PLACE OUTPUT CONTROL SWITCH IN “REMOTE CONTROL” POSITION.
N.E. PLACE IDLER SWITCH IN “AUTO” OR “HIGH” IDLE POSITION AS DESIRED.

9/03

S24787-9

ENGINE WELDERS /LN-742 CONNECTION DIAGRAM

⚠ WARNING

ELECTRIC SHOCK can kill

- Do not operate with panels open.
- Disconnect NEGATIVE (-) Battery lead before servicing.
- Do not touch electrically live parts.

MOVING PARTS can injure

- Keep guards in place.
- Keep away from moving parts.
- Only qualified personnel should install,use or service this equipment.

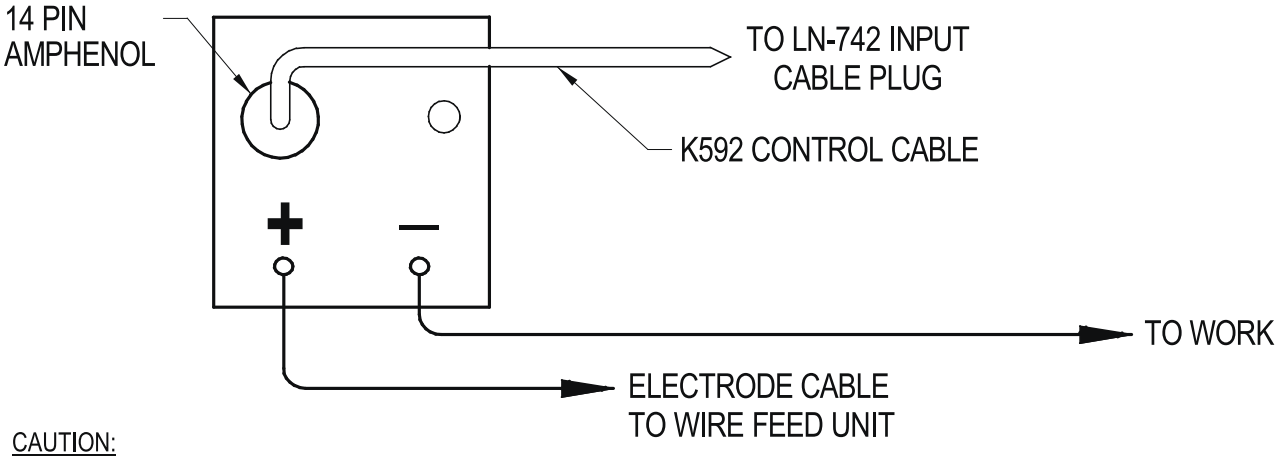

CAUTION:

ANY INCREASE OF THE HIGH IDLE ENGINE RPM BY CHANGING THE GOVERNOR SETTING OR OVERRIDING THE THROTTLE LINKAGE WILL CAUSE AN INCREASE IN THE AC WIRE FEEDER VOLTAGE, WHICH CAN DAMAGE THE CONTROL CIRCUIT. THE ENGINE GOVERNOR SETTING IS PRE-SET AT THE FACTORY – DO NOT ADJUST ABOVE RPM SPECIFICATIONS LISTED IN THE ENGINE WELDER OPERATING MANUAL.

N.A. WELDING CABLES MUST BE OF PROPER CAPACITY FOR THE CURRENT AND DUTY CYCLE OF IMMEDIATE AND FUTURE APPLICATIONS. SEE OPERATING MANUAL.
N.B. CONNECT WELDING CABLES TO OUTPUT STUDS FOR DESIRED POLARITY. POSITION THE WIRE FEEDER VOLTMETER SWITCH TO MATCH THE POLARITY OF THE ELECTRODE CABLE.
N.C. PLACE THE MODE SWITCH IN THE “CV-WIRE” POSITION.
N.D. PLACE WELDER TERMINALS SWITCH TO “REMOTELY CONTROLLED” POSITION.
N.E. PLACE IDLER SWITCH IN “AUTO” OR “HIGH” IDLE POSITION AS DESIRED.

10-27-2000

S24787-5

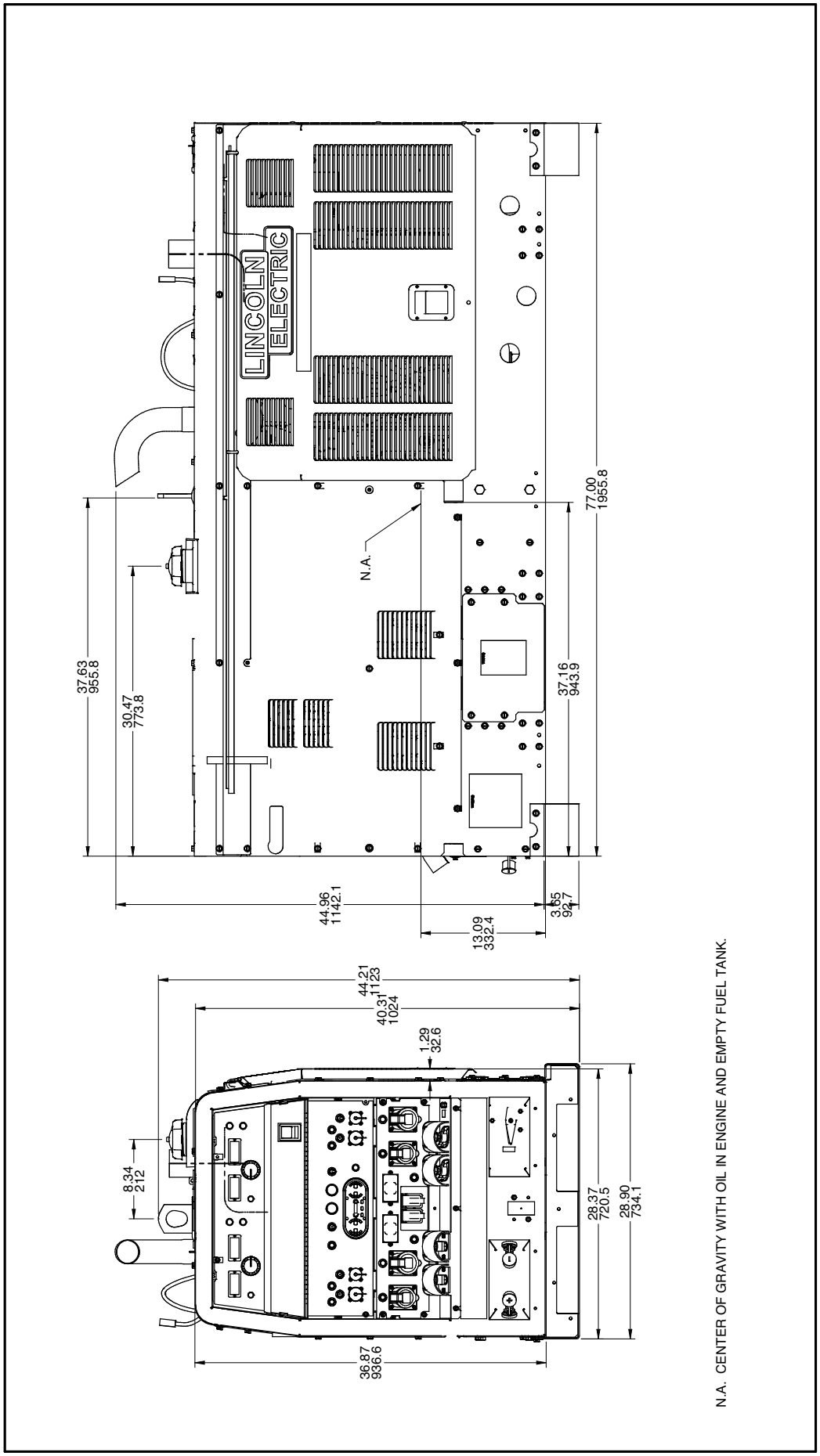
M24664
LINCOLN ELECTRIC
N.A.
37.63
955.8
30.47
773.8
44.96
1142.1
13.09
332.4
3.65
92.7
37.16
943.9
77.00
1955.8
44.21
1123
40.31
1024
1.29
32.6
8.34
212
36.87
936.6
28.37
720.5
28.90
734.1
N.A. CENTER OF GRAVITY WITH OIL IN ENGINE AND EMPTY FUEL TANK.

Service Navigator 2.0

Dual Vantage 800-I (Cummins) - 12581

Index of Sub Assemblies - 12581

KEY	PART NUMBER	DESCRIPTION	QTY
	P-796-A	INDEX OF SUB ASSEMBLIES	AR
	P-796-B.2	MISCELLANEOUS ITEMS	AR
1	P-796-C	CASE FRONT & INSERT ASSEMBLY	AR
2	P-796-D	CONTROL PANEL ASSEMBLY	AR
3	P-796-E	OUTPUT PANEL ASSEMBLY	AR
4	P-796-F	POWER MODULE ASBLY FUEL TANK & RECTIF	AR
5	P-796-G	BASE BATTERY & LIFT FRAME ASSEMBLY	AR
6	P-796-H	ENGINE ASSEMBLY	AR
7	P-796-J	GENERATOR ASSEMBLY	AR
8	P-796-K	RADIATOR & CASE BACK ASBLY	AR
9	P-796-L	COVERS ASSEMBLY	AR

Index of Sub Assemblies - 12581

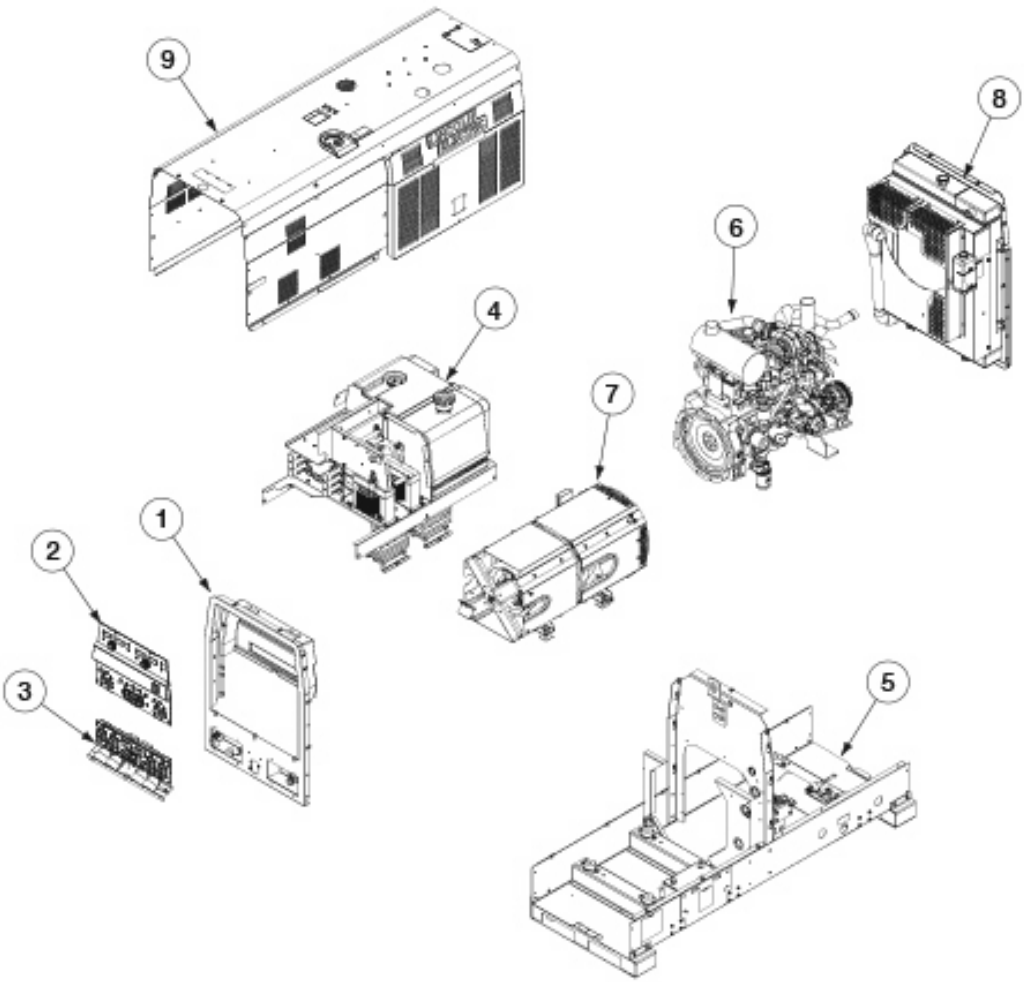

P-796-A.jpg

Miscellaneous Items

KEY	PART NUMBER	DESCRIPTION	QTY
	9SG7432	CONTROL HARNESS	1
	9SM21321-10	ENGINE AIR CLEANER ASSEMBLY	1
	9SS27427	EXHAUST PIPE OUTLET	1
	9SS27501	EXHAUST CLAMP	1
	9SS9225-45	THREAD FORMING SCREW	2
	9SS28899	FASTENER PACKAGE	1
	9SM20610-2	MOUNTING BRACKET	4

Miscellaneous Items

NO IMAGE AVAILABLE

No Image

Case Front & Insert Assembly

KEY	PART NUMBER	DESCRIPTION	QTY
	9SL15032-1	CASE FRONT & INSERT ASBLY	1
1A	9SG6468-1	CASE FRONT	1
1B	9ST11525-7	SPEED NUT	12
1C	9SL15034-3	CASE SIDE INSERT	1
1D	9ST11525-5	SPEED NUT1/4-20	6
	9SS9225-68	THREAD FORMING SCREW (CUTTING)	8
1F	9SS28621	COVER PLATE	1
1G	9SS9225-68	THREAD FORMING SCREW (CUTTING)	2
	9SS9225-64	SELF TAPPING SCREW	4
	9ST9187-16	1/4-20 HLN	1
	9SS9262-98	PLAIN WASHER	1
3	9SG6978-10	CONTROL PANEL ASSEMBLY	1
4	9SG4983-60	OUTPUT PANEL ASSEMBLY	1
5A	9SG6048-1	SHIELD	1
	9ST11525-5	SPEED NUT1/4-20	4
	9SM22797-1	JUMP START TERMINAL ASSEMBLY	1
7A	9SL15930-5	OUTPUT BOX	1
	9SS25760	REMOTE JUMP-START TERMINAL(POSITIVE)	1
7C	9SS25761	REMOTE JUMP-START TERMINAL(NEGATIVE)	1
	9ST9187-13	#10-24HLN-1817/1-NYLON INSERT	4
	9SS9262-4	PLAIN WASHER	2
	9SE106A-16	LOCKWASHER	2
	9SCF000067	3/8-16HN	2
	9SM24661	SWITCH AND BRACKET ASSEMBLY	1
8A	9SL16278	OUTPUT BOX	1
8B	9SM22867	PARALLEL SWITCH	1
8C	9ST14731-38	METRIC HEX HD SCREW-M6 X1.0	3
8D	9SCF000040	5/16-18X.75HHCS	5
8E	9SCF000029	5/16-18HN	5
8F	9SS9262-121	PLAIN WASHER	5
8G	9SE106A-14	LOCKWASHER	5
	9ST9187-13	#10-24HLN-1817/1-NYLON INSERT	4
	9SG8766	DECAL CARRIER	1
	9SG8766	DECAL CARRIER	1

Case Front & Insert Assembly

KEY	PART NUMBER	DESCRIPTION	QTY
	9SG8766	DECAL CARRIER	1

Case Front & Insert Assembly

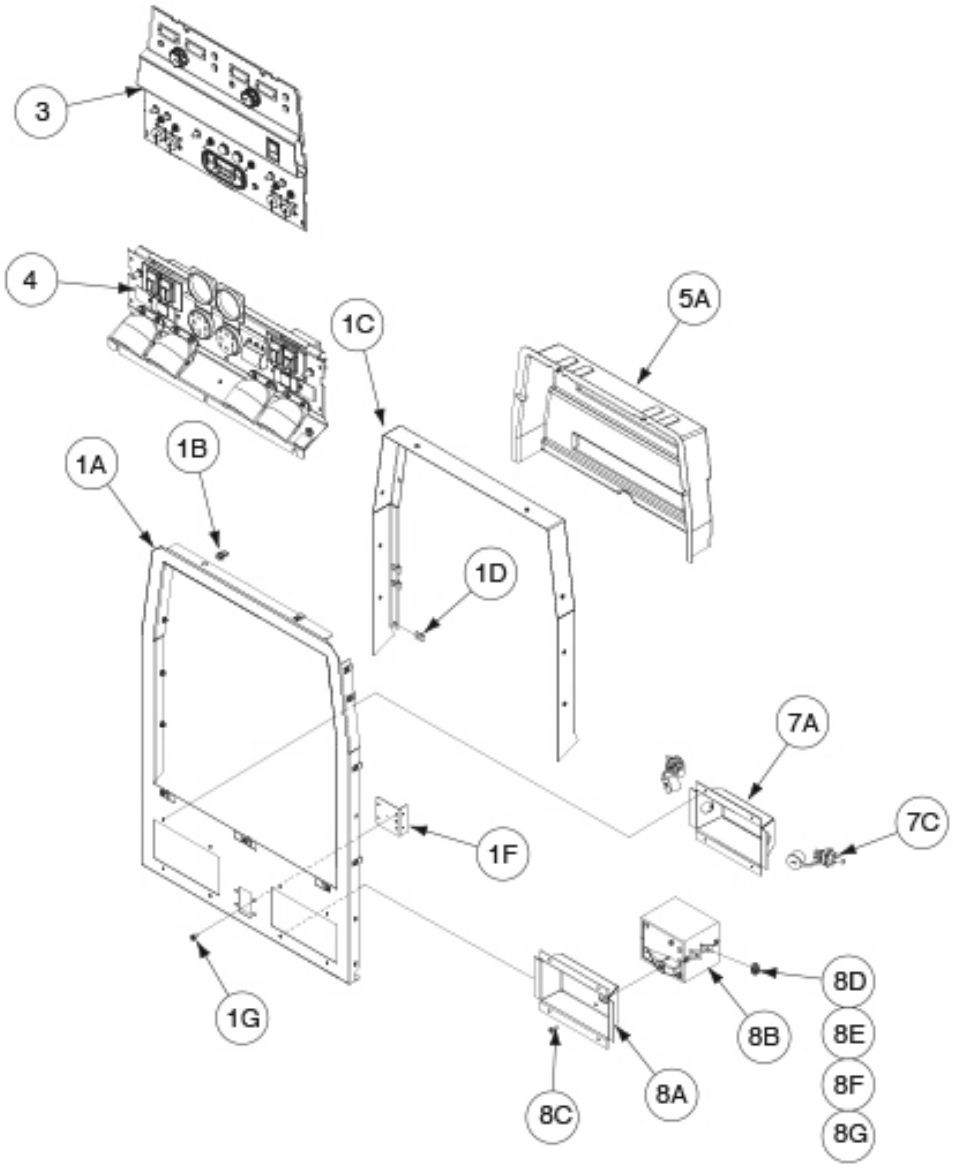

P-796-C.jpg

Control Panel Assembly

KEY	PART NUMBER	DESCRIPTION	QTY
	9SG6978-10	CONTROL PANEL ASSEMBLY	1
1	9SG6970-1	CONTROL PANEL	1
	9SS9262-27	PLAIN WASHER	2
	9SCF000010	#10-24HN	4
	9SE106A-1	LOCKWASHER	2
	9SM19685-53	CONNECTOR & LEAD ASBLY	1
5B	9SM22778-3	KNOB	2
	9SM22778-2	KNOB 1.5"	2
	9ST13483-7	O RING 011	6
	9SM22778-1	KNOB 1.0"	2
	9SM19685-54	CONNECTOR & LEAD ASSEMBLY	1
	9SM19685-48	CONNECTOR AND LEAD ASSEMBLY	1
6A	9SS12021-70	BOX RECEPTACLE SOLID SHELL	1
6B	9SS12021-68	CONNECTOR	1
6C	9SS17062-10	CABLE CONNECTOR CAP	1
6D	9SS17062-11	CABLE CONNECTOR CAP	1
	9SS8025-96	SELF TAPPING SCREW	8
7	9SM22859	DASHBOARD GAUGE	1
	9SM19685-49	CONNECTOR AND LEAD ASSEMBLY	1
	9SS12021-70	BOX RECEPTACLE SOLID SHELL	1
	9SS12021-68	CONNECTOR	1
	9SS17062-10	CABLE CONNECTOR CAP	1
	9SS17062-11	CABLE CONNECTOR CAP	1
	9SS8025-96	SELF TAPPING SCREW	8
11	9ST13534-3	PILOT LIGHT	2
12A	9SS24659	CATCH BRACKET	1
12B	9SS8025-98	SELF TAPPING SCREW	2
13	9SS24691	PILOT LIGHT & TERMINAL	2
14A	9SS28115	MOUNTING STRAP ASSEMBLY	1
14B	9ST9187-13	#10-24HLN-1817/1-NYLON INSERT	2
14C	9SS9262-98	PLAIN WASHER	1
14D	9SE106A-2	LOCKWASHER	1
14E	9SCF000017	1/4-20HN	1
15	9SS13146-4	SWITCH-PUSH BUTTON	1

Control Panel Assembly

KEY	PART NUMBER	DESCRIPTION	QTY
16	9SS13146-1	START BUTTON	1
17A	9ST10800-38	SWITCH-TOGGLE	3
	9SS22061-4	SEALING BOOT	3
18A	9ST10800-39	SWITCH-TOGGLE	5
	9SS22061-4	SEALING BOOT	5
19	9SG8766	NAMEPLATE	1
20A	9SG7637-3	WELD CONTROL PC BD ASBLY	2
	9SS8025-100	SELF TAPPING SCREW	8
20C	9SL11924-4	PCB BRACKET ASSEMBLY	2
	9ST9187-13	#10-24HLN-1817/1-NYLON INSERT	8
	9ST10800-39	SWITCH-TOGGLE	2
	9SG7432	CONTROL HARNESS	1
	9SS15122-14	RELAY	2
	9SCF000042	#8-32HN	4
	9ST9695-3	LOCKWASHER	4
	9ST12287-31	CIRCUIT BREAKER-20A250VAC32VDC	1
	9SS22061-1	CIRCUIT BREAKER BOOT	1
	K2467-1	DIGITAL WELD METER KIT	1
25A	9SL11160	METER HOUSING ASBLY	4
25B	9SS24630	METER HOUSING SEAL	4
25C	9SM19368	METER BEZEL	4
25D	9ST14807-9	FILTER LENS	4
	9SCF000389	#4-40X.375SS-PPNHS-FULL-GR2-3147	8
	9SCF000005	#6-32HN	8
	9SS9262-3	PLAIN WASHER	8
26A	9SG4407-2	OCV INDICATOR PCB ASBLY	2
	9SS8025-100	SELF TAPPING SCREW	4
	9SG8766	NAMEPLATE	1
	9SG8766	NAMEPLATE	1
	9SM19685-36	CONNECTOR AND LEAD ASSEMBLY	1
	9ST12287-20	CIRCUIT BREAKER-10A250VAC	4
	9SS22061-3	SEALING BOOT	4
	9SM21328-34	DOOR DECAL & LATCH ASSEMBLY	1
30A	9SM20043-2	DROP DOWN DOOR ASSEMBLY	1

Control Panel Assembly

KEY	PART NUMBER	DESCRIPTION	QTY
30B	9SG8766	NAMEPLATE	1
30C	9SS25569	DOOR PADDLE LATCH	1
	9SS9225-68	THREAD FORMING SCREW (CUTTING)	4
	9ST13534-11	PILOT LIGHT	1
	9ST13534-6	PILOT LIGHT	2
	9SM19685-51	CONNECTOR AND LEAD ASSEMBLY	1
	9SS9225-68	THREAD FORMING SCREW (CUTTING)	6

Control Panel Assembly

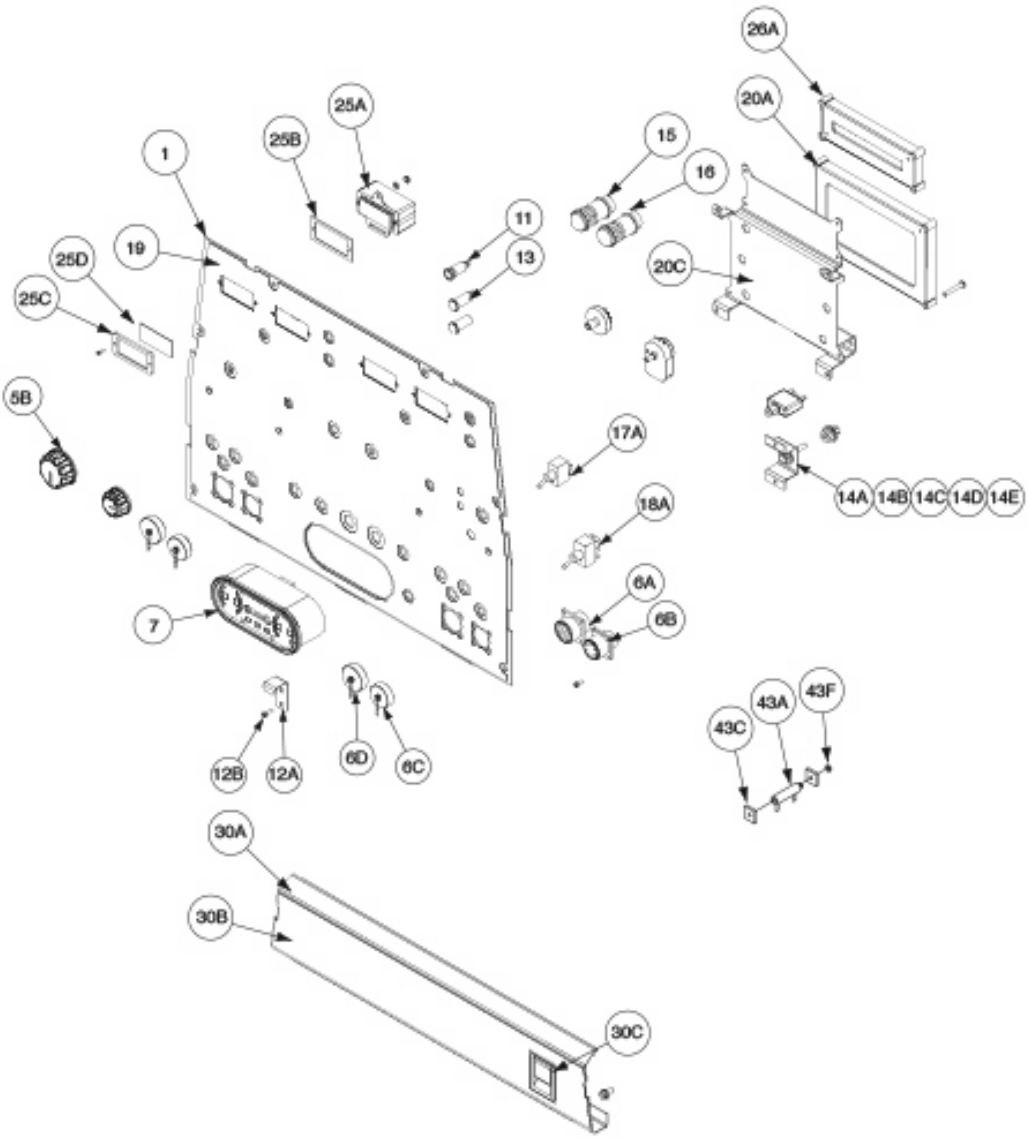

P-796-D.jpg

Output Panel Assembly

KEY	PART NUMBER	DESCRIPTION	QTY
	9SG4983-60	OUTPUT PANEL ASSEMBLY	1
1	9SG6971-3	OUTPUT PANEL (EXPORT)	1
2A	9SS11668-1	RECEPTACLE	1
2B	9SS27290	COVER RECEPTACLE DUPLEX	1
2C	9SL13286	GFCI HOUSING	1
2D	9SS27167	MOUNTING BRACKET	1
2E	9SS24738-3	THERMOPLASTIC SCREW	2
	9SS28464	GFCI COVER	2
3B	9SS26843-1	GFCI REWORK	2
3C	9SL13286	GFCI HOUSING	2
3D	9SS27167	MOUNTING BRACKET	2
3E	9SS24738-3	THERMOPLASTIC SCREW	4
4	9SM20152-3	RECEPTACLE-230V	2
4B	9SS9225-63	THREAD FORMING SCREW (CUTTING)	8
5	9SM20152-2	RECEPTACLE-115V	2
	9SS9225-63	THREAD FORMING SCREW (CUTTING)	8
6A	9ST12287-22	CIRCUIT BREAKER-15A	4
6B	9SS22061-2	SEALING BOOT	2
7A	9ST12287-38	CIRCUIT BREAKER	4
7B	9SS22061-2	SEALING BOOT	4
8A	9SS28839	INSULATION	2
8B	9ST10082-4	SEMS SCREW	4
8C	9SCF000010	#10-24HN	4
8D	9ST14374	INSULATING BUSHING	2
8E	9ST8141-7	CONNECTION STRAP	2
8F	9ST6931-11	STUD	2
8G	9SCF000054	1/2-13HJN	2
8H	9SS9262-1	PLAIN WASHER	4
8J	9SS10773-9	INSULATING WASHER	2
8K	9SS9262-80	PLAIN WASHER	2
8M	9SE106A-15	LOCKWASHER	2
8N	9SCF000054	1/2-13HJN	2
8P	9ST3960	FLANGE NUT	2
9	9SM13900	OUTPUT TERMINAL ASBLY	2

Output Panel Assembly

KEY	PART NUMBER	DESCRIPTION	QTY
9A	9SS8025-91	SELF TAPPING SCREW	4
10	9SG8766	NAMEPLATE	1
11A	9SM20007	OUTPUT STUD COVER	4
11B	9SS25669	OUTPUT STUD COVER PLATE	4
11C	9SS9225-68	THREAD FORMING SCREW (CUTTING)	8
	9SS9262-27	PLAIN WASHER	3
	9SE106A-1	LOCKWASHER	3
	9SCF000010	#10-24HN	6
17A	9SCF000017	1/4-20HN	1
17B	9ST9187-1	1/4-20HJLN	1
18A	9SS28114	MOUNTING STRAP	1
18B	9ST11267-A	INSULATOR	1
18C	9ST11267-B	INSULATOR	1
18D	9SS9262-98	PLAIN WASHER	3
18E	9SCF000035	1/4-20X1.75RHS	1
18F	9SE106A-2	LOCKWASHER	2
18G	9SCF000017	1/4-20HN	1
19	9ST9187-13	#10-24HLN-1817/1-NYLON INSERT	2
20	9SS28840	SUPPRESSOR ASBLY	4
	9SS9262-27	PLAIN WASHER	3
	9SCF000010	#10-24HN	6
	9SE106A-1	LOCKWASHER	3
	9SS9225-68	THREAD FORMING SCREW (CUTTING)	7
	9SS24097-6	SHUNT ASBLY	1
	9SCF000021	1/2-13X1.00HHCS	1
	9SS9262-1	PLAIN WASHER	1
	9SE106A-15	LOCKWASHER	1
	9SCF000027	1/2-13HN	1
	9SS24097-7	SHUNT & LEAD ASSEMBLY	1

Output Panel Assembly

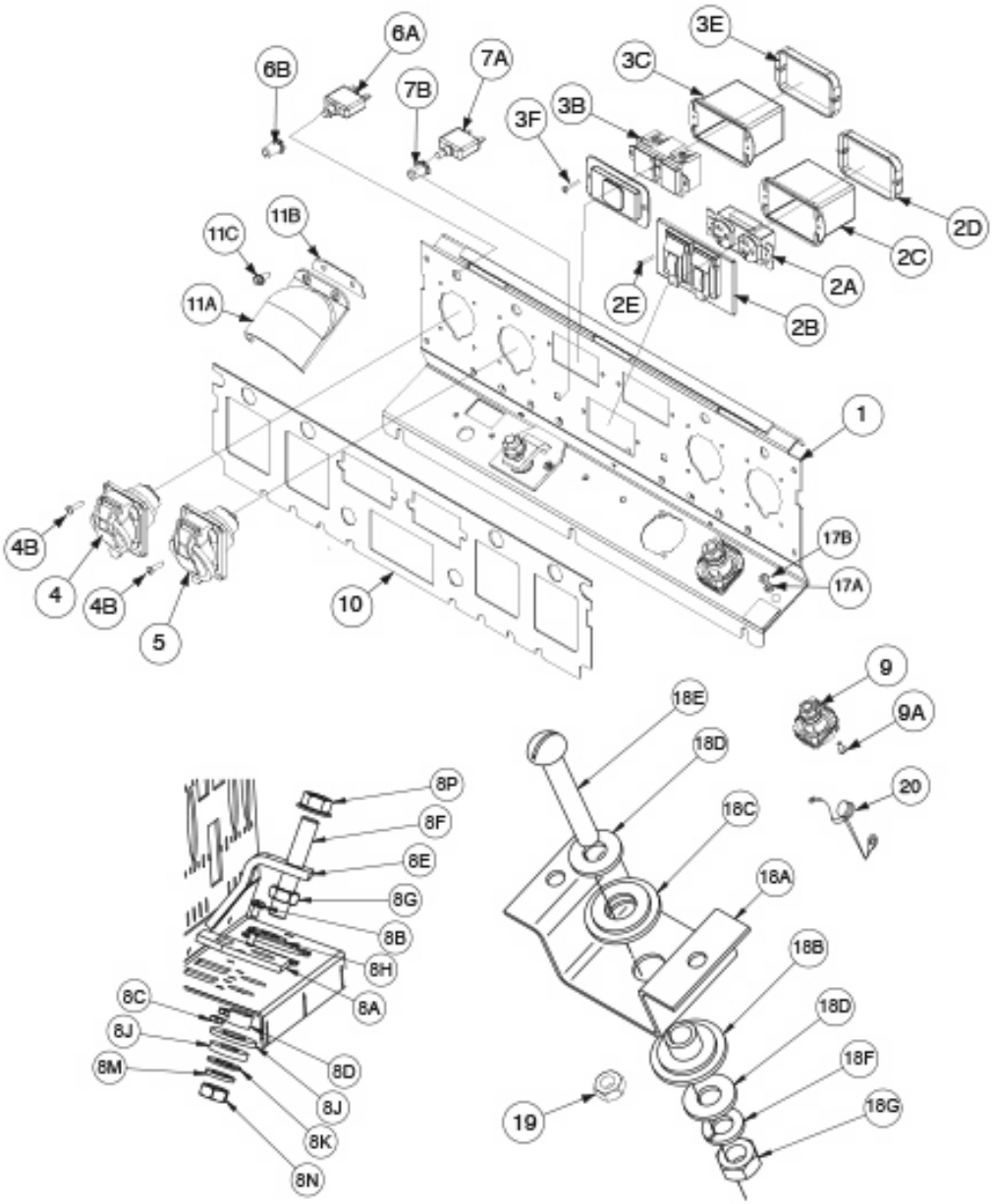

P-796-E.jpg

Power Module Asbly, Fuel Tank, & Rectifier Mounting

KEY	PART NUMBER	DESCRIPTION	QTY
	9SG7436	POWER MODULE ASSEMBLY	1
1A	9SG6566-1	FUEL TANK TRAY	1
1B	9ST11525-7	SPEED NUT	4
2A	9SG7020	FUEL TANK BAFFLE	1
	9SS9225-64	SELF TAPPING SCREW	3
	9SL16070-1	CAPACITOR ASSEMBLY	1
3A	9SM22747	CAPACITOR BRACKET	1
3B	9SS13490-171A	FILTER CAPACITOR	2
	9SS11604-65	SET SCREW	4
3D	9SL9170	CAPACITOR MOUNT	2
	9SS9225-30	THREAD FORMING SCREW (CUTTING)	2
3F	9SM20007	OUTPUT STUD COVER	2
3G	9SS25669	OUTPUT STUD COVER PLATE	2
3H	9SS9225-68	THREAD FORMING SCREW (CUTTING)	4
	9SG7255-1	HARNESS	1
	9SS9262-98	PLAIN WASHER	4
	9SE106A-2	LOCKWASHER	4
	9SCF000017	1/4-20HN	4
13A	9SL9036-5	CHOKE COIL & LAM ASBLY	2
	9SS9225-64	SELF TAPPING SCREW	7
	9SL16010	CHOPPER & BRACKET ASSEMBLY	2
14A	9SL16085	CHOPPER PC BD MOUNT	1
14B	9SS26006-2	CHOPPER BRACKET	2
14C	9SL12683-1	CHOPPER HEAT SINK	1
	9SE106A-2	LOCKWASHER	4
	9SS25930-6	TORX BUTTON HEAD SCREW 1/4-20X.62	4
14F	9ST13359-15	THERMOSTAT	1
14G	9SM15045-109	ACOUSTICAL FOAM	1
14H	9SS9225-64	SELF TAPPING SCREW	4
	9SCF000014	1/4-20X.75HHCS	12
	9SE106A-2	LOCKWASHER	12
	9SS9262-98	PLAIN WASHER	12
	9SL16106-1	FAN & BRACKET ASSEMBLY	1
15A	9SG7226-1	FAN MOUNTING BRACKET ASSBLY.	1

Power Module Asbly, Fuel Tank, & Rectifier Mounting

KEY	PART NUMBER	DESCRIPTION	QTY
15B	9SM22071	FAN	1
	9SS9225-92	THREAD FORMING SCREWCUTTING(1/4-20X.50)	4
15D	9SS10404-138	RESISTOR-WW100W505%	2
15E	9SS22168	HEAT SINK HOLDER	4
	9SCF000191	#10-24X7.50RHS	2
	9SS9262-27	PLAIN WASHER	4
	9SE106A-1	LOCKWASHER	2
15J	9SCF000010	#10-24HN	2
	9SE106A-2	LOCKWASHER	4
	9SCF000017	1/4-20HN	4
15M	9SM15045-108	ACOUSTICAL FOAM	2
	9SS9225-64	SELF TAPPING SCREW	2
	9SE106A-2	LOCKWASHER	1
	9SCF000017	1/4-20HN	1
16	9ST12380-1	BUSHING	2
	9SL16109	BYPASS PC. BOARD BRACKET ASSEMBLY	1
18A	9SG7227	CHOKE BAFFLE	1
18B	9SL15862-1	MEGA BYPASS/VRD STABILIZER PC BD ASBLY	1
18C	9SS14020-3	PLASTIC EXPANSION NUT	1
18D	9SS8025-97	SELF TAPPING SCREW	3
18E	9ST12380-1	BUSHING	1
18F	9ST10397-24	PLUG BUTTON	2
18G	9ST11525-7	SPEED NUT	2
	9SS9225-68	THREAD FORMING SCREW (CUTTING)	2
19	9SM15045-109	ACOUSTICAL FOAM	1
20A	9SM22857	MODULE ADAPTER PLATE	1
	9SS9225-68	THREAD FORMING SCREW (CUTTING)	2
21	9SM15045-62	ACOUSTICAL FOAM	2
22	9SS22415-1	TRIM SEAL	1
29A	9SM24641	PC BOARD & BRACKET ASSEMBLY	1
	9SE106A-2	LOCKWASHER	3
	9SCF000017	1/4-20HN	3
	9SS9225-64	SELF TAPPING SCREW	5
31	9SG7234-1	IDLER PCB MOUNT BRACKET ASSBLY	1

Power Module Asbly, Fuel Tank, & Rectifier Mounting

KEY	PART NUMBER	DESCRIPTION	QTY
	9SS9225-68	THREAD FORMING SCREW (CUTTING)	4
	9SE106A-2	LOCKWASHER	3
	9SCF000017	1/4-20HN	3
35	9SS10404-132	RESISTORWW25W105%	1
35A	9SCF000009	#10-24X3.00RHS	1
35B	9ST4479-A	INSULATING WASHER	2
35C	9SS9262-27	PLAIN WASHER	1
35D	9SE106A-1	LOCKWASHER	1
35E	9SCF000010	#10-24HN	1
36	9ST13637-5	DIODE-BRIDGE35A800VF-W1-PH	2
36A	9SS10773-7	INSULATING WASHER	2
36B	9SS9262-3	PLAIN WASHER	2
36C	9SE106A-1	LOCKWASHER	2
36D	9SCF000010	#10-24HN	2
37	9SS14293-20	RELAY HEAVY DUTY 12VDC SPDT	1
	9SS9225-61	THREAD FORMING SCREW (ROLLING)	1
38	9ST12380-4	BUSHING	1
39	9ST11525-7	SPEED NUT	1
40	9SG6982	FUEL TANK ASBLY	1
40A	9SG6981	FUEL TANK	1
40B	9SS20541	FUEL CAP	1
40C	9SL12505-1	FUEL SENDER	1
	9SS19564-1	FUEL FITTING (PUSH-IN)	1
	9SS19563	RUBBER PLUG	2
	9SS19564-5	FUEL FITTINGPUSH-IN	1
	9SS25771	REDUCUNG BARB TAIL	1
	9ST13777-6	HOSE CLAMP	2
	9ST10642-218	FLEX HOSE	1
	9ST10642-301	FLEX TUBE	1
	9ST13777-1	HOSE CLAMP	2
	9SS24068	FUEL SHUT-OFF	1
	9SL16372	RECTIFIER MOUNTING ASSEMBLY	1
41A	9SL16058	UPPER RECTIFIER MTG BRACKET	1
41B	9SM22796	LOWER RECTIFIER MTG BRACKET	2

Power Module Asbly, Fuel Tank, & Rectifier Mounting

KEY	PART NUMBER	DESCRIPTION	QTY
41C	9SL11132-2	THREE PHASE BRIDGE RECTIFIER	2
41D	9SE106A-3	LOCKWASHER	8
	9ST14815-19	METRIC HEX NUT	4
	9SS9262-121	PLAIN WASHER	4
	9ST11525-7	SPEED NUT	4
	9SCF000028	5/16-18X1.25HHCS	4
	9SS9262-121	PLAIN WASHER	8
	9SE106A-14	LOCKWASHER	4
	9SCF000029	5/16-18HN	4
	9SS22415-15	TRIM SEAL	1

Power Module Asbly, Fuel Tank, & Rectifier Mounting

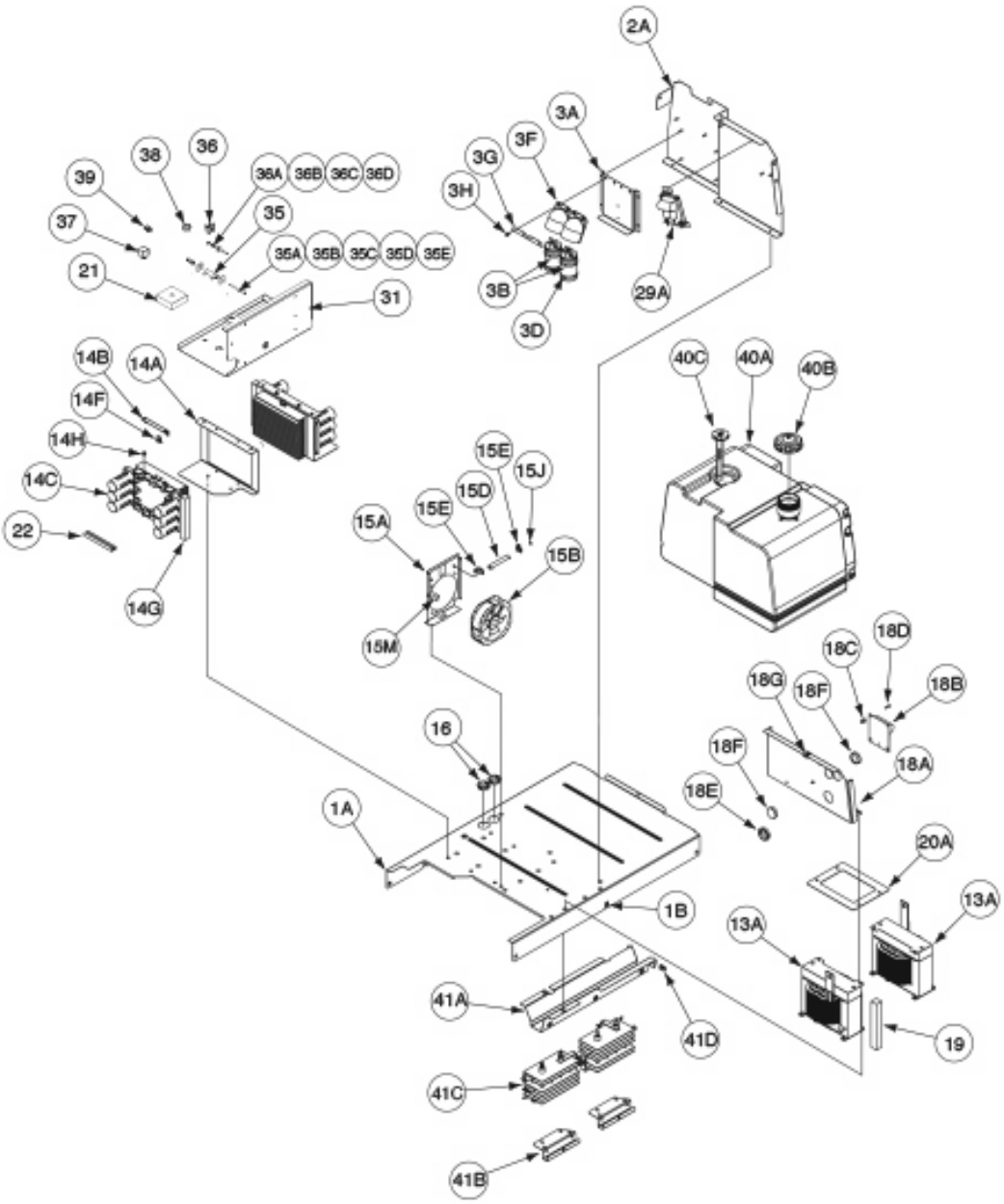

P-796-F.jpg

Base, Battery, & Lift Frame Assembly

KEY	PART NUMBER	DESCRIPTION	QTY
	9SG6586-3	BASE ASSEMBLY	1
1	9SG6955	BASE	1
2A	9SL12454-6	SUPPORT	1
2B	9SS24485	RUBBER MOUNT	6
2C	9SS9225-64	SELF TAPPING SCREW	36
	9SS9262-98	PLAIN WASHER	6
	9ST9187-16	1/4-20 HLN	3
2F	9SL12454-7	STATOR SUPPORT	2
5A	9SM22708	STEEL SKID ASBLY	2
5B	9SS9225-64	SELF TAPPING SCREW	8
6	9ST11525-7	SPEED NUT	13
9B	9SS9225-64	SELF TAPPING SCREW	4
	9SG3098-6	LIFT FRAME ASSEMBLY	1
10A	9SG6530-1	LIFT FRAME	1
10B	9SS10227-63	LIFT BALE	1
10C	9ST8833-24	HEX HD CAP SCREW	4
	9SE106A-15	LOCKWASHER	4
	9SCF000027	1/2-13HN	4
10F	9ST12380-1	BUSHING	1
10G	9ST13086-235	DECAL-WARNING	1
10H	9ST11525-7	SPEED NUT	9
10J	9ST12380-4	BUSHING	1
10K	9ST12380-12	BUSHING	1
10L	9SS29239	SERVICE DECAL	1
	9SE106A-15	LOCKWASHER	4
	9SCF000027	1/2-13HN	4
10P	9ST8833-24	HEX HD CAP SCREW	4
11A	9SL15132-3	LEFT BAFFLE	1
	9SS9225-64	SELF TAPPING SCREW	3
	9ST11525-7	SPEED NUT	1
11D	9ST12380-12	BUSHING	1
11E	9SM15045-105	ACOUSTICAL FOAM	1
12A	9SL15132-4	RIGHT BAFFLE	1
	9SS9225-64	SELF TAPPING SCREW	6

Base, Battery, & Lift Frame Assembly

KEY	PART NUMBER	DESCRIPTION	QTY
12C	9ST12380-12	BUSHING	2
	9SM15046-105	ACOUSTICAL FOAM	1
	9ST11525-7	SPEED NUT	2
	9SL8904-8	BATTERY & HOLD DOWN ASSEMBLY	1
13A	9SM17798-5	BATTERY PANEL	1
13B	9SS22018-2	BATTERY BRACKET	1
13C	9ST11827-31	CARRIAGE BOLT	2
	9ST9187-6	LOCKNUT	2
13E	9SM9399-15	BATTERY	1
	9ST14654	CAP-PLASTIC	1
	9SS9225-64	SELF TAPPING SCREW	4
	9SS8070-50	BATTERY CABLE (POSITIVE)	1
	9SS20191-1	BATTERY TERMINAL COVER	1
	9SS8070-56	BATTERY CABLE	1
	9SS20191-3	BATTERY TERMINAL COVER	1
21	9SS17851	DECAL-CAUTION	1
22	9SS20601-5	DECAL-WARNING	1
27	9SS18543-4	INPUT CABLE GROMMET	1
28A	9SS14293-20	RELAY HEAVY DUTY 12VDC SPDT	2
	9SS9225-61	THREAD FORMING SCREW (ROLLING)	2
37A	9SS14293-20	RELAY HEAVY DUTY 12VDC SPDT	1
	9SCF000119	#8-32X1.50RHS	1
	9SS9262-3	PLAIN WASHER	1
	9SE106A-1	LOCKWASHER	1

Base, Battery, & Lift Frame Assembly

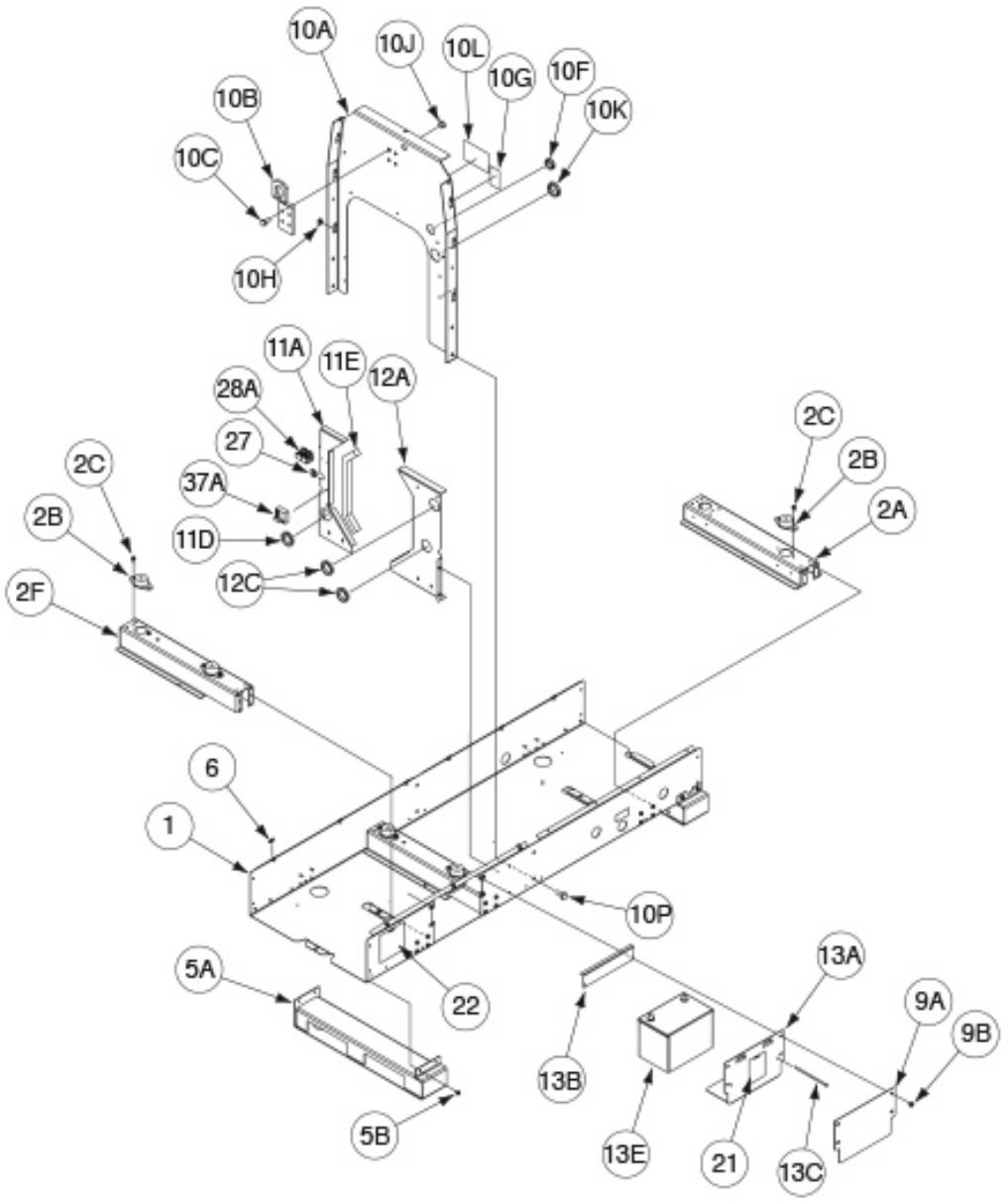

P-796-G.jpg

Engine Assembly

KEY	PART NUMBER	DESCRIPTION	QTY
	9SG3990-9	ENGINE ASSEMBLY	1
1	9SM22560	ENGINE	1
2	9SG4480-3	RIGHT ENGINE FOOT	1
	9ST14731-5	METRIC HEX HD SCREW-M10 X 1.5	3
	9SS17400-1	LOCKWASHER-METRIC	3
3	9SG4480-4	LEFT ENGINE FOOT	1
	9ST14731-5	METRIC HEX HD SCREW-M10 X 1.5	1
	9SS17400-1	LOCKWASHER-METRIC	1
5	9SL16072	FAN	1
6	9SL15971	MUFFLER MTG BRACKET	1
	9ST14731-5	METRIC HEX HD SCREW-M10 X 1.5	2
	9SS17400-1	LOCKWASHER-METRIC	2
7	9SM20521-2	MUFFLER BLANKET	1
8	9SG6983	MUFFLER	1
	9SCF000019	3/8-16X1.00HHCS 10	2
	9SS9262-120	PLAIN WASHER	4
	9SE106A-16	LOCKWASHER	2
	9SCF000067	3/8-16HN	2
9	9SS17026-1	PRESSURE SENDER	1
11	9SS25162	SWITCH WATER	1
14	9SS15017-16	GROUND STRAP	1
	9ST14731-5	METRIC HEX HD SCREW-M10 X 1.5	1
	9SS17400-1	LOCKWASHER-METRIC	1
16	9SG6984-4	COMPRESSOR ASBLY	1
	9SG6911-15	MAIN BRACKET ASBLY	1
17	9SL16004	AIR INTAKE HOSE	1
	9SS10888-20	HOSE CLAMP	2
18	9SG7078	COOLANT HOSE-ENGINE TO RADIATOR	1
	9SS10888-44	HOSE CLAMP	2
19	9SL16202	COOLANT HOSE	1
	9SS10888-29	HOSE CLAMP	2
	9SG6911-5	BELT 5060475 47.5	1
23	9SM24133	TIMING INDICATOR	1
	9ST14731-38	METRIC HEX HD SCREW-M6 X1.0	2

Engine Assembly

KEY	PART NUMBER	DESCRIPTION	QTY
	9SS17400-3	METRIC LOCKWASHER	2
24	9SM24146	MAGNETIC PICKUP	1
25	9SM25074	CRANKSHAFT PULLEY ASSEMBLY	1
26	9SM25097	BELT BX-47	1
27	9SS24662	OIL DRAIN VALVE	1
	9SS25362-1	HOSE NIPPLE	1
	9ST10642-264	FLEX TUBE	1
	9SS10888-27	HOSE CLAMP	1
	9ST10642-333	FLEX TUBE	1
	9ST10642-334	FLEX TUBE	3
	9SS29250	BARB	1
	9SS10888-35	HOSE CLAMP	8
	9SM19794-3	FUEL STRAINER	1
	9ST10642-218	FLEX HOSE	1

Engine Assembly

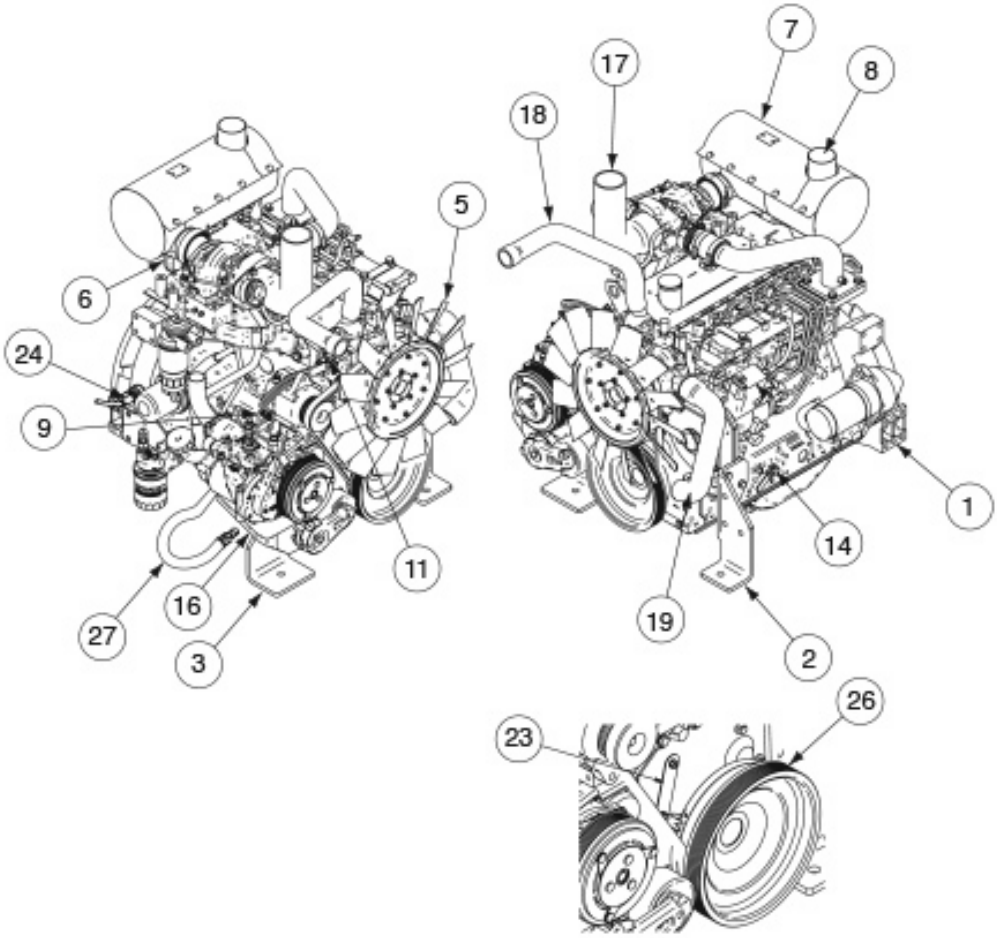

P-796-H.jpg

Generator Assembly

KEY	PART NUMBER	DESCRIPTION	QTY
	9SL10742-26	GENERATOR ASSEMBLY	1
2	9SL10501-21	ROTOR & SHAFT ASBLY	1
2A	9SM19796	COUPLING DISC	1
2B	9SS8042	COUPLING DISC BACKING PLATE	2
	9SS14233	COUPLING CLAMP RING-INSIDE	1
	9ST8833-2	HEX HD CAP SCREW	1
	9SE106A-8	LOCKWASHER	8
3	9SM9300-181	BEARING	1
4A	9SM22633	BLOWER ASBLY	4
	9ST14731-5	METRIC HEX HD SCREW-M10 X 1.5	8
	9SS17400-1	LOCKWASHER-METRIC	8
5A	9SG3088-36	STATOR TIE BAR ASSEMBLY	1
5B	9SS9776-70	RETAINING RING	2
6A	9SL15942	STATOR QUARTER BAFFLE	2
6B	9SL15942-1	STATOR QUARTER BAFFLE	2
	9SS9225-66	SELF TAPPING SCREW	8
	9SS9225-64	SELF TAPPING SCREW	4
	9ST13483-50	O-RING	1
8A	9ST14731-5	METRIC HEX HD SCREW-M10 X 1.5	8
	9SS17400-1	LOCKWASHER-METRIC	8
9A	9SM21315-3	BRUSH HOLDER & BRACKET ASBLY	1
	9SS9225-8	THREAD FORMING SCREW (ROLLING)	2
10A	9SL11614-6	STATOR COWLING	1
	9SS9225-68	THREAD FORMING SCREW (CUTTING)	6
10C	9SS22415-11	TRIM SEAL	1
11A	9SL11614-7	STATOR COWLING	1
	9SS9225-64	SELF TAPPING SCREW	12
12A	9SL10501-18	ROTOR & SHAFT ASBLY	1
12B	9SS20110-7	CENTERING WASHER	1
12C	9SE106A-4	LOCKWASHER	1
12D	9ST8833-85	HEX HEAD CAP SCREW	1
13A	9SM9300-85	BEARING	1
	9ST13483-49	O-RING	1
15A	9SG3088-35	STATOR TIE BAR ASSEMBLY	1

Generator Assembly

KEY	PART NUMBER	DESCRIPTION	QTY
	9ST14731-5	METRIC HEX HD SCREW-M10 X 1.5	8
	9SS17400-1	LOCKWASHER-METRIC	8
16A	9SM21315-7	BRUSH HOLDER & BRACKET ASBLY	1
	9SS9225-8	THREAD FORMING SCREW (ROLLING)	2
17A	9SL11614-8	STATOR COWLING	1
	9SS9225-68	THREAD FORMING SCREW (CUTTING)	6
17C	9SS22415-12	TRIM SEAL	1
18A	9SL11614-9	STATOR COWLING	1
	9SS9225-68	THREAD FORMING SCREW (CUTTING)	2
22A	9ST9054	WASHER	4
22B	9SCF000123	1/2-13X2.75HHCS	4
22C	9SS9262-5	PLAIN WASHER	4
22D	9ST9187-4	LOCKNUT	4
23A	9SS28658	BRUSH COVER	2
23B	9SS9225-68	THREAD FORMING SCREW (CUTTING)	4
	9SS9225-53	THREAD FORMING SCREW	1
	9SS9262-4	PLAIN WASHER	1
	9SE106A-16	LOCKWASHER	1
27A	9SM22905	ENGINE SPEED CONTROLLER	1
	9SS9225-17	THREAD FORMING SCREW (ROLLING)	2
28	9SS22415-13	TRIM SEAL	1
29	9SM22560-2	BREATHER & HOSE ASSEMBLY	1
29B	9SS10888-44	HOSE CLAMP	1
29C	9SM22836	BREATHER MTG BRACKET	1
29D	9ST14731-5	METRIC HEX HD SCREW-M10 X 1.5	2
29E	9SS17400-1	LOCKWASHER-METRIC	2
29F	9SS28272-4	LOOP CLAMP 1.25	1
29G	9SS9225-76	SELF TAPPING SCREW	1
29H	9SE106A-1	LOCKWASHER	1
	9SCF000010	#10-24HN	1
30	9SM22848	ELECTRIC LIFT PUMP	1
30A	9SCF000015	1/4-20X1.00HHCS	2
30B	9SS9262-98	PLAIN WASHER	2
30C	9SE106A-2	LOCKWASHER	2

Generator Assembly

KEY	PART NUMBER	DESCRIPTION	QTY
30D	9SCF000017	1/4-20HN	2
31	9SS29946	SHELF SUPPORT BRACKET	1
31A	9SS9225-64	SELF TAPPING SCREW	6
	9SM24813	SHAFT HUB ASBLY	1
	9SM24812	SHAFT COUPLING	1
	9ST9447-123	SOCKET HEAD CAP SCREW	1
	9SE106A-6	LOCKWASHER	1

Generator Assembly

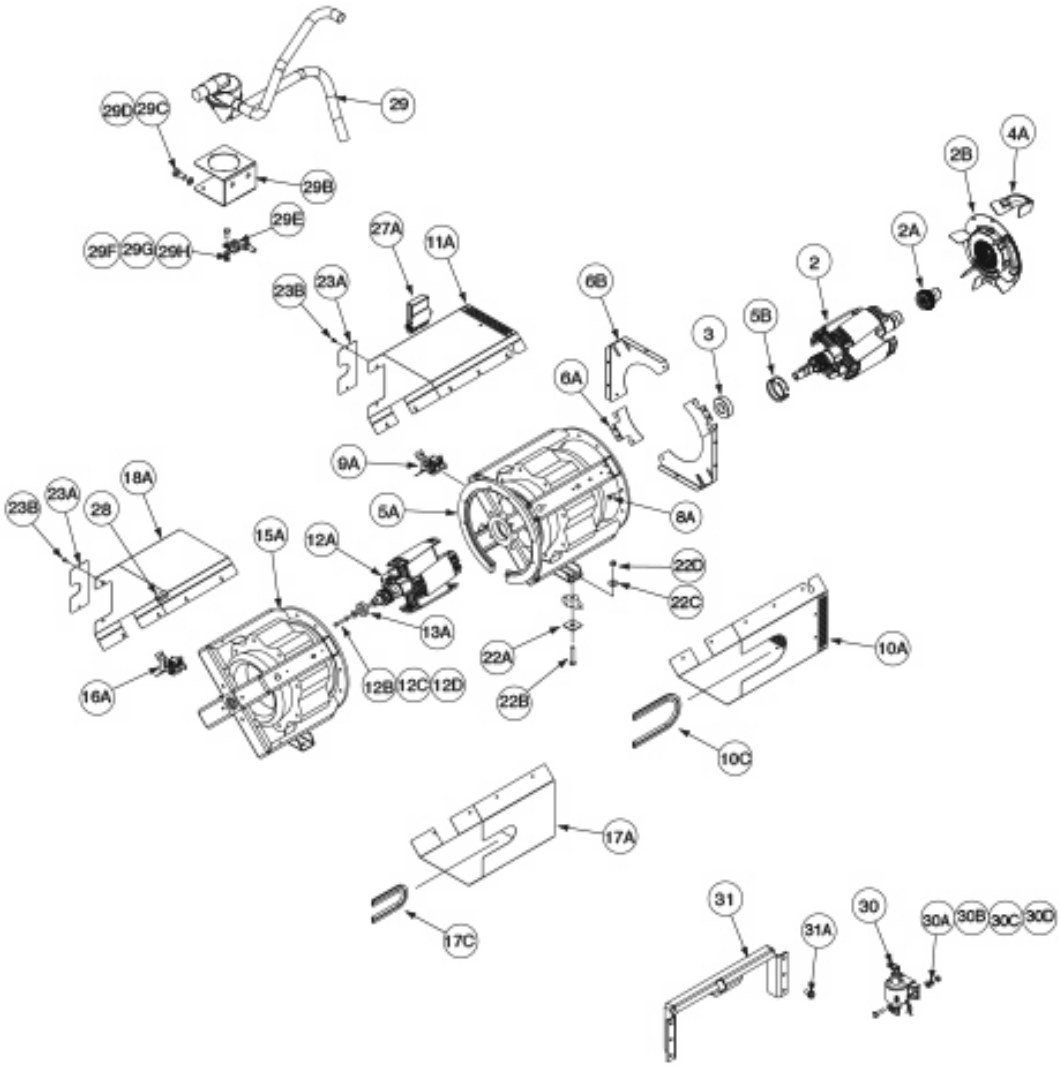

P-796-J.jpg

Radiator & Case Back Asbly

KEY	PART NUMBER	DESCRIPTION	QTY
	9SL16279-1	RADIATOR & CASE BACK ASBLY	1
1	9SG7001-1	CASE BACK	1
2	9SG3115-19	RADIATOR	1
3A	9ST11827-26	CARRIAGE BOLT	6
	9SS9262-121	PLAIN WASHER	6
	9ST9187-15	5/16-18HLN-SS	6
5	9ST11525-7	SPEED NUT	11
6A	9SL15965-1	FAN SHROUD	1
	9SS9225-64	SELF TAPPING SCREW	4
	9SE106A-14	LOCKWASHER	4
	9SS9262-121	PLAIN WASHER	4
8A	9SG7433	HOSE	1
	9SS10888-44	HOSE CLAMP	2
	9SS29260	COOLANT SERVICE DECAL	1
	9SS22415-11	TRIM SEAL	2
12A	9ST10642-218	FLEX HOSE	2
12B	9ST10642-333	FLEX TUBE	2
12C	9SS10888-35	HOSE CLAMP	6
13	9SS24068	FUEL SHUT-OFF	2
14	9ST13086-235	DECAL-WARNING	1
	9SS9225-64	SELF TAPPING SCREW	4
16A	9SG7419	FAN GUARD (RIGHT)	1
	9SS9225-68	THREAD FORMING SCREW (CUTTING)	5
17A	9SG7065	FAN GUARD	1
	9SS9225-68	THREAD FORMING SCREW (CUTTING)	5
18	9SG8274	RADIATOR SUPPORT BRACKET	1
20	9SL17074	REAR NAMEPLATE	1

Radiator & Case Back Asbly

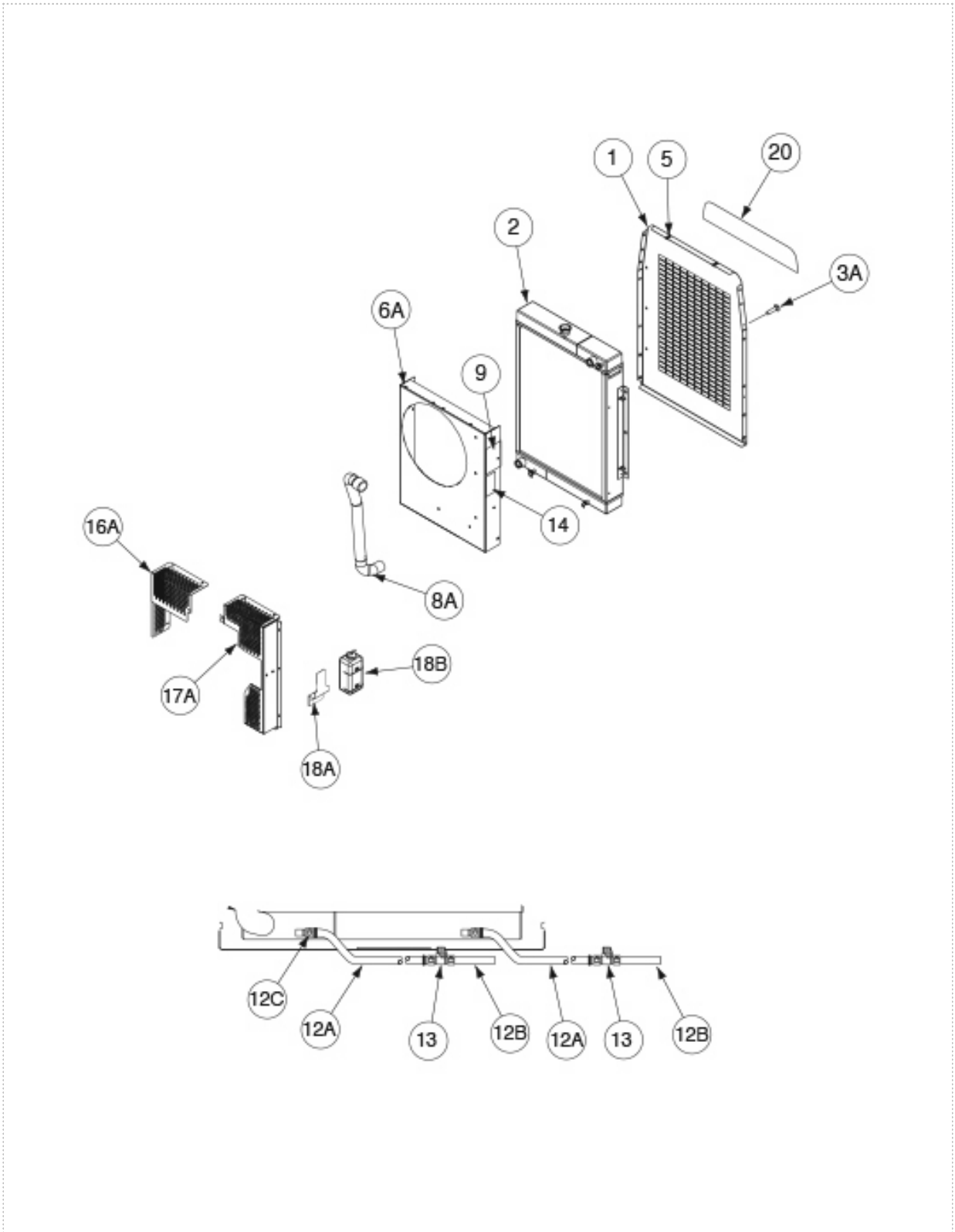

P-796-K.jpg

Covers Assembly

KEY	PART NUMBER	DESCRIPTION	QTY
	9SL13116-10	ROOF ASSEMBLY	1
1A	9SG6466-1	ROOF	1
	9ST14882-1	DOOR BUMPER	2
1C	9SM20278	RADIATOR CAP COVER ASSEMBLY	1
	9ST12584-6	RIVET	2
1E	9ST13086-237	FUEL WARNING DECAL	1
1F	9SS25896-3	WARNING DECAL	1
1G	9SL12084	FUEL TROUGH	1
1H	9SL16212	AIR CLEANER BRACKET	1
	9SS24739-40	STAINLESS STEEL SCREW	2
	9ST13597-6	BUTTON PLUG	1
2A	9SG6604-1	CASE SIDE	1
	9SS24739-40	STAINLESS STEEL SCREW	12
3A	9SG6605-2	CASE SIDE	1
	9SS24739-40	STAINLESS STEEL SCREW	8
4A	9SG6469-1	CASE SIDE	1
	9SS24739-40	STAINLESS STEEL SCREW	8
5A	9SL12515-3	SIDE PANEL	1
	9SS24739-40	STAINLESS STEEL SCREW	4
7A	9SL12115-2	DOOR RAIL	1
	9SS24739-40	STAINLESS STEEL SCREW	9
8	9SS25719-4	EDGE GUARD	1
	9SL12514-4	DOOR ASBLY	1
9A	9SL12513-3	DOOR WELDED ASSEMBLY	1
9B	9SM20241	DOOR LATCH	1
	9ST12584-6	RIVET	4
	9ST14882-2	DOOR BUMPER	2
	9ST12584-6	RIVET	2
	9ST14882	DOOR BUMPER	2
9F	9SS27368-6	LOGO DECAL	1
9G	9SM21908	FAMILY NAME LOGO	1
12	9SL17074	REAR NAMEPLATE	1
13	9SM21436	CARBON MONOXIDE WARNING DECAL	1
14	9SS12934-1	COVER SEAL	1

Covers Assembly

KEY	PART NUMBER	DESCRIPTION	QTY
16	9SS27368-6	LOGO DECAL	1
17	9SM21908-1	FAMILY NAME LOGO	1
18	9SS20145-1	WARNING DECAL	1

Covers Assembly

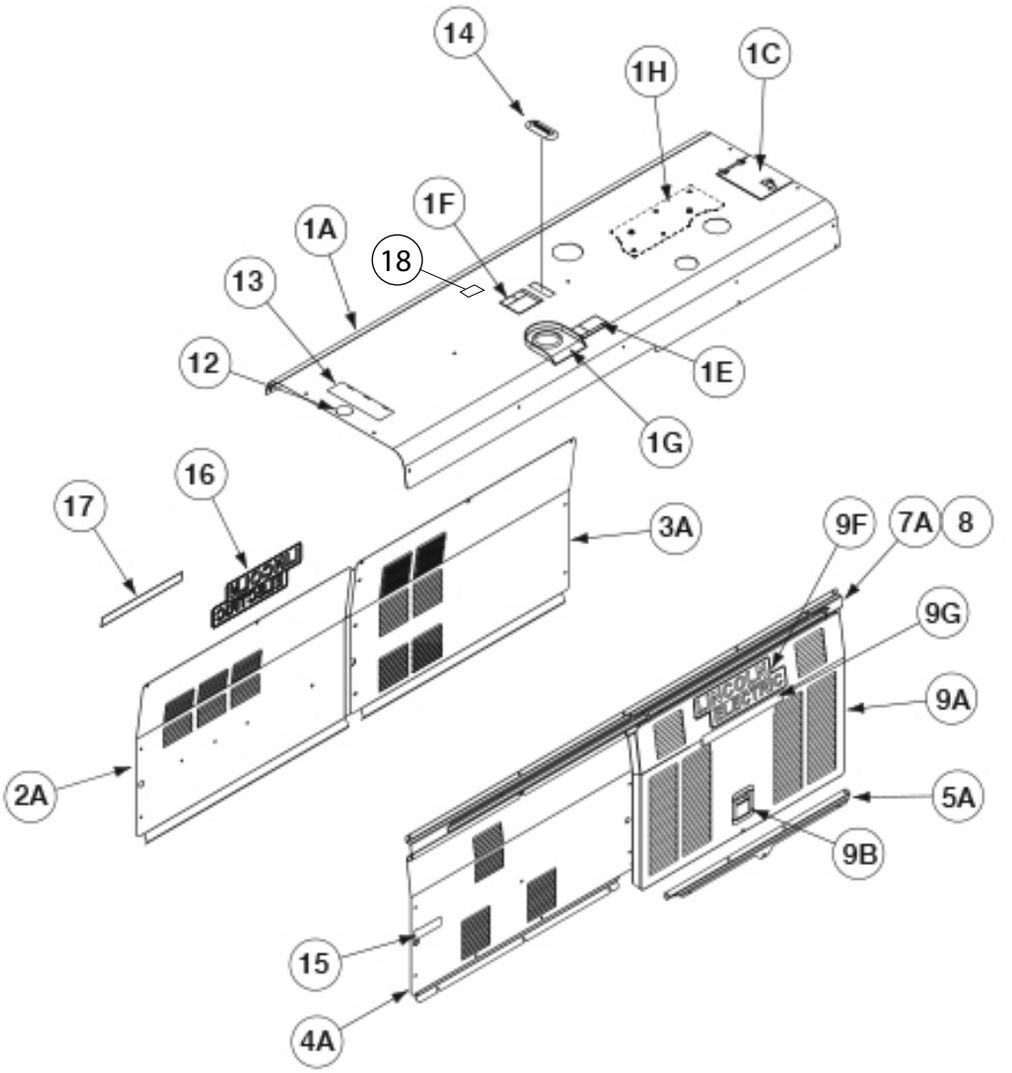

P-796-L.jpg

Printed 04/30/2016 at 09:52:21. Produced by Enigma.

WARNING	● Do not touch electrically live parts or electrode with skin or wet clothing. ● Insulate yourself from work and ground.	● Keep flammable materials away.	● Wear eye, ear and body protection.
Spanish **AVISO DE PRECAUCION**	● No toque las partes o los electrodos bajo carga con la piel o ropa mojada. ● Aislese del trabajo y de la tierra.	● Mantenga el material combustible fuera del área de trabajo.	● Protéjase los ojos, los oídos y el cuerpo.
French **ATTENTION**	● Ne laissez ni la peau ni des vêtements mouillés entrer en contact avec des pièces sous tension. ● Isolez-vous du travail et de la terre.	● Gardez à l'écart de tout matériel inflammable.	● Protégez vos yeux, vos oreilles et votre corps.
German **WARNUNG**	● Berühren Sie keine stromführenden Teile oder Elektroden mit Ihrem Körper oder feuchter Kleidung! ● Isolieren Sie sich von den Elektroden und dem Erdboden!	● Entfernen Sie brennbarres Material!	● Tragen Sie Augen-, Ohren- und Körperschutz!
Portuguese **ATENÇÃO**	● Não toque partes elétricas e electrodos com a pele ou roupa molhada. ● Isole-se da peça e terra.	● Mantenha inflamáveis bem guardados.	● Use proteção para a vista, ouvido e corpo.
Japanese **注意事項**	● 通電中の電気部品、又は溶材にヒフやぬれた布で触れないこと。 ● 施工物やアースから身体が絶縁されている様にして下さい。	● 燃えやすいものの側での溶接作業は絶対にしてはなりません。	● 目、耳及び身体に保護具をして下さい。
Chinese **警 告**	● 皮肤或濕衣物切勿接觸帶電部件及銲條。 ● 使你自己與地面和工件絶緣。	● 把一切易燃物品移離工作場所。	● 佩戴眼、耳及身體勞動保護用具。
Korean **위 험**	● 전도체나 용접봉을 젖은 헝겁 또는 피부로 절대 접촉치 마십시요. ● 모재와 접지를 접촉치 마십시요.	● 인화성 물질을 접근 시키지 마시요.	● 눈, 귀와 몸에 보호장구를 착용하십시요.
Arabic **تحذير**	● لا تلمس الاجزاء التي يسري فيها التيار الكهربائي أو الالكترود بجلد الجسم أو بالملابس المبللة بالماء. ● ضع عازلا على جسمك خلال العمل.	● ضع المواد القابلة للاشتعال في مكان بعيد.	● ضع أدوات وملابس واقية على عينيك وأذنيك وجسمك.

READ AND UNDERSTAND THE MANUFACTURER'S INSTRUCTION FOR THIS EQUIPMENT AND THE CONSUMABLES TO BE USED AND FOLLOW YOUR EMPLOYER'S SAFETY PRACTICES.

SE RECOMIENDA LEER Y ENTENDER LAS INSTRUCCIONES DEL FABRICANTE PARA EL USO DE ESTE EQUIPO Y LOS CONSUMIBLES QUE VA A UTILIZAR, SIGA LAS MEDIDAS DE SEGURIDAD DE SU SUPERVISOR.

LISEZ ET COMPRENEZ LES INSTRUCTIONS DU FABRICANT EN CE QUI REGARDE CET EQUIPMENT ET LES PRODUITS A ETRE EMPLOYES ET SUIVEZ LES PROCEDURES DE SECURITE DE VOTRE EMPLOYEUR.

LESEN SIE UND BEFOLGEN SIE DIE BETRIEBSANLEITUNG DER ANLAGE UND DEN ELEKTRODENEINSATZ DES HERSTELLERS. DIE UNFALLVERHÜTUNGSVORSCHRIFTEN DES ARBEITGEBERS SIND EBENFALLS ZU BEACHTEN.

● Keep your head out of fumes. ● Use ventilation or exhaust to remove fumes from breathing zone.	● Turn power off before servicing.	● Do not operate with panel open or guards off.	**WARNING**
● Los humos fuera de la zona de respiración. ● Mantenga la cabeza fuera de los humos. Utilice ventilación o aspiración para gases.	● Desconectar el cable de alimentación de poder de la máquina antes de iniciar cualquier servicio.	● No operar con panel abierto o guardas quitadas.	Spanish **AVISO DE PRECAUCION**
● Gardez la tête à l'écart des fumées. ● Utilisez un ventilateur ou un aspirateur pour ôter les fumées des zones de travail.	● Débranchez le courant avant l'entretien.	● N'opérez pas avec les panneaux ouverts ou avec les dispositifs de protection enlevés.	French **ATTENTION**
● Vermeiden Sie das Einatmen von Schweibrauch! ● Sorgen Sie für gute Be- und Entlüftung des Arbeitsplatzes!	● Strom vor Wartungsarbeiten abschalten! (Netzstrom völlig öffnen; Maschine anhalten!)	● Anlage nie ohne Schutzgehäuse oder Innenschutzverkleidung in Betrieb setzen!	German **WARNUNG**
● Mantenha seu rosto da fumaça. ● Use ventilação e exhaustão para remover fumo da zona respiratória.	● Não opere com as tampas removidas. ● Desligue a corrente antes de fazer serviço. ● Não toque as partes elétricas nuas.	● Mantenha-se afastado das partes moventes. ● Não opere com os paineis abertos ou guardas removidas.	Portuguese **ATENÇÃO**
● ヒュームから頭を離すようにして下さい。 ● 換気や排煙に十分留意して下さい。	● メンテナンス・サービスに取りかかる際には、まず電源スイッチを必ず切って下さい。	● パネルやカバーを取り外したままで機械操作をしないで下さい。	Japanese **注意事項**
● 頭部遠離煙霧。 ● 在呼吸區使用通風或排風器除煙。	● 維修前切斷電源。	● 儀表板打開或沒有安全罩時不準作業。	Chinese **警 告**
● 얼굴로부터 용접가스를 멀리하십시요. ● 호흡지역으로부터 용접가스를 제거하기 위해 가스제거기나 통풍기를 사용하십시요.	● 보수전에 전원을 차단하십시요.	● 판넬이 열린 상태로 작동치 마십시요.	Korean **위 험**
● ابعد رأسك بعيداً عن الدخان. ● استعمل التهوية أو جهاز ضغط الدخان للخارج لكي تبعد الدخان عن المنطقة التي تتنفس فيها.	● اقطع التيار الكهربائي قبل القيام بأية صيانة.	● لا تشغل هذا الجهاز اذا كانت الاغطية الحديدية الواقية ليست عليه.	Arabic **تحذير**

LEIA E COMPREENDA AS INSTRUÇÕES DO FABRICANTE PARA ESTE EQUIPAMENTO E AS PARTES DE USO, E SIGA AS PRÁTICAS DE SEGURANÇA DO EMPREGADOR.

使う機械や溶材のメーカーの指示書をよく読み、まず理解して下さい。そして貴社の安全規定に従って下さい。

請詳細閱讀並理解製造廠提供的説明以及應該使用的銀捍材料，並請遵守貴方的有関勞動保護規定。

이 제품에 동봉된 작업지침서를 숙지하시고 귀사의 작업자 안전수칙을 준수하시기 바랍니다.

اقرأ بتمعن وافهم تعليمات المصنع المنتج لهذه المعدات والمواد قبل استعمالها واتبع تعليمات الوقاية لصاحب العمل.

CUSTOMER ASSISTANCE POLICY

The business of The Lincoln Electric Company is manufacturing and selling high quality welding equipment, consumables, and cutting equipment. Our challenge is to meet the needs of our customers and to exceed their expectations. On occasion, purchasers may ask Lincoln Electric for advice or information about their use of our products. We respond to our customers based on the best information in our possession at that time. Lincoln Electric is not in a position to warrant or guarantee such advice, and assumes no liability, with respect to such information or advice. We expressly disclaim any warranty of any kind, including any warranty of fitness for any customer's particular purpose, with respect to such information or advice. As a matter of practical consideration, we also cannot assume any responsibility for updating or correcting any such information or advice once it has been given, nor does the provision of information or advice create, expand or alter any warranty with respect to the sale of our products.

Lincoln Electric is a responsive manufacturer, but the selection and use of specific products sold by Lincoln Electric is solely within the control of, and remains the sole responsibility of the customer. Many variables beyond the control of Lincoln Electric affect the results obtained in applying these types of fabrication methods and service requirements.

Subject to Change – This information is accurate to the best of our knowledge at the time of printing. Please refer to www.lincolnelectric.com for any updated information.

THE LINCOLN ELECTRIC COMPANY
22801 St. Clair Avenue • Cleveland, OH • 44117-1199 • U.S.A.
Phone: +1.216.481.8100 • www.lincolnelectric.com