SQUARE WAVE TIG 175 WIRING DIAGRAM L15798 REV: B

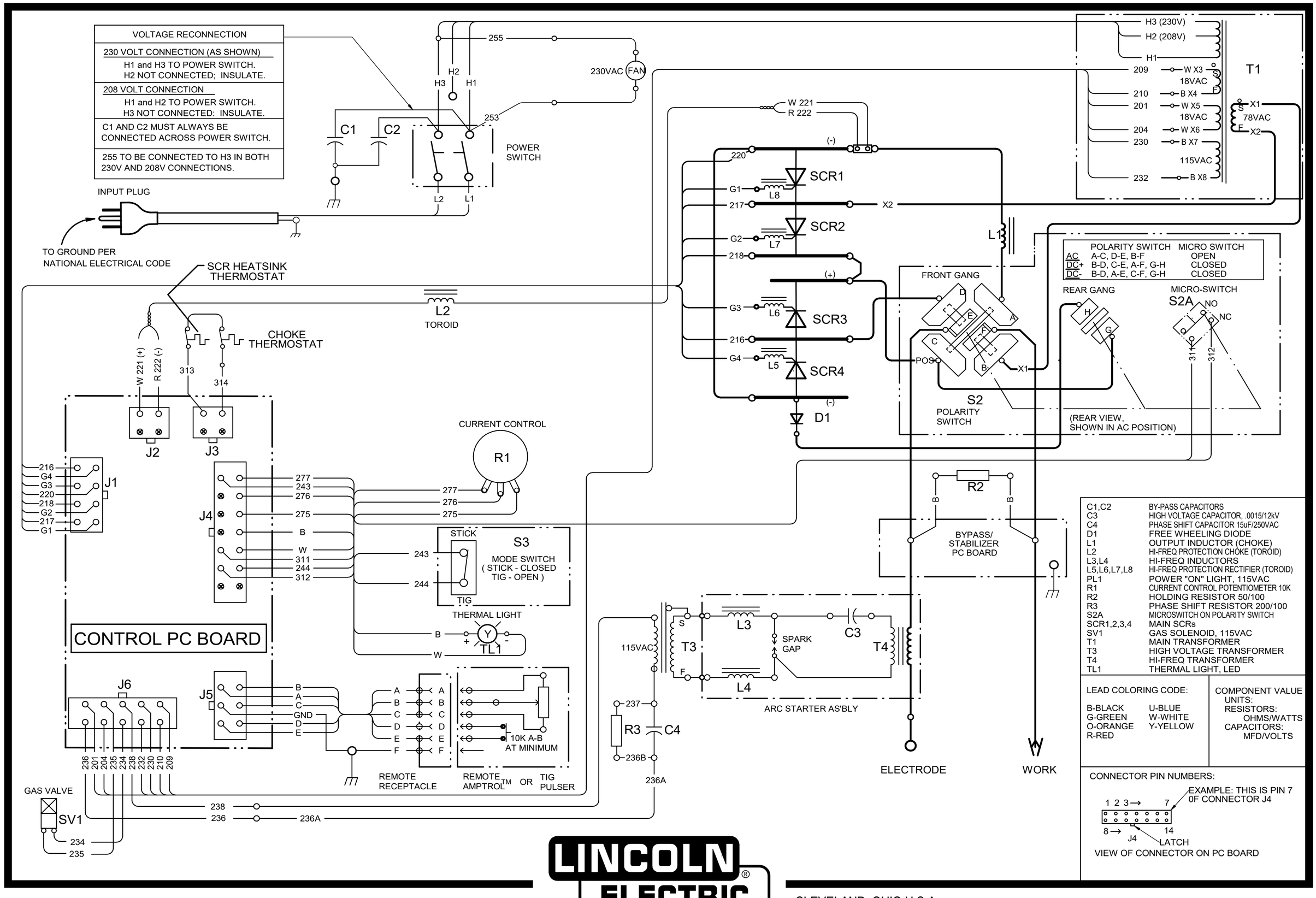

C1,C2	BY-PASS CAPACITORS
C3	HIGH VOLTAGE CAPACITOR, .0015/12kV
C4	PHASE SHIFT CAPACITOR 15uF/250VAC
D1	FREE WHEELING DIODE
L1	OUTPUT INDUCTOR (CHOKE)
L2	HI-FREQ PROTECTION CHOKE (TOROID)
L3,L4	HI-FREQ INDUCTORS
L5,L6,L7,L8	HI-FREQ PROTECTION RECTIFIER (TOROID)
PL1	POWER "ON" LIGHT, 115VAC
R1	CURRENT CONTROL POTENTIOMETER 10K
R2	HOLDING RESISTOR 50/100
R3	PHASE SHIFT RESISTOR 200/100
S2A	MICROSWITCH ON POLARITY SWITCH
SCR1,2,3,4	MAIN SCRs
SV1	GAS SOLENOID, 115VAC
T1	MAIN TRANSFORMER
T3	HIGH VOLTAGE TRANSFORMER
T4	HI-FREQ TRANSFORMER
TL1	THERMAL LIGHT, LED

LEAD COLORING CODE:

B-BLACK	U-BLUE
G-GREEN	W-WHITE
O-ORANGE	Y-YELLOW
R-RED	

COMPONENT VALUE
UNITS:
RESISTORS: OHMS/WATTS
CAPACITORS: MFD/VOLTS

CONNECTOR PIN NUMBERS:

VIEW OF CONNECTOR ON PC BOARD

LINCOLN ELECTRIC®

CLEVELAND, OHIO U.S.A.

4/23