RANGER 305D CE (UK) MACHINE SCHEMATIC L12213-1 REV: A

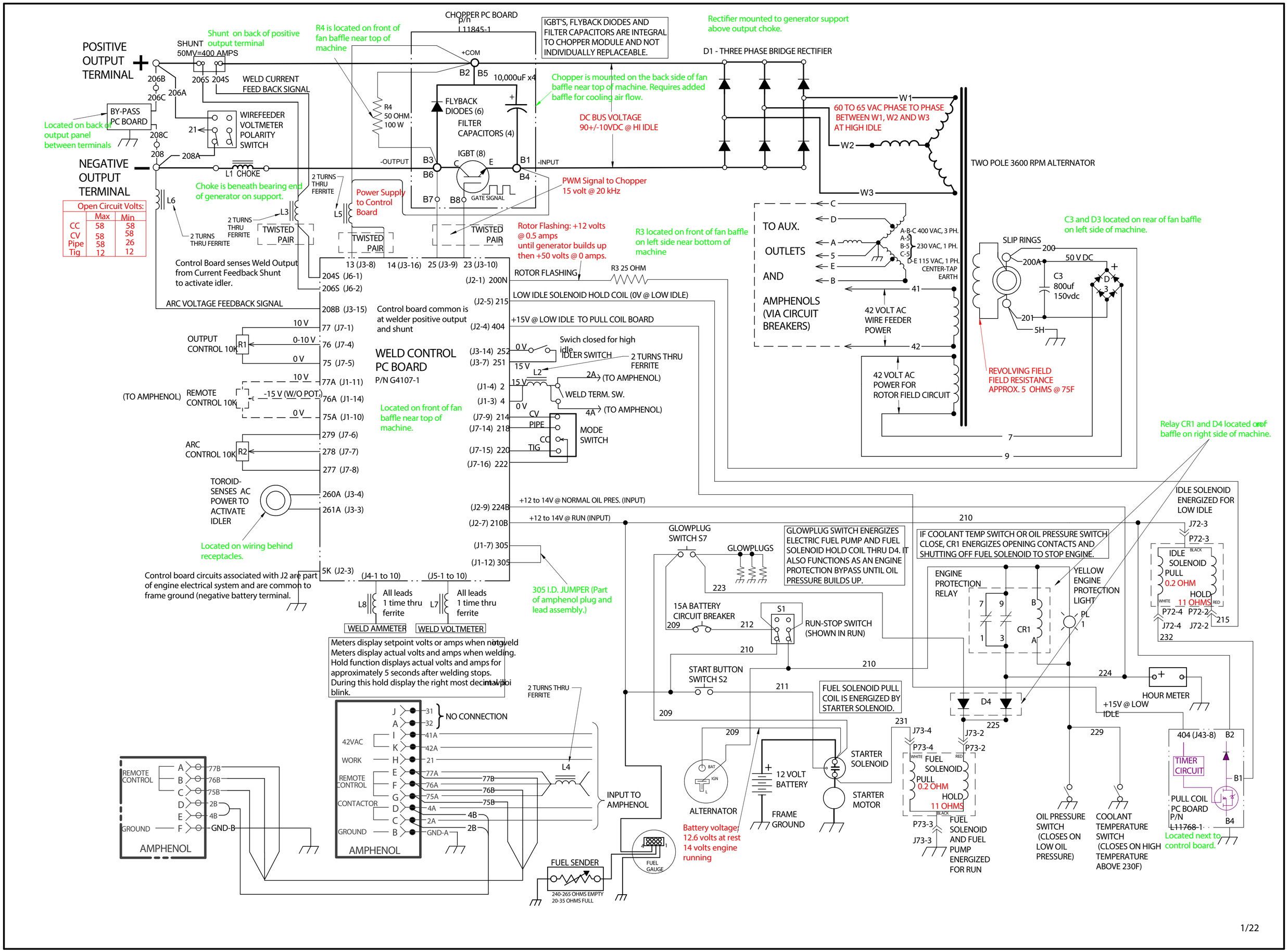

RANGER 305D CE (UK) MACHINE SCHEMATIC L12213-1 REV:A PAGE 2

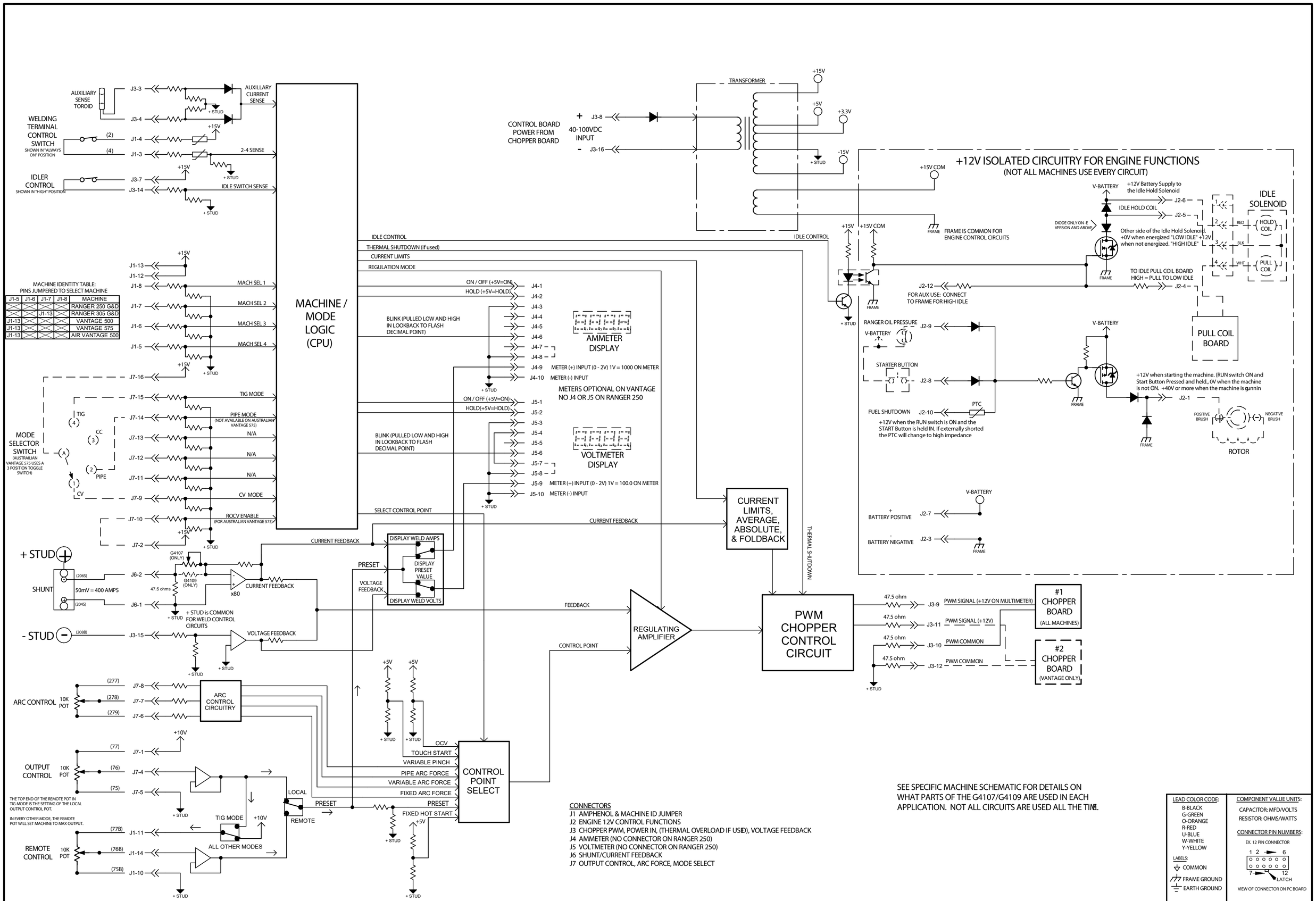

CONNECTORS
J1 AMPHENOL & MACHINE ID JUMPER
J2 ENGINE 12V CONTROL FUNCTIONS
J3 CHOPPER PWM, POWER IN, (THERMAL OVERLOAD IF USED), VOLTAGE FEEDBACK
J4 AMMETER (NO CONNECTOR ON RANGER 250)
J5 VOLTMETER (NO CONNECTOR ON RANGER 250)
J6 SHUNT/CURRENT FEEDBACK
J7 OUTPUT CONTROL, ARC FORCE, MODE SELECT

SEE SPECIFIC MACHINE SCHEMATIC FOR DETAILS ON WHAT PARTS OF THE G4107/G4109 ARE USED IN EACH APPLICATION. NOT ALL CIRCUITS ARE USED ALL THE TIME.

LEAD COLOR CODE:
B-BLACK
G-GREEN
O-ORANGE
R-RED
U-BLUE
W-WHITE
Y-YELLOW

LABELS:
COMMON
FRAME GROUND
EARTH GROUND

COMPONENT VALUE UNITS:
CAPACITOR: MFD/VOLTS
RESISTOR: OHMS/WATTS

CONNECTOR PIN NUMBERS:
EX. 12 PIN CONNECTOR
1 2 6
7 12
LATCH
VIEW OF CONNECTOR ON PC BOARD