Return to Master TOC
View Safety Info
Return to Master TOC
View Safety Info
Return to Master TOC
View Safety Info
Return to Master TOC
View Safety Info

LINCOLN ELECTRIC

GENUINE LINCOLN PARTS™

NOTE: This manual will cover most of the troubleshooting and repair procedures for the code numbers listed. Some variances may exist when troubleshooting/repairing later code numbers.

COMMANDER™ 300

For use with machines having Code Numbers:

10469 (Standard),
10470 (Deluxe)
10642, 10643

SERVICE MANUAL

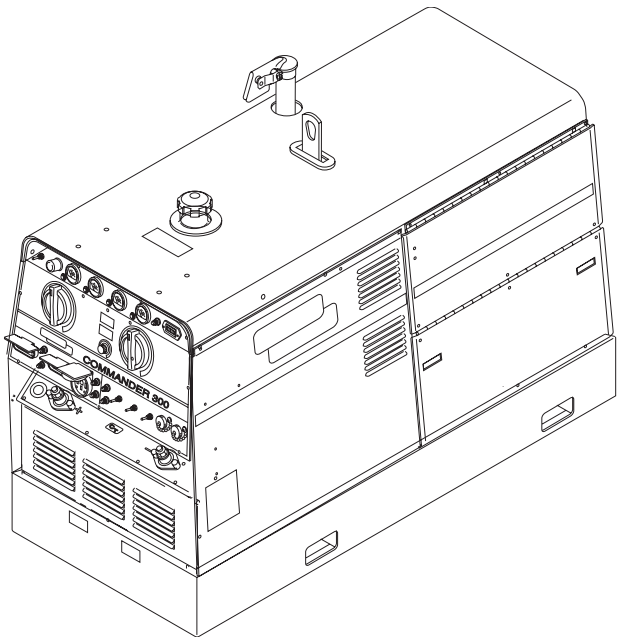

Need Help? Call 1.888.935.3877
to talk to a Service Representative

Hours of Operation:
8:00 AM to 6:00 PM (ET) Mon. thru Fri.

After hours?
Use "Ask the Experts" at lincolnelectric.com
A Lincoln Service Representative will contact you no later than the following business day.

For Service outside the USA:
Email: globalservice@lincolnelectric.com

SVM145-B | Issue Date 02 Sept
© Lincoln Global, Inc. All Rights Reserved.

THE LINCOLN ELECTRIC COMPANY
22801 St. Clair Avenue • Cleveland, OH • 44117-1199 • U.S.A.
Phone: +1.216.481.8100 • www.lincolnelectric.com

SAFETY

⚠ WARNING

⚠ CALIFORNIA PROPOSITION 65 WARNINGS ⚠

Diesel engine exhaust and some of its constituents are known to the State of California to cause cancer, birth defects, and other reproductive harm.

The Above For Diesel Engines

The engine exhaust from this product contains chemicals known to the State of California to cause cancer, birth defects, or other reproductive harm.

The Above For Gasoline Engines

ARC WELDING CAN BE HAZARDOUS. PROTECT YOURSELF AND OTHERS FROM POSSIBLE SERIOUS INJURY OR DEATH. KEEP CHILDREN AWAY. PACEMAKER WEARERS SHOULD CONSULT WITH THEIR DOCTOR BEFORE OPERATING.

Read and understand the following safety highlights. For additional safety information, it is strongly recommended that you purchase a copy of "Safety in Welding & Cutting - ANSI Standard Z49.1" from the American Welding Society, P.O. Box 351040, Miami, Florida 33135 or CSA Standard W117.2-1974. A Free copy of "Arc Welding Safety" booklet E205 is available from the Lincoln Electric Company, 22801 St. Clair Avenue, Cleveland, Ohio 44117-1199.

BE SURE THAT ALL INSTALLATION, OPERATION, MAINTENANCE AND REPAIR PROCEDURES ARE PERFORMED ONLY BY QUALIFIED INDIVIDUALS.



FOR ENGINE powered equipment.

1.a. Turn the engine off before troubleshooting and maintenance work unless the maintenance work requires it to be running.



1.b. Operate engines in open, well-ventilated areas or vent the engine exhaust fumes outdoors.



1.c. Do not add the fuel near an open flame welding arc or when the engine is running. Stop the engine and allow it to cool before refueling to prevent spilled fuel from vaporizing on contact with hot engine parts and igniting. Do not spill fuel when filling tank. If fuel is spilled, wipe it up and do not start engine until fumes have been eliminated.



1.d. Keep all equipment safety guards, covers and devices in position and in good repair.Keep hands, hair, clothing and tools away from V-belts, gears, fans and all other moving parts when starting, operating or repairing equipment.

1.e. In some cases it may be necessary to remove safety guards to perform required maintenance. Remove guards only when necessary and replace them when the maintenance requiring their removal is complete. Always use the greatest care when working near moving parts.

1.f. Do not put your hands near the engine fan. Do not attempt to override the governor or idler by pushing on the throttle control rods while the engine is running.

1.g. To prevent accidentally starting gasoline engines while turning the engine or welding generator during maintenance work, disconnect the spark plug wires, distributor cap or magneto wire as appropriate.



1.h. To avoid scalding, do not remove the radiator pressure cap when the engine is hot.

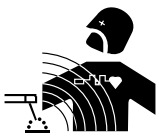

ELECTRIC AND MAGNETIC FIELDS may be dangerous

2.a. Electric current flowing through any conductor causes localized Electric and Magnetic Fields (EMF). Welding current creates EMF fields around welding cables and welding machines

2.b. EMF fields may interfere with some pacemakers, and welders having a pacemaker should consult their physician before welding.

2.c. Exposure to EMF fields in welding may have other health effects which are now not known.

2.d. All welders should use the following procedures in order to minimize exposure to EMF fields from the welding circuit:

2.d.1. Route the electrode and work cables together - Secure them with tape when possible.

2.d.2. Never coil the electrode lead around your body.

2.d.3. Do not place your body between the electrode and work cables. If the electrode cable is on your right side, the work cable should also be on your right side.

2.d.4. Connect the work cable to the workpiece as close as possible to the area being welded.

2.d.5. Do not work next to welding power source.

Mar '95

LINCOLN® ELECTRIC

Return to Master TOC
Return to Master TOC
Return to Master TOC
Return to Master TOC

SAFETY

Return to Master TOC

Return to Master TOC

Return to Master TOC

Return to Master TOC



ELECTRIC SHOCK can kill.

3.a. The electrode and work (or ground) circuits are electrically “hot” when the welder is on. Do not touch these “hot” parts with your bare skin or wet clothing. Wear dry, hole-free gloves to insulate hands.

3.b. Insulate yourself from work and ground using dry insulation. Make certain the insulation is large enough to cover your full area of physical contact with work and ground.

In addition to the normal safety precautions, if welding must be performed under electrically hazardous conditions (in damp locations or while wearing wet clothing; on metal structures such as floors, gratings or scaffolds; when in cramped positions such as sitting, kneeling or lying, if there is a high risk of unavoidable or accidental contact with the workpiece or ground) use the following equipment:

- **Semiautomatic DC Constant Voltage (Wire) Welder.**
- **DC Manual (Stick) Welder.**
- **AC Welder with Reduced Voltage Control.**

3.c. In semiautomatic or automatic wire welding, the electrode, electrode reel, welding head, nozzle or semiautomatic welding gun are also electrically “hot”.

3.d. Always be sure the work cable makes a good electrical connection with the metal being welded. The connection should be as close as possible to the area being welded.

3.e. Ground the work or metal to be welded to a good electrical (earth) ground.

3.f. Maintain the electrode holder, work clamp, welding cable and welding machine in good, safe operating condition. Replace damaged insulation.

3.g. Never dip the electrode in water for cooling.

3.h. Never simultaneously touch electrically “hot” parts of electrode holders connected to two welders because voltage between the two can be the total of the open circuit voltage of both welders.

3.i. When working above floor level, use a safety belt to protect yourself from a fall should you get a shock.

3.j. Also see Items 6.c. and 8.



ARC RAYS can burn.

4.a. Use a shield with the proper filter and cover plates to protect your eyes from sparks and the rays of the arc when welding or observing open arc welding. Headshield and filter lens should conform to ANSI Z87. I standards.

4.b. Use suitable clothing made from durable flame-resistant material to protect your skin and that of your helpers from the arc rays.

4.c. Protect other nearby personnel with suitable, non-flammable screening and/or warn them not to watch the arc nor expose themselves to the arc rays or to hot spatter or metal.



FUMES AND GASES can be dangerous.

5.a. Welding may produce fumes and gases hazardous to health. Avoid breathing these fumes and gases.When welding, keep your head out of the fume. Use enough ventilation and/or exhaust at the arc to keep fumes and gases away from the breathing zone. **When welding with electrodes which require special ventilation such as stainless or hard facing (see instructions on container or MSDS) or on lead or cadmium plated steel and other metals or coatings which produce highly toxic fumes, keep exposure as low as possible and below Threshold Limit Values (TLV) using local exhaust or mechanical ventilation. In confined spaces or in some circumstances, outdoors, a respirator may be required. Additional precautions are also required when welding on galvanized steel.**

5.b. Do not weld in locations near chlorinated hydrocarbon vapors coming from degreasing, cleaning or spraying operations. The heat and rays of the arc can react with solvent vapors to form phosgene, a highly toxic gas, and other irritating products.

5.c. Shielding gases used for arc welding can displace air and cause injury or death. Always use enough ventilation, especially in confined areas, to insure breathing air is safe.

5.d. Read and understand the manufacturer’s instructions for this equipment and the consumables to be used, including the material safety data sheet (MSDS) and follow your employer’s safety practices. MSDS forms are available from your welding distributor or from the manufacturer.

5.e. Also see item 1.b.

Mar ‘95

Return to Master TOC
Return to Master TOC
Return to Master TOC
Return to Master TOC

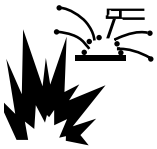

WELDING SPARKS can cause fire or explosion.

6.a. Remove fire hazards from the welding area. If this is not possible, cover them to prevent the welding sparks from starting a fire. Remember that welding sparks and hot materials from welding can easily go through small cracks and openings to adjacent areas. Avoid welding near hydraulic lines. Have a fire extinguisher readily available.

6.b. Where compressed gases are to be used at the job site, special precautions should be used to prevent hazardous situations. Refer to “Safety in Welding and Cutting” (ANSI Standard Z49.1) and the operating information for the equipment being used.

6.c. When not welding, make certain no part of the electrode circuit is touching the work or ground. Accidental contact can cause overheating and create a fire hazard.

6.d. Do not heat, cut or weld tanks, drums or containers until the proper steps have been taken to insure that such procedures will not cause flammable or toxic vapors from substances inside. They can cause an explosion even though they have been “cleaned”. For information, purchase “Recommended Safe Practices for the Preparation for Welding and Cutting of Containers and Piping That Have Held Hazardous Substances”, AWS F4.1 from the American Welding Society (see address above).

6.e. Vent hollow castings or containers before heating, cutting or welding. They may explode.

6.f. Sparks and spatter are thrown from the welding arc. Wear oil free protective garments such as leather gloves, heavy shirt, cuffless trousers, high shoes and a cap over your hair. Wear ear plugs when welding out of position or in confined places. Always wear safety glasses with side shields when in a welding area.

6.g. Connect the work cable to the work as close to the welding area as practical. Work cables connected to the building framework or other locations away from the welding area increase the possibility of the welding current passing through lifting chains, crane cables or other alternate circuits. This can create fire hazards or overheat lifting chains or cables until they fail.

6.h. Also see item 1.c.

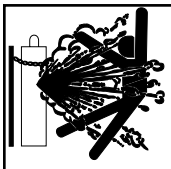

CYLINDER may explode if damaged.

7.a. Use only compressed gas cylinders containing the correct shielding gas for the process used and properly operating regulators designed for the gas and pressure used. All hoses, fittings, etc. should be suitable for the application and maintained in good condition.

7.b. Always keep cylinders in an upright position securely chained to an undercarriage or fixed support.

7.c. Cylinders should be located:

- Away from areas where they may be struck or subjected to physical damage.
- A safe distance from arc welding or cutting operations and any other source of heat, sparks, or flame.

7.d. Never allow the electrode, electrode holder or any other electrically “hot” parts to touch a cylinder.

7.e. Keep your head and face away from the cylinder valve outlet when opening the cylinder valve.

7.f. Valve protection caps should always be in place and hand tight except when the cylinder is in use or connected for use.

7.g. Read and follow the instructions on compressed gas cylinders, associated equipment, and CGA publication P-l, “Precautions for Safe Handling of Compressed Gases in Cylinders,” available from the Compressed Gas Association 1235 Jefferson Davis Highway, Arlington, VA 22202.



FOR ELECTRICALLY powered equipment.

8.a. Turn off input power using the disconnect switch at the fuse box before working on the equipment.

8.b. Install equipment in accordance with the U.S. National Electrical Code, all local codes and the manufacturer’s recommendations.

8.c. Ground the equipment in accordance with the U.S. National Electrical Code and the manufacturer’s recommendations.

Mar ‘95

Return to Master TOC
Return to Master TOC
Return to Master TOC
Return to Master TOC

PRÉCAUTIONS DE SÛRETÉ

Pour votre propre protection lire et observer toutes les instructions et les précautions de sûreté specifiques qui parraissent dans ce manuel aussi bien que les précautions de sûreté générales suivantes:

Sûreté Pour Soudage A L'Arc

1. Protegez-vous contre la secousse électrique:

   a. Les circuits à l'électrode et à la piéce sont sous tension quand la machine à souder est en marche. Eviter toujours tout contact entre les parties sous tension et la peau nue ou les vétements mouillés. Porter des gants secs et sans trous pour isoler les mains.
   b. Faire trés attention de bien s'isoler de la masse quand on soude dans des endroits humides, ou sur un plancher metallique ou des grilles metalliques, principalement dans les positions assis ou couché pour lesquelles une grande partie du corps peut être en contact avec la masse.
   c. Maintenir le porte-électrode, la pince de masse, le câble de soudage et la machine à souder en bon et sûr état defonctionnement.
   d.Ne jamais plonger le porte-électrode dans l'eau pour le refroidir.
   e. Ne jamais toucher simultanément les parties sous tension des porte-électrodes connectés à deux machines à souder parce que la tension entre les deux pinces peut être le total de la tension à vide des deux machines.
   f. Si on utilise la machine à souder comme une source de courant pour soudage semi-automatique, ces precautions pour le porte-électrode s'applicuent aussi au pistolet de soudage.

2. Dans le cas de travail au dessus du niveau du sol, se protéger contre les chutes dans le cas ou on recoit un choc. Ne jamais enrouler le câble-électrode autour de n'importe quelle partie du corps.

3. Un coup d'arc peut être plus sévère qu'un coup de soliel, donc:

   a. Utiliser un bon masque avec un verre filtrant approprié ainsi qu'un verre blanc afin de se protéger les yeux du rayonnement de l'arc et des projections quand on soude ou quand on regarde l'arc.
   b. Porter des vêtements convenables afin de protéger la peau de soudeur et des aides contre le rayonnement de l'arc.
   c. Protéger l'autre personnel travaillant à proximité au soudage à l'aide d'écrans appropriés et non-inflammables.

4. Des gouttes de laitier en fusion sont émises de l'arc de soudage. Se protéger avec des vêtements de protection libres de l'huile, tels que les gants en cuir, chemise épaisse, pantalons sans revers, et chaussures montantes.

5. Toujours porter des lunettes de sécurité dans la zone de soudage. Utiliser des lunettes avec écrans lateraux dans les zones où l'on pique le laitier.

6. Eloigner les matériaux inflammables ou les recouvrir afin de prévenir tout risque d'incendie dû aux étincelles.

7. Quand on ne soude pas, poser la pince à une endroit isolé de la masse. Un court-circuit accidental peut provoquer un échauffement et un risque d'incendie.

8. S'assurer que la masse est connectée le plus prés possible de la zone de travail qu'il est pratique de le faire. Si on place la masse sur la charpente de la construction ou d'autres endroits éloignés de la zone de travail, on augmente le risque de voir passer le courant de soudage par les chaines de levage, câbles de grue, ou autres circuits. Cela peut provoquer des risques d'incendie ou d'echauffement des chaines et des câbles jusqu'à ce qu'ils se rompent.

9. Assurer une ventilation suffisante dans la zone de soudage. Ceci est particuliérement important pour le soudage de tôles galvanisées plombées, ou cadmiées ou tout autre métal qui produit des fumeés toxiques.

10. Ne pas souder en présence de vapeurs de chlore provenant d'opérations de dégraissage, nettoyage ou pistolage. La chaleur ou les rayons de l'arc peuvent réagir avec les vapeurs du solvant pour produire du phosgéne (gas fortement toxique) ou autres produits irritants.

11. Pour obtenir de plus amples renseignements sur la sûreté, voir le code "Code for safety in welding and cutting" CSA Standard W 117.2-1974.

PRÉCAUTIONS DE SÛRETÉ POUR LES MACHINES À SOUDER À TRANSFORMATEUR ET À REDRESSEUR

1. Relier à la terre le chassis du poste conformement au code de l'électricité et aux recommendations du fabricant. Le dispositif de montage ou la piece à souder doit être branché à une bonne mise à la terre.

2. Autant que possible, l'installation et l'entretien du poste seront effectués par un électricien qualifié.

3. Avant de faires des travaux à l'interieur de poste, la debrancher à l'interrupteur à la boite de fusibles.

4. Garder tous les couvercles et dispositifs de sûreté à leur place.

Mar. '93

MASTER TABLE OF CONTENTS FOR ALL SECTIONS

Page

Safety ..... i-iv

Installation ..... **Section A**

Technical Specifications A-2
Safety Precautions A-3
Location and Ventilation A-3
Pre-Operation Engine Service A-4
Electrical Output Connections A-6

Operation ..... **Section B**

Safety Instructions B-2
General Description B-3
Recommended Applications B-3
Design Features B-3
Welding Capability B-4
Controls and Settings B-4
Engine Operation B-8
Welder Operation B-9
Auxiliary Power Operation B-11

Accessories ..... **Section C**

Maintenance ..... **Section D**

Theory of Operation ..... **Section E**

Troubleshooting and Repair ..... **Section F**

Electrical Diagrams ..... **Section G**

Parts Manual **P334**

TABLE OF CONTENTS
- INSTALLATION SECTION -

Installation ..... **Section A**
Technical Specifications A-2
Input - Diesel Engine A-2
Rated Output - Welder A-2
Output - Welder and Generator A-2
Physical Dimensions A-2
Safety Precautions A-3
Location and Ventilation A-3
Storing A-3
Stacking A-3
Angle of Operation A-3
Lifting A-4
High Altitude Operation A-4
Towing A-4
Pre-Operation Engine Service A-4
Oil A-5
Fuel A-5
Cooling System A-5
Battery Connections A-5
Muffler Outlet Pipe A-5
Spark Arrester A-5
High Frequency Generation for TIG Applications A-6
Remote Control A-6
Welding Terminals A-6
Electrical Output Connections A-6
Welding Cable Connections A-7
Cable Installation, Polarity Control, and Cable Sizes A-7
Machine Grounding A-8
Auxiliary Power Receptacles A-8
Standby Power Connections A-8

Return to Master TOC
Return to Master TOC
Return to Master TOC
Return to Master TOC

INSTALLATION

TECHNICAL SPECIFICATIONS - Commander 300

INPUT - DIESEL ENGINE					
Make/Model	**Description**	**Speed (RPM)**	**Displacement**	**Starting System**	**Capacities**
Deutz F3L 1011F	3 cylinder Air/cooled diesel 31 HP @ 1800 RPM	1800 Full Load 1900 High Idle 1400 Low Idle	125 cu. in. (2.05 liters)	Electric 12 VDC	Fuel: 25 gal. (94.6 liters) Oil: 6.3 qt. (6.0 liters)

RATED OUTPUT - WELDER		
Duty Cycle	**Welding Output**	**Volts at Rated Amps**
100%	300 amps (DC Multi-purpose)	32 volts
60%	375 amps (DC Multi-purpose)	34 volts

OUTPUT - WELDER AND GENERATOR		
Welding Range	**Max. Open Circuit Voltage**	**Auxiliary Power[1]**
30 - 300 Amps DC in 5 Ranges	87 OCV @ 1900 RPM	120/240 VAC 10,000 Watts, 60 Hz. 100% Duty Cycle

PHYSICAL DIMENSIONS			
Height[2]	**Width**	**Depth**	**Weight**
42.0 in. 1066.8 mm	31.5 in. 800.1 mm	63.1 in. 1602.7 mm	1325 lbs. 1683 lbs.(601 kg)

[1] Output rating in watts is equivalent to volt-amperes at unity power factor.
Output voltage is within +/- 10% at all loads up to rated capacity. When welding, available auxiliary power will be reduced.

[2] Top of Enclosure. Add 8.9" (16mm) for exhaust.

Return to Section TOC
Return to Master TOC
Return to Section TOC
Return to Master TOC
Return to Section TOC
Return to Master TOC
Return to Section TOC
Return to Master TOC

INSTALLATION

Read this entire installation section before you start installation.

SAFETY PRECAUTIONS

⚠ WARNING

Do not attempt to use this equipment until you have thoroughly read all the operation and maintenance manuals supplied with your machine. They include important safety precautions; detailed engine starting, operating and maintenance instructions and parts lists.

ELECTRIC SHOCK can kill.



- Do not touch electrically live parts such as output terminals or internal wiring.
- Insulate yourself from the work and ground.
- Always wear dry insulating gloves.

ENGINE EXHAUST can kill.



- Use in open, well ventilated areas or vent exhaust outside.
- Do not stack anything near the engine.

MOVING PARTS can injure.



- Do not operate with doors open or guards off.
- Stop the engine before servicing.
- Keep away from moving parts.

See additional safety information at the front of this manual.

Only qualified personnel should install, use, or service this equipment.

LOCATION AND VENTILATION

The welder should be located to provide an unrestricted flow of clean, cool air. Also, locate the welder so that the engine exhaust fumes are properly vented to an outside area.

STORING

1. Store the machine in a cool, dry place when it is not in use. Protect it from dust and dirt. Keep it where it can't be accidentally damaged from construction activities, moving vehicles, and other hazards.
2. Drain the engine oil and refill with fresh 10W30 oil. Run the engine for about five minutes to circulate oil to all the parts. See the ***Maintenance*** section of this manual for details on changing oil.
3. Remove the battery, recharge it, and adjust the electrolyte level. Store the battery in a dry, dark place.
4. See your engine operation manual for further information on fuel and engine preservation.

STACKING

Commander 300 machines CANNOT be stacked.

ANGLE OF OPERATION

To achieve optimum engine performance the Commander 300 should be run in a level position. The maximum angle of operation for the Deutz engine is 20 degrees in a direction to cause the control panel to be angled up, 30 degrees for side to side tilting and for the control panel to be angled down. If the engine is to be operated at an angle, provisions must be made for checking and maintaining the oil level at the normal (FULL) oil capacity in the crankcase. When operating the welder at an angle, the effective fuel capacity will be slightly less than the specified 25 gallons (94.6 liters).

Return to Section TOC
Return to Master TOC

Return to Section TOC
Return to Master TOC

LIFTING

The Commander 300 weighs 1325 lb./601 kg. A lift bail is provided for lifting with a hoist.

⚠ WARNING

FALLING EQUIPMENT can cause injury.



Do not lift this machine using lift bail if it is equipped with a heavy accessory such as a trailer.

Lift only with equipment of adequate lifting capacity. Be sure machine is stable when lifting.

The Commander is shipped with the lift bail retracted. Before attempting to lift the Commander, secure the lift bail in a raised position. Secure the lift bail as follows:

a. Open the engine compartment door.

b. Locate the two access holes on the upper middle region of compartment wall just below the lift bail.

c. Use the lifting strap to raise the lift bail to the full upright position. This will align the mounting holes on the lift bail with the access holes.

d. Secure the lift bail with two thread forming screws. The screws are provided in the shipped loose parts bag.

HIGH ALTITUDE OPERATION

At higher altitudes, output derating may be necessary. For maximum rating, derate the welder output 5% for every 300 meters (984 ft.) above 1500 meters (4920 ft.). For output of 300A and below, derate the welder output 5% for every 300 meters (984 ft.) above 2100 meters (6888 ft.)

Contact a Deutz Service Representative for any engine adjustments that may be required.

TOWING

The recommended trailer for use with this equipment for road, in-plant and yard towing by a vehicle is Lincoln's K953-1. If the user adapts a non-Lincoln trailer, he must assume responsibility that the method of attachment and usage does not result in a safety hazard nor damage the welding equipment. Some of the factors to consider are as follows:

1. Design capacity of trailer vs. the weight of the Lincoln equipment and likely additional attachments.
2. Proper support of, and attachment to, the base of the welding equipment so that there will be no undue stress to the trailer's framework.
3. Proper placement of the equipment on the trailer to insure stability side to side and front to back when the trailer is being moved and when standing by itself.
4. Typical conditions of use, such as travel speed, roughness of surface on which the trailer will be operated, environmental conditions, and likely maintenance.
5. Proper preventative maintenance of trailer.
6. Conformance with federal, state and local laws.[1]

[1] Consult applicable federal, state and local laws regarding specific requirements for use on public highways.

PRE-OPERATION ENGINE SERVICE

Read and understand the information about the diesel engine in the ***Operation*** and ***Maintenance*** sections of this manual before you operate the Commander 300.

⚠ WARNING



- Keep hands away from the engine muffler or HOT engine parts.
- Stop the engine and allow it to cool before fueling.
- Do not smoke when fueling.
- Remove the fuel cap slowly to release pressure.
- Fill the fuel tank at a moderate rate and do not overfill.
- Wipe up spilled fuel and allow the fumes to clear before starting the engine.
- Keep sparks and flame away from the fuel tank.

INSTALLATION

OIL

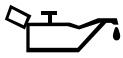

The Commander 300 is shipped with the engine crankcase filled with high quality SAE 1OW-30 oil (API class CD or better). **CHECK THE OIL LEVEL BEFORE YOU START THE ENGINE.** If it is not up to the FULL mark on the dip-stick, add oil as required. Check the oil every four hours of running time during the first 35 running hours. Refer to the engine operatorís manual for specific oil recommendations and break-in information. The oil change interval is dependent on the quality of the oil and the operating environment. Refer to the engine operatorís manual for the proper service and maintenance intervals.

For more oil fill and service information, see the *Maintenance* section of this manual.

FUEL

Use Diesel fuel only.



Fill the fuel tank with clean, fresh diesel fuel. The Commander 300 has 25 gallon (94.6 liter) fuel tank. See the engine operatorís manual for specific fuel recommendations. The Commander 300 Deluxe is protected by a low fuel shutdown to prevent the engine from running out of fuel. The machine will indicate a low fuel condition by turning on the low fuel light. Once the light comes on, the machine will have thirty minutes before it shuts down. The operator can override this feature by restarting the engine, which restarts the timer. The amount of reserve fuel remaining in the tank after the first shutdown will vary from machine to machine. The operator must determine the amount of fuel remaining before restarting the machine. **Running out of fuel may require bleeding the fuel injection pump.**

NOTE: Before starting the engine, open the fuel shut-off valve. The pointer on the valve should be in line with the hose.

FUEL CAP

Remove the plastic cap covering from the fuel tank filler neck and install the fuel cap.

COOLING SYSTEM

The Deutz engine is air cooled by a belt-driven axial blower. The oil cooler and engine cooling fins should be blown out with compressed air or steam to maintain proper cooling. See the engine operator's manual for procedures and frequency.

BATTERY CONNECTIONS

⚠ WARNING



BATTERY ACID CAN BURN EYES AND SKIN.

- **Wear gloves and eye protection and be careful when working near a battery. Follow the instructions printed on the battery.**

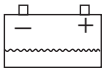

The Commander 300 is shipped with the negative battery cable disconnected. Before you operate the machine, make sure the IGNITION switch is in the OFF position and remove and discard the insulating cap from the negative battery terminal. Attach the disconnected cable securely to the battery terminal. If the battery is discharged and won't start the engine, see the battery charging instructions in the ***Maintenance*** section.

MUFFLER OUTLET PIPE

Remove the plastic plug covering the muffler outlet tube. Using the clamp provided, secure the outlet pipe to the outlet tube with the pipe positioned so that it will direct exhaust in the desired direction.

SPARK ARRESTER

Diesel engine mufflers may emit sparks when the engine is running. Some federal, state, or local laws require spark arresters in locations where unarrested sparks could present a fire hazard.

Standard mufflers (like the one included with the Commander 300) do not act as spark arresters. When local laws require it, a spark arrester must be installed on the machine and properly maintained. An optional spark arrester kit (K903-1) is available for your Commander 300. See the ***Accessories*** section of this manual for more information.

⚠ CAUTION

An incorrect spark arrester may lead to engine damage or may adversely affect performance.

LINCOLN® ELECTRIC

Return to Section TOC
Return to Master TOC
Return to Section TOC
Return to Master TOC
Return to Section TOC
Return to Master TOC
Return to Section TOC
Return to Master TOC

Return to Section TOC
Return to Master TOC

HIGH FREQUENCY GENERATORS FOR TIG APPLICATIONS

The K799 Hi-Freq Unit and the K930-1 or –2 TIG Module can be used with the Commander 300. The machine is equipped with the required RF bypass circuitry for the connection of high frequency generating equipment. The high frequency bypass network supplied with the K799 Hi-Freq Unit does NOT need to be installed into the Commander 300.

The Commander 300 and any high frequency generating equipment must be properly grounded. See the K799 Hi-Freq Unit and the K930-1 or –2 TIG Module operating manuals for complete instructions on installation, operation, and maintenance.

REMOTE CONTROL

The Commander 300 is equipped with a 6-pin and a 14-pin connector. The 6-pin connector is for connecting the K857 or K857-1 Remote Control (optional) or the K870 hand Amptrol or K812 foot Amptrol (TIG applications).

The 14-pin connector is used to connect a wire feeder or K930-1 or –2 TIG Module control cable. When remote output control is used, the output control toggle switch must be set at REMOTE.

NOTE: When using the 14-pin connector, do NOT connect anything to the 6-pin connector if the wire feeder has a built-in power source output control.

Also see the ***Accessories*** section of this manual for more information on wire feeder connections.

WELDING TERMINALS

The Commander 300 has a toggle switch for selecting “hot” welding terminals (WELDING TERMINALS ALWAYS ON position) or “cold” welding terminals (WELDING TERMINALS REMOTELY CONTROLLED position).

ELECTRICAL OUTPUT CONNECTIONS

See Figure A.1 for the location of the 120 and 240 volt receptacles, weld output terminals, and ground stud.

FIGURE A.1 - Commander 300 OUTPUT CONNECTIONS

1. 120 VOLT, 20 AMP RECEPTACLES (2)
2. 120/240 VOLT, 50 AMP RECEPTACLE
3. WELD OUTPUT TERMINALS
4. GROUND STUD

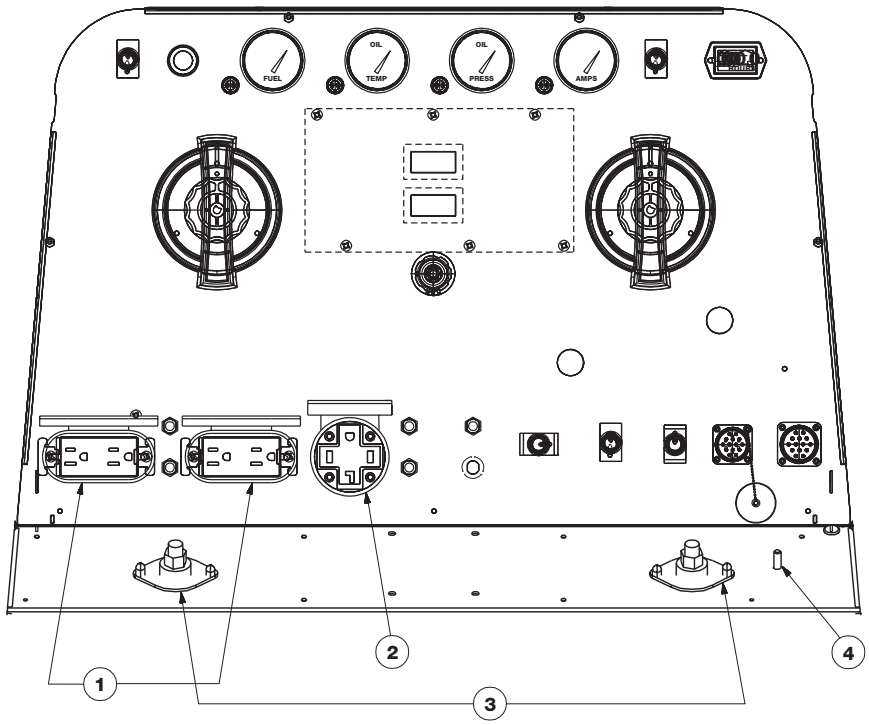

WELDING CABLE CONNECTIONS

CABLE INSTALLATION, POLARITY CONTROL, AND CABLE SIZES

With the engine off, route the electrode and work cables through the strain relief bracket on the base front and connect them to the terminals. (See size recommendations below.) For positive polarity, connect the electrode cable to the terminal marked Positive (+). For Negative polarity, connect the electrode cable to the Negative (-) terminal. These connections should be checked periodically and tightened if necessary.

⚠ CAUTION

- Loose connections will cause the output terminals to overheat. The terminals may eventually melt.
- Do not cross the welding cables at the output terminal connection. Keep the cables isolated and separate from one another.

When welding at a considerable distance from the welder, be sure you use ample size welding cables. Table A.1 lists recommended cable sizes and lengths for rated current and duty cycle. Length refers to the distance from the welder to the work and back to the welder. Cable diameters are increased for long cable lengths to reduce voltage drops.

Lincoln Electric offers a welding accessory kit with properly specified welding cables. See the ***Accessories*** section of this manual for more information.

TABLE A.1 - RECOMMENDED WELDING CABLE SIZE AND LENGTH
TOTAL COMBINED LENGTH OF ELECTRODE AND WORK CABLES

Amps @ 100% Duty Cycle	Cable sizes for combined length of electrode plus work cable		
	Up to 150 ft.	150 - 200 ft.	200 - 250 ft.
300	2/0 AWG	2/0 AWG	3/0 AWG

Return to Section TOC
Return to Master TOC
Return to Section TOC
Return to Master TOC
Return to Section TOC
Return to Master TOC
Return to Section TOC
Return to Master TOC

Return to Section TOC
Return to Master TOC

MACHINE GROUNDING

Because this portable engine-driven welder creates its own power, you do not need to connect the machine frame to an earth ground, unless the machine is connected to premises wiring (home, shop, etc.).

To prevent dangerous electric shock, other equipment powered by the Commander 300 must:

a) be grounded to the frame of the welder using a grounded type plug,

or

b) be double insulated.

When the Commander 300 is mounted to a truck or trailer, its frame must be securely connected to the metal frame of the vehicle. When connected to premises wiring such as a home or shop, its frame must be connected to the system earth ground. See further connection instructions in the section titled Standby Power Connections as well as the article on grounding the latest U.S. National Electrical Code and the local code.

In general, if the machine is to be grounded, it should be connected with a #8 AWG or larger copper wire to a solid earth ground such as a metal water pipe going into the ground for at least ten feet and having no insulated joints, or to the metal framework of a building that has been effectively grounded. The U.S. National Electrical Code lists a number of alternate means of grounding electrical equipment. A machine grounding stud marked with the ⏚ symbol is provided on the front of the welder.

AUXILIARY POWER RECEPTACLES

The auxiliary power capacity of the Commander 300 is 10,000 watts of 60 Hz, single phase power. The auxiliary power capacity rating in watts is equivalent to volt-amperes at unity power factor. The maximum permissible current of the 240 VAC output is 44 A. The 240 VAC output can be split to provide two separate 120 VAC outputs with a maximum permissible current of 44A per output to two separate 120 VAC branch circuits. The output voltage is within ±10% at all loads up to rated capacity.

NOTE: The 120/240V receptacle has two 120V outlets of different phases and cannot be paralleled.

The Commander 300 has two 15 Amp-120VAC (5-15R) duplex receptacles with GFCI protection and one 50 Amp-120/240 VAC (14-50R) receptacle. The 120/240 VAC receptacle can be split for single-phase 120 VAC operation. The auxiliary power receptacles should only be used with three-wire, grounded type plugs or approved double-insulated tools with two-wire plugs. The current rating of any plug used with the system must be at least equal to the current capacity of the associated receptacle.

STANDBY POWER CONNECTIONS

The Commander 300 is suitable for temporary, standby or emergency power using the engine manufacturer's recommended maintenance schedule.

The Commander 300 can be permanently installed as a standby power unit for 240 volt, three-wire, 44 amp service. Connections must be made by a licensed electrician who can determine how the 120/240 VAC power can be adapted to the particular installation and comply with all applicable electrical codes. The following information can be used as a guide by the electrician for most applications. Refer to the connection diagram shown in ***Figure A.2.***

1. Install the double-pole, double-throw switch between the power company meter and the premises disconnect.

Switch rating must be the same as or greater than the customer's premises disconnect and service over current protection.

2. Take necessary steps to assure the load is limited to the capacity of the Commander 300 by installing a 45 amp, 240 VAC double-pole circuit breaker. Maximum rated load for each leg of the 240 VAC auxiliary is 45 amperes. Loading above the rated output will reduce output voltage below the allowable ±10% of rated voltage, which may damage appliances or other motor-driven equipment and may result in overheating of the Commander 300 engine.
3. Install a 50 amp 120/240 VAC plug (NEMA Type 14-50) to the double-pole circuit breaker using No. 6, 4-conductor cable of the desired length. (The 50 amp, 120/240 VAC plug is available in the optional K802R plug kit.)
4. Plug this cable into the 50 Amp 120/240 Volt receptacle on the Commander 300 case front.

FIGURE A.2 - CONNECTION OF THE COMMANDER TO PREMISES WIRING

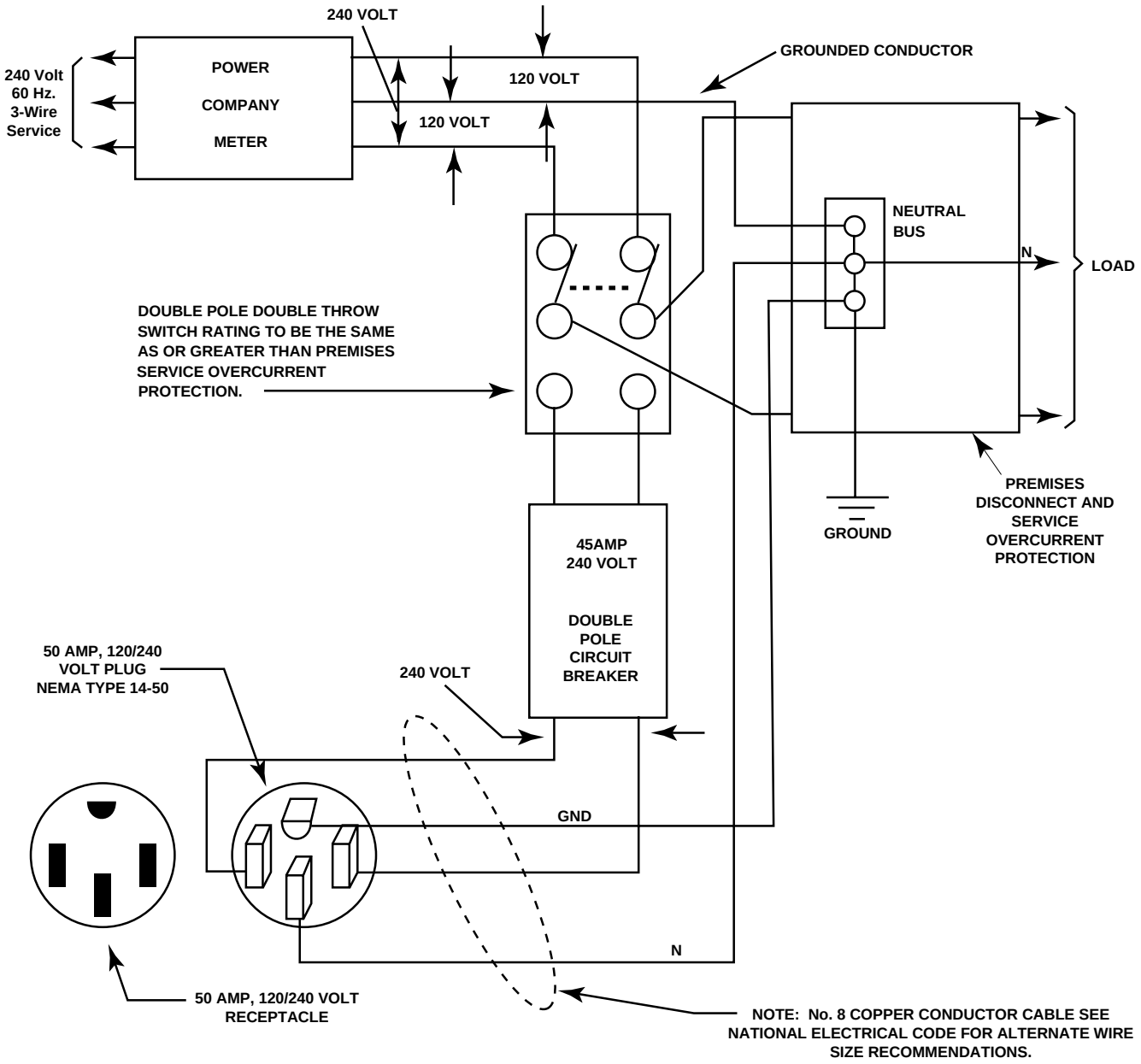

Return to Section TOC
Return to Master TOC

NOTES

A-10

Return to Section TOC
Return to Master TOC
Return to Section TOC
Return to Master TOC
Return to Section TOC
Return to Master TOC
Return to Section TOC
Return to Master TOC

TABLE OF CONTENTS
- OPERATION SECTION -

Operation ..... **Section B**
Operating Instructions B-2
Safety Instructions B-2
General Description B-3
Recommended Applications B-3
Welder B-3
Generator B-3
Design Features B-3
Welding Capability B-4
Controls and Settings B-4
Engine Controls B-5
Welder Controls B-6
Auxiliary Power Controls B-7
Engine Operation B-8
Starting the Engine B-8
Cold Weather Starting B-8
Stopping the Engine B-8
Break-in Period B-8
Typical Fuel Consumption B-9
Welder Operation B-9
Stick Welding B-9
Pipe Welding B-9
Constant Current (CC) Welding B-9
TIG Welding B-9
Wire Feed (Constant Voltage) Welding B-11
Auxiliary Power Operation B-11
Simultaneous Welding and Auxiliary Power Loads B-11

Return to Master TOC
Return to Master TOC
Return to Master TOC
Return to Master TOC

Return to Section TOC
Return to Master TOC
Return to Section TOC
Return to Master TOC
Return to Section TOC
Return to Master TOC
Return to Section TOC
Return to Master TOC

OPERATING INSTRUCTIONS

Read and understand this entire section before operating your Commander 300.

SAFETY INSTRUCTIONS

⚠ WARNING

Do not attempt to use this equipment until you have thoroughly read all the operating and maintenance manuals supplied with your machine. They include important safety precautions; detailed engine starting, operating and maintenance instructions and parts lists.



ELECTRIC SHOCK can kill.

- Do not touch electrically live parts such as output terminals or internal wiring.
- Insulate yourself from the work and ground.
- Always wear dry insulating gloves.



FUMES AND GASES can be dangerous.

- Keep your head out of fumes.
- Use ventilation or exhaust to remove fumes from breathing zone.



WELDING SPARKS can cause fire or explosion.

- Keep flammable material away.
- Do not weld on containers that have held combustibles.



ARC RAYS can burn.

- Wear eye, ear, and body protection.

⚠ WARNING



ENGINE EXHAUST can kill.

- Use in open, well ventilated areas or vent exhaust to the outside.
- Do not stack anything on or near the engine.



MOVING PARTS can injure.

- Do not operate this equipment with any of its doors open or guards off.
- Stop the engine before servicing it.
- Keep away from moving parts.

Only qualified personnel should install, use, or service this equipment.

ADDITIONAL SAFETY PRECAUTIONS

Always operate the welder with the hinged door closed and the side panels in place. These provide maximum protection from moving parts and insure proper cooling air flow.

OPERATION

GENERAL DESCRIPTION

The Commander 300 is a diesel engine-driven welding power source. The machine uses a brush type alternating current generator for DC multi-purpose welding and for 120/240 VAC auxiliary standby power. The welding control system uses state of the art ***Chopper Technology***.

The generator has a single sealed bearing for maintenance-free service. The rotor is a copper wound design with two slip rings and brushes. The stator is wound entirely with heavy gauge copper wire and insulated with NEMA class F insulation material. The stator is then impregnated with three layers of high quality varnish. After the stator is assembled using tie bars, the entire assembly is covered with an environmentally protective coating. These measures insure trouble-free operation in the harshest environments.

The fuel tank is made from high density polyethylene and holds 25 gallons (94.6 liters) of diesel fuel. This will provide enough fuel to run for 18 hours at full load.

The Deutz F3L-1011 F engine is equipped with a standard, heavy duty, combination fuel filter/water separator element.

RECOMMENDED APPLICATIONS

WELDER

The Commander 300 (Stick model) provides excellent constant current DC welding output for stick (SMAW) welding. The Commander 300 (Stick & Wire model) also provides excellent constant voltage DC welding output for MIG (GMAW) and Innershield (FCAW) welding.

GENERATOR

The Commander 300 provides smooth 120/240 VAC output for auxiliary power and emergency standby power.

DESIGN FEATURES

K1585-2 Commander 300 Deluxe Model Features

FOR WELDING:

- Excellent DC multi-purpose welding for stick, MIG, TIG, cored wire and arc gouging applications.
- 30 to 300 amps output in five slope controlled ranges for out-of position and pipe electrodes, one constant current output range for general purpose welding, and one constant voltage range for MIG wire and cored wire welding.
- 100% duty cycle at 300 amps output and 60 % duty cycle at 375 amps output.
- Dual 3-digit output meters are provided (optional on K1585-1) for presetting the weld amperage or voltage and displaying the actual amperage and voltage during welding. The meters use superbrite LEDs for improved readability in full sunlight.
- Standard remote control capability with 14-pin and 6-pin connectors for easy connection of Lincoln remote control accessories.
- An internal “Solid State” contactor allows for the selection of “hot” or “cold” output terminals with a toggle switch on the control panel.
- ”Arc Control” potentiometer in Wire and Stick modes for precise adjustment of arc characteristics.
- Advanced circuitry to prevent pop-outs in the five slope modes.

FOR AUXILIARY POWER

- 10,000 watts of 120/240 VAC, 60Hz auxiliary power.
- Power for tools, 120/240 VAC lights, electric pumps and for standby emergency power.
- Power to drive a 2 HP motor (provided it is started under no load).
- Two 15 amp 120 VAC duplex receptacles with GFCI protection for up to 30 amps of 120 VAC power.
- One 50 amp, 120/240 VAC dual voltage receptacle for up to 44 amps of 240 VAC and up to 44 amps per side to separate branch circuits (not in parallel) of 120 VAC single phase auxiliary power. Allows easy connection to premises wiring.
- Weld and provide AC auxiliary power at the same time (within machine total capacity).

Return to Section TOC
Return to Master TOC

Return to Section TOC
Return to Master TOC

ADDITIONAL DESIGN FEATURES

- Deutz 3-cylinder, air/oil cooled diesel engine. Designed for long life, easy maintenance, and excellent fuel economy.
- Engine protection system shuts the engine down for low oil pressure, high oil temperature, or a broken fan/engine alternator belt.
- Gauges for oil pressure, oil temperature, engine alternator output and fuel level.
- Indicator lights for low oil pressure, high oil temperature, engine alternator low output/broken belt and low fuel level (on K1585-2 only).
- Automatic low fuel shutdown before running out of fuel (K1585-2 only).
- Engine hour meter standard on all models.
- Extended range 25 gallon (94.6 l) fuel tank.
- Automatic idler reduces engine speed when not welding or drawing auxiliary power. This feature reduces fuel consumption and extends engine life.
- Compact size fits crosswise in full size pick-up truck. Single side engine service.
- Copper alternator windings and high temperature insulation for dependability and long life.
- New paint system on case and base for outstanding corrosion protection.

K1585-1 COMMANDER 300 STANDARD MODEL

The K1585-1 is the standard version of the Commander 300, and has all the features of the K1585-2 Deluxe version except that there are no gauges, low fuel light nor dual output meters. This version does have fully functional engine protection for low oil pressure, high oil temperature, and alternator output with associated lights.

A field installed Dual Output Meter and Gauge Kit (K1596-1) is available for the K1585-1 Commander 300. The kit includes dual output meters, oil pressure gauge, oil temperature gage, and alternator ammeter.

WELDING CAPABILITY

The Commander 300 is rated 300 amps, 32 VDC at 100% duty cycle and 375 amps, 34 VDC at 60% duty cycle. The maximum open circuit voltage at 1900 RPM is 87 volts. The weld current is variable from 30 to 375 amps.

CONTROLS AND SETTINGS

The welder/generator controls are located on the case front panel. Diesel engine idler control, start/stop controls, welding output terminals and ground stud are also on the case front. See ***Figure B.1*** and the explanations that follow.

Figure B.1 Case Front Panel Controls

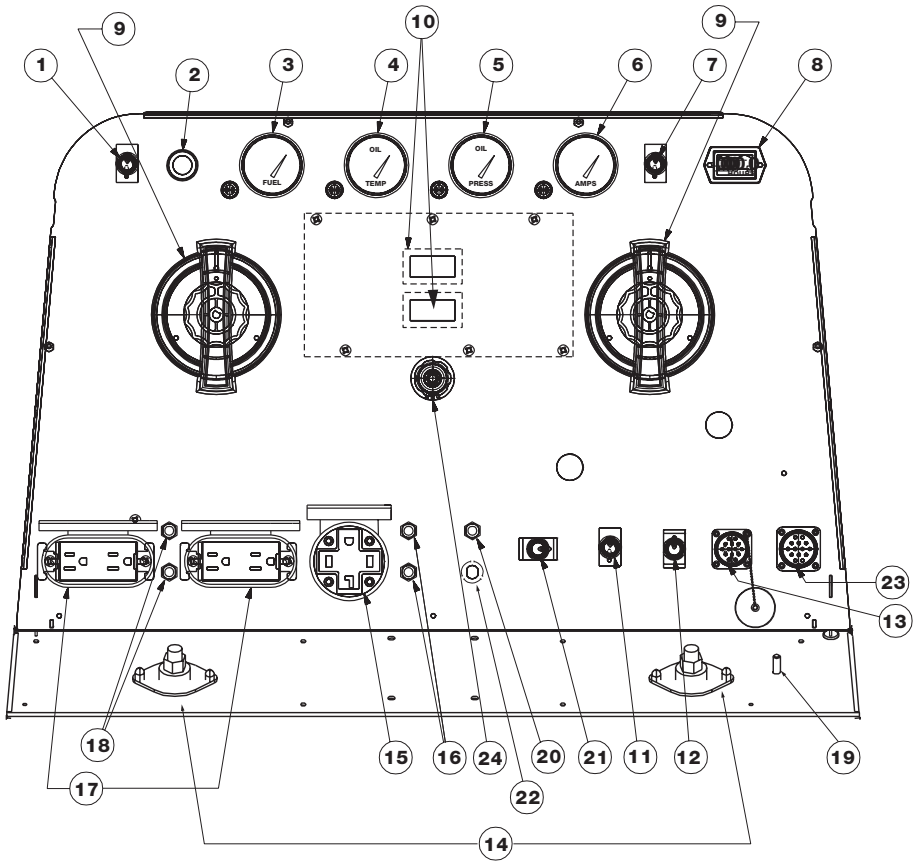

ENGINE CONTROLS (Items 1 through 8)

1. **RUN/STOP SWITCH**: When placed in the “RUN” position, this switch energizes the fuel solenoid and other electric accessories. When placed in the “STOP” position, the flow of fuel to the injection pump is stopped to shut down the engine. (If the switch is left in the “RUN” position and the engine is not running, the fuel solenoid will be engaged for 15 seconds and then shut down. This is to protect the battery from discharge. After 15 seconds, the RUN/STOP switch must be toggled off then on before starting.)
2. **START PUSH BUTTON:** Energizes the starter motor to crank the engine. With the engine “Run / Stop” switch in the “RUN” position, push and hold the START button to crank the engine; release as the engine starts. The START button must be depressed for a minimum of two seconds. Do not press it while engine is running, since this can cause damage to the ring gear and/or starter motor.
3. **FUEL LEVEL GAUGE AND LIGHT (K1585-2 only):** Displays the level of diesel fuel in the 25-gallon fuel tank. The yellow light turns on when the fuel gage reaches the reserve level. Once the reserve level is reached, the engine protection system will shut down the engine after 30 minutes of operation. The machine can be restarted and operated for an additional 30 minutes before the protection system will shut down the engine. This ability to override the engine protection allows the operator to “finish up” if necessary. The operator must watch the fuel level closely to prevent running out of fuel and having to bleed the system.
4. **ENGINE TEMPERATURE GAUGE AND LIGHT (K1585-2 Std., K1585-1 Opt.):** The gauge displays the engine oil temperature. The yellow temperature light remains off under normal operating temperatures. If the light turns on, the engine protection system will shut down the engine. Check for restrictions at the engine cooling air inlets and outlets (consult the engine operator's manual). Check for loose or disconnected leads at the temperature sender located on the engine. Check engine cooling blower belt. Also check to be sure that the welder loads are within the rating of the welder. The light will remain on when the engine has been shut down due to an over temperature condition.

Return to Section TOC
Return to Master TOC

5. **OIL PRESSURE GAUGE AND LIGHT (K1585-2 Std., K1585-1 Opt.):** The gauge displays the engine oil pressure when the engine is running. The yellow oil pressure light remains off with proper oil pressure. If the light turns on, the engine protection system will stop the engine. Check for proper oil level and add oil if necessary. Check for loose or disconnected leads at the oil pressure sender located on the engine. The light will go on and stay on when the RUN/STOP switch is switched to the "RUN" position with engine not running.

6. **ENGINE ALTERNATOR AMMETER AND LIGHT (K1585-2 Std., K1585-1 Opt.):** The yellow engine alternator light is off when battery charging system is functioning normally. If the light turns on, the engine protection system will shut down the engine. Check the engine cooling blower belt. Also, the alternator or the voltage regulator may not be operating correctly. The light may also come on due to a faulty flashing circuit. The light will remain on when the engine has been shut down due to a fault in the alternator, regulator, or the cooling blower belt.

7. **IDLER SWITCH:** The switch has two positions as follows:

   A) In the "HIGH" position, the engine runs at the high idle speed controlled by the governor.

   B) In the "AUTO" position, the idler operates as follows:

      a. When switched from "HIGH" to "AUTO" or after starting the engine, the engine will operate at full speed for approximately 12 seconds and then go to low idle speed.

      b. When the electrode touches the work or power is drawn for lights or tools (approximately 100 watts minimum) the engine accelerates and operates at full speed.

      c. When welding ceases or the AC power load is turned off, a fixed time delay of approximately 12 seconds starts.

      d. If the welding or AC power load is not restarted before the end of the time delay, the idler reduces the engine speed to low idle speed.

      e. The engine will automatically return to high idle speed when the welding load or AC power load is reapplied.

IDLER OPERATIONAL EXCEPTIONS

When the WELDING TERMINALS switch is in the "WELDING TERMINALS REMOTELY CONTROLLED" position the idler will operate as follows:

   a. When the triggering device (Amptrol, Arc Start Switch, etc.) is pressed, the engine will accelerate and operate at full speed provided a welding load is applied within approximately 12 seconds.

   b. If the triggering device remains pressed but no welding load is applied within approximately 12 seconds, the engine will return to low idle speed.

   c. If the triggering device is released or welding ceases, the engine will return to low idle speed after approximately 12 seconds.

8. **HOUR METER:** The hour meter displays the total time that the engine has been running. This meter is a useful indicator for scheduling preventative maintenance.

WELDER CONTROLS (Items 9 through 14)

9. **OUTPUT RANGE SELECTOR SWITCH & OUTPUT CONTROL:** These two controls allow you to select between various welding output slopes and adjust the desired welding output. Refer to Table B.1 for a description of how these two controls work.

TABLE B.1 OUTPUT RANGE SWITCH AND OUTPUT CONTROL FUNCTIONS

	OUTPUT RANGE SELECTOR SWITCH [1]	OUTPUT CONTROL [2]
Sloped Output for Pipe Welding	5 Range Settings 60, 90, 150, 230, 300 (Max. current on each adjustment of setting	Provides a fine adjustment of welding current from Min (1) to Max (10) within each range
Constant Current Fabrication and General Purpose Welding (This setting also used for TIG.)	1 Range setting 30-375 Amps	
Constant Voltage Output for MIG Wire or CORED WIRE Welding	1 Range setting 12 to 40 Volts	Provides Fine Voltage Adjustment

[1] If the SELECTOR switch is positioned between settings the previous setting is maintained until the switch is properly positioned on a setting.

[2] CONTROL also controls O.C.V. while in the 5 sloped output ranges.

Return to Section TOC
Return to Master TOC

10. **DIGITAL OUTPUT METER:** The digital output meters are located in the center of the control panel between the two large control knobs. The meters allow the output current level to be set prior to welding in stick mode and voltage level to be set prior to welding in the wire modes. During the welding process the meters display the actual output current and voltage, within +1%, -10% accuracy.

11. **WELDING TERMINALS SWITCH:** The toggle switch on the control panel labeled "WELDING TERMINALS ALWAYS ON" and "WELDING TERMINALS REMOTELY CONTROLLED" is used to control the operation of the "solid state contactor" which allows for the selection of "Hot" or "Cold" welding terminals.

    With the switch in the "WELDING TERMINALS ALWAYS ON" position, the contactor is closed and the welding terminals are always "Hot."

    With the switch in the "WELDING TERMINALS REMOTELY CONTROLLED" position, the contactor operation is controlled by an Amptrol, Arc Start Switch or some other type of triggering device through the use of a control cable connected to the 6-pin or 14-pin MS connector.

    When the triggering device is pressed the contactor is closed and the welding terminals are "Hot."

    When the triggering device is released the contactor is opened and the welding terminals are "Cold."

12. **LOCAL/REMOTE SWITCH:** The toggle switch on the control panel labeled "LOCAL/REMOTE" gives the operator the option of controlling the output at the welder control panel or at a remote station. For remote control, the toggle switch is set in the "REMOTE" position. For control at the welder control panel, the toggle switch is set in the "LOCAL" position.

13. **6 - PIN CONNECTOR:** The 6-pin connector located on the control panel allows for connection of interfacing equipment.

14. **WELD OUTPUT TERMINALS + AND – :** These 1/2 - 13 studs with flange nuts provide welding connection points for the electrode and work cables. For positive polarity welding, the electrode cable connects to the "+" terminal and the work cable connects to this "-" terminal. For negative polarity welding, the work cable connects to the "+" terminal and the electrode cable connects to this "-" terminal.

AUXILIARY POWER CONTROLS (Items 15 through 19)

15. **120/240VAC RECEPTACLE:** This is a 120/240VAC (14-50R) receptacle that provides 240VAC or can be split for 120VAC single-phase auxiliary power. This receptacle has a 50-amp rating. Refer to ***AUXILIARY POWER RECEPTACLES*** in the Installation section for further information about this receptacle. Also refer to ***AUXILIARY POWER OPERATION*** later in this section.

16. **50 AMP CIRCUIT BREAKERS:** These circuit breakers provide separate overload current protection for each 120V circuit at the 240V receptacle.

17. **120VAC RECEPTACLES:** These two 120VAC (5-15R) receptacles with GFCI protection provide 120VAC for auxiliary power. These receptacles have a 20 amp total rating. Refer to ***AUXILIARY POWER RECEPTACLES*** in the Installation section for further information about these receptacles. Also refer to ***AUXILIARY POWER OPERATION*** later in this section.

18. **15 AMP CIRCUIT BREAKERS:** These circuit breakers provide separate overload current protection for each 120VAC receptacle.

19. **GROUND STUD:** Provides a connection point for connecting the machine case to earth ground for the safest grounding procedure. Refer to ***MACHINE GROUNDING*** in the Installation section for proper machine grounding information.

20. **15 AMP CIRCUIT BREAKER:** This circuit breaker provides overload protection for the 120 VAC circuit in the 14-pin connector.

21. **VOLTMETER +/- SWITCH:** Changes the polarity display on the wire feeder.

22. **15 AMP CIRCUIT BREAKER:** This circuit breaker provides overload protection for the 42 VAC circuit in the 14-pin connector.

23. **14-PIN CONNECTOR:** For quick connection of interfacing equipment.

24. **ARC CONTROL:** The "ARC CONTROL" potentiometer is active in two modes: "STICK/TIG" and "WIRE WELDING" with different purposes in each mode.

"STICK/TIG" mode: In this mode, the "ARC CONTROL" knob sets the short circuit current during stick welding. Increasing the number from 1 to 10 increases the short circuit current. This prevents sticking of the electrode to the plate at low welding current settings. This also increases spatter. It is recommended that the control be set to the minimum number without electrode sticking.

Return to Section TOC
Return to Master TOC

Return to Section TOC
Return to Master TOC

"WIRE WELDING" mode: In this mode increasing the number from 1 to 10 changes the arc from soft and washed-in to crisp and narrow. It acts as an inductance control. The proper setting depends on the application and operator preference.

In general, MIG welding performs best in the "SOFT" range and Innershield in the "CRISP" range.

ENGINE OPERATION

⚠ WARNING

DO NOT RUN THE ENGINE AT EXCESSIVE SPEEDS. The maximum allowable high idle speed for the Commander 300 is 1900 RPM, no load. Do NOT increase the idle speed on the engine. Severe personal injury and damage to the machine can result if it is operated at speeds above the maximum rated speed.

Read and understand all safety instructions included in the Deutz engine instruction manual that is shipped with your Commander 300.

STARTING THE ENGINE

1. Open the engine compartment door and check that the fuel shutoff valve located to the left of the fuel filter housing is in the open position. (The lever should be in line with the hose.)
2. Check for proper oil level on the oil dipstick. Close the engine compartment door.
3. Remove all plugs connected to the AC power receptacles.
4. Set IDLER switch to "AUTO."
5. Set the RUN/STOP switch to "RUN." Observe that all engine protection lights momentarily turn on. Some lights may turn off before starting. Check the fuel gauge (K1585-2 only) to make sure that there is an adequate fuel level.
6. Press and hold the engine START button for a minimum of 2 seconds.
7. Release the engine START button when the engine starts.
8. Check that the indicator lights are off. If the LOW FUEL light is on (K1585 2 only), the engine will shut down 30 minutes after starting. If any other indicator light is on after starting, the engine will shut down in a few seconds. Investigate any indicated problem.
9. Allow the engine to warm up at low idle speed for several minutes before applying a load and/or switching to high idle. Allow a longer warm up time in cold weather.

COLD WEATHER STARTING

With a fully charged battery and the proper weight oil, the engine should start satisfactorily even down to about 0°F. With the above and the optional ether starter kit (K887-1), the engine should start satisfactorily down to about -20°F. With the above and an oil pan preheating system,* the engine should start satisfactorily down to about -30°F. With the above and a battery warmer,* the engine should start satisfactorily down to about -40°F.

* Contact your local Lincoln Electric Representative for suggested after-market kits.

STOPPING THE ENGINE

Switch the RUN/STOP switch to "STOP." This turns off the voltage supplied to the shutdown solenoid. A backup shutdown can be accomplished by shutting off the fuel valve located in the fuel line.

BREAK-IN PERIOD

The engine used to supply power for your welder is a heavy duty, industrial engine. It is designed and built for rugged use. It is very normal for any engine to use small quantities of oil until the break-in is accomplished. Check the oil level twice a day during the break-in period (about 200 running hours).

⚠ CAUTION

During break-in, subject the Commander 300 to heavy loads. Avoid long periods running at idle. Before stopping the engine, remove all loads and allow the engine to cool several minutes.

The heavy loading of the engine during break-in, within the rating of the machine, is recommended to properly seat the piston rings and prevent wetstacking. Wetstacking is an accumulation of unburned fuel and/or lubricant in the form of a wet, black, tar-like substance in the exhaust pipe. The rings are seated and the break-in period is complete when there are no longer any signs of wetstacking, which should occur within the first 50 to 100 hours of operation.

Return to Section TOC
Return to Master TOC
Return to Section TOC
Return to Master TOC
Return to Section TOC
Return to Master TOC
Return to Section TOC
Return to Master TOC

⚠ CAUTION

Using your welder at low amperages with long idle running periods during the break-in period may result in a glaze forming on the engine cylinder walls and the rings not seating properly. No amount of loading will properly seat the piston rings after they are glazed over.

TYPICAL FUEL CONSUMPTION

Refer to Table B.2 for typical fuel consumption of the Commander 300 engine for various operating scenarios.

Table B.2 Deutz F3L 912 Engine Fuel Consumption

	Deutz F3L 1011 29 HP @ 1800 RPM	Running Time for 25 gallons (Hours)
Low Idle - No Load 1400 RPM	.27 gallons/hour (1.02 liters/hour)	92.5
High Idle - No Load 1900 RPM	.48 gallons/hour (1.81 liters/hour)	52
DC CC Weld Output 300 Amps @ 32 Volts	1.34 gallons/hour (5.07 liters/hour)	18.6
Auxiliary Power 10,000 VA	1.32 gallons/hour (5.00 liters/hour)	18.9

WELDER OPERATION

STICK WELDING

The Commander 300 can be used with a broad range of DC stick electrodes.

The SELECTOR switch provides five overlapping slope controlled current ranges. The CONTROL adjusts the current from minimum to maximum within each range. Voltage is also controlled by the CONTROL in the slope controlled setting. These slope-controlled settings are intended for “out-of-position” welding, including pipe welding, where the operator would like to control the current level by changing the arc length.

PIPE WELDING

The Commander 300 is equipped with special circuitry to minimize pop-outs in the five slope modes at any open circuit voltage.

For a soft arc characteristic, set the “SELECTOR” Switch to the lowest setting that still provides the current you need and set the “CONTROL” near maximum. For example: to obtain 140 amps and a soft arc, set the “SELECTOR” Switch to the “150 MAX” position and then adjust the “CONTROL” for 140 amps.

When a forceful “digging” arc is required, use a higher setting and lower the open circuit voltage. For example: to obtain 140 amps and a forceful arc, set the “SELECTOR” to the “230 MAX” position and then adjust the “CONTROL” to get 140 amps.

CONSTANT CURRENT (CC) WELDING

The most clockwise position of the “SELECTOR” switch is designed for horizontal welds with all types of electrodes, but especially low hydrogen. The “CONTROL” adjusts the full range of 30 to 375 amps. This setting provides a soft, constant current arc. If a more forceful arc is desired, then select the proper range from the slope controlled current ranges.

In the CC mode, sticking can be prevented by adjusting the “ARC CONTROL.” Turning this control clockwise increases the short circuit current, thus preventing sticking. This is another way of increasing arc force.

TIG WELDING

The Commander 300 can be used in a wide variety of DC Tungsten Inert Gas (TIG) welding applications. When used with the K930-1 or -2 TIG module or K799 Hi-Freq Unit, ratings are limited to 375 amps at 20% duty cycle, 300 amps at 60% duty cycle, and 250 amps at 80% duty cycle.

Table B.3 TYPICAL CURRENT RANGES[1] FOR TUNGSTEN ELECTRODES[2]

Tungsten Electrode Diameter in. (mm)	DCEN (-)	DCEP (+)	Approximate Argon Gas Flow Rate C.F.H. (l/min.)		TIG TORCH Nozzle Size [4 5]
	1%, 2% Thoriated Tungsten	1%, 2% Thoriated Tungsten	Aluminum	Stainless Steel	
0 .010 (.25)	2-15	[3]	3-8 (2-4)	3-8 (2-4)	#4, #5, #6
0.020 (.50)	5-20	[3]	5-10 (3-5)	5-10 (3-5)	
0.040 (1.0)	15-80	[3]	5-10 (3-5)	5-10 (3-5)	
1/16 (1.6)	70-150	10-20	5-10 (3-5)	9-13 (4-6)	#5, #6
3/32 (2.4)	150-250	15-30	13-17 (6-8)	11-15 (5-7)	#6, #7, #8
1/8 (3.2)	250-400	25-40	15-23 (7-11)	11-15 (5-7)	
5/32 (4.0)	400-500	40-55	21-25 (10-12)	13-17 (6-8)	#8, #10
3/16 (4.8)	500-750	55-80	23-27 (11-13)	18-22 (8-10)	
1/4 (6.4)	750-1000	180-125	28-32 (13-15)	23-27 (11-13)	

[1] When used with argon gas. The current ranges shown must be reduced when using argon/helium or pure helium shielding gases.

[2] Tungsten electrodes are classified as follows by the American Welding Society (AWS):

Pure	EWP
1% Thoriated	EWTh-1
2% Thoriated	EWTh-2

Though not yet recognized by the AWS, Ceriated Tungsten is now widely accepted as a substitute for 2% Thoriated Tungsten in AC and DC applications.

[3] DCEP is not commonly used in these sizes.

[4] TIG torch nozzle "sizes" are in multiples of 1/16ths of an inch:

# 4 = 1/4 in.	(6 mm)
# 5 = 5/16 in.	(8 mm)
# 6 = 3/8 in.	(10 mm)
# 7 = 7/16 in.	(11 mm)
# 8 = 1/2 in.	(12.5 mm)
#10 = 5/8 in.	(16 mm)

[5] TIG torch nozzles are typically made from alumina ceramic. Special applications may require lava nozzles, which are less prone to breakage, but cannot withstand high temperatures and high duty cycles.

COMMANDER 300 SETTINGS WHEN USING THE K799 HL-FREQ UNIT

a. Set the SELECTOR switch to the "30-375" setting (STICK/TIG).

b. Set the IDLER switch to the "HIGH" position.

c. Set the LOCAL/REMOTE switch to the "REMOTE" position.

d. Set the WELDING TERMINALS switch to the "WELDING TERMINALS ALWAYS ON" position. This will close the solid state contactor and provide an always "hot" electrode.

(Note: This is necessary because the K799 circuitry with respect to the #2 and #4 leads does not provide the proper signal to open and close the solid state contactor in the Commander 300).

COMMANDER 300 SETTINGS WHEN USING THE K930-1 TIG MODULE

a. Set the SELECTOR switch to the 30-375 Setting (STICK/TiG).

b. Set the IDLER switch to the "AUTO" position.

c. Set the LOCAL/REMOTE switch to the "REMOTE" position.

d. Set the WELDING TERMINALS switch to the "WELDING TERMINALS REMOTELY CONTROLLED" position. This will keep the solid state contactor open and provide a "cold" electrode until the triggering device (Amptrol or Arc Start Switch) is pressed.

Return to Section TOC
Return to Master TOC

Return to Section TOC
Return to Master TOC

WIRE FEED (CONSTANT VOLTAGE) WELDING

Connect a wire feeder to the Commander 300 and set welder controls according to the instructions listed earlier in this section.

The Commander 300 in the "WIRE WELDING" position, permits it to be used with a broad range of flux cored wire (Innershield and Outershield) electrodes and solid wires for MIG welding (gas metal arc welding). Welding can be finely tuned using the "ARC CONTROL."

Some recommended Innershield electrodes are NR-311, NS-3M, NR-207, NR-203 Ni 1%, NR-204-H.

Recommended Outershield electrodes are 0S-70, 0S71M.

Some recommended solid wires for MIG welding are.035 (0.9 mm), .045 (1.1 mm) and .052 (1.3 mm), L-50 and L56, .035 (0.9 mm) and .045 (1.1 mm) Blue Max MIG 308 LS.

For any electrodes, including the above recommendations, the procedures should be kept within the rating of the machine. For additional electrode information, see Lincoln publications N-675, GS-100 and GS-210.

AUXILIARY POWER OPERATION

Start the engine and set the IDLER control switch to the desired operating mode. Full power is available regardless of the welding control settings, if no welding current is being drawn.

The auxiliary power of the Commander 300 consists of two 15 Amp-120 VAC (5-15R) duplex receptacles and one 50 Amp-120/240 VAC (14-50R) receptacle. The 120/240VAC receptacle can be split for single-phase 120 VAC operation.

The auxiliary power capacity is 10,000 watts of 60 Hz, single-phase power. The auxiliary power capacity rating in watts is equivalent to volt-amperes at unity power factor. The maximum permissible current of the 240 VAC output is 44 A. The 240 VAC output can be split to provide two separate 120 VAC outputs with a maximum permissible current of 44 A per output to two separate 120 VAC branch circuits. Output voltage is within + 10% at all loads up to rated capacity.

NOTE: The 120/240V receptacle has two 120V outputs of different phases and cannot be paralleled.

The auxiliary power receptacles should only be used with three-wire, grounded type plugs or approved double-insulated tools with two-wire plugs.

The current rating of any plug used with the system must be at least equal to the current capacity of the associated receptacle.

SIMULTANEOUS WELDING AND AUXILIARY POWER LOADS

It must be noted that the above auxiliary power ratings are with no welding load. Simultaneous welding and power loads are specified in table B.4. The permissible currents shown assume that current is being drawn from either the 120 VAC or 240 VAC supply (not both at the same time).

TABLE B.4 Commander 300 Simultaneous Welding and Power Loads

Welding Output Range Setting	Welding Output	Permissible Power - Watts (Unity Power Factor)	Permissible Auxiliary Current in Amperes	
			@120 V ±10% *	@ 240 V ±10%
30-375	300A/32V	400	3.3	1.6
300	300A/32V	400	3.3	1.6
230	230A/30V	3100	26*	13
150	150A/29V	5650	47**	23.5
90	90A27V	7600	63**	31.5
60	60A/25V	8500	70**	35

* Each duplex receptacle is limited to 15 amps.
** Not to exceed 44 amps per 120VAC branch circuit when splitting the 240VAC output.

NOTES

B-12

Return to Section TOC
Return to Master TOC
Return to Section TOC
Return to Master TOC
Return to Section TOC
Return to Master TOC
Return to Section TOC
Return to Master TOC

TABLE OF CONTENTS
- ACCESSORIES -

Accessories.....**Section C**
Options/Accessories C-2
Field Installed Options C-2
Stick Welding Accessories.....C-2
TIG Welding Accessories C-2
Semiautomatic Welding Accessories.....C-3
Connection of Lincoln Electric Wire Feeders C-3
Connection of the LN-7 .....C-4
Connection of the LN-7 Using the K584 or K594 Input Cable Assembly C-5
Connection of the LN-8 Using the K867 Universal Adapter C-6
Connection of the LN-8 Using the K595 Input Cable Assembly C-7
Connection of the LN-23-P C-8
Connection of the LN-25 .....C-9

Return to Master TOC
Return to Master TOC
Return to Master TOC
Return to Master TOC

Return to Section TOC
Return to Master TOC

OPTIONS/ACCESSORIES

The following options/accessories are available for your Commander 300 from your local Lincoln Distributor.

FIELD INSTALLED OPTIONS

K802R POWER PLUG KIT - Provides a plug for each receptacle.

K857 25 ft. (8.5 m) or K857-1 100 ft. (30.4 m) REMOTE CONTROL - Portable control provides same dial range as the output control on the welder from a location up to the specified length from the welder. Has convenient plug for easy connection to the welder. The Commander 300 is equipped with a 6-pin connector for connecting the remote control and a toggle switch for selecting “LOCAL” output control or “REMOTE” output control.

K704 ACCESSORY SET - Includes 35 feet (10 m) of electrode cable and 30 feet (9 m) of work cable, headshield, work clamp and electrode holder. Cable is rated at 500 amps, 60% duty cycle.

K953-1 TWO-WHEEL TRAILER - For road, in-plant and yard towing. Road towing with optional fender and light kit. (For highway use, consult applicable federal, state and local laws regarding possible additional requirements.)

- K953-1 Trailer
- K958-1 Ball Hitch
- K958-2 Lunette Eye Hitch
- K959-1 Fender & Light Kit
- K965-1 Cable Storage Rack

K887-1 ETHER START KIT - Provides maximum cold weather starting assistance for frequent starting below 10(F (-12.2(C). Required Ether tank is not provided with kit.

K1604-1 OIL DRAIN KIT - Includes ball valve, hose and clamp.

K1690-1 (2 DUPLEXES) GFCI KIt - Includes a UL approved 115 volt ground fault circuit interrupter receptacle (duplex type) with covers and installation instructions. Each half of the receptacle is rated 15 amps, but the maximum total current from the GFCI duplex is limited to 20 amps. The GFCI receptacle replaces the factory installed 115 volt duplex receptacle.

S24647 SPARK ARRESTER

K1596-1 DUAL OUTPUT METERS AND GAUGES - Dual output meters provide preset ability of voltage for wire welding and current for stick welding. Measures both current and voltage when welding. Gauges include battery ammeter, engine temperature, and engine oil pressure. Fuel gauge is not available in kit form.

K1597-1 42 VAC TRANSFORMER KIT - For products requiring 42 VAC power source.

STICK WELDING ACCESSORIES

K704 Accessory Kit, which includes:

- Electrode holder and cable.
- Ground clamp and cable.
- Headshield.

TIG WELDING ACCESSORIES

- Magnum TIG Torch
- Magnum Parts Kit and Argon gas
- K930-ALL TIG Module (not required for scratch-start DC TIG welding)
- K936-1 Control Cable
- K870 Foot Amptrol

Also available:

- K963-1/-2 Hand Amptrol
- K814 Arc Start Switch
- K937-22 Control Cable Extension
- K937-45 Control Cable Extension
- K844-1 Water Valve

ACCESSORIES

SEMIAUTOMATIC WELDING ACCESSORIES

LN-7 OR LN-8 WIRE FEEDERS - Semiautomatic, constant speed wire feeders. For CV operation only.

LN-23P WIRE FEEDER - This portable wire feeder is capable of CV operation. K350-1 Adapter Kit is required.

LN-25 WIRE FEEDER - The LN-25 with or without an external contactor may be used with the Commander 300.

NOTE: Gas-shielded welding requires a Magnum Gun. Gasless welding requires an Innershield Gun.

OTHER WIRE FEEDERS FOR THE COMMANDER 300

- NA-3 Automatic Wire Feeder
- LN-142 Semiautomatic Wire Feeder(requires optional K1597-1 42VAC Transformer Kit).

HIGH FREQUENCY GENERATORS FOR TIG APPLICATIONS

The K799 Hi-Freq Unit and the K930-ALL TIG Modules are suitable for use with the Commander 300. The Commander 300 is equipped with the required RF bypass circuitry for the connection of high frequency generating equipment. The high frequency bypass network supplied with the K799 Hi-Freq Unit does NOT need to be installed into the Commander 300.

The Commander 300 and any high frequency-generating equipment must be properly grounded. See the K799 Hi-Freq Unit and the K930-AII TIG Module operating manuals for complete instructions on installation, operation, and maintenance.

CONNECTION OF LINCOLN ELECTRIC WIRE FEEDERS

⚠ WARNING

ELECTRIC SHOCK can kill.



- **Do not operate with panels open.**
- **Disconnect NEGATIVE (-) BATTERY LEAD before servicing.**
- **Do not touch electrically live parts.**

MOVING PARTS can injure.



- **Keep guards in place.**
- **Keep away from moving parts.**
- **Only qualified personnel should install, use or service this equipment.**

Return to Section TOC
Return to Master TOC

CONNECTION OF THE LN-7 TO THE COMMANDER 300 USING K867 UNIVERSAL ADAPTER (SEE FIGURE C.1.)

1. Shut the welder off.
2. Connect the electrode cable from the LN-7 to the "+" terminal of the welder. Connect the work cable to the "-" terminal of the welder.

NOTE: Welding cable must be sized for current and duty cycle of application.

NOTE: Figure C.1 shows the electrode connected for positive polarity. To change polarity, shut the welder off and reverse the electrode and work cables at the Commander 300 output terminals.

3. Connect the K867 Universal Adapter to the K291 or K404 input cable and the 14-pin amphenol of the Commander 300 as indicated in Figure C.1. Make the proper connections for local or remote control according to Figure C.1.
4. Connect the K291 or K404 input cable to the LN-7.
5. Place the IDLER switch in the "HIGH" position.

⚠ CAUTION

Any increase of the high idle engine RPM by changing the governor setting or overriding the throttle linkage will cause an increase in the AC auxiliary voltage. If this voltage goes over 140 volts, wire feeder control circuits may be damaged. The engine governor setting is preset at the factory—do not adjust above RPM specifications listed in this manual.

6. Set the LOCAL/REMOTE switch to "REMOTE" if a K775 remote control is used. Set the switch to "LOCAL" if no remote control is used.
7. Set the VOLTMETER switch to "+" or "-" depending on the polarity chosen.
8. Set the OUTPUT RANGE switch to "WIRE WELDING CV."
9. Set the WELDING TERMINALS switch to "WELDING TERMINAL REMOTELY CONTROLLED."
10. Adjust wire feed speed at the LN-7.
11. Adjust the ARC CONTROL to the desired level ("soft" or "crisp").

FIGURE C.1
COMMANDER 300/LN-7 WITH K867 ADAPTER CONNECTION DIAGRAM

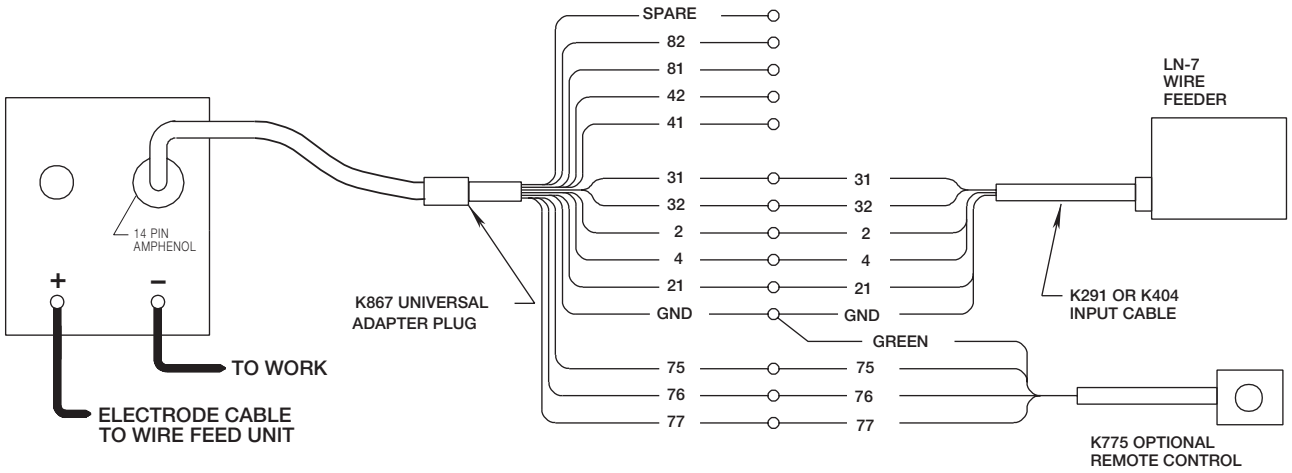

Return to Section TOC
Return to Master TOC

Return to Section TOC
Return to Master TOC

CONNECTION OF THE LN-7 TO THE COMMANDER 300 USING K584 OR K594 INPUT CABLE ASSEMBLY (SEE FIGURE C.2.)

1. Shut the welder off.
2. Connect the electrode cable from the LN-7 to the "+" terminal of the welder. Connect the work cable to the "-" terminal of the welder.

NOTE: Welding cable must be sized for current and duty cycle of application.

NOTE: Figure C.2 shows the electrode connected for positive polarity. To change polarity, shut the welder off and reverse the electrode and work cables at the Commander 300 output terminals.

3. Connect the K584-XX or K594-XX Input Cable Assembly to the LN-7.
4. Connect the K584-XX or 594-XX input cable assembly to the 14-pin amphenol on the Commander 300.
5. Place the IDLER switch in the "HIGH" position.
6. Set the LOCAL/REMOTE switch to "REMOTE" if a K857 or K857-1 remote control is used. Set the switch to "LOCAL" if no remote control is used.

⚠ CAUTION

Any increase of the high idle engine RPM by changing the governor setting or overriding the throttle linkage will cause an increase in the AC auxiliary voltage. If this voltage goes over 140 volts, wire feeder control circuits may be damaged. The engine governor setting is preset at the factory—do not adjust above RPM specifications listed in this manual.

7. Set the VOLTMETER switch to "+" or "-" depending on the polarity chosen.
8. Set the OUTPUT RANGE switch to "WIRE WELDING CV."
9. Set the WELDING TERMINALS switch to "WELDING TERMINALS REMOTELY CONTROLLED."
10. Adjust wire feed speed at the LN-7.
11. Adjust the ARC CONTROL to the desired level ("soft" or "crisp").

NOTE: For remote control, a K857 or K857-1 remote control is required. Connect it to the 6-pin amphenol.

FIGURE C.2
COMMANDER 300/LN-7 WITH K584 OR K594 INPUT CABLE ASSEMBLY CONNECTION DIAGRAM

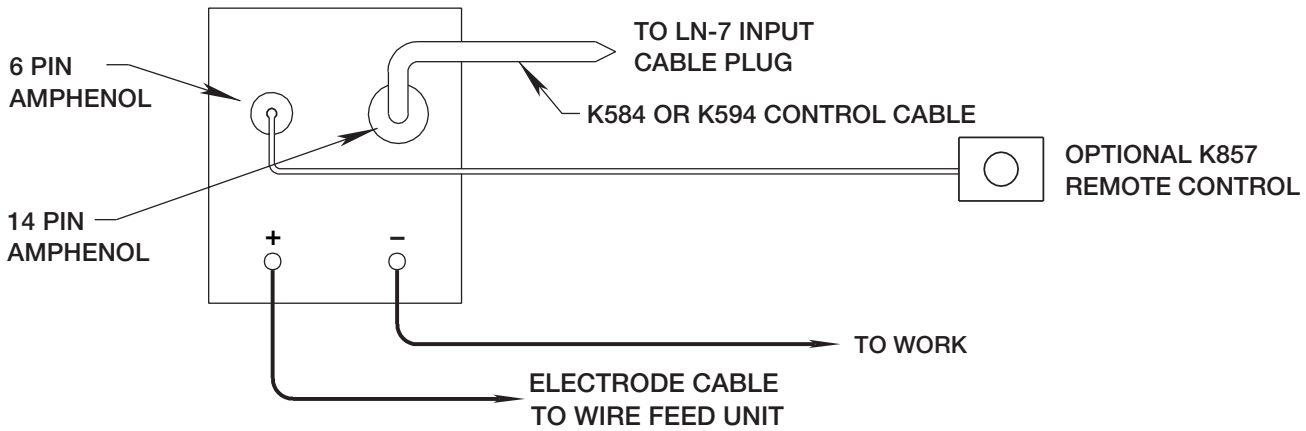

CONNECTION OF THE LN-8 TO THE COMMANDER 300 USING K867 UNIVERSAL ADAPTER (SEE FIGURE C.3.)

1. Shut the welder off.
2. Connect the electrode cable from the LN-8 to the "+" terminal of the welder. Connect the work cable to the "CV- Wire" terminal of the welder.

NOTE: Welding cable must be sized for current and duty cycle of application.

NOTE: Figure C.3 shows the electrode connected for positive polarity. To change polarity, shut the welder off and reverse the electrode and work cables at the Commander 300 output terminals.

3. Connect the K867 Universal Adapter to the K196 input cable and the 14-pin amphenol of the Commander 300 as indicated in Figure C.3. Make the proper connections for local or remote control according to Figure C.3.
4. Connect the K196 input cable to the LN-8.
5. Place the IDLER switch in the "HIGH" position.

⚠ CAUTION

Any increase of the high idle engine RPM by changing the governor setting or overriding the throttle linkage will cause an increase in the AC auxiliary voltage. If this voltage goes over 140 volts, wire feeder control circuits may be damaged. The engine governor setting is preset at the factory—do not adjust above RPM specifications listed in this manual.

6. Set the LOCAL/REMOTE switch to "REMOTE."
7. Set the VOLTMETER switch to "+" or "-" depending on the polarity chosen.
8. Set the OUTPUT RANGE switch to "WIRE WELDING CV."
9. Set the WELDING TERMINALS switch to "WELDING TERMINALS REMOTELY CONTROLLED."
10. Adjust wire feed speed and voltage at the LN-8.
11. Adjust the ARC CONTROL to the desired level ("soft" or "crisp").

FIGURE C.3
COMMANDER 300/LN-8 WITH K867 ADAPTER CONNECTION DIAGRAM

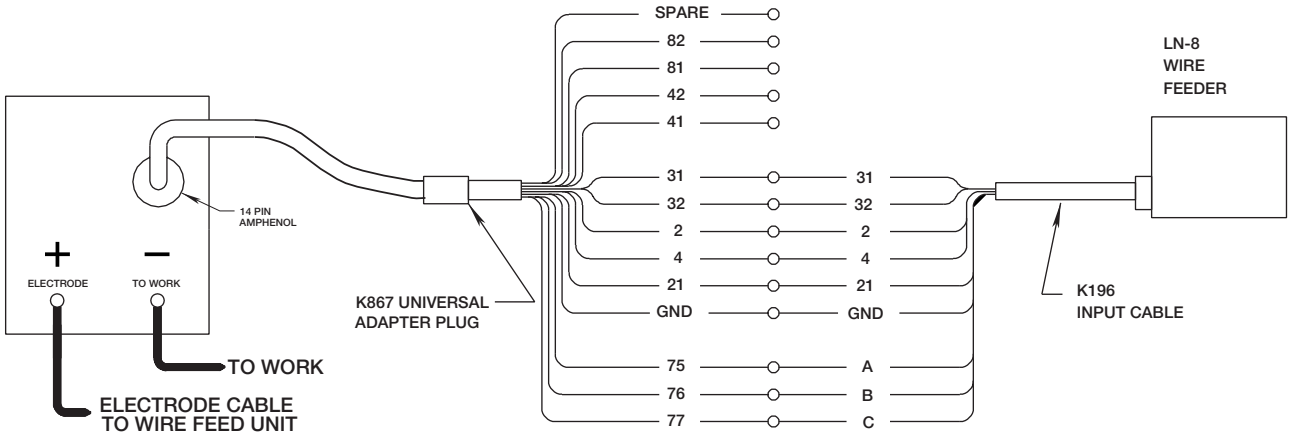

Return to Section TOC
Return to Master TOC

CONNECTION OF THE LN-8 TO THE COMMANDER 300 USING K595 INPUT CABLE ASSEMBLY (SEE FIGURE C.4.)

1. Shut the welder off.
2. Connect the electrode cable from the LN-8 to the "+" terminal of the welder. Connect the work cable to the "-" terminal of the welder.

NOTE: Welding cable must be sized for current and duty cycle of application.

NOTE: Figure C.4 shows the electrode connected for positive polarity. To change polarity, shut the welder off and reverse the electrode and work cables at the Commander 300 output terminals.

3. Connect the K595-XX Input Cable Assembly to the LN-8.
4. Connect the K595-XX to the 14-pin amphenol on the Commander 300.
5. Place the IDLER switch in the "HIGH" position.

⚠ CAUTION

Any increase of the high idle engine RPM by changing the governor setting or overriding the throttle linkage will cause an increase in the AC auxiliary voltage. If this voltage goes over 140 volts, wire feeder control circuits may be damaged. The engine governor set ting is preset at the factory—do not adjust above RPM specifications listed in this manual.

6. Set the LOCAL/REMOTE switch to "REMOTE."
7. Set the VOLTMETER switch to "+" or "-" depending on the polarity chosen.
8. Set the OUTPUT RANGE switch to "WIRE WELDING CV."
9. Set the WELDING TERMINALS switch to "WELDING TERMINALS REMOTELY CONTROLLED."
10. Adjust wire feed speed and voltage at the LN-8.
11. Adjust the ARC CONTROL to the desired level ("soft" or "crisp").

FIGURE C.4
COMMANDER 300/LN-8 WITH K595 INPUT CABLE ASSEMBLY CONNECTION DIAGRAM

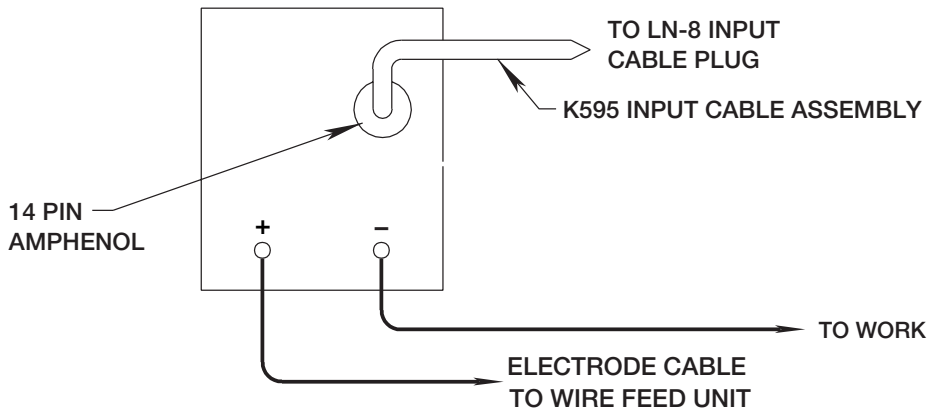

Return to Section TOC
Return to Master TOC

CONNECTION OF THE LN-23P TO THE COMMANDER 300 USING K350-1 ADAPTER (SEE FIGURE C.5.)

1. Shut the welder off.
2. Connect the electrode cable from the LN-23P to the "-" terminal of the welder. Connect the work cable to the "+" terminal of the welder.

NOTE: Welding cable must be sized for current and duty cycle of application.

NOTE: Figure C.5 shows the electrode connected for negative polarity.

3. Connect the K350-1 adapter to the amphenol on the LN-23P and the 14-pin amphenol of the Commander 300 as indicated in Figure C.5.
4. Place the IDLER switch in the "HIGH" position.

⚠ CAUTION

Any increase of the high idle engine RPM by changing the governor setting or overriding the throttle linkage will cause an increase in the AC auxiliary voltage. If this voltage goes over 140 volts, wire feeder control circuits may be damaged. The engine governor set ting is preset at the factory—do not adjust above RPM specifications listed in this manual.

5. Set the VOLTMETER switch to negative.
6. Set the OUTPUT RANGE switch to "WIRE WELDING CV."
7. Set the WELDING TERMINALS switch to "WELDING TERMINALS REMOTELY CONTROLLED."
8. Set the LOCAL/REMOTE switch according to whether you are controlling the welder at the machine or remotely.
9. Adjust wire feed speed and voltage at the LN-23P.

FIGURE C.5
COMMANDER 300/LN-23P CONNECTION DIAGRAM

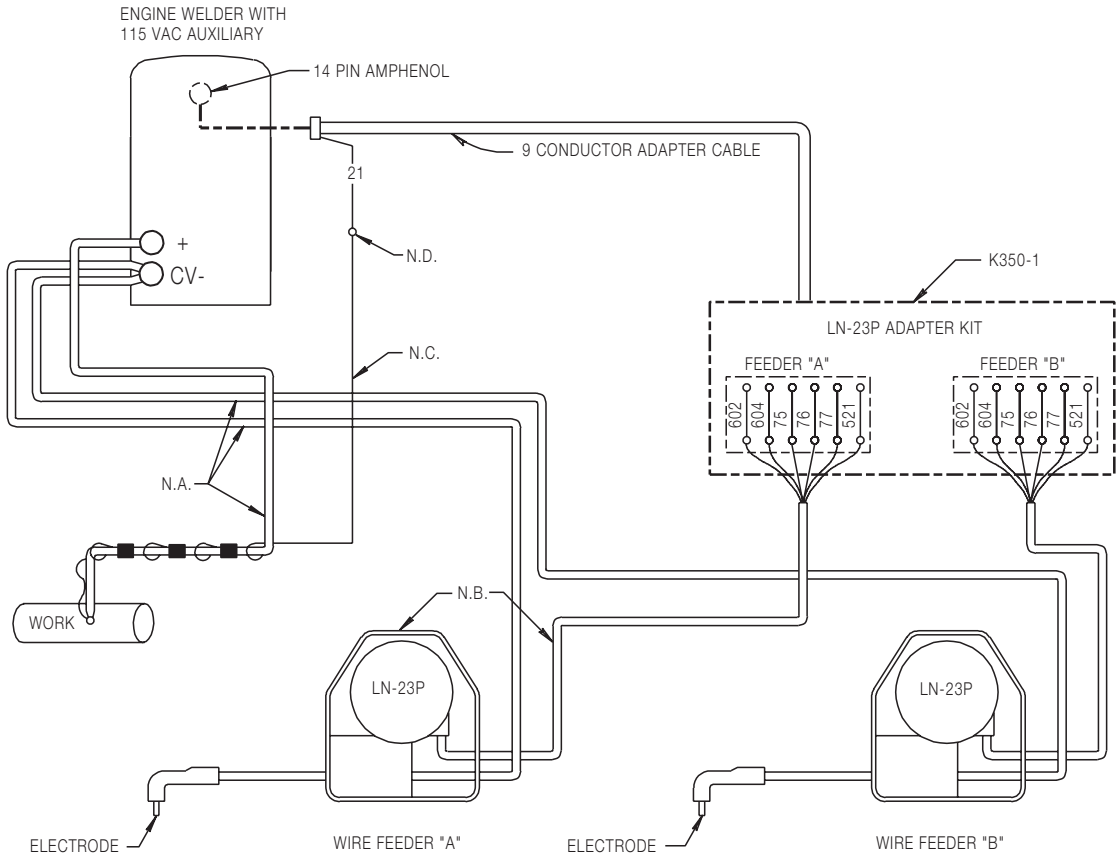

Return to Section TOC
Return to Master TOC

Return to Section TOC
Return to Master TOC

CONNECTION OF THE LN-25 TO THE COMMANDER 300 "ACROSS THE ARC" (SEE FIGURE C.6.)

1. Shut the welder off.
2. Connect the electrode cable from the LN-25 to the "-" terminal of the welder. Connect the work cable to the "+" terminal of the welder.

NOTE: Welding cable must be sized for current and duty cycle of application.

NOTE: Figure C.6 shows the electrode connected for negative polarity. To change polarity, shut the welder off and reverse the electrode and work cables at the Commander 300 output terminals. Reverse the LN-25 polarity switch.

3. Attach the single lead from the LN-25 to the work using the spring clip on the end of the lead. This is only a sense lead – it carries no welding current.
4. Place the IDLER switch in the "AUTO" position.

⚠ CAUTION

If you are using an LN-25 without an internal contactor, the electrode will be "HOT" when the Commander 300 is started.

5. Set the OUTPUT RANGE switch to "WIRE WELDING CV."
6. Set the WELDING TERMINALS switch to 'WELDING TERMINALS ALWAYS ON."
7. Set the VOLTMETER switch to "+" or "-" depending on the polarity chosen.
8. Adjust wire feed speed at the LN-25.
9. Set the LOCAL/REMOTE switch to "REMOTE" if a K444-1 remote control is used.
10. Adjust the ARC CONTROL to the desired level ("soft" or "crisp").

FIGURE C.6
COMMANDER 300/LN-25 ACROSS THE ARC CONNECTION DIAGRAM

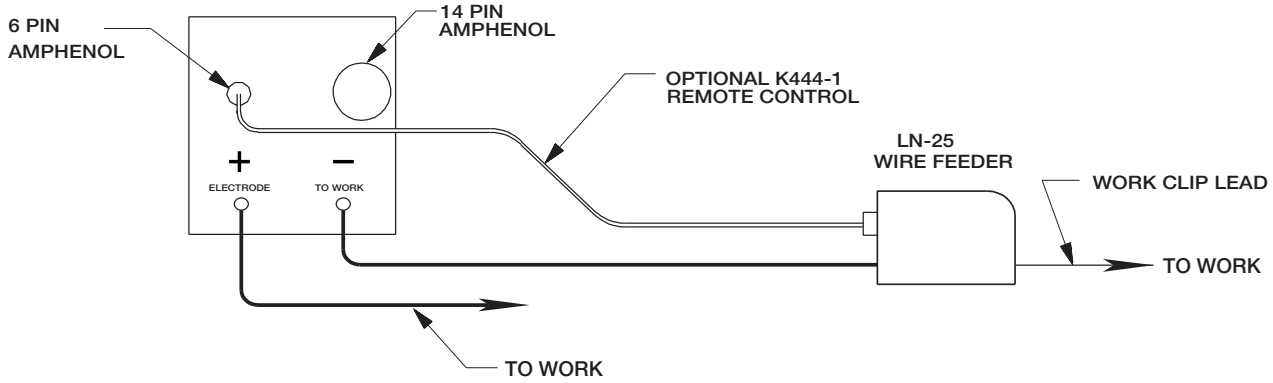

C-10

NOTES

Return to Section TOC
Return to Master TOC
Return to Section TOC
Return to Master TOC
Return to Section TOC
Return to Master TOC
Return to Section TOC
Return to Master TOC

TABLE OF CONTENTS
-MAINTENANCE-

Maintenance ..... **Section D**
Safety Precautions D-2
Routine and Periodic Maintenance D-2
Engine Maintenance D-2
Oil D-2
Change the Oil D-2
Change the Oil Filter D-3
Fuel D-3
Fuel Filter D-4
Bleeding the Fuel System D-4
Air Filter D-4
Cooling System D-4
Cooling Blower Belt D-5
Spark Arrester Screen D-5
Engine Maintenance Schedule D-6
Engine Maintenance Parts D-6
Battery Maintenance D-7
Cleaning the Battery D-7
Checking Specific Gravity D-7
Checking Electrolyte Level D-7
Charging the Battery D-7
Welder/Generator Maintenance D-8
Storage D-8
Cleaning D-8
Name plates D-8
Receptacles D-8
Cable Connections D-8
Major Component Locations D-9

Return to Master TOC
Return to Master TOC
Return to Master TOC
Return to Master TOC

MAINTENANCE

SAFETY PRECAUTIONS

⚠ WARNING

- Have qualified personnel do all maintenance and troubleshooting work.
- Turn the engine off before working inside the machine.
- Remove covers or guards only when necessary to perform maintenance and replace them when the maintenance requiring their removal is complete.
- If covers or guards are missing from the machine, get replacements from a Lincoln Distributor.

Read the Safety Precautions in the front of this manual and in the instruction manual for the diesel engine used with your machine before working on the Commander 300.

Keep all equipment safety guards, covers, and devices in position and in good repair. Keep your hands, hair, clothing, and tools away from the fans, and all other moving parts when starting, operating, or repairing this machine.

ROUTINE AND PERIODIC MAINTENANCE

Refer to ***Figure D.2*** for the location of maintenance components.

ENGINE MAINTENANCE

⚠ CAUTION

To prevent the engine from accidentally starting, disconnect the negative battery cable before servicing the engine.

See ***Table D.1*** for a summary of maintenance intervals for the items listed below. Follow either the hourly or the calendar intervals, whichever come first. More frequent service may be required, depending on your specific application and operating conditions.

OIL: Check the oil level after every 8 hours of operation or daily. BE SURE TO MAINTAIN THE OIL LEVEL.

Change the oil the first time between 25 and 50 hours of operation. Then, under normal operating conditions, change the oil as specified in ***Table D.1.*** If the engine is operated under heavy load or in high ambient temperatures, change the oil more frequently.

CHANGE THE OIL: Change the oil, while the engine is still warm, as follows:

1 . Drain the oil from the drain plug located on the engine bottom, as shown in ***Figure D.1***.

2. Replace the plug and tighten it securely.

3. Remove the oil fill cap and add oil until the level reaches the “MAX” mark on the dipstick. Use high quality detergent oil of API service class CD or better, oil viscosity grade 10W30. Consult the engine manual for oil specifications for various ambient temperatures. Always check the level with the dipstick before adding more oil.

4. Reinstall the oil fill cap and the dipstick.

Return to Section TOC
Return to Master TOC
Return to Section TOC
Return to Master TOC
Return to Section TOC
Return to Master TOC
Return to Section TOC
Return to Master TOC

FIGURE D.1 – OIL DRAIN AND REFILL

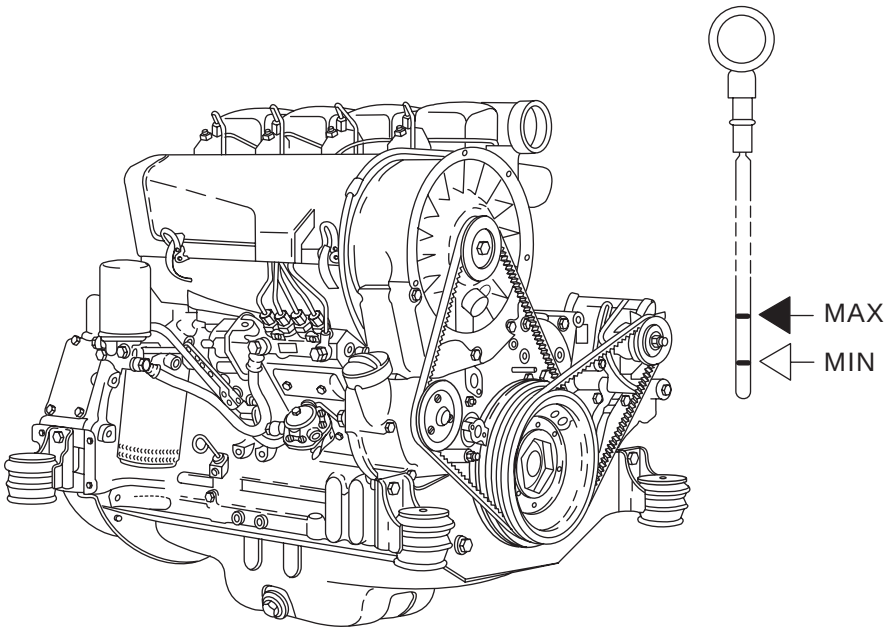

CHANGE THE OIL FILTER: Change the oil filter the first time between 25 and 50 hours of operation. Then, under normal operating conditions, change the oil filter after every 250 hours of operation. If the engine is operated under heavy load or in high ambient temperatures, change the oil filter more frequently. See ***Table D.1*** for recommended maintenance intervals. See ***Table D.2*** for replacement oil filters.

Change the oil filter as follows (See Figure D.1.):

1. Drain the oil from the engine and allow the oil filter to drain.
2. Remove the old filter (spin it off) and discard it. Wipe off the filter mounting surface and adapter.
3. Apply a thin coat of new oil to the rubber gasket on the new oil filter
4. Spin the new filter onto the mounting adapter finger tight until the gasket is evenly seated. Then turn it down another 1/2 turn. Do not over tighten the new filter.
5. Refill the engine with the proper amount and type of oil as described in the ***Change the Oil*** section. Start the engine and check for leaks around the filter element. Correct any leaks (usually by retightening the filter, but only enough to stop leaks) before placing the Commander 300 back in service.
6. If there are no leaks, stop the engine and recheck the oil level. If necessary, add oil to bring the level up to the “MAX” mark, but do not overfill.

FUEL: At the end of each day's use, refill the fuel tank to minimize moisture condensation and dirt contamination in the fuel line. Do not overfill; leave room for the fuel to expand.

Refer to your engine operation manual for recommended grade of fuel.

Return to Section TOC
Return to Master TOC

Return to Section TOC
Return to Master TOC

FUEL FILTER:

⚠ WARNING

When working on the fuel system:



- Keep naked lights away.
- Do not smoke !
- Do not spill fuel !

Inspect the fuel filter daily. Replace the fuel filter cartridge every 1000 hours of operation. Dust and dirt in the fuel system can cause the injection pump and injection nozzle to wear quickly. Replace the fuel filter as follows (See ***Figure D.1.***):

1. Close the fuel stopcock.
2. Loosen the fuel filter cartridge with a removal tool and spin the cartridge off. Catch any escaping fuel in an appropriate container.
3. Clean the sealing surface of the filter carrier. Apply a light film of oil or diesel fuel to the rubber gasket of the new fuel filter cartridge.
4. Screw the new cartridge into position finger tight until the gasket is evenly seated. Then turn it down another 1/2 turn. Do not over tighten the new filter.
5. Open the fuel stopcock. Check the assembly for leaks.

BLEEDING THE FUEL SYSTEM: If the engine is operated until it runs out of fuel, you will need to bleed air from the fuel system in order to start the engine. See the engine operation manual for the recommended procedure.

AIR FILTER

⚠ CAUTION

Excessive air filter restriction will result in reduced engine life.

1. Service air cleaner regularly according to engine operation manual.
2. Stop engine after 100 hours of running time and clean filter element, replace the filter if necessary.

The air filter canister is located behind the engine door on top of the air intake box.

The air filter element is a dry cartridge type. It can be cleaned and reused; however, damaged elements should not be reused. Remove loose dirt from the element with compressed air or a water hose directed from inside out. Compressed Air: 100 psi maximum with nozzles at least one inch away from element. Water Hose: 40 psi maximum without nozzle.

Soak the element in a mild detergent solution for 15 minutes. Do not soak more than 24 hours. Swish the element around in the solution to help remove dirt. Rinse the element from inside out with a gentle stream of water (less than 40 psi) to remove all suds and dirt. Dry the element before reuse with warm air at less than 160° F (71° C). Do not use a light bulb to dry the element.

Inspect for holes and tears by looking through the element toward a bright light. Check for damaged gaskets or dented metal parts. Do not reuse a damaged element. Protect the element from dust and damage during drying and storage.

Replace the air filter after six cleanings. A cleaned filter will have approximately 70% of the life of a new filter element. A restricted filter element may not appear excessively dirty.

COOLING SYSTEM: The Deutz diesel engine is air cooled. Clean the engine cooling system periodically to prevent clogging the air passages on the cylinder heads and oil cooler, which would overheat the engine. Consult the engine operation manual. It is important to locate the welder to provide an unrestricted flow of clean, cool air.

MAINTENANCE

COOLING BLOWER BELT: The following procedure should be followed to replace the cooling blower belt:

1. Allow the machine to cool.
2. Remove the engine case side.
3. Loosen the air filter hose clamp and detach hose.
4. Disconnect the negative battery cable.
5. Remove the engine case back panel for access to the engine.
6. Remove the pulley belt guard (5 screws).
7. Remove the rubber strap on the lower half of the engine fan cowling. Loosen the tensioning pulley (2 bolts).
8. Remove the old V-belt and install a new one. Refer to the engine operation manual for proper tensioning of the belt.
9. Reinstall the rubber strap on the fan cowling, the pulley belt guard, the engine case back, the air filter hose, and the engine case side.
10. Reconnect the negative battery terminal.

SPARK ARRESTER SCREEN: If the muffler has the optional spark arrester, remove it every 50 hours or once a year, whichever comes first, and inspect it. Clean the arrester. Replace it if you find any damage.

Return to Section TOC
Return to Master TOC
Return to Section TOC
Return to Master TOC
Return to Section TOC
Return to Master TOC
Return to Section TOC
Return to Master TOC

MAINTENANCE

TABLE D.1
DEUTZ ENGINE MAINTENANCE SCHEDULE

FREQUENCY	MAINTENANCE REQUIRED
Daily or Before Starting Engine	• Fill fuel tank. • Check oil level. • Check air cleaner for dirty, loose, or damaged parts • Check air intake and cooling areas, clean as necessary.
First 50 Hours and Every 250[1] Hours Thereafter	• Change engine oil. • Change oil filter. • Change fuel filter[2]. • Check fan belt.
Every 50 Hours	• Check fuel lines and clamps.
Every 100 Hours	• Check battery electrolyte level and connections. • Clean air filter.

Refer to your Deutz engine operation manual for periodic maintenance at 100 hours and beyond.

[1]125 Hours for severe conditions.
[2]After the first 50 hours, change the fuel filter every 1000 hours. See the Deutz engine operation manual for specifics.

TABLE D.2
DEUTZ ENGINE MAINTENANCE PARTS

ITEM	MAKE	PART NUMBER
Air Cleaner Element	Donaldson Frame AC Nelson	P181050 CAK-256 A297C 70206N
Cooling Blower Belt	Deutz	117-9565
Oil Filter Element	Deutz	117-4416
Fuel Filter	Deutz	117-4482
Battery		BCI Group 34

Return to Section TOC
Return to Master TOC

BATTERY MAINTENANCE

⚠ WARNING



GASES FROM BATTERY can explode.

- Keep sparks, flame, and cigarettes away from battery.

BATTERY ACID can burn eyes and skin.



- Wear gloves and eye protection and be careful when working near a battery. Follow the instructions printed on the battery.

To prevent EXPLOSION when:

- INSTALLING A NEW BATTERY - Disconnect the negative cable from the old battery first and connect to the new battery last.



- CONNECTING A BATTERY CHARGER - Remove the battery from the welder by disconnecting the negative cable first, then the positive cable and battery clamp. When reinstalling, connect the negative cable last. Keep the area well ventilated.
- USING A BOOSTER - Connect the positive lead to the battery first, then connect the negative lead to the engine foot.
- To prevent BATTERY BUCKLING, tighten the nuts on the battery clamp until snug.

CLEANING THE BATTERY: Keep the battery clean by wiping it with a damp cloth when dirty. If the terminals appear corroded, disconnect the battery cables and wash the terminals with an ammonia solution or a solution of 1/4 pound (0.113 kg) of baking soda and 1 quart (0.946 1) of water. Be sure the battery vent plugs (if equipped) are tight so that none of the solution enters the cells.

After cleaning, flush the outside of the battery, the battery compartment, and surrounding areas with clear water. Coat the battery terminals lightly with petroleum jelly or a non-conductive grease to retard corrosion.

Keep the battery clean and dry. Moisture accumulation on the battery can lead to more rapid discharge and early battery failure.

CHECKING SPECIFIC GRAVITY: Check each battery cell with a hydrometer. A fully charged battery will have a specific gravity of 1.260. Charge the battery if the reading is below 1.215.

NOTE: Correct the specific gravity reading by adding four gravity points (0.004) for every five degrees the electrolyte temperature is above 80° F (27° C). Subtract four gravity points (9.004) for every five degrees the electrolyte temperature is below 80° F (27° C).

CHECKING ELECTROLYTE LEVEL: If battery cells are low, fill them to the neck of the filler hole with distilled water and recharge. If one cell is low, check for leaks.

CHARGING THE BATTERY: The Commander 300 is equipped with a wet charged battery. The charging current is automatically regulated when the battery is low (after starting the engine) to a trickle current when the battery is fully charged.

When you charge, jump, replace, or otherwise connect battery cables to the battery, be sure the polarity is correct. Improper polarity can damage the charging circuit. **The Commander 300 charging system is NEGATIVE GROUND.** The positive (+) battery terminal has a red terminal cover.

If you need to charge the battery with an external charger, disconnect the negative cable first, then the positive cable before you attach the charger leads. After the battery is charged, reconnect the positive battery cable first and the negative cable last. Failure to do so can result in damage to the internal charger components.

Follow the instructions of the battery charger manufacturer for proper charger settings and charging time.

Return to Section TOC
Return to Master TOC

Return to Section TOC
Return to Master TOC

WELDER/GENERATOR MAINTENANCE

STORAGE: Store the Commander 300 in clean, dry, protected areas.

CLEANING: Blow out the generator and controls periodically with low pressure air. Do this at least once a week in particularly dirty areas.

NAME PLATES: Whenever routine maintenance is performed on this machine - or at least yearly - inspect all name plates and labels for legibility. Replace name plates that are no longer clear. Refer to the parts list for the replacement item number.

RECEPTACLES: Keep the electrical receptacles in good condition. Remove any dirt, oil, or other debris from their surfaces and holes.

CABLE CONNECTIONS: Check the welding cable connections at the weld output terminals often. Be sure that the connections are always tight.

Return to Section TOC
Return to Master TOC

FIGURE D.2 - MAJOR COMPONENT LOCATIONS

1. CONTROL PANEL
2. FRONT PANEL ASSEMBLY
3. POWER MODULE/DIODE RECTIFIER BRIDGE ASSEMBLY
4. BASE
5. FUEL TANK
6. ENGINE
7. ROTOR/STATOR
8. IDLER SOLENOID
9. REAR PANEL ASSEMBLY
10. CASE TOP AND SIDES

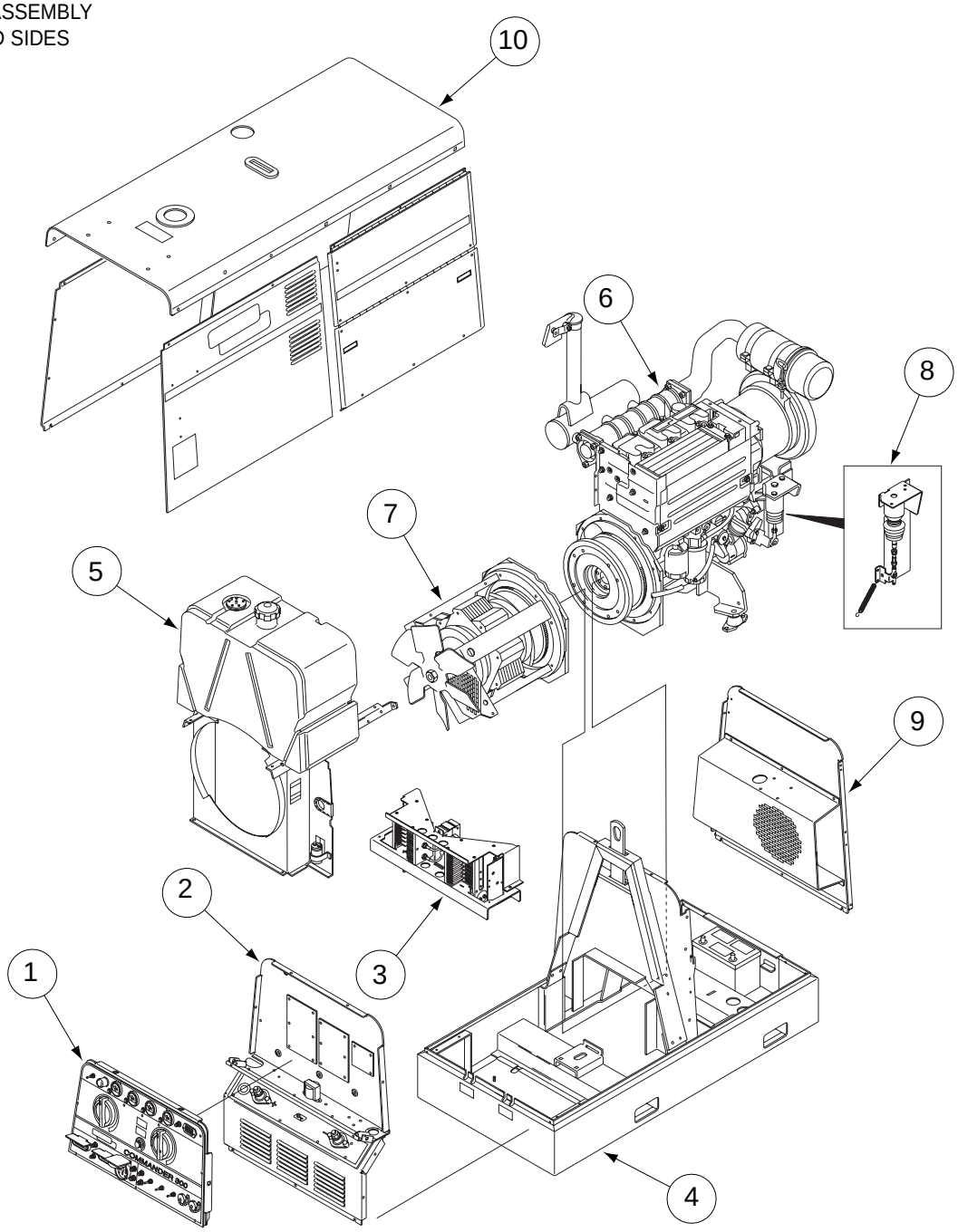

D-10

NOTES

Return to Section TOC
Return to Master TOC
Return to Section TOC
Return to Master TOC
Return to Section TOC
Return to Master TOC
Return to Section TOC
Return to Master TOC

TABLE OF CONTENTS
-THEORY OF OPERATION SECTION-

Theory of Operation .....**Section E**
General Description E-2
Battery, Engine, Rotor, Stator and Engine Protection E-2
Weld Windings, Rectifier, Power Modules and Feedback.....E-3
Control Transformer and Control Board E-4
Insulated Gate Bipolar Transistor (IGBT) Operation E-5
Pulse Width Modulation.....E-6
Chopper Technology Fundamentals.....E-7

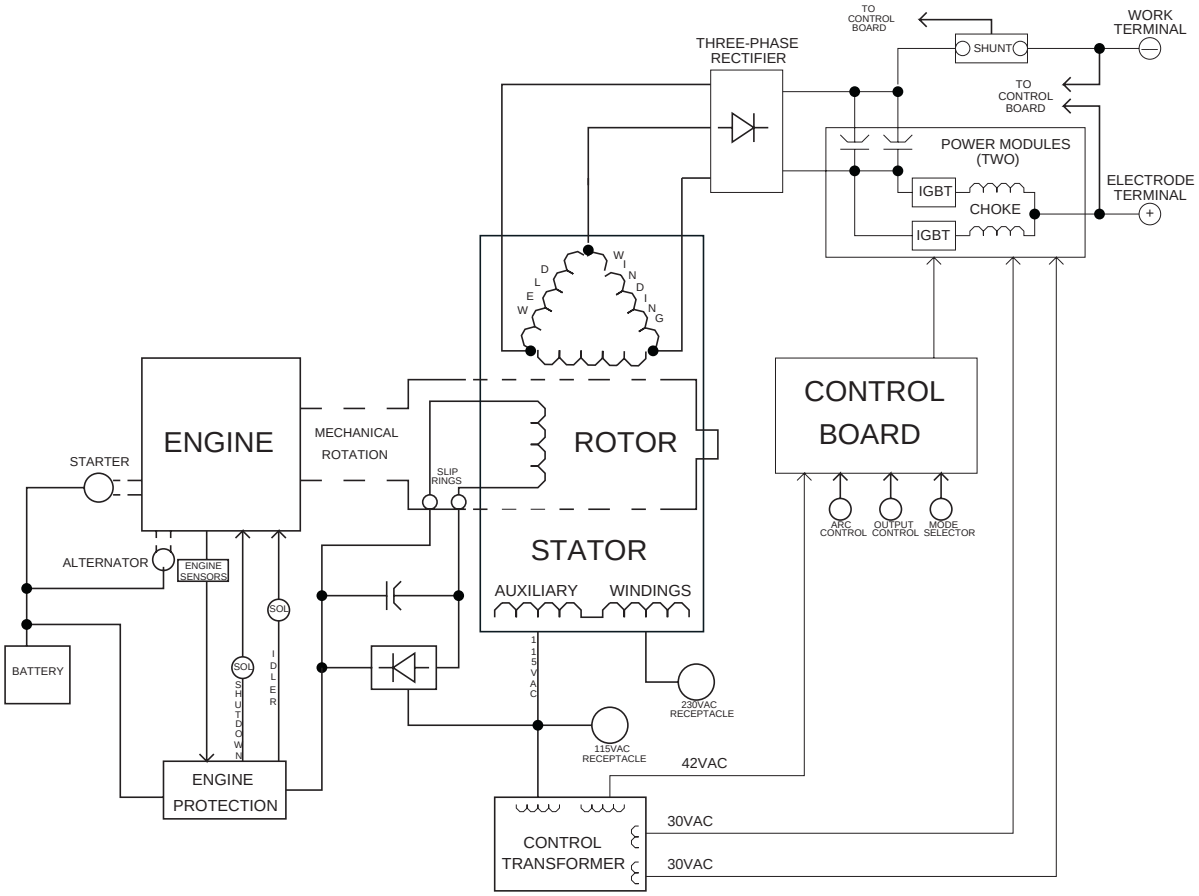

FIGURE E.1 – Commander 300 BLOCK LOGIC DIAGRAM

Return to Master TOC
Return to Master TOC
Return to Master TOC
Return to Master TOC

THEORY OF OPERATION

FIGURE E.2 – BATTERY, STARTER, ENGINE, ROTOR, STATOR AND ENGINE PROTECTION

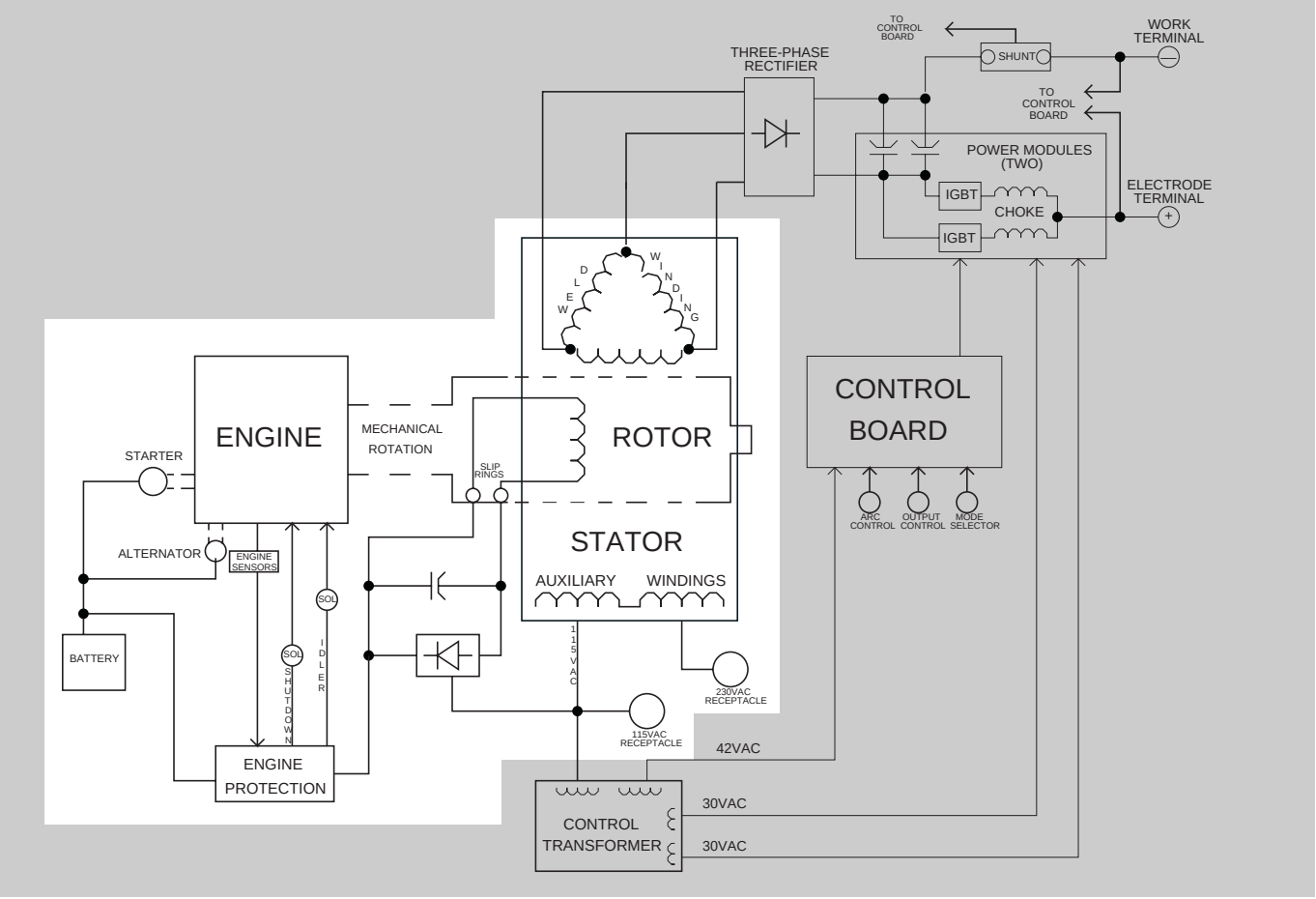

GENERAL DESCRIPTION

The Commander 300 is a diesel engine-driven welding power source capable of producing 300 amps at 32VDC at a 100% duty cycle. The engine is coupled to a brush-type alternating current generator. This AC output is rectified and controlled by ***Chopper Technology*** to produced DC current for multi-purpose welding applications. The Commander 300 is also capable of producing 10,000 watts of AC auxiliary power.

BATTERY, ENGINE, ROTOR, STATOR AND ENGINE PROTECTION

The 12VDC battery powers the engine starter motor and also supplies power to the engine alternator and engine protection board. When the engine is started and running, the battery circuit voltage is fed through the protection board to the rotor field coil via a brush and slip ring configuration. This excitation or “flashing” voltage magnetizes the rotor lamination. The rotor is mechanically coupled to the engine. This rotating magnet induces a voltage in the stationary windings of the main alternator stator. The stator houses a three-phase weld winding and also a 115/230VAC single-phase auxiliary winding. The 115VAC portion of the auxiliary winding is also rectified and serves as a feedback supply for the rotor field winding.

The engine alternator supplies charging current for the battery circuit. The engine protection board monitors the sensors and will shut the engine off in the event of low oil pressure, engine over temperature, malfunction in the engines alternator system or a low fuel condition. The idler solenoid is mechanically connected to the engines throttle linkage. If no welding or auxiliary current is being drawn from the Commander 300, the protection board activates the idler solenoid, which then brings the engine to a low idle state. When output current is sensed, either weld or auxiliary, the protection board deactivates the idler solenoid and the engine returns to high RPM.

NOTE: Unshaded areas of Block Logic Diagram are the subject of discussion.

Return to Section TOC
Return to Master TOC

THEORY OF OPERATION

FIGURE E.3 – WELD WINDINGS, RECTIFIER, POWER MODULES AND FEEDBACK

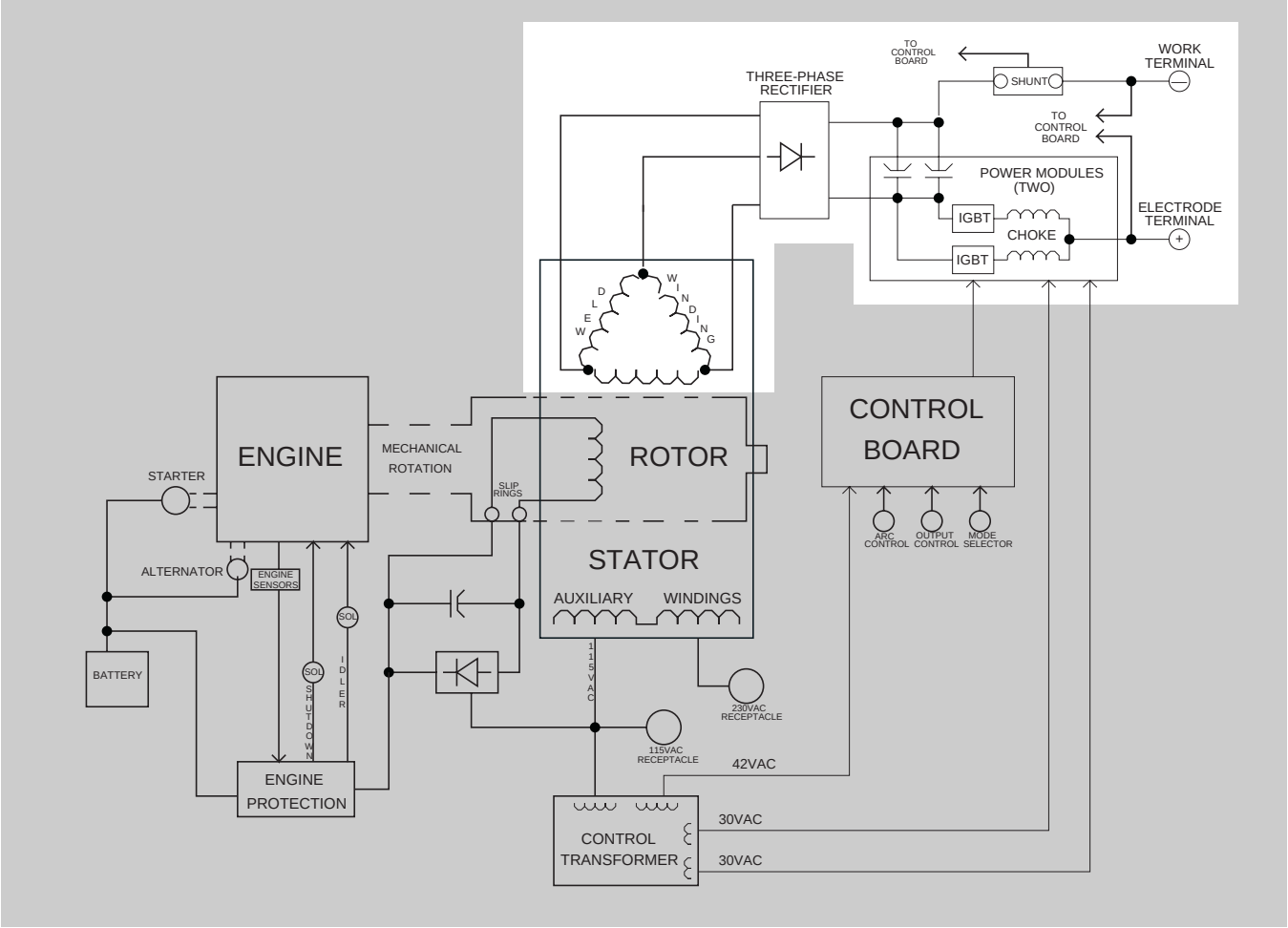

WELD WINDINGS, RECTIFIER, POWER MODULES AND FEEDBACK

The three-phase stator weld windings are connected to a three-phase rectifier bridge. The resultant DC voltage is applied to parallel capacitors incorporated within the two power modules. These capacitors function as filters and also as power supplies for the IGBTs. See ***IGBT Operation*** in this section. The IGBTs act as high-speed switches operating at 20KHZ. These devices are switched on and off by the control board through pulse width modulation circuitry. See ***Pulse Width Modulation*** in this section. This “chopped” DC output is applied through choke coils to the welding output terminals. The chokes function as current filters and also help to balance the outputs of the two power modules. Free-wheeling diodes are incorporated in the power modules to provide a current path for the stored energy in the chokes when the IGBTs are turned off. See ***Chopper Technology*** in this section.

Output voltage and current feedback information is fed to the control board. This information is sensed at the output terminals and the shunt.

NOTE: Unshaded areas of Block Logic Diagram are the subject of discussion.

Return to Section TOC
Return to Master TOC
Return to Section TOC
Return to Master TOC
Return to Section TOC
Return to Master TOC
Return to Section TOC
Return to Master TOC

FIGURE E.4 – CONTROL TRANSFORMER AND CONTROL BOARD

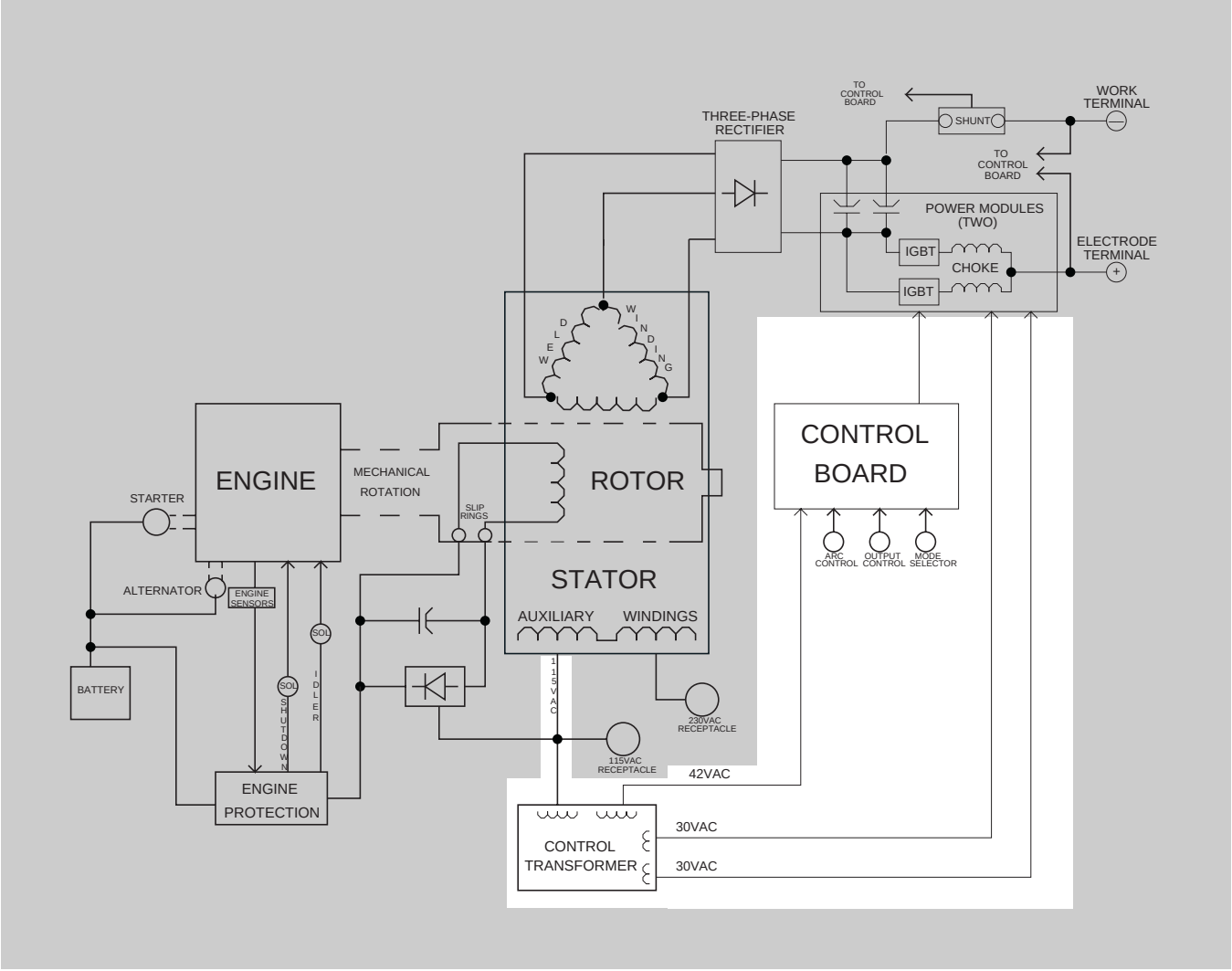

CONTROL TRANSFORMER AND CONTROL BOARD

The control transformer primary winding is powered by the 115VAC auxiliary coil in the stator. Three secondary voltages are developed by the control transformer. The 42VAC is applied to the control board where it is rectified and used to operate the control board circuitry. The two isolated 30VAC windings supply power to the IGBT driver circuits.

The control board monitors the operator controls (output, mode selector and arc control). It compares these commands to the current and voltage feedback information it receives from the shunt and output terminals. The circuitry on the control board determines how the output should be controlled to optimize welding results and sends the correct PWM signals to the IGBT driver circuits.

NOTE: Unshaded areas of Block Logic Diagram are the subject of discussion.

Return to Section TOC
Return to Master TOC

FIGURE E.5 – IGBT OPERATION

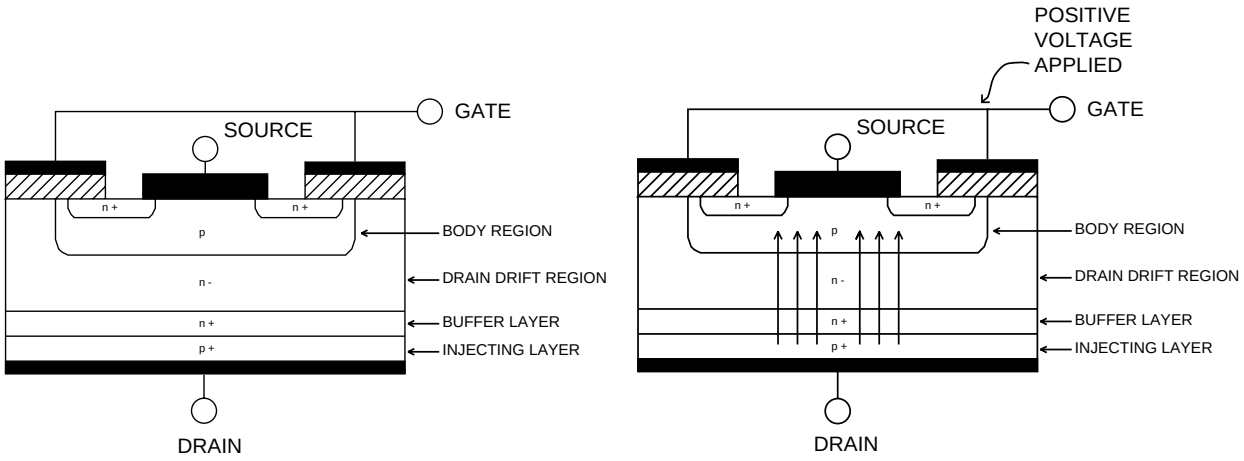

A. PASSIVE **B. ACTIVE**

INSULATED GATE BIPOLAR TRANSISTOR (IGBT) OPERATION

An IGBT is a type of transistor. IGBTs are semiconductors well suited for high frequency switching and high current applications.

Drawing A shows an IGBT in a passive mode. There is no gate signal, zero volts relative to the source, and therefore, no current flow. The drain terminal of the IGBT may be connected to a voltage supply; but since there is no conduction the circuit will not supply current to components connected to the source. The circuit is turned off like a light switch in the OFF position.

Drawing B shows the IGBT in an active mode. When the gate signal, a positive DC voltage relative to the source, is applied to the gate terminal of the IGBT, it is capable of conducting current. A voltage supply connected to the drain terminal will allow the IGBT to conduct and supply current to circuit components coupled to the source. Current will flow through the conducting IGBT to downstream components as long as the positive gate signal is present. This is similar to turning ON a light switch.

Return to Section TOC
Return to Master TOC

FIGURE E.6 – TYPICAL IGBT OUTPUTS

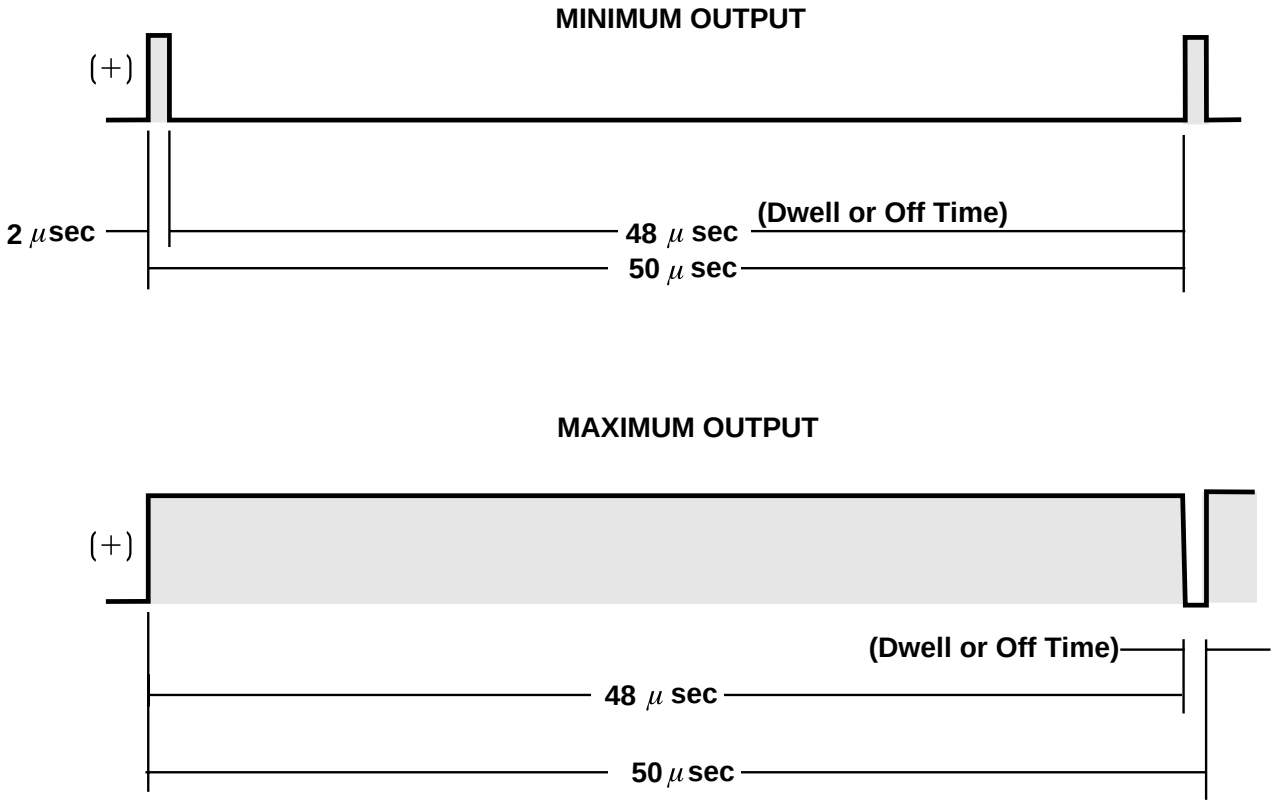

PULSE WIDTH MODULATION

The term PULSE WIDTH MODULATION is used to describe how much time is devoted to conduction in the cycle. Changing the pulse width is known as MODULATION. Pulse Width Modulation (PWM) is the varying of the pulse width over the allowed range of a cycle to affect the output of the machine.

MINIMUM OUTPUT

By controlling the duration of the gate signal, the IGBT is turned on and off for different durations during a cycle. The top drawing shows the minimum output signal possible over a 50-microsecond time period.

The positive portion of the signal represents one IGBT group conducting for 2 microsecond. The dwell time (off time) is 48 microseconds. Since only 2 microseconds of the 50-microsecond time period is devoted to conducting, the output power is minimized.

MAXIMUM OUTPUT

By holding the gate signals on for 48 microseconds and allowing only 2 microseconds of dwell time (off time) during the 50-microsecond cycle, the output is maximized. The darkened area under the top curve can be compared to the area under the bottom curve. The more darkened area under the curve, the more power is present.

Return to Section TOC
Return to Master TOC
Return to Section TOC
Return to Master TOC
Return to Section TOC
Return to Master TOC
Return to Section TOC
Return to Master TOC

Return to Section TOC
Return to Master TOC
Return to Section TOC
Return to Master TOC
Return to Section TOC
Return to Master TOC
Return to Section TOC
Return to Master TOC

CHOPPER TECHNOLOGY FUNDAMENTALS

The new era of welding machines such as the Commander 300, employ a technology whereby a DC source is turned on and off (chopped up) at high speed, then smoothed through an inductor to control an arc. Hence the name “Chopper.” The biggest advantage of the chopper technology is the high-speed control of the arc, similar to the inverter machines. A block diagram for this is as follows:

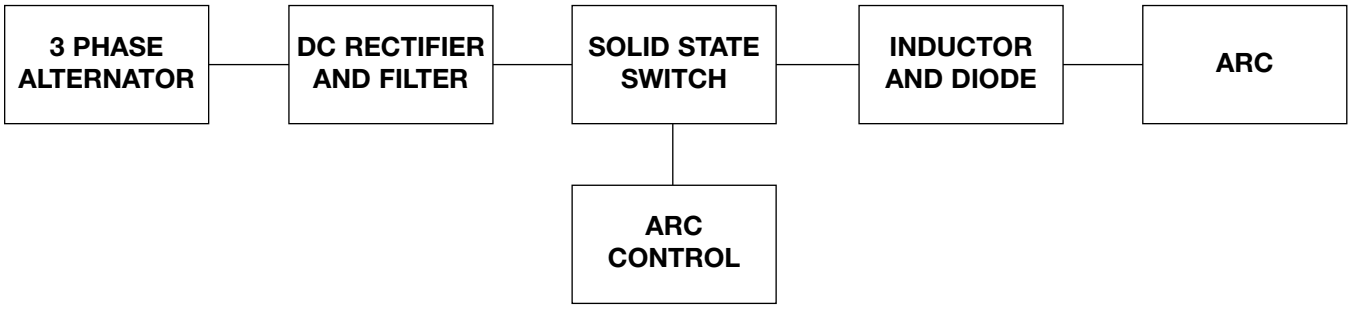

In this system, the engine drives a three-phase alternator, which generates power that is rectified and filtered to produce about 85VDC. The current is applied through a solid state switch to an inductor. By turning the switch on and off, current in the inductor and the arc can be controlled. The following diagram depicts the current flow in the system when the switch is open and closed:

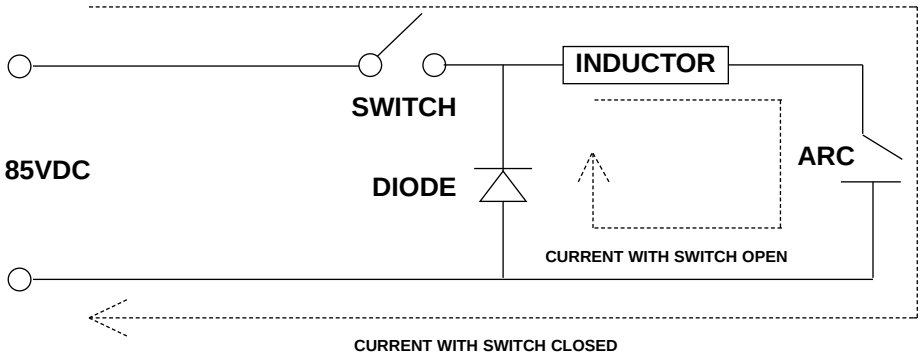

When the switch is closed, current is applied through the inductor to the arc. When the switch opens, current stored in the inductor sustains flow in the arc and through the diode. The repetition rate of switch closure is 20Khz, which allows ultra-fast control of the arc. By varying the ratio of on time versus off time of the switch (Duty Cycle), the current applied to the arc is controlled. This is the basis for Chopper Technology: Controlling the switch in such a way as to produce superior welding.

E-8

NOTES

Return to Section TOC
Return to Master TOC
Return to Section TOC
Return to Master TOC
Return to Section TOC
Return to Master TOC
Return to Section TOC
Return to Master TOC

TABLE OF CONTENTS
TROUBLESHOOTING & REPAIR SECTION

Troubleshooting & Repair Section ..... **Section F**

How to Use Troubleshooting Guide F-2

PC Board Troubleshooting Procedures F-3

Troubleshooting Guide ..... F-4 - F-12

Test Procedures F-13
- Case Cover Removal and Replacement Procedure F-13
- Case Front Knobs - Removal and Replacement Procedure F-18
- Power Module Capacitor Discharge Procedure F-19
- Idler Solenoid Test F-21
- Shutdown Solenoid Test F-23
- Engine Throttle Adjustment Test F-27
- Rotor Resistance Test F-31
- Flashing and Rotor Voltage Test F-33
- Stator Voltage Test F-37
- RF By-Pass Board Resistance Test F-43
- Control Transformer Test F-47
- Output Rectifier Bridge Test F-51
- Power Module Test F-55
- Current Balance Test F-59
- Control Input Test F-63
- Feedback Input Test F-67
- PWM Output Test F-71
- Power Supply Test F-75
- Display Board Calibration Test F-77

Oscilloscope Waveforms F-79
- Normal Open Circuit Voltage Waveform (115 VAC Supply) F-79
- Normal Open Circuit Voltage Waveform (Stick) F-80
- Normal Weld Voltage Waveform (Stick CC) F-81
- Normal Weld Voltage Waveform (Wire CV) F-82
- Normal Open Circuit Voltage Waveform (Wire CV Tap) F-83

Replacement Procedures F-85
- Power Module/Output Rectifier Bridge Assembly Removal and Replacement F-85
- Power Module (Chopper) PC Board Removal and Replacement F-91
- Diode Removal and Replacement F-93
- Stator/Rotor Removal and Replacement F-95

Retest After Repair F-104

Return to Master TOC
Return to Master TOC
Return to Master TOC
Return to Master TOC

Return to Section TOC
Return to Master TOC
Return to Section TOC
Return to Master TOC
Return to Section TOC
Return to Master TOC
Return to Section TOC
Return to Master TOC

HOW TO USE TROUBLESHOOTING GUIDE

⚠ WARNING

Service and repair should be performed by only Lincoln Electric Factory Trained Personnel. Unauthorized repairs performed on this equipment may result in danger to the technician and machine operator and will invalidate your factory warranty. For your safety and to avoid Electrical Shock, please observe all safety notes and precautions detailed throughout this manual.

This Troubleshooting Guide is provided to help you locate and repair possible machine malfunctions. Simply follow the three-step procedure listed below.

Step 1. LOCATE PROBLEM (SYMPTOM). Look under the column labeled “PROBLEM” (SYMPTOMS). This column describes possible symptoms that the machine may exhibit. Find the listing that best describes the symptom that the machine is exhibiting. Symptoms are grouped into four main categories: Output Problems, Function Problems, Engine Problems, and Welding Problems.

Step 2. PERFORM EXTERNAL TESTS. The second column, labeled “POSSIBLE AREAS OF MISADJUSTMENT(S)”, lists the obvious external possibilities that may contribute to the machine symptom. Perform these tests/checks in the order listed. In general, these tests can be conducted without removing the case cover.

Step 3. PERFORM COMPONENT TESTS. The last column, labeled “Recommended Course of Action” lists the most likely components that may have failed in your machine. It also specifies the appropriate test procedure to verify that the subject component is either good or bad. If there are a number of possible components, check the components in the order listed to eliminate one possibility at a time until you locate the cause of your problem.

All of the referenced test procedures referred to in the Troubleshooting Guide are described in detail at the end of this section. Refer to the Troubleshooting and Repair Table of Contents to locate each specific Test Procedure. All of the referred to test points, components, terminal strips, etc., can be found on the referenced electrical wiring diagrams and schematics. Refer to the Electrical Diagrams Section Table of Contents to locate the appropriate diagram.

⚠ CAUTION

If for any reason you do not understand the test procedures or are unable to perform the test/repairs safely, contact the Lincoln Electric Service Department for electrical troubleshooting assistance before you proceed. Call 1-888-935-3877.

TROUBLESHOOTING & REPAIR

PC BOARD TROUBLESHOOTING PROCEDURES

⚠ WARNING



ELECTRIC SHOCK can kill.

- Have an electrician install and service this equipment. Turn the input power OFF at the fuse box before working on equipment. Do not touch electrically hot parts.

⚠ CAUTION

Sometimes machine failures appear to be due to PC board failures. These problems can sometimes be traced to poor electrical connections. To avoid problems when troubleshooting and replacing PC boards, please use the following procedure:

1. Determine to the best of your technical ability that the PC board is the most likely component causing the failure symptom.
2. Check for loose connections at the PC board to assure that the PC board is properly connected.
3. If the problem persists, replace the suspect PC board using standard practices to avoid static electrical damage and electrical shock. Read the warning inside the static resistant bag and perform the following procedures:

PC board can be damaged by static electricity.



ATTENTION Static-Sensitive Devices Handle only at Static-Safe Workstations

- Remove your body's static charge before opening the static-shielding bag. Wear an anti-static wrist strap. For safety, use a 1 Meg ohm resistive cord connected to a grounded part of the equipment frame.

- If you don't have a wrist strap, touch an un-painted, grounded, part of the equipment frame. Keep touching the frame to prevent static build-up. Be sure not to touch any electrically live parts at the same time.

- Tools which come in contact with the PC board must be either conductive, anti-static or static-dissipative.

- Remove the PC board from the static-shielding bag and place it directly into the equipment. Don't set the PC board on or near paper, plastic or cloth which could have a static charge. If the PC board can't be installed immediately, put it back in the static-shielding bag.

- If the PC board uses protective shorting jumpers, don't remove them until installation is complete.

- If you return a PC board to The Lincoln Electric Company for credit, it must be in the static-shielding bag. This will prevent further damage and allow proper failure analysis.

4. Test the machine to determine if the failure symptom has been corrected by the replacement PC board.

NOTE: It is desirable to have a spare (known good) PC board available for PC board troubleshooting.

NOTE: Allow the machine to heat up so that all electrical components can reach their operating temperature.

5. Remove the replacement PC board and substitute it with the original PC board to recreate the original problem.
   a. If the original problem does not reappear by substituting the original board, then the PC board was not the problem. Continue to look for bad connections in the control wiring harness, junction blocks, and terminal strips.
   b. If the original problem is recreated by the substitution of the original board, then the PC board was the problem. Reinstall the replacement PC board and test the machine.
6. Always indicate that this procedure was followed when warranty reports are to be submitted.

NOTE: Following this procedure and writing on the warranty report, "INSTALLED AND SWITCHED PC BOARDS TO VERIFY PROBLEM," will help avoid denial of legitimate PC board warranty claims.

Return to Section TOC Return to Master TOC

TROUBLESHOOTING & REPAIR

Observe Safety Guidelines detailed in the beginning of this manual.

TROUBLESHOOTING GUIDE

PROBLEMS (SYMPTOMS)	POSSIBLE AREAS OF MISADJUSTMENT(S)	RECOMMENDED COURSE OF ACTION
OUTPUT PROBLEMS		
Major physical or electrical damage is evident.	1. Contact your local Lincoln Authorized Field Service Facility.	1. Contact the Lincoln Electric Service Department at 1-888-935-3877.
No welding output in neither Stick or CV modes. The engine operates normally. The auxiliary output is normal.	1. Place the Welding Terminals Switch in the "ALWAYS ON" position. If the problem is solved, the fault may be in the external control cable (if used), leads #2 and #4. See the Wiring Diagram. 2. With the engine at high idle (1900 RPM), the machine in the Stick mode and the OUTPUT CONTROL at maximum, check for the presence of approximately 87VDC (open circuit voltage at the output terminals. 3. If the correct OCV is present at the welding output terminals, check the welding cables, clamps and electrode holder for loose or faulty connections. 4. Make sure that the LOCAL/REMOTE switch is in the correct position.	1. Check for loose or faulty connections on the heavy current carrying leads between the output, the power modules, the choke and the output terminals. 2. Check the Welding Terminals Switch and associated leads. See the Wiring Diagram. 3. If the correct OCV is present when the Welding Terminals Switch is in the "ALWAYS ON" position, perform the RF Bypass Board Resistance Test. Also check associated wiring. See the Wiring Diagram. 4. Check the Remote/Local switch and associated wiring. See the Wiring Diagram. (leads #75, #76 and #77) 5. Perform the ***Stator Voltage Test.*** 6. Perform the ***Output Rectifier Bridge Test.*** 7. Perform the ***Power Module Test.*** 8. Perform the ***Control Transformer Test.*** 9. Perform the ***Power Supply Test.*** 10. Perform the ***Control Input Test***. 11. Perform the ***Feedback Input Test.*** 12. Perform the ***PWM Output Test.*** 13. Perform the ***Current Balance Test*** (codes 10469 & 10470).

⚠ CAUTION

If for any reason you do not understand the test procedures or are unable to perform the test/repairs safely, contact the Lincoln Electric Service Department for electrical troubleshooting assistance before you proceed. Call 1-888-935-3877.

Return to Section TOC
Return to Master TOC
Return to Section TOC
Return to Master TOC
Return to Section TOC
Return to Master TOC
Return to Section TOC
Return to Master TOC

TROUBLESHOOTING & REPAIR

TROUBLESHOOTING GUIDE

Observe Safety Guidelines detailed in the beginning of this manual.

PROBLEMS (SYMPTOMS)	POSSIBLE AREAS OF MISADJUSTMENT(S)	RECOMMENDED COURSE OF ACTION
OUTPUT PROBLEMS		
No welding output in neither Stick or CV modes. Also, no auxiliary power. The engine operates normally.	1. Check the brushes for wear and proper contact to the rotor slip rings. 2. Make sure the engine is operating at the correct high idle speed (1900 RPM). 3. Check for loose or faulty connections or leads on the auxiliary power studs in the control box. See the Wiring Diagram.	1. Perform the ***Rotor Resistance Test.*** 2. Perform the ***Flashing and Rotor Voltage Test.*** If the "flashing" voltage is not present, the protection board or leads #201 or #200 may be faulty. See the Wiring Diagram. Also, make sure that lead #5P has continuity (zero ohms) to ground. 3. Check the field diode and capacitor. Replace if necessary. 4. Perform the ***Stator Voltage Test.***
No auxiliary power at the receptacles. The welding output is normal and the engine operates normally.	1. The circuit breakers may be tripped. Reset if necessary. 2. Check for loose or faulty connections at the auxiliary receptacles.	1. Check the wiring between the auxiliary receptacles, the connection studs in the control box, and the main stator. See the Wiring Diagram. 2. Perform the ***Stator Voltage Test.***

⚠ CAUTION

If for any reason you do not understand the test procedures or are unable to perform the test/repairs safely, contact the Lincoln Electric Service Department for electrical troubleshooting assistance before you proceed. Call 1-888-935-3877.

Return to Section TOC
Return to Master TOC

TROUBLESHOOTING & REPAIR

Observe Safety Guidelines detailed in the beginning of this manual.

TROUBLESHOOTING GUIDE

PROBLEMS (SYMPTOMS)	POSSIBLE AREAS OF MISADJUSTMENT(S)	RECOMMENDED COURSE OF ACTION
OUTPUT PROBLEMS		
The machine has welding output but no control of output. The auxiliary power is normal.	1. If a remote control unit is NOT connected to the machine, make sure the LOCAL/ REMOTE switch is in the "LOCAL" position. 2. If a remote control unit IS connected and the machine operates normally when the switch is in the "Local" position, the remote control cable or unit may be faulty. Check or replace.	1. If the machine operates normally in the "LOCAL" position but not in the "remote" position, perform the ***RF Bypass Board Resistance Test.*** 2. Check the Remote/Local switch and associated wiring. See the Wiring Diagram. (leads #75, #76 and #77) 3. Perform the ***Power Module Test.*** 4. Perform the ***Control Input Test.*** 5. Perform the ***Feedback Input Test.*** 6. Perform the ***PWM Output Test.*** 7. The Control Board may be faulty.
The machine has low welding output and low auxiliary output.	1. Check the brushes for wear and proper contact to the slip rings. 2. The engine RPM may be low.	1. If the engine high idle speed is low, perform the ***Throttle Adjustment Test.*** 2. Perform the ***Rotor Resistance Test.*** 3. Perform the ***Rotor Voltage Test.*** If the rotor voltage is low, the field capacitor or field bridge may be faulty. Test and replace if necessary. See the Wiring Diagram. 4. If the engine high idle RPM is OK, then the engine may have lost horsepower and be in need of major repair.

⚠ CAUTION

If for any reason you do not understand the test procedures or are unable to perform the test/repairs safely, contact the Lincoln Electric Service Department for electrical troubleshooting assistance before you proceed. Call 1-888-935-3877.

Return to Section TOC Return to Master TOC

TROUBLESHOOTING & REPAIR

TROUBLESHOOTING GUIDE

Observe Safety Guidelines detailed in the beginning of this manual.

PROBLEMS (SYMPTOMS)	POSSIBLE AREAS OF MISADJUSTMENT(S)	RECOMMENDED COURSE OF ACTION
FUNCTION PROBLEMS		
The output control on the Commander 300 does not work properly.	1. Make sure the Remote/Local switch is in the “Local” position. 2. The output control (R1) may be defective.	1. Check the Remote/Local switch and associated wiring. See the Wiring Diagram. (leads #75, #76 and #77) 2. Perform the ***Power Supply Test.*** 3. Perform the ***Control Input Test.*** 4. Perform the ***Feedback Input Test.*** 5. Perform the ***PWM Output Test.*** 6. Perform the ***Power Module Test.***
The remote output control does not function properly.	1. Make sure the Remote/Local switch is in the “Remote” position. 2. The remote control unit may be faulty. Repair or replace.	1. Check the Remote/Local switch and associated leads. See the Wiring Diagram. 2. Check the amphenols and associated leads. See the Wiring Diagram. 3. Perform the ***RF Bypass Board Resistance Test.***

⚠ CAUTION

If for any reason you do not understand the test procedures or are unable to perform the test/repairs safely, contact the Lincoln Electric Service Department for electrical troubleshooting assistance before you proceed. Call 1-888-935-3877.

Return to Section TOC
Return to Master TOC
Return to Section TOC
Return to Master TOC
Return to Section TOC
Return to Master TOC
Return to Section TOC
Return to Master TOC

TROUBLESHOOTING & REPAIR

Observe Safety Guidelines detailed in the beginning of this manual.

TROUBLESHOOTING GUIDE

PROBLEMS (SYMPTOMS)	POSSIBLE AREAS OF MISADJUSTMENT(S)	RECOMMENDED COURSE OF ACTION
FUNCTION PROBLEMS		
The wire feeder does not work when connected to the welder amphenol.	1. Check the circuit breaker (CB5). Reset if tripped. 2. The wire feeder control cable may be faulty. 3. The wire feeder may be faulty.	1. Check for the presence of 115VAC at leads #31(J) and #32(A) at the 14-pin amphenol. 2. If the 115VAC is NOT present at the 14-pin amphenol, check leads #31 and #32 for loose or faulty connections. See the Wiring Diagram. 3. Perform the ***Stator Voltage Test.***
The battery does not stay charged.	1. Check for loose or faulty connections at the battery and engine charging system. 2. The battery may be faulty. Check or replace.	1. The battery charging circuit may be faulty. See the Wiring Diagram.

⚠ CAUTION

If for any reason you do not understand the test procedures or are unable to perform the test/repairs safely, contact the Lincoln Electric Service Department for electrical troubleshooting assistance before you proceed. Call 1-888-935-3877.

Return to Section TOC
Return to Master TOC
Return to Section TOC
Return to Master TOC
Return to Section TOC
Return to Master TOC
Return to Section TOC
Return to Master TOC

TROUBLESHOOTING & REPAIR

TROUBLESHOOTING GUIDE

Observe Safety Guidelines detailed in the beginning of this manual.

PROBLEMS (SYMPTOMS)	POSSIBLE AREAS OF MISADJUSTMENT(S)	RECOMMENDED COURSE OF ACTION
ENGINE PROBLEMS		
The engine will not crank when the start button is pushed.	1. Check for loose or faulty battery cable connections. 2. The battery may be low or faulty.	1. If the battery is replaced or tests good, then the charging circuit may be faulty. See the Wiring Diagram. 2. The starter motor or starter solenoid may be faulty. 3. The engine may be hard to crank due to a mechanical failure in the engine.
The engine cranks, but will not start.	1. Check for adequate fuel supply. 2. Make sure the fuel shut off valve is in the open position. 3. The engine oil temperature may be too high. Check cooling system. 4. The battery voltage may be too low.	1. The shutdown solenoid may be faulty. Perform the ***Fuel Shutdown Solenoid Test.*** 2. The engine protection board may be faulty. With the Run/Stop switch in the "Run" position, the protection board should normally supply 10VDC to the shutdown solenoid via leads #224 and #262. See the Wiring Diagram. 3. The engine may be in need of mechanical repair.

⚠ CAUTION

If for any reason you do not understand the test procedures or are unable to perform the test/repairs safely, contact the Lincoln Electric Service Department for electrical troubleshooting assistance before you proceed. Call 1-888-935-3877.

Return to Section TOC
Return to Master TOC
Return to Section TOC
Return to Master TOC
Return to Section TOC
Return to Master TOC
Return to Section TOC
Return to Master TOC

TROUBLESHOOTING & REPAIR

Observe Safety Guidelines detailed in the beginning of this manual.

TROUBLESHOOTING GUIDE

PROBLEMS (SYMPTOMS)	POSSIBLE AREAS OF MISADJUSTMENT(S)	RECOMMENDED COURSE OF ACTION
ENGINE PROBLEMS		
The engine shuts down shortly after starting.	1. Check for adequate fuel supply. 2. If any indicator light is lit when the engine shuts down, that particular system has faulted. Check system. 3. Check the battery cables for loose or faulty connections.	1. Check the Run/Stop switch and associated leads for loose or faulty connections. 2. Perform the ***Fuel Shutdown Solenoid Test.*** 3. The engine protection board may be faulty. With the Run/Stop switch in the "Run" position, the protection board should normally supply 10VDC to the shutdown solenoid via leads #224 and #262. See the Wiring Diagram.
The engine will not idle down to low speed. The machine has normal weld output and auxiliary power.	1. Make sure the idler switch is in the "Auto" position. 2. Make sure there is NOT an external load on the weld terminals nor the auxiliary power receptacles. 3. Check for mechanical restrictions in the solenoid linkage.	1. Perform the ***Idler Solenoid Test.*** 2. The engine protection board may be faulty.

⚠ CAUTION

If for any reason you do not understand the test procedures or are unable to perform the test/repairs safely, contact the Lincoln Electric Service Department for electrical troubleshooting assistance before you proceed. Call 1-888-935-3877.

Return to Section TOC
Return to Master TOC
Return to Section TOC
Return to Master TOC
Return to Section TOC
Return to Master TOC
Return to Section TOC
Return to Master TOC

TROUBLESHOOTING & REPAIR

TROUBLESHOOTING GUIDE

Observe Safety Guidelines detailed in the beginning of this manual.

PROBLEMS (SYMPTOMS)	POSSIBLE AREAS OF MISADJUSTMENT(S)	RECOMMENDED COURSE OF ACTION
ENGINE PROBLEMS		
The engine will not go to high idle when using the auxiliary power. Auxiliary power is normal when the idler switch is in the “high” position. Automatic idle function works properly when the welding terminals are loaded.	1. Make sure the auxiliary power leads are tight. 2. The automatic idler may not function if the auxiliary power is loaded to less than 150 watts.	1. Check the current sensing toroid for loose or faulty connections. See the Wiring Diagram. 2. Make sure leads #3 and #6A pass through the toroid twice in opposite directions. 3. The current sensing toroid may be faulty. 4. The engine protection board may be faulty.
The engine will not go to high idle when attempting to weld or when the auxiliary power is loaded. Welding output and auxiliary power outputs are normal when idler switch is in the “High” position.	1. Make sure the welding cables and auxiliary power lead connections are tight.	1. The engine protection board may be faulty.
The machine goes to low idle but does not stay at low idle.	1. Make sure there is NOT an external load (auxiliary or weld) connected to the Commander 300.	1. The idler solenoid linkage may be misadjusted or damaged. 2. The idler solenoid lead connections (#226A and #237A) may be loose or damaged. 3. Perform the ***Idler Solenoid Test.*** 4. The engine protection board may be faulty.

⚠ CAUTION

If for any reason you do not understand the test procedures or are unable to perform the test/repairs safely, contact the Lincoln Electric Service Department for electrical troubleshooting assistance before you proceed. Call 1-888-935-3877.

Return to Section TOC
Return to Master TOC
Return to Section TOC
Return to Master TOC
Return to Section TOC
Return to Master TOC
Return to Section TOC
Return to Master TOC

TROUBLESHOOTING & REPAIR

TROUBLESHOOTING GUIDE

Observe Safety Guidelines detailed in the beginning of this manual.

PROBLEMS (SYMPTOMS)	POSSIBLE AREAS OF MISADJUSTMENT(S)	RECOMMENDED COURSE OF ACTION
WELDING PROBLEMS		
The welding arc is "cold." The engine runs normally. The auxiliary power is normal.	1. Check for loose or faulty connections at the weld output terminals and welding cable connections. 2. Make sure the work clamp has a clean connection to the work piece. 3. The welding cables may be too long or coiled, causing an excessive voltage drop. 4. Make sure the electrode (wire, gas, voltage, current, etc.) is correct for the process being used. 5. Make sure the machine settings match the weld application.	1. Check for the correct OCV at the welding output terminals. If the correct voltage is present at the output terminals, check for loose connection on the heavy current carrying leads inside the Commander 300. See the Wiring Diagram. 2. If the OCV is low at the welder output terminals, perform the ***Engine Throttle Adjustment Test.*** 3. Perform the ***Output Rectifier Bridge Test.*** 4. Perform the ***Stator Voltage Test.*** 5. Perform the ***Power Module Test.*** 6. Perform the ***Control Input Test.*** 7. Perform the ***Feedback Input Test.*** 8. Perform the ***PWM Output Test.*** 9. If so equipped, perform the ***Display Board Calibration Test.***
The welding arc is "hot". The engine runs normally. The auxiliary power is normal.	1. Make sure the electrode (wire, gas, voltage, current, ect.) is correct for the process being used. 2. Make sure the machine settings match the weld application.	1. Perform the ***Power Module Test.*** 2. Perform the ***Control Input Test.*** 3. Perform the ***Feedback Input Test.*** 4. Perform the ***PWM Output Test.*** 5. If so equipped, perform the ***Display Board Calibration Test.***

⚠ CAUTION

If for any reason you do not understand the test procedures or are unable to perform the test/repairs safely, contact the Lincoln Electric Service Department for electrical troubleshooting assistance before you proceed. Call 1-888-935-3877.

Return to Section TOC
Return to Master TOC
Return to Section TOC
Return to Master TOC
Return to Section TOC
Return to Master TOC
Return to Section TOC
Return to Master TOC

Return to Section TOC
Return to Master TOC
Return to Section TOC
Return to Master TOC
Return to Section TOC
Return to Master TOC
Return to Section TOC
Return to Master TOC

CASE COVER REMOVAL AND REPLACEMENT PROCEDURE

⚠ WARNING

Service and repair should be performed by only Lincoln Electric factory trained personnel. Unauthorized repairs performed on this equipment may result in danger to the technician or machine operator and will invalidate your factory warranty. For your safety and to avoid electrical shock, please observe all safety notes and precautions detailed throughout this manual.

If for any reason you do not understand the test procedures or are unable to perform the test/repairs safely, contact the Lincoln Electric Service Department for electrical troubleshooting assistance before you proceed. Call 1-888-935-3877.

TEST DESCRIPTION

This procedure will aid the technician in the removal and replacement of the case sheet metal covers.

MATERIALS NEEDED

3/8" wrench
7/16" wrench
1/2" wrench
3/4" wrench

This procedure should take approximately 30 minutes to perform.

Return to Section TOC
Return to Master TOC

CASE COVER REMOVAL AND REPLACEMENT PROCEDURE *(continued)*

FIGURE F.1 – DOOR REMOVAL

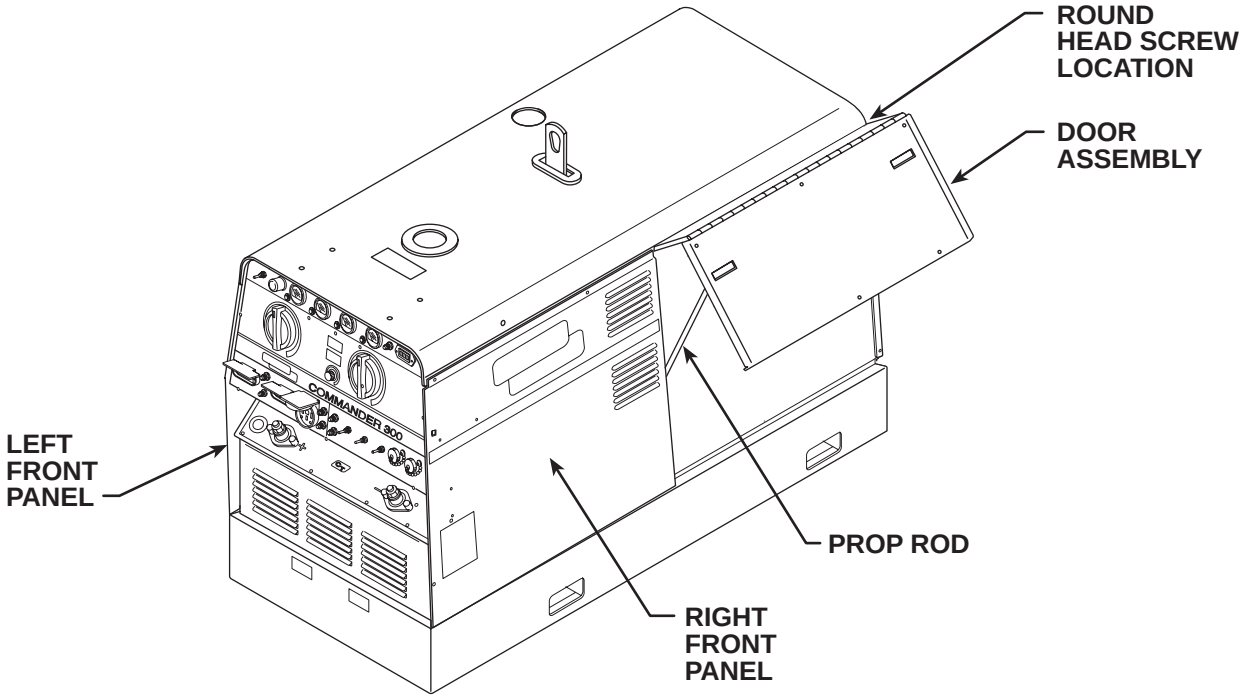

PROCEDURE

1. Turn the engine off.
2. Using the 3/8" wrench, remove the battery cover. Slide the battery out and disconnect the negative battery cable.
3. Unlatch and open the engine service access door. See Figure F.1.
4. Support the door assembly. Using the 3/8" wrench, remove the #10-24 round head screw, lock washer, flat washer, and nut from the top corner of the door hinge assembly, where it attaches to the roof. Remove the support rod.

CASE COVER REMOVAL AND REPLACEMENT PROCEDURE *(continued)*

FIGURE F.2 – FRONT PANEL/ROOF DETAILS

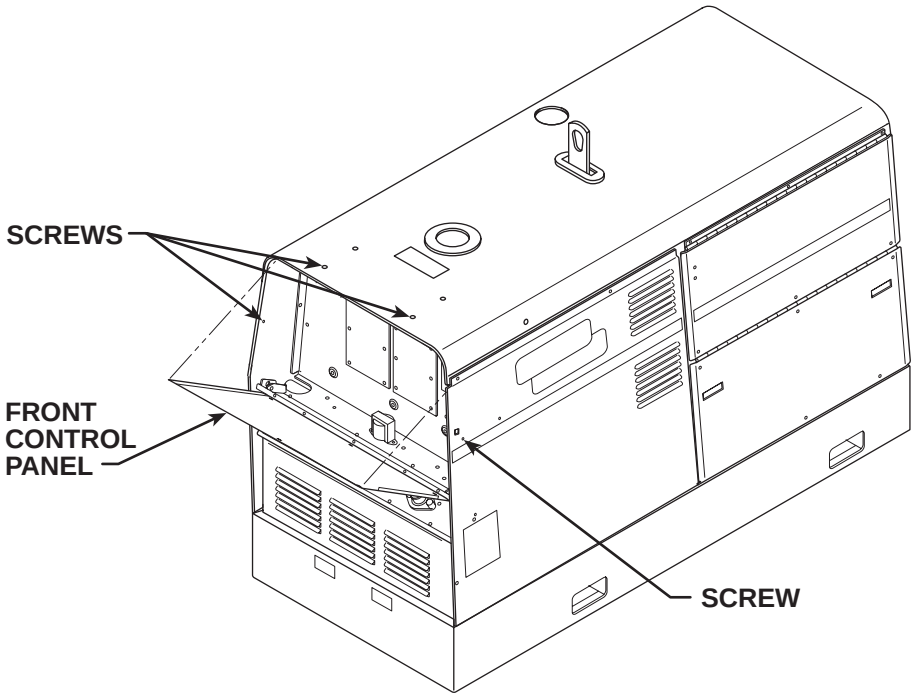

5. Using the 3/8" wrench, remove the two screws from the top front of the roof assembly and the two screws from the sides of the control box. Carefully lower the front control panel. See Figure F.2.
6. With 3/8" wrench, remove the right rear panel and the right and left front panels. See ***Figure F.1.***
7. With the 1/2" wrench, remove the exhaust pipe rain cap.
8. Remove the fuel tank cap, gasket, and the lift bail cover seal.
9. With the help of an assistant, carefully remove the roof. The door assembly remains attached to the roof. Replace the fuel cap.

Return to Section TOC
Return to Master TOC

Return to Section TOC
Return to Master TOC

CASE COVER REMOVAL AND REPLACEMENT PROCEDURE *(continued)*

FIGURE F.3 – OUTPUT PANEL REMOVAL

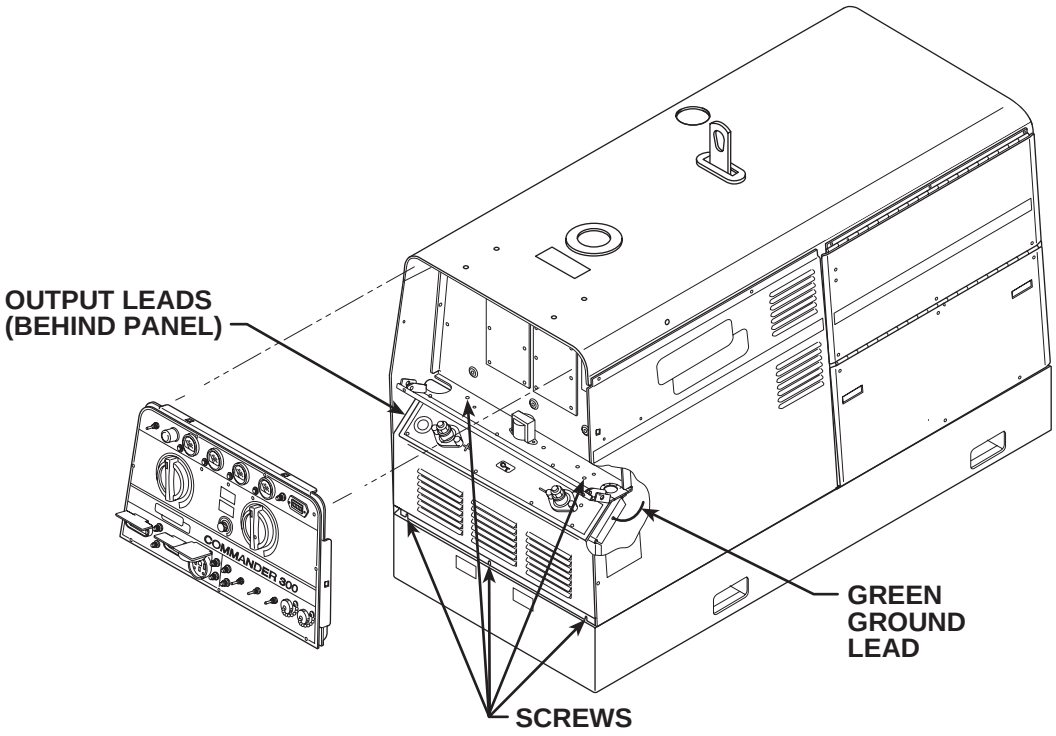

OUTPUT PANEL REMOVAL

1. Using the 3/4" wrench, remove the internal leads from the positive and negative output terminals. See Figure F.3.
2. Using the 3/8" wrench, remove the three screws along the bottom of the output panel. Then remove the two screws holding the top of the panel. These are accessed in the control box, on the bottom at each side of the box. See Figure F.3.
3. Using the 3/8" wrench, remove the green ground lead from the panel.
4. The output panel can now be removed and set aside.

CASE COVER REMOVAL AND REPLACEMENT PROCEDURE *(continued)*

REASSEMBLY PROCEDURE

1. Output panel: Set the panel in place.
2. Install the five screws that mount the panel at the top and bottom.
3. Attach the green ground lead.
4. Install the internal leads to the output terminals.
5. Side panels, roof and door assembly: Remove the fuel cap. With the help of an assistant, carefully set the roof/door assembly in place. Replace the fuel tank gasket and the lift bail cover seal. Replace the fuel cap. Install the exhaust pipe rain cap.
6. Install the right rear panel and the right and left front panels. Raise the control panel front and install the two screws at the roof and the two at the sides.
7. Install the support rod and the #10-24 round head screw, washer, and nut.

Return to Section TOC
Return to Master TOC
Return to Section TOC
Return to Master TOC
Return to Section TOC
Return to Master TOC
Return to Section TOC
Return to Master TOC

CASE FRONT KNOBS - REMOVAL AND REPLACEMENT PROCEDURE

Removal

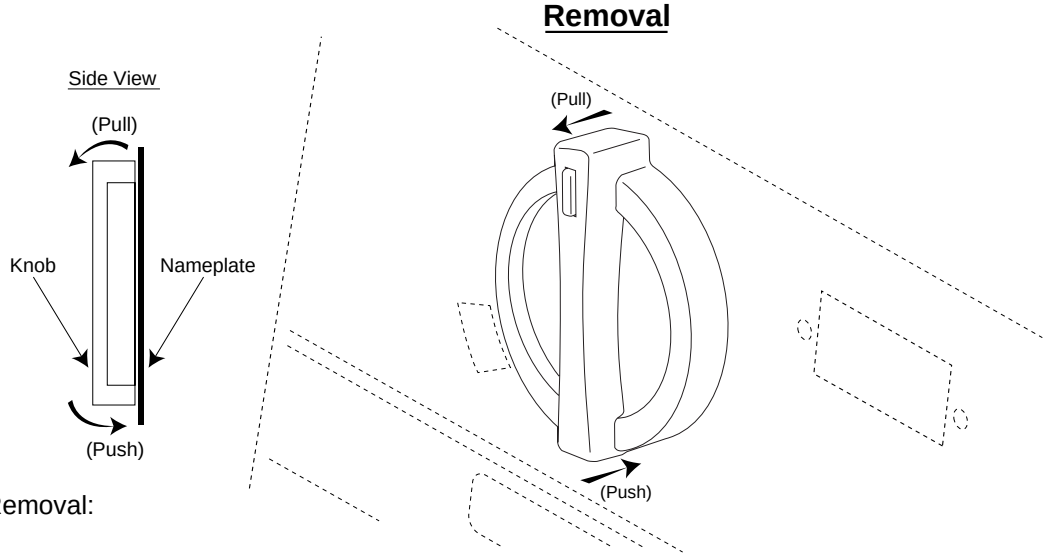

Removal:

1. Rotate the handle portion of the knob to an approximate vertical orientation (switch detent may position handle a few degrees off vertical). This orientation should be noted and repeated at replacement for proper "D" shaft orientation.
2. With one hand, grasp the very bottom of vertical handle and push towards the machine nameplate and pull down. At the same time and with the other hand, grasp the very top of the handle and pull the top edge of the knob away from the machine nameplate. The knob should "peel" away from the nameplate and the white nylon holding fingers of the knob base, from top to bottom.

Replacement

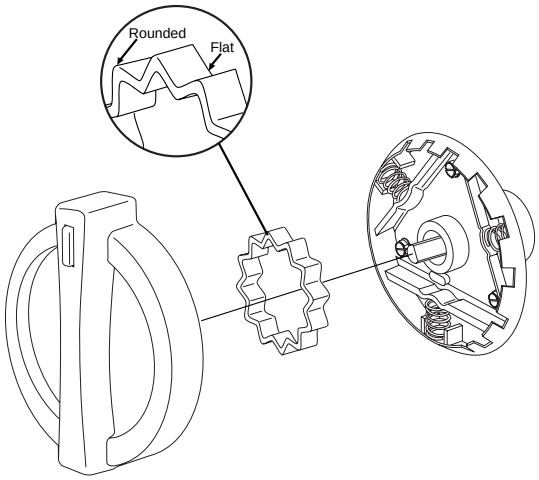

Replacement:

1. If the white nylon cam of the detent mechanism is removed from it's spring loaded base by the above procedure or intentionally, it should be returned before the knob replacement is attempted. Press the cam into it's spring loaded holder so it sets flat and flush (Selector Switch Only).
2. Orientate the knob handle to the vertical as noted above and position the knob over the base, centered and parallel.
3. Press the knob onto the "D" shaft and white nylon holding fingers, maintaining the parallel position. The knob should "click" into place and should not pull off with normal operation.

Return to Section TOC
Return to Master TOC

Return to Section TOC
Return to Master TOC

POWER MODULE CAPACITOR DISCHARGE PROCEDURE

⚠ WARNING

Service and repair should be performed by only Lincoln Electric factory trained personnel. Unauthorized repairs performed on this equipment may result in danger to the technician or machine operator and will invalidate your factory warranty. For your safety and to avoid electrical shock, please observe all safety notes and precautions detailed throughout this manual.

If for any reason you do not understand the test procedures or are unable to perform the test/repairs safely, contact the Lincoln Electric Service Department for electrical troubleshooting assistance before you proceed. Call 1-888-935-3877.

TEST DESCRIPTION

This procedure will insure that the large capacitors in the power modules have been discharged. This procedure should be performed whenever work is to be attempted on or near the power modules.

MATERIALS NEEDED

3/8" Wrench
Volt/Ohmmeter
Resistor (25-1000 ohms and 25 watts minimum)
Jumper leads

This procedure should take approximately 15 minutes to perform.

POWER MODULE CAPACITOR DISCHARGE PROCEDURE *(continued)*

FIGURE F.4 – POWER MODULE CAPACITOR TERMINAL DISCHARGE

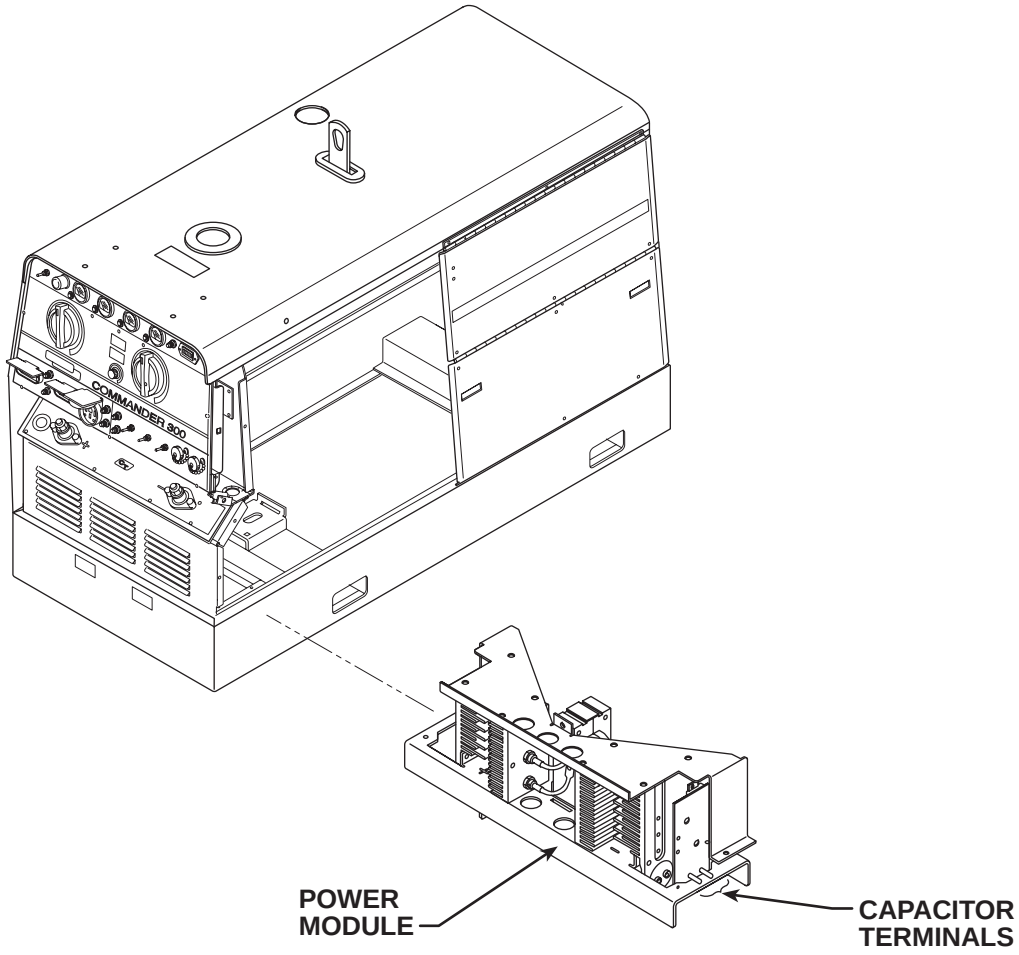

TEST PROCEDURE

1. This procedure must be performed with the engine off.
2. Using the 3/8" wrench, remove the front left and right side panels.
3. Locate the two power modules (one on each side). See Figure F.4.
4. Using the resistor and jumper leads, CAREFULLY discharge the capacitor terminals. **NEVER USE A SHORTING STRAP FOR THIS PURPOSE.** DO NOT TOUCH THE TERMINALS WITH YOUR BARE HANDS. Repeat procedure on the other side.
5. Check the voltage across the capacitor terminals. It should be zero volts.

Return to Section TOC
Return to Master TOC

Return to Section TOC
Return to Master TOC
Return to Section TOC
Return to Master TOC
Return to Section TOC
Return to Master TOC
Return to Section TOC
Return to Master TOC

IDLER SOLENOID TEST

⚠ WARNING

Service and repair should be performed by only Lincoln Electric factory trained personnel. Unauthorized repairs performed on this equipment may result in danger to the technician or machine operator and will invalidate your factory warranty. For your safety and to avoid electrical shock, please observe all safety notes and precautions detailed throughout this manual.

If for any reason you do not understand the test procedures or are unable to perform the test/repairs safely, contact the Lincoln Electric Service Department for electrical troubleshooting assistance before you proceed. Call 1-888-935-3877.

TEST DESCRIPTION

This test will determine if the idler solenoid is capable of functioning when it is energized with 12VDC.

MATERIALS NEEDED

External 12VDC supply (30 amps)
Wiring Diagram
Volt/Ohmmeter

This procedure should take approximately 25 minutes to perform.

IDLER SOLENOID TEST *(continued)*

FIGURE F.5 – IDLER SOLENOID LEADS

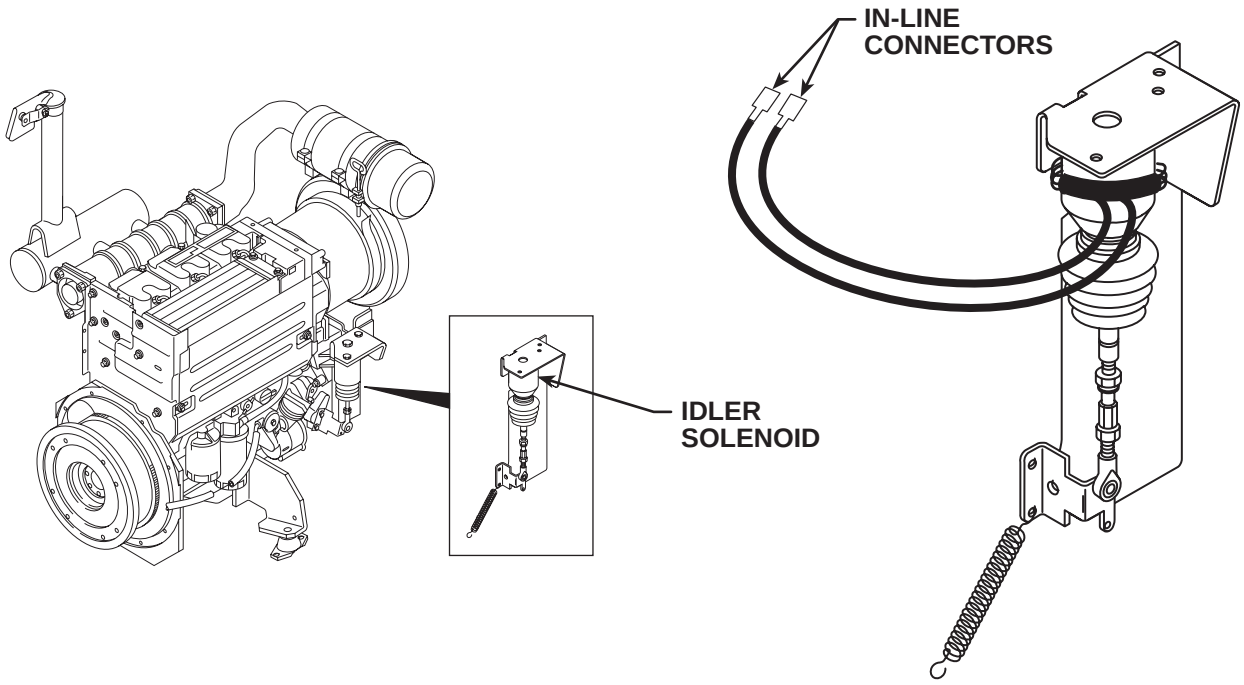

TEST PROCEDURE

1. Turn the engine off.
2. Unlatch, lift, and secure the right side engine service access door.
3. Locate and remove the two in-line connectors that attach the idler solenoid leads to the wiring harness leads (#226A, #237A). See Figure F.5 and the Wiring Diagram.
4. Check the coil resistance. The normal resistance is approximately 4.5 ohms. If the coil resistance is not correct, the solenoid may be faulty. Replace.
5. Using the external 12VDC supply, apply 12VDC to the solenoid leads. The solenoid should activate. The solenoid should deactivate when the 12VDC is removed.
6. If the solenoid does not operate properly, check for a mechanical restriction in the linkage.
7. If the linkage is intact and the solenoid does not operate correctly when the 12VDC is applied, the solenoid may be faulty. Replace.
8. Replace leads #226A and #237A to the correct in-line connectors. See Figure F.5 and the wiring diagram. Replace any previously removed wire wraps.
9. Close and secure the right side engine service access door.

Return to Section TOC
Return to Master TOC

Return to Section TOC
Return to Master TOC
Return to Section TOC
Return to Master TOC
Return to Section TOC
Return to Master TOC
Return to Section TOC
Return to Master TOC

SHUTDOWN SOLENOID TEST

⚠ WARNING

Service and repair should be performed by only Lincoln Electric factory trained personnel. Unauthorized repairs performed on this equipment may result in danger to the technician or machine operator and will invalidate your factory warranty. For your safety and to avoid electrical shock, please observe all safety notes and precautions detailed throughout this manual.

If for any reason you do not understand the test procedures or are unable to perform the test/repairs safely, contact the Lincoln Electric Service Department for electrical troubleshooting assistance before you proceed. Call 1-888-935-3877.

TEST DESCRIPTION

This test will determine if the shutdown solenoid is capable of functioning when it is energized with 12VDC.

MATERIALS NEEDED

External 12VDC supply (10 amps minimum)
Wiring Diagram
Volt/Ohmmeter
3/8" Socket wrench

This procedure should take approximately 30 minutes to perform.

Return to Section TOC
Return to Master TOC

SHUTDOWN SOLENOID TEST *(continued)*

FIGURE F.6 - PLUG J30 LOCATION

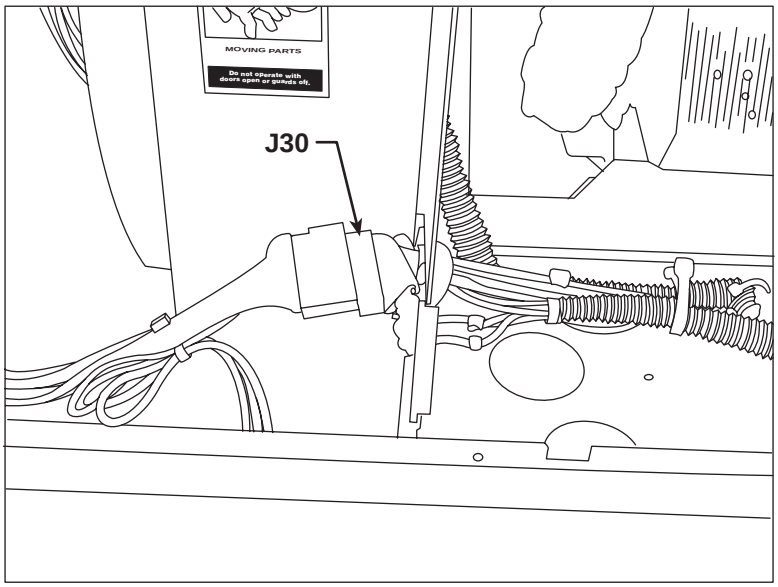

TEST PROCEDURE

1. Turn the engine off.
2. Unlatch, lift, and secure the right side engine service access door.
3. Using the 3/8" wrench, remove the right front case side.
4. Locate and unplug J30 from P30. See Figure F.6 and the Wiring Diagram.

SHUTDOWN SOLENOID TEST *(continued)*

FIGURE F.7 – PLUG J30 PIN/LEAD ASSIGNMENTS

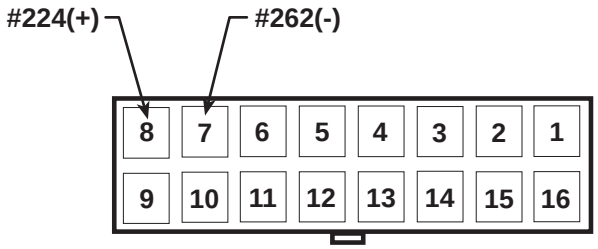

J30

5. Check the shutdown solenoid coil resistance from lead #224 (8J30) to lead #262 (7J30). The normal resistance is approximately 3 ohms. If the resistance is not correct, the coil or the diode that is in parallel with the coil may be faulty. See the Wiring Diagram. See Figure F.7.
6. Using the external 12VDC supply apply 12VDC to leads #224(+) and #262(-). See Figure F.7. **CORRECT POLARITY MUST BE OBSERVED OR DAMAGE TO THE INTERNAL DIODE MAY RESULT.** See the Wiring Diagram. The shutdown solenoid should activate when the 12VDC is applied. This can be detected by a “clicking” sound.
7. The solenoid should deactivate when the 12VDC is removed.
8. If the solenoid does not activate when the 12VDC is applied the solenoid or internal diode may be faulty. Replace.
9. Reconnect plug J30 and P30. Replace any cable ties previously removed.
10. Reassemble the right front case side and close the engine service access door.

Return to Section TOC
Return to Master TOC
Return to Section TOC
Return to Master TOC
Return to Section TOC
Return to Master TOC
Return to Section TOC
Return to Master TOC

NOTES

F-26

Return to Section TOC
Return to Master TOC
Return to Section TOC
Return to Master TOC
Return to Section TOC
Return to Master TOC
Return to Section TOC
Return to Master TOC

Return to Section TOC
Return to Master TOC
Return to Section TOC
Return to Master TOC
Return to Section TOC
Return to Master TOC
Return to Section TOC
Return to Master TOC

ENGINE THROTTLE ADJUSTMENT TEST

⚠ WARNING

Service and repair should be performed by only Lincoln Electric factory trained personnel. Unauthorized repairs performed on this equipment may result in danger to the technician or machine operator and will invalidate your factory warranty. For your safety and to avoid electrical shock, please observe all safety notes and precautions detailed throughout this manual.

If for any reason you do not understand the test procedures or are unable to perform the test/repairs safely, contact the Lincoln Electric Service Department for electrical troubleshooting assistance before you proceed. Call 1-888-935-3877.

TEST DESCRIPTION

If the machine output is low or high, this test will determine whether the engine is operating at the correct speed (RPM) during both HIGH and LOW idle conditions. Directions for adjusting the throttle to the correct RPM are given.

MATERIALS NEEDED

Slot head screw driver
3/8" wrench
7/16" wrench
10mm wrench
White or red marking pencil
Strobe-tach, frequency counter, or oscilloscope

This procedure should take approximately 35 minutes to perform.

ENGINE THROTTLE ADJUSTMENT TEST *(continued)*

FIGURE F.8 – STROBE MARK LOCATION

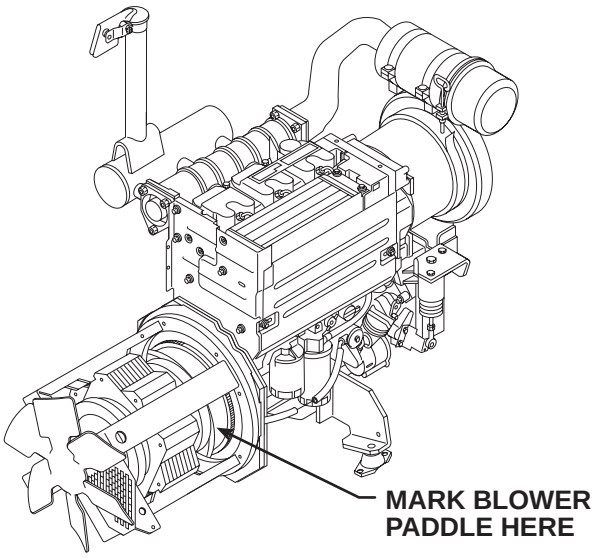

TEST PROCEDURE

1. Conduct this procedure with the engine OFF.
2. Unlatch, lift, and secure the right side service access door. With the 3/8" wrench, remove the right front side cover.
3. With a white or red marking pencil, place a mark on one of the blower paddles or on the side of the flywheel. See Figure F.8 for location.
4. Connect the strobe-tach according to the manufacturer's instructions.
5. Start the engine and direct the strobe-tach light on the blower paddle. Synchronize it to the rotating mark.

   With the machine at HIGH IDLE the tach should read between 1880 and 1910 RPM.

   With the machine at LOW IDLE the tach should read between 1350 and 1400 RPM.

Return to Section TOC
Return to Master TOC

ENGINE THROTTLE ADJUSTMENT TEST *(continued)*

FIGURE F.9 - HIGH IDLE ADJUSTMENT

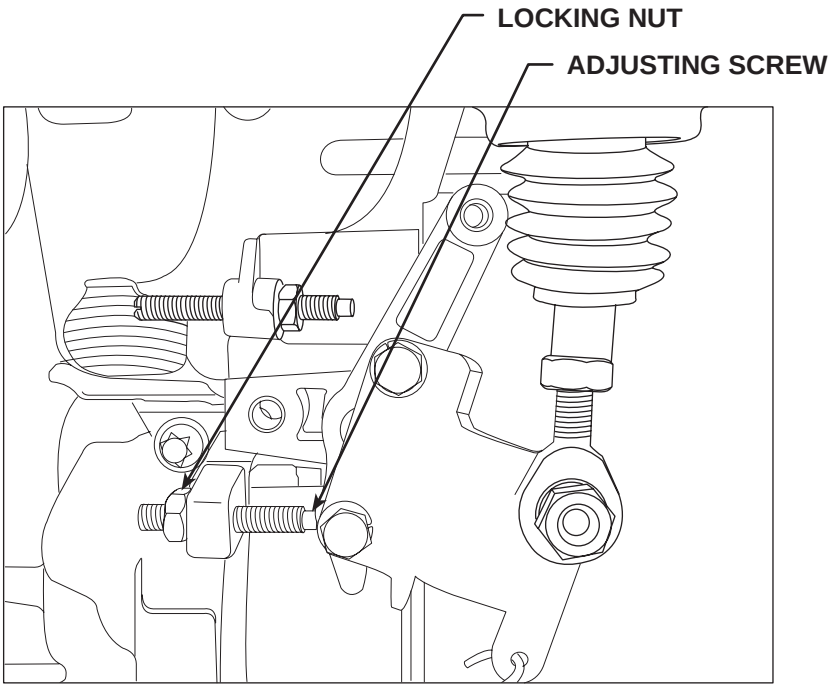

FIGURE F.10 - LOW IDLE ADJUSTMENT

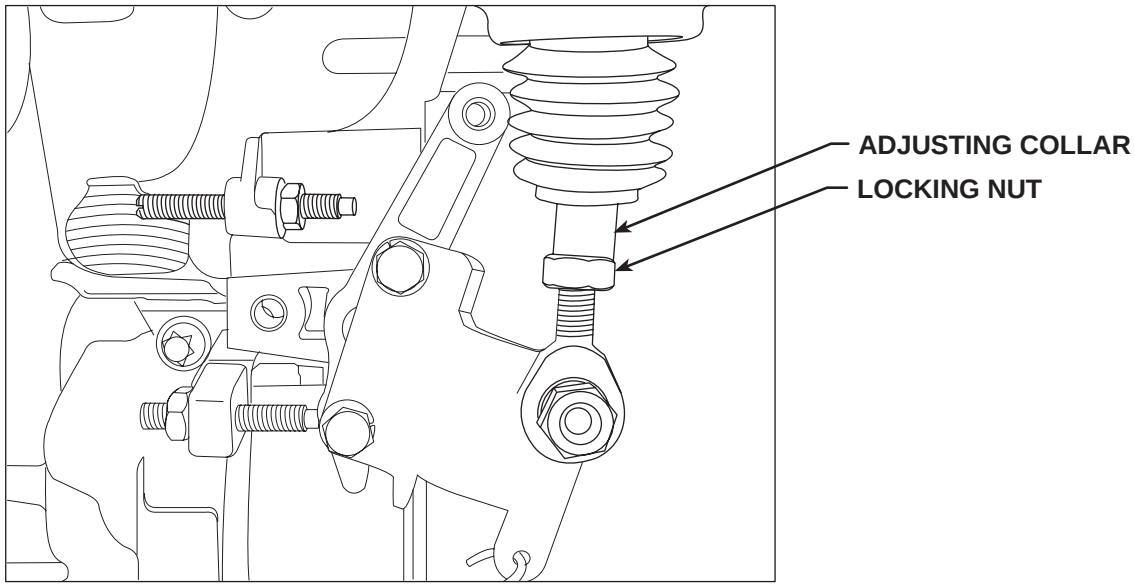

Return to Section TOC
Return to Master TOC
Return to Section TOC
Return to Master TOC
Return to Section TOC
Return to Master TOC
Return to Section TOC
Return to Master TOC

ENGINE THROTTLE ADJUSTMENT TEST *(continued)*

6. If either of the readings is incorrect, adjust the throttle as follows:

   Adjust HIGH IDLE: Use the 10mm wrench to loosen the locking nut. See ***Figure F.9*** for location of the adjusting screw and locking nut. Turn the threaded screw counter-clockwise to increase the HIGH IDLE speed. Adjust the speed until the tach reads between 1880 and 1910 RPM. Retighten the locking nut.

   Adjust LOW IDLE: First make sure there is no load on the machine. Set the IDLE switch to AUTO and wait for the engine to change to low idle speed. Use the 7/16" wrench to loosen the solenoid lever arm locking nut. See ***Figure F.10.*** Adjust the collar, to change the amount of throw in the lever arm, until the tach reads between 1350 and 1400 RPM. Retighten the locking nut.

Frequency Counter Method

1. Plug the frequency counter into one of the 115 VAC auxiliary receptacles.
2. Start the engine and check the frequency counter. At HIGH IDLE (1900 RPM), the counter should read 63 Hz. At LOW IDLE (1400 RPM), the counter should read 47 Hz. Note that these are median measurements; hertz readings may vary slightly above or below.
3. If either of the readings is incorrect, adjust the throttle as follows:

   Adjust HIGH IDLE: Use the 10mm wrench to loosen the locking nut. See ***Figure F.9*** for location of the adjusting screw and locking nut. Turn the threaded screw counter-clockwise to increase the HIGH IDLE speed. Adjust the speed until the frequency reads 63 Hz. Retighten the locking nut.

   Adjust LOW IDLE: First make sure there is no load on the machine. Set the IDLE switch to AUTO and wait for the engine to change to low idle speed. Use the 7/16" wrench to loosen the solenoid lever arm locking nut. See ***Figure F.10.*** Adjust the collar, to change the amount of throw in the lever arm, until the frequency reads 47 Hz. Retighten the locking nut.

Oscilloscope Method

1. Connect the oscilloscope to the 115 VAC receptacle, according to the manufacturer's instructions. At HIGH IDLE (1900 RPM), the waveform should exhibit a period of 15.8 milliseconds. At LOW IDLE (1400 RPM), the waveform should exhibit a period of 21.4 milliseconds. Refer to the ***NORMAL OPEN CIRCUIT VOLTAGE WAVEFORM (115 VAC AUXILIARY) HIGH IDLE - NO LOAD*** in this section of the manual.
2. If either waveform periods is incorrect, adjust the throttle as follows:

   Adjust HIGH IDLE: Use the 10mm wrench to loosen the locking nut. See ***Figure F.9*** for location of the adjusting screw and locking nut. Turn the threaded screw counter-clockwise to increase the HIGH IDLE speed. Adjust the speed until the period is 15.8 milliseconds. Retighten the locking nut.

   Adjust LOW IDLE: First make sure there is no load on the machine. Set the IDLE switch to AUTO and wait for the engine to change to low idle speed. Use the 7/16" wrench to loosen the solenoid lever arm locking nut. See ***Figure F.10.*** Adjust the collar, to change the amount of throw in the lever arm, until the period is 21.4 milliseconds. Retighten the locking nut.

Return to Section TOC
Return to Master TOC

Return to Section TOC
Return to Master TOC
Return to Section TOC
Return to Master TOC
Return to Section TOC
Return to Master TOC
Return to Section TOC
Return to Master TOC

ROTOR RESISTANCE TEST

⚠ WARNING

Service and repair should be performed by only Lincoln Electric factory trained personnel. Unauthorized repairs performed on this equipment may result in danger to the technician or machine operator and will invalidate your factory warranty. For your safety and to avoid electrical shock, please observe all safety notes and precautions detailed throughout this manual.

If for any reason you do not understand the test procedures or are unable to perform the test/repairs safely, contact the Lincoln Electric Service Department for electrical troubleshooting assistance before you proceed. Call 1-888-935-3877.

TEST DESCRIPTION

This test will determine if there is a shorted winding in the rotor or if the rotor is grounded.

MATERIALS NEEDED

Ohmmeter
3/8" wrench
Needle nose pliers

This procedure should take approximately 15 minutes to perform.

Return to Section TOC
Return to Master TOC

ROTOR RESISTANCE TEST *(continued)*

FIGURE F.11 – ROTOR BRUSH LEADS

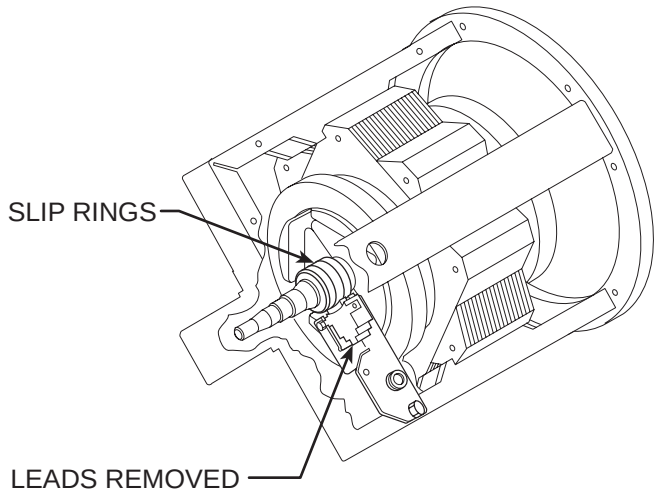

TEST PROCEDURE

1 Conduct this test with the engine off.

2. Using the 3/8" wrench, remove the left front case side.

3. Locate, label and remove the three leads from the rotor brush holder assembly. See Figure 11. This will electrically isolate the rotor windings.

4. Using the ohmmeter, check the rotor winding resistance across the slip rings. Normal resistance is approximately 23.5 ohms.

5. Measure the resistance to ground. Place one meter probe on either of the slip rings. Place the other probe on any good unpainted ground. The resistance should be very high, at least 500,000 ohms.

6. If the test does not meet the resistance specifications, then the rotor may be faulty. Replace.

7. Connect the leads previously removed from the brush assembly. Make sure the leads are connected to the proper brushes.

8. Replace the left front case cover previously removed.

Return to Section TOC
Return to Master TOC
Return to Section TOC
Return to Master TOC
Return to Section TOC
Return to Master TOC
Return to Section TOC
Return to Master TOC

FLASHING AND ROTOR VOLTAGE TEST

⚠ WARNING

Service and repair should be performed by only Lincoln Electric factory trained personnel. Unauthorized repairs performed on this equipment may result in danger to the technician or machine operator and will invalidate your factory warranty. For your safety and to avoid electrical shock, please observe all safety notes and precautions detailed throughout this manual.

If for any reason you do not understand the test procedures or are unable to perform the test/repairs safely, contact the Lincoln Electric Service Department for electrical troubleshooting assistance before you proceed. Call 1-888-935-3877.

TEST DESCRIPTION

This test will determine if the correct DC voltage is being applied to the rotor at the maximum engine speed (1900 RPM). This information will aid the technician in determining if the generator field is operating properly.

MATERIALS NEEDED

Volt/Ohmmeter
3/8" Wrench
Wiring Diagram

This procedure should take approximately 20 minutes to perform.

FLASHING AND ROTOR VOLTAGE TEST *(continued)*

FIGURE F.12 – ROTOR BRUSH LEADS

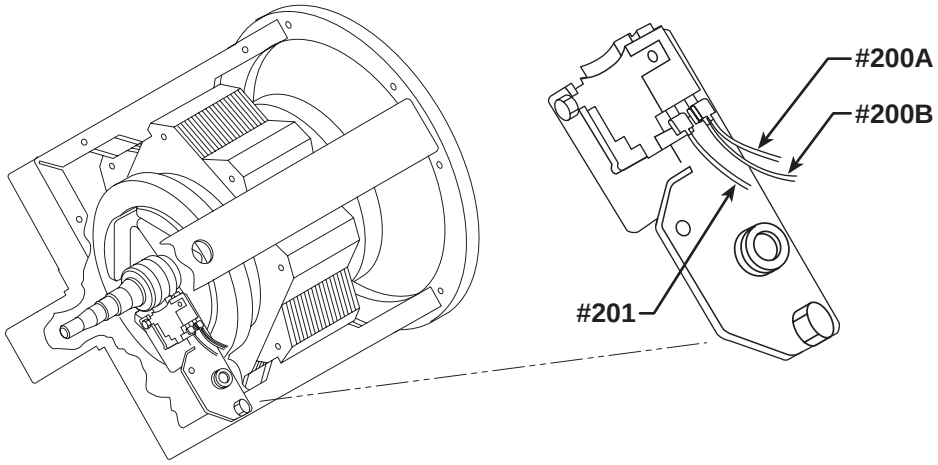

TEST PROCEDURE

1. Using the 3/8" wrench, remove the sheet metal screws from the left front case side.
2. Carefully remove the left case side.
3. Set the volt/ohmmeter to the DC volts position.
4. Connect the positive meter probe to the brush nearest the rotor lamination (leads #200A and #200B). See Figure F.12.for location.
5. Connect the negative meter probe to the other brush (lead #201).
6. Start the engine and run it at high idle speed (1900 RPM). Check the voltage reading on the meter. It should read approximately 160VDC.

Return to Section TOC
Return to Master TOC

FLASHING AND ROTOR VOLTAGE TEST *(continued)*

FIGURE F.13 - FIELD DIODE RECTIFIER BRIDGE AND FILTER CAPACITOR

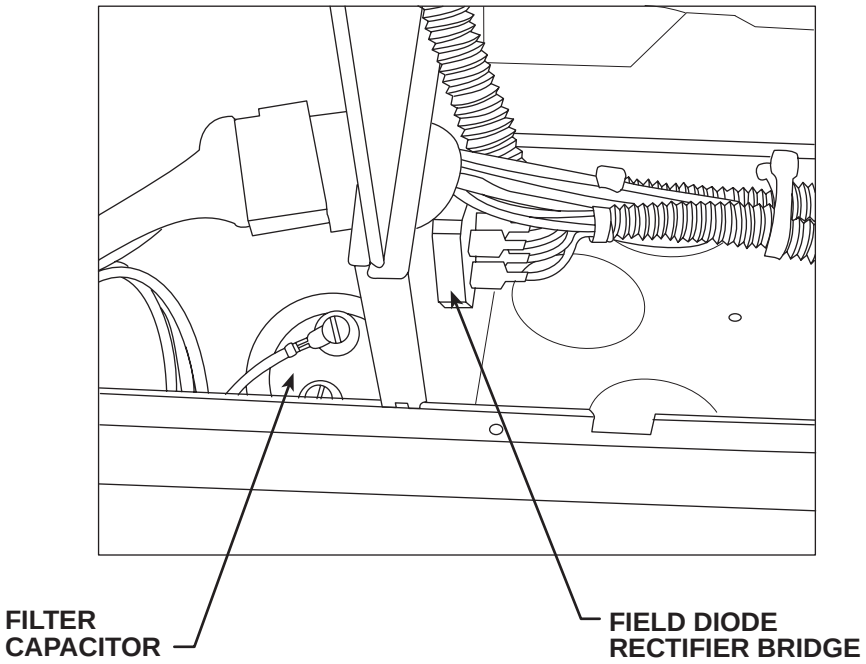

7. If the voltage reading is low or not present, the generator field is not functioning properly. Perform the ***Rotor Resistance Test.*** Also check the field diode rectifier bridge, filter capacitor, and associated leads and connections. See Figure F.13 for location. See the Wiring Diagram.

NOTE: The normal flashing voltage is approximately 9VDC. This is battery voltage, which is processed and controlled through the engine protection board. This voltage must be present during start-up to “flash” the rotor field.

8. If the rotor voltage readings are normal, the field circuit is functioning properly. Install the left case side with the sheet metal screws previously removed.

Return to Section TOC
Return to Master TOC

F-36

NOTES

Return to Section TOC
Return to Master TOC
Return to Section TOC
Return to Master TOC
Return to Section TOC
Return to Master TOC
Return to Section TOC
Return to Master TOC

Return to Section TOC
Return to Master TOC
Return to Section TOC
Return to Master TOC
Return to Section TOC
Return to Master TOC
Return to Section TOC
Return to Master TOC

STATOR VOLTAGE TEST

⚠ WARNING

Service and repair should be performed by only Lincoln Electric factory trained personnel. Unauthorized repairs performed on this equipment may result in danger to the technician or machine operator and will invalidate your factory warranty. For your safety and to avoid electrical shock, please observe all safety notes and precautions detailed throughout this manual.

If for any reason you do not understand the test procedures or are unable to perform the test/repairs safely, contact the Lincoln Electric Service Department for electrical troubleshooting assistance before you proceed. Call 1-888-935-3877.

TEST DESCRIPTION

This test will determine if the correct AC voltages are being generated from the stator windings.

MATERIALS NEEDED

Volt/Ohmmeter
3/8" wrench
3/4" wrench

This procedure should take approximately 40 minutes to perform.

STATOR VOLTAGE TEST *(continued)*

FIGURE F.14 – FRONT CONTROL PANEL REMOVAL

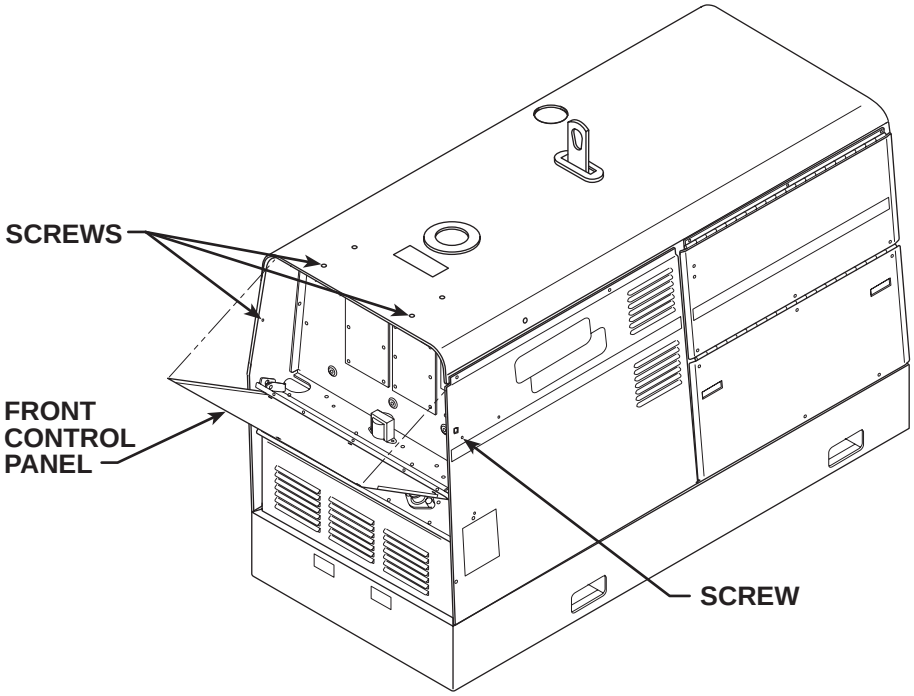

TEST PROCEDURE

1. Turn the engine off.
2. Using the 3/8" wrench, remove the four screws holding the front control panel to the case top and sides. See Figure F.14. (There are two screws on the top and one screw on each side.)
3. Carefully lower the front control panel.
4. Using the 3/8" wrench, remove the front left and right side panels.
5. Using the 3/4" wrench, remove the internal leads from the output terminals. Insulate the leads.

Return to Section TOC
Return to Master TOC

STATOR VOLTAGE TEST *(continued)*

FIGURE F.15 – OUTPUT PANEL REMOVAL

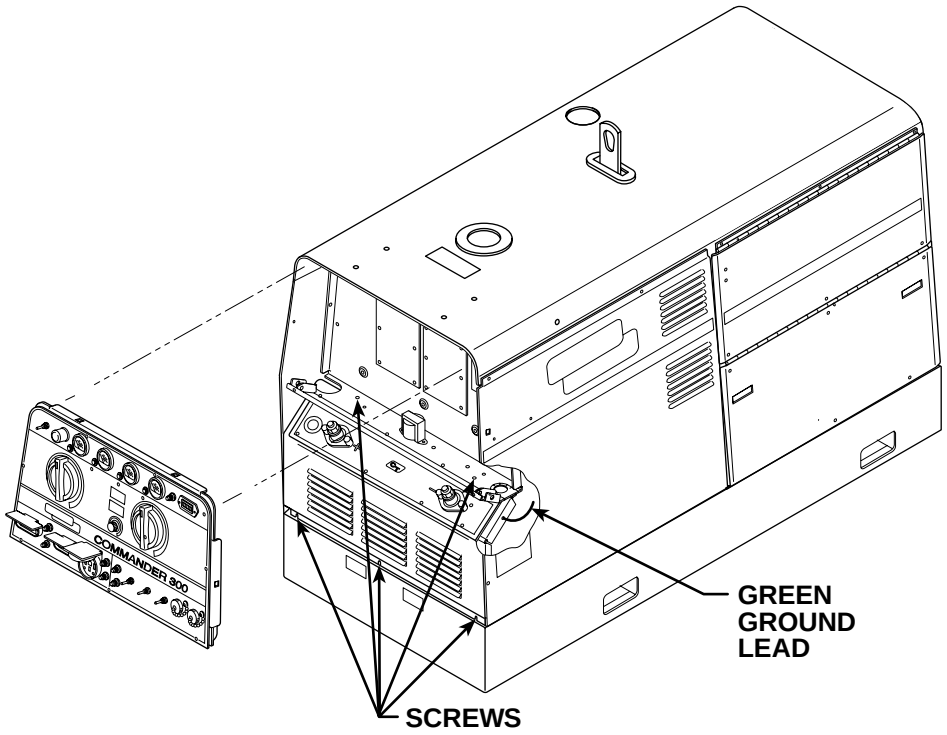

6. Using the 3/8” wrench, remove the five screws holding the lower front panel (output panel) to the case front assembly. See Figure F.15. Carefully move the lower front panel to the right side. Note the green ground lead will still be attached.

Return to Section TOC
Return to Master TOC

STATOR VOLTAGE TEST *(continued)*

FIGURE F.16 – AUXILIARY LEAD TEST LOCATION

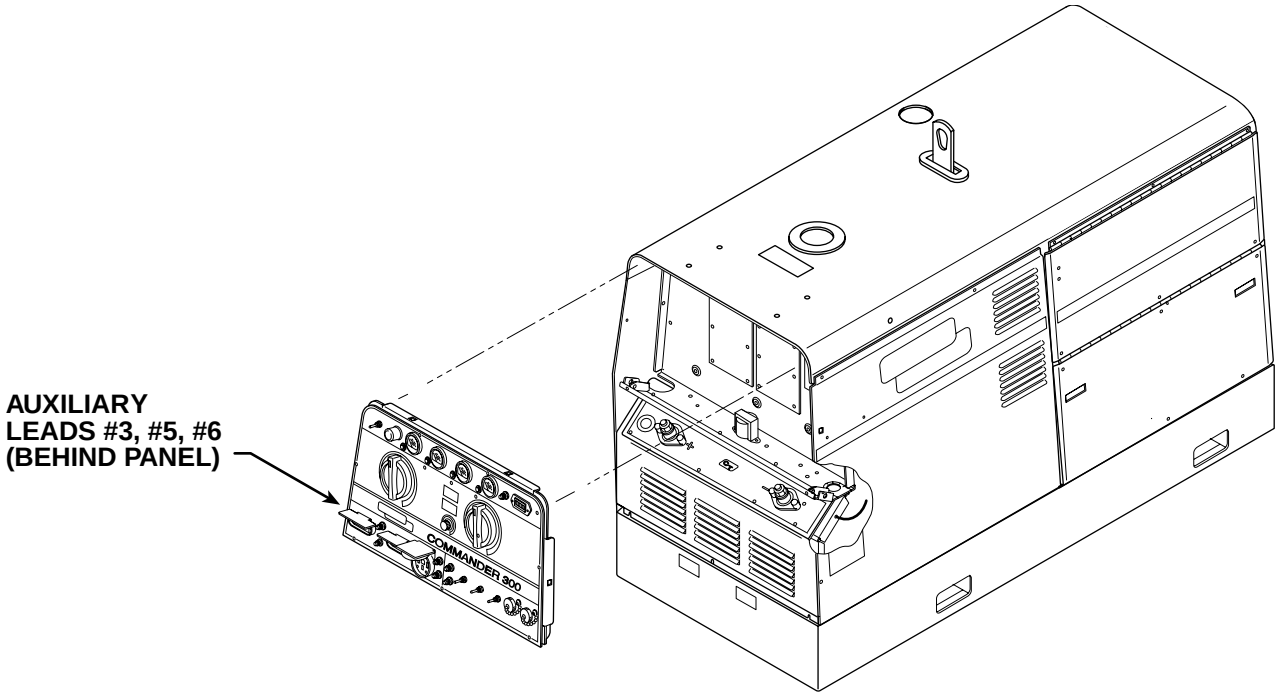

AUXILIARY POWER AND WELD WINDINGS TEST

1. Start the engine and run at high idle (1900 RPM). Do not load welding or auxiliary power.
2. Check for 115-132VAC at leads #3 to #5. Also check for 115-132VAC from leads #6 to #5. See the Wiring Diagram.
3. Check for 230 to 264VAC at leads #3 to #6. See the Wiring Diagram.

Return to Section TOC
Return to Master TOC

STATOR VOLTAGE TEST *(continued)*

FIGURE F.17 – OUTPUT RECTIFIER DIODE BRIDGE

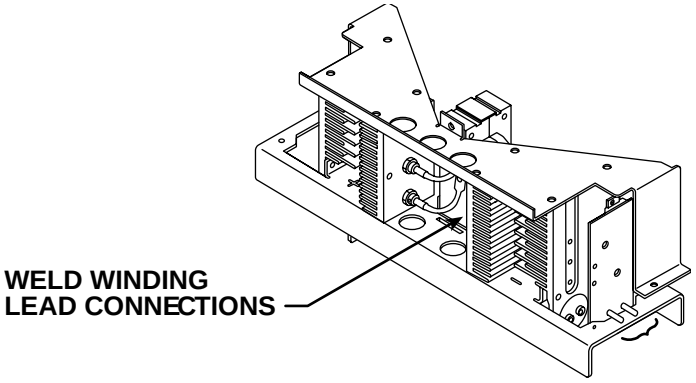

4. Locate the weld winding leads connected to the three-phase output rectifier diode bridge. See Figure F.17.
5. Check for approximately 68VAC from W1 to W2. Also check from W2 to W3 and from W1 to W3.
6. If any of these voltages are low or missing perform the ***Rotor Flashing*** and ***Voltage Test*** and also the ***Rotor Resistance Test.***
7. Also check leads #6H and #5P for loose or faulty connections to the field bridge. See the Wiring Diagram.
8. If the tests in Steps 6 and 7 are OK and the stator voltages are low or missing, the stator may be faulty.
9. Replace the lower front panel and output leads.
10. Replace the upper control panel and secure.
11. Replace the front left and right case sides.

Return to Section TOC
Return to Master TOC
Return to Section TOC
Return to Master TOC
Return to Section TOC
Return to Master TOC
Return to Section TOC
Return to Master TOC

NOTES

F-42

Return to Section TOC
Return to Master TOC
Return to Section TOC
Return to Master TOC
Return to Section TOC
Return to Master TOC
Return to Section TOC
Return to Master TOC

Return to Section TOC
Return to Master TOC

RF BY-PASS BOARD RESISTANCE TEST

⚠ WARNING

Service and repair should be performed by only Lincoln Electric factory trained personnel. Unauthorized repairs performed on this equipment may result in danger to the technician or machine operator and will invalidate your factory warranty. For your safety and to avoid electrical shock, please observe all safety notes and precautions detailed throughout this manual.

If for any reason you do not understand the test procedures or are unable to perform the test/repairs safely, contact the Lincoln Electric Service Department for electrical troubleshooting assistance before you proceed. Call 1-888-935-3877.

TEST DESCRIPTION

This test will determine if the inductor filters on the RF By-Pass Board are intact and capable of passing signal information.

MATERIALS NEEDED

Volt/Ohmmeter
3/8" Nut driver
Phillips head screwdriver

This procedure should take approximately 25 minutes to perform.

RF BY-PASS BOARD RESISTANCE TEST *(continued)*

FIGURE F.18 – FRONT CONTROL PANEL REMOVAL

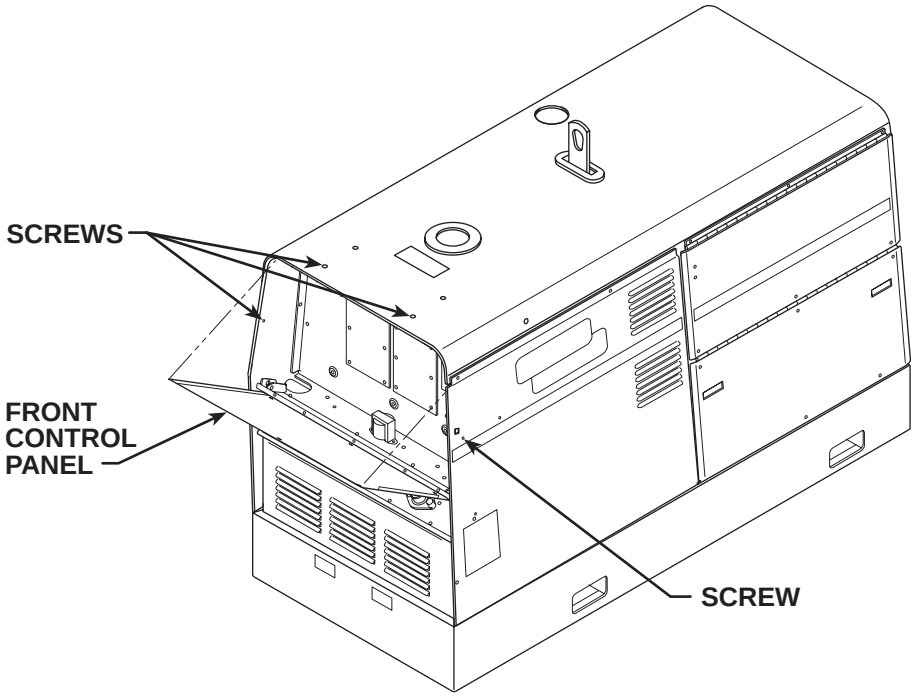

TEST PROCEDURE

1. Turn the engine off.
2. Using the 3/8" wrench, remove the four screws holding the front control panel to the case top and sides. See Figure F.18. (There are two screws on the top and one screw on each side.)
3. Carefully lower the front control panel.

Return to Section TOC
Return to Master TOC

RF BY-PASS BOARD RESISTANCE TEST *(continued)*

FIGURE F.19 – RF BY-PASS BOARD

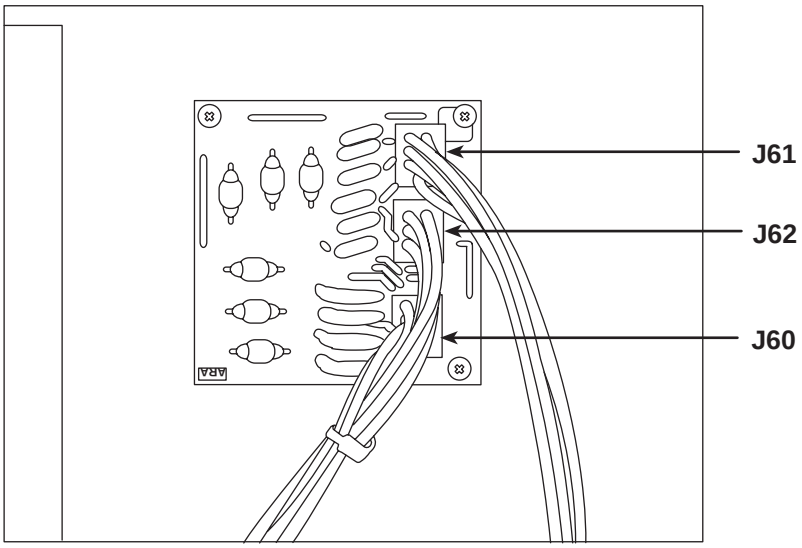

4. Locate, label, and remove the three plugs from the RF By-Pass board. See Figure 19.
5. Using the phillips head screwdriver, remove the three mounting screws from the board.

NOTE: Take note of the screw and washer placement for reassembly.

6. Using the ohmmeter, check for the correct resistance readings per ***Table F.1***. If any of the checks are not correct, the RF By-Pass Board may be faulty.
7. Replace the board making sure the mounting screws and washers are in place and tight.
8. Install the three plugs into the board.
9. Replace the front control panel.

Return to Section TOC
Return to Master TOC

Return to Section TOC
Return to Master TOC
Return to Section TOC
Return to Master TOC
Return to Section TOC
Return to Master TOC

TABLE F.1.
RF BY-PASS RESISTANCE TABLE

CHECK POINTS	COMPONENT BEING CHECKED	MAXIMUM ALLOWABLE RESISTANCE
1J61 to 5J60	L4 and Board Trace	**4.2 OHMS (3.5 Typical)**
1J61 to 5J62	L4 and Board Trace	**4.2 OHMS (3.5 Typical)**
2J61 to 4J60	L5 and Board Trace	**4.2 OHMS (3.5 Typical)**
2J61 to 4J62	L5 and Board Trace	**4.2 OHMS (3.5 Typical)**
3J61 to 1J60	L1 and Board Trace	**4.2 OHMS (3.5 Typical)**
3J61 to 1J62	L1 and Board Trace	**4.2 OHMS (3.5 Typical)**
4J61 to 2J60	L2 and Board Trace	**4.2 OHMS (3.5 Typical)**
4J61 to 2J62	L2 and Board Trace	**4.2 OHMS (3.5 Typical)**
5J61 to 6J60	L6 and Board Trace	**4.2 OHMS (3.5 Typical)**
5J61 to 6J62	L6 and Board Trace	**4.2 OHMS (3.5 Typical)**
8J61 to 3J60	L3 and Board Trace	**4.2 OHMS (3.5 Typical)**
8J61 to 3J62	L3 and Board Trace	**4.2 OHMS (3.5 Typical)**

NOTE: The pins should not have continuity to the PC board ground plane. See M18948 schematic.

Return to Section TOC
Return to Master TOC
Return to Section TOC
Return to Master TOC
Return to Section TOC
Return to Master TOC
Return to Section TOC
Return to Master TOC

CONTROL TRANSFORMER TEST

⚠ WARNING

Service and repair should be performed by only Lincoln Electric factory trained personnel. Unauthorized repairs performed on this equipment may result in danger to the technician or machine operator and will invalidate your factory warranty. For your safety and to avoid electrical shock, please observe all safety notes and precautions detailed throughout this manual.

If for any reason you do not understand the test procedures or are unable to perform the test/repairs safely, contact the Lincoln Electric Service Department for electrical troubleshooting assistance before you proceed. Call 1-888-935-3877.

TEST DESCRIPTION

This test will determine that if the correct voltage (115VAC) is applied to the primary of the control transformer, the correct voltages are induced on the secondary windings of the transformer.

MATERIALS NEEDED

Volt/Ohmmeter
Wiring diagram
Isolated 115VAC supply
3/8" wrench

This procedure should take approximately 20 minutes to perform.

CONTROL TRANSFORMER TEST *(continued)*

FIGURE F.20 – FRONT CONTROL PANEL REMOVAL

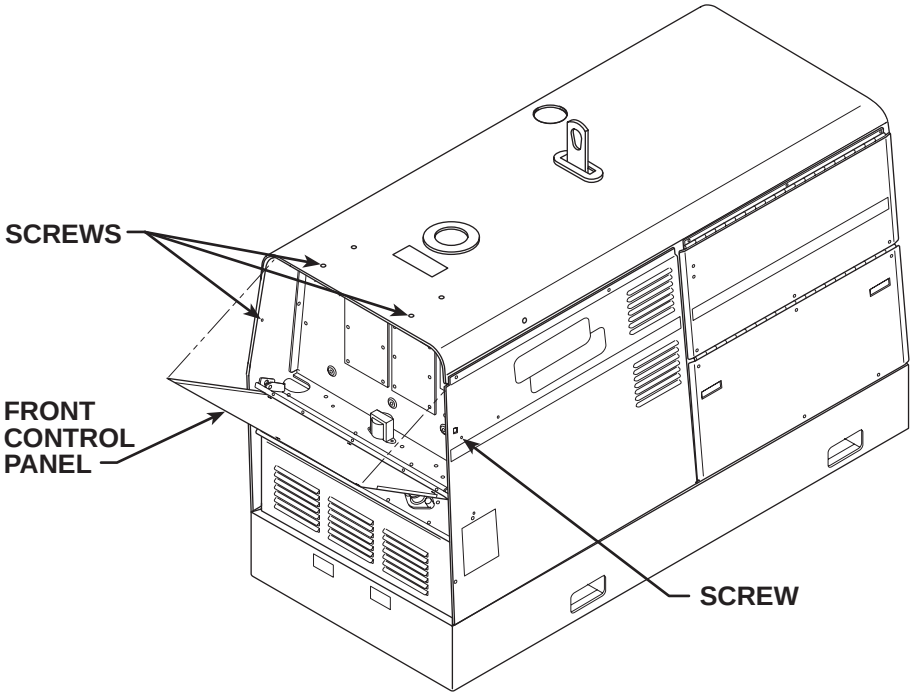

TEST PROCEDURE

1. This test should be performed with the engine off.
2. Using the 3/8" wrench, remove the four screws holding the front control panel to the case top and sides. See Figure F.20. (There are two screws on the top and one on each side.)
3. Carefully lower the front control panel.

Return to Section TOC
Return to Master TOC

CONTROL TRANSFORMER TEST *(continued)*

FIGURE F.21 – PLUG J16 DETAILS

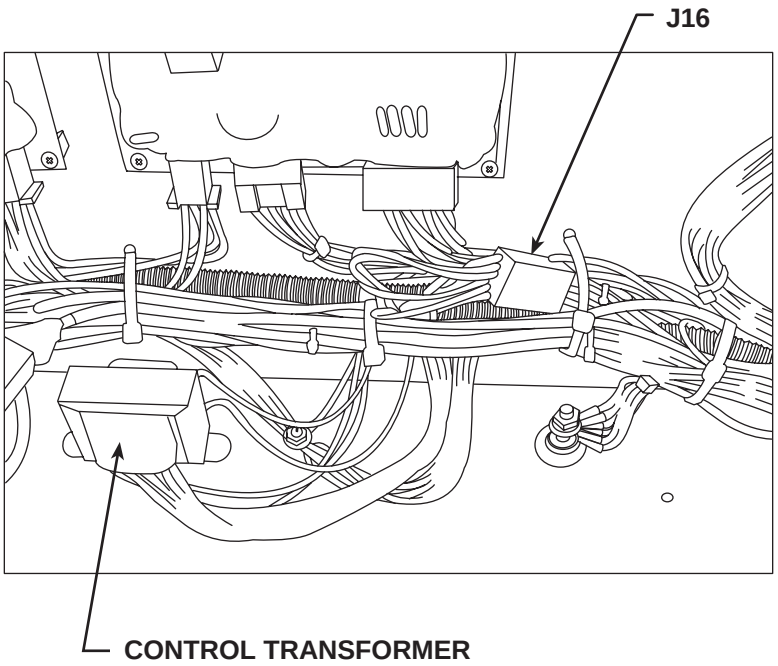

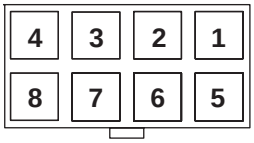

J16

4. Locate and disconnect plug J16 from P16. See the Wiring Diagram and Figure 21.
5. Using the isolated supply, carefully apply 115VAC to the black (primary) leads at plug J16 pins 7 and 8.
6. Carefully check for approximately 42VAC at the red (secondary) leads at plug J16 pins 3 and 4.
7. Carefully check for approximately 30VAC at the yellow (secondary) leads plug J16 pins 1 and 2.
8. Carefully check for approximately 30VAC at the brown (secondary) leads plug J16 pins 5 and 6.
9. If any of the secondary voltages are missing or low the control transformer may be faulty. Also check the leads at the plug for loose or faulty connections.
10. Reconnect plugs J16 to P16.
11. Replace the front control panel and secure with the screws previously removed.

Return to Section TOC
Return to Master TOC

F-50

NOTES

Return to Section TOC
Return to Master TOC
Return to Section TOC
Return to Master TOC
Return to Section TOC
Return to Master TOC
Return to Section TOC
Return to Master TOC

Return to Section TOC
Return to Master TOC
Return to Section TOC
Return to Master TOC
Return to Section TOC
Return to Master TOC
Return to Section TOC
Return to Master TOC

OUTPUT RECTIFIER BRIDGE TEST

⚠ WARNING

Service and repair should be performed by only Lincoln Electric factory trained personnel. Unauthorized repairs performed on this equipment may result in danger to the technician or machine operator and will invalidate your factory warranty. For your safety and to avoid electrical shock, please observe all safety notes and precautions detailed throughout this manual.

If for any reason you do not understand the test procedures or are unable to perform the test/repairs safely, contact the Lincoln Electric Service Department for electrical troubleshooting assistance before you proceed. Call 1-888-935-3877.

TEST DESCRIPTION

This test will determine if there are faulty diodes in the output rectifier bridge.

MATERIALS NEEDED

Volt/Ohmmeter (diode tester)
1/2" wrench
3/8" wrench
Wiring diagram

This procedure should take approximately 40 minutes to perform.

Return to Section TOC
Return to Master TOC

OUTPUT RECTIFIER BRIDGE TEST *(continued)*

FIGURE F.22 – FRONT CONTROL PANEL REMOVAL

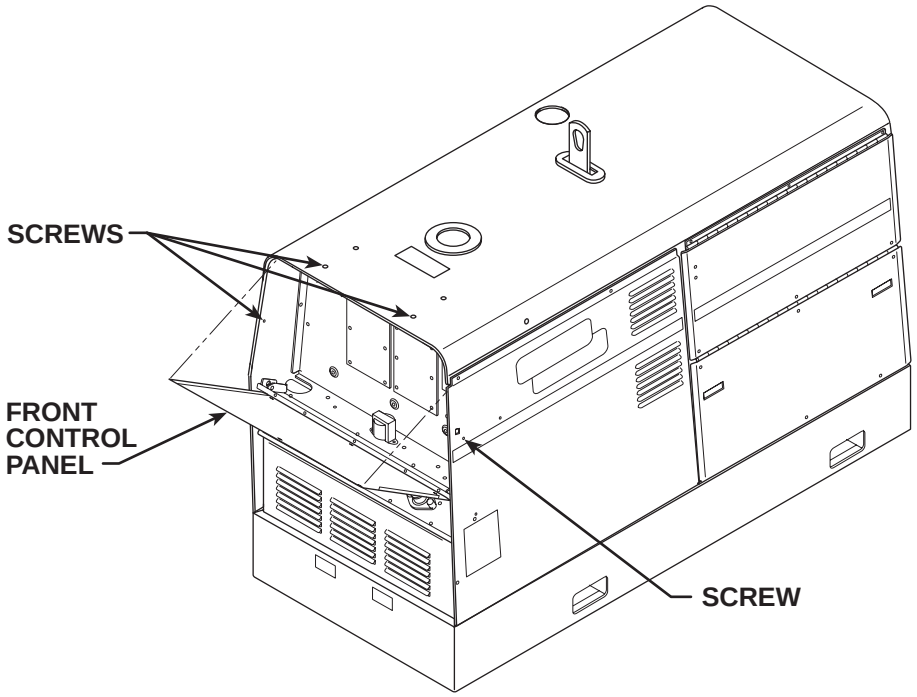

TEST PROCEDURE

1. Turn the engine off.
2. Using the 3/8" wrench remove the screws holding the front control panel to the case top and sides. See Figure F.22. (There are two screws on the top and one screw on each side.)
3. Carefully lower the front control panel.
4. Using the 3/8" wrench, remove the front left and right side panels.
5. Perform the ***Power Module Capacitor Discharge Procedure.***
6. Using the 3/4" wrench, remove the internal leads from the output terminals. Insulate the leads.

OUTPUT RECTIFIER BRIDGE TEST *(continued)*

FIGURE F.23 – OUTPUT PANEL REMOVAL

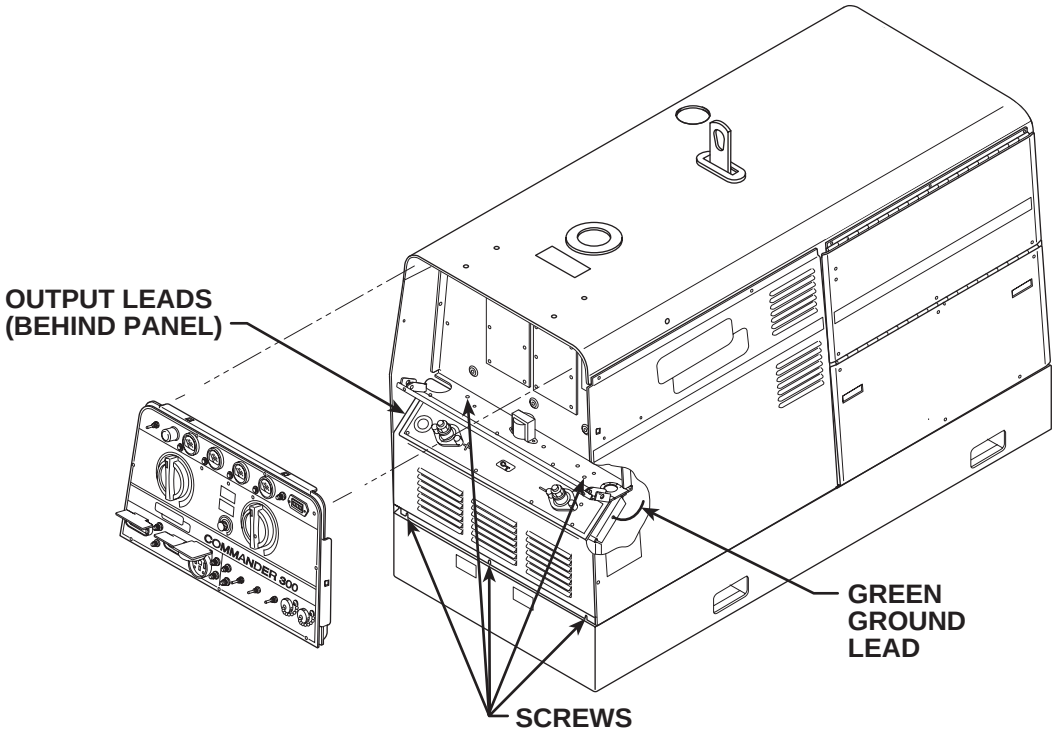

7. Using the 3/8" wrench, remove the five screws holding the lower front panel to the case front assembly. See Figure F.23. Carefully move the lower front panel to the right side. Note that he green ground lead will still be attached.

8. Using the 7/16" wrench, remove the stator leads and diode pigtail leads from the three studs. Label the leads for reassembly. Note leads and pigtail placement for reassembly. See ***Figure F.24.***

Return to Section TOC
Return to Master TOC

OUTPUT RECTIFIER BRIDGE TEST *(continued)*

FIGURE F.24 – DIODE LEAD REMOVAL

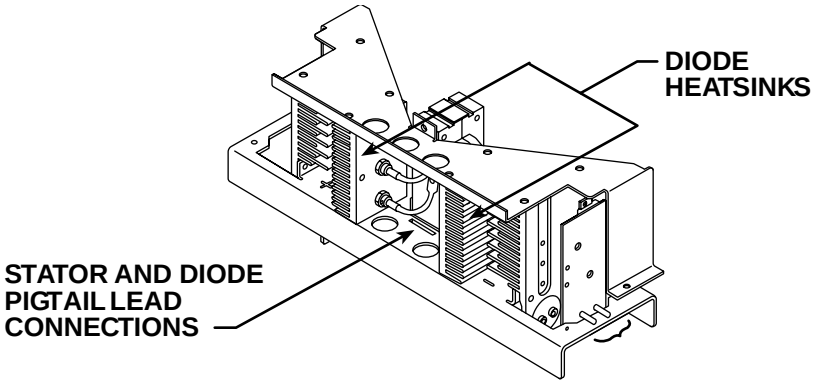

9. Electrically isolate the six diode pigtail leads by carefully bending them out into “free air.”
10. With an ohmmeter or diode tester, check each of the six diodes from their pigtails to their respective heat sinks.
11. Reverse the tester leads and check the diodes again. Diodes should have a low resistance in one polarity and a very high resistance in the opposite polarity
12. Replace any “shorted” or “open” diode as the tests indicate. See the ***Diode Removal and Replacement Procedure.***
13. Replace the pigtails and stator leads onto the correct studs. Assemble the washers and nuts.
14. Replace the lower front panel and output leads.
15. Replace the upper control panel and secure.
16. Replace the front left and right case sides.

Return to Section TOC
Return to Master TOC

Return to Section TOC
Return to Master TOC
Return to Section TOC
Return to Master TOC
Return to Section TOC
Return to Master TOC
Return to Section TOC
Return to Master TOC

POWER MODULE TEST

⚠ WARNING

Service and repair should be performed by only Lincoln Electric factory trained personnel. Unauthorized repairs performed on this equipment may result in danger to the technician or machine operator and will invalidate your factory warranty. For your safety and to avoid electrical shock, please observe all safety notes and precautions detailed throughout this manual.

If for any reason you do not understand the test procedures or are unable to perform the test/repairs safely, contact the Lincoln Electric Service Department for electrical troubleshooting assistance before you proceed. Call 1-888-935-3877.

TEST DESCRIPTION

This test will help determine if the power modules are shorted. This is a resistance test, not a voltage test. This test will only help diagnose a problem in the “power” section of the module. Other PC board components could be faulty.

MATERIALS NEEDED

Volt/Ohmmeter (analog)
3/8" wrench
7/16" wrench

This procedure should take approximately 45 minutes to perform.

POWER MODULE TEST *(continued)*

FIGURE F.25 – POWER MODULE CAPACITOR LEADS

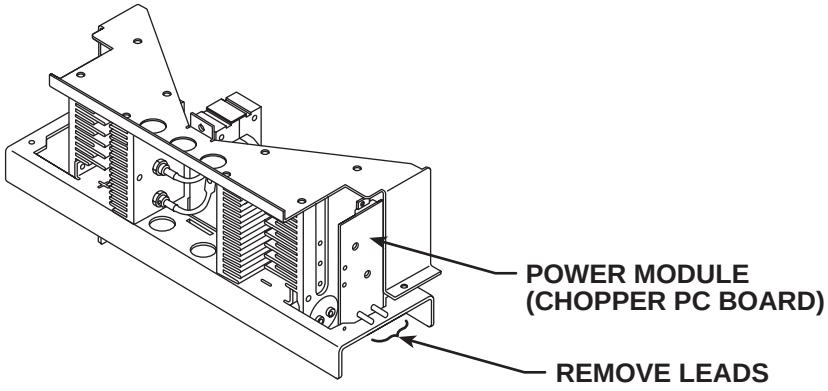

TEST PROCEDURE

1. This procedure must be performed with the engine off.
2. Remove the left and right case sides.
3. Perform the ***Power Module Capacitor Discharge Procedure.***
4. Using the 7/16" wrench, remove the positive and negative strap leads from the power module capacitor terminals. See Figure F.25. Remove the leads from both the left and right side modules.

NOTE: The left side module will also have the bleeder resistor leads attached. Label and remove them also.

Return to Section TOC
Return to Master TOC

POWER MODULE TEST *(continued)*

FIGURE F.26 – IGBT TEST

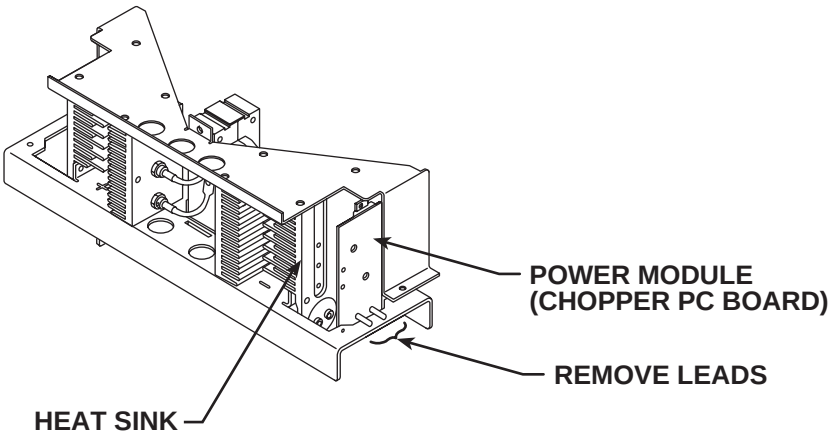

CHECK IGBT FOR "SHORTS"

5. Using the analog ohmmeter, connect the positive meter probe to the heat sink and the negative meter probe to the positive capacitor terminal **on the chopper PC board.** See Figure F.26. The resistance reading should be very high (over 20,000 ohms).
6. Reverse the meter probe leads. The resistance should be very high (over 20,000 ohms). It the resistance is low in either Step 5 or 6, the IGBT may be shorted or leaky.
7. Repeat Steps 4 and 5 for the other module.

Return to Section TOC
Return to Master TOC

POWER MODULE TEST *(continued)*

FIGURE F.27 – DIODE MODULE TEST

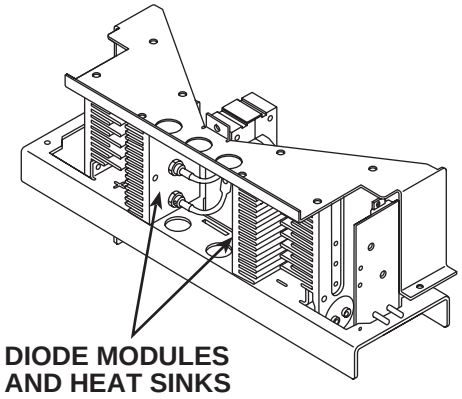

CHECK DIODE MODULE

8. Using the analog ohmmeter, connect the negative meter probe to the terminal on the diode module. See Figure F.27. Connect the positive meter probe to the heat sink. The resistance should be very high (over 20,000 ohms).
9. Using the analog ohmmeter, connect the positive meter probe to the terminal on the diode module. See Figure F.27. Connect the negative meter probe to the heat sink. The resistance should be low (approximately 1000 ohms).
10. Reconnect all leads and sheet metal previously removed.
11. Torque the capacitor nuts to 50-60 inch-pounds.

Return to Section TOC
Return to Master TOC

Return to Section TOC
Return to Master TOC
Return to Section TOC
Return to Master TOC
Return to Section TOC
Return to Master TOC
Return to Section TOC
Return to Master TOC

CURRENT BALANCE TEST

⚠ WARNING

Service and repair should be performed by only Lincoln Electric factory trained personnel. Unauthorized repairs performed on this equipment may result in danger to the technician or machine operator and will invalidate your factory warranty. For your safety and to avoid electrical shock, please observe all safety notes and precautions detailed throughout this manual.

If for any reason you do not understand the test procedures or are unable to perform the test/repairs safely, contact the Lincoln Electric Service Department for electrical troubleshooting assistance before you proceed. Call 1-888-935-3877.

DESCRIPTION

This test will determine if there is a balance current between the IGBT modules and can also eliminate intermittent lack of output problems. This test to be performed on machine codes 10469 and 10470 only.

MATERIALS NEEDED

3/8" Wrench
5/16” Nut Driver
Wire Cutters

This procedure should take approximately 30 minutes to perform.

CURRENT BALANCE TEST *(continued)*

TEST PROCEDURE

1. Turn the engine off.
2. Perform the ***Case Cover Removal Procedure*** and tilt the control panel out.
3. Locate plug J3 at the control board and P15 in the main harness. ***See Figure F.29.***
4. Disconnect P15.

⚠ WARNING

ELECTRIC SHOCK CAN KILL.



- Do not touch electrically live parts such as output terminals or internal wiring.
- Insulate yourself from the work and ground.
- Always wear dry insulating gloves.

5. Start the machine.
6. In CC mode, load the machine on a load grid to 375 amps at 34 VDC.
7. Immediately after applying the load, use a voltmeter to measure (one at a time) the voltage from each chopper heat sink to the positive weld stud. Each voltage measurement should be .75-1.3 VDC and both measurements must be within .1VDC of each other.
8. A voltage out of spec indicates a possible blown IGBT chopper module and the chopper boards must be replaced. Replace both chopper boards using the **POWER MODULE (CHOPPER) PC BOARD REMOVAL AND REPLACEMENT PROCEDURE.**
9. A voltage within spec indicates that the chopper modules are sharing weld current relatively equal and the chopper boards are ok.
10. Remove the load and turn off the engine.
11. Disconnect J3 at the control board. ***See Figure F.29.***
12. Using a pair of wire cutters, cut leads 68 and 69 from the #3 and #4 cavities of plug J3. Butt tape and insulate loose ends. See Figure F.28.

NOTE: Cutting and removing these leads will help to eliminate intermittent lack of output problems.

13. Plug J3 back into the control board.
14. Using the ***CASE COVER REMOVAL AND REPLACEMENT PROCEDURE***, install the control panel and side panels on the machine.

FIGURE - F.28 PLUG J3

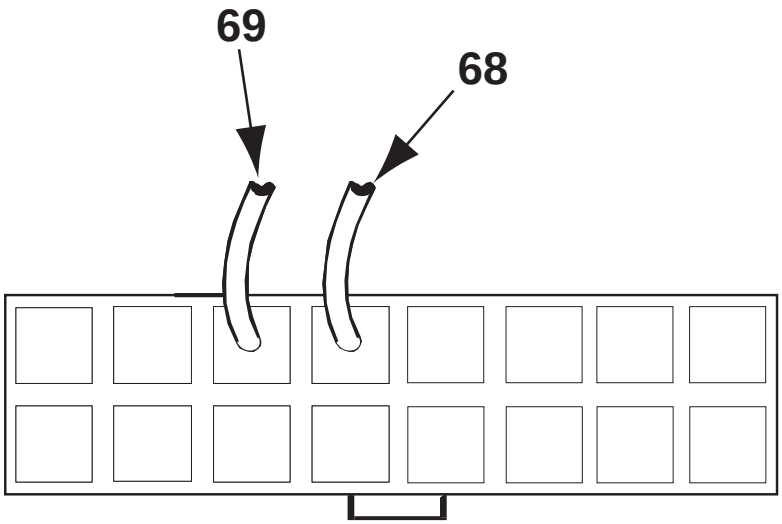

Plug J3

Return to Section TOC
Return to Master TOC
Return to Section TOC
Return to Master TOC
Return to Section TOC
Return to Master TOC
Return to Section TOC
Return to Master TOC

CURRENT BALANCE TEST *(continued)*

FIGURE F.29 – PLUG LOCATIONS

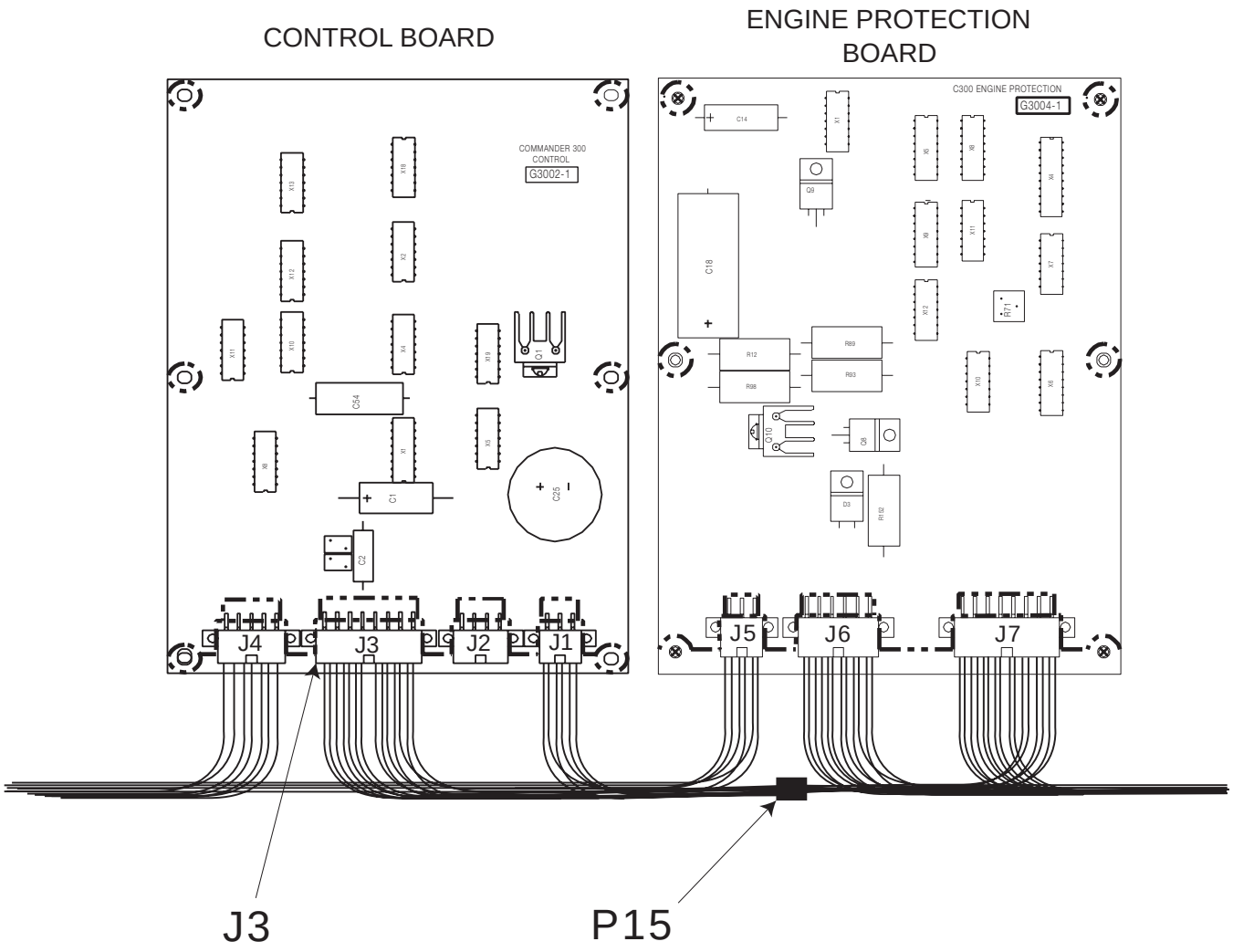

NOTES

F-62

Return to Section TOC
Return to Master TOC
Return to Section TOC
Return to Master TOC
Return to Section TOC
Return to Master TOC
Return to Section TOC
Return to Master TOC

Return to Section TOC
Return to Master TOC

CONTROL INPUT TEST

⚠ WARNING

Service and repair should be performed by only Lincoln Electric factory trained personnel. Unauthorized repairs performed on this equipment may result in danger to the technician or machine operator and will invalidate your factory warranty. For your safety and to avoid electrical shock, please observe all safety notes and precautions detailed throughout this manual.

If for any reason you do not understand the test procedures or are unable to perform the test/repairs safely, contact the Lincoln Electric Service Department for electrical troubleshooting assistance before you proceed. Call 1-888-935-3877.

DESCRIPTION

This test will determine if the Range Selector Switch, Control dial, Arc Force dial, and circuits on the control board that interface with these weld control components are functioning properly.

MATERIALS NEEDED

3/8" Wrench
5/16” Nut Driver
Multi-meter

This procedure should take approximately 60 minutes to perform.

CONTROL INPUT TEST *(continued)*

FIGURE F.30 – PLUG J2

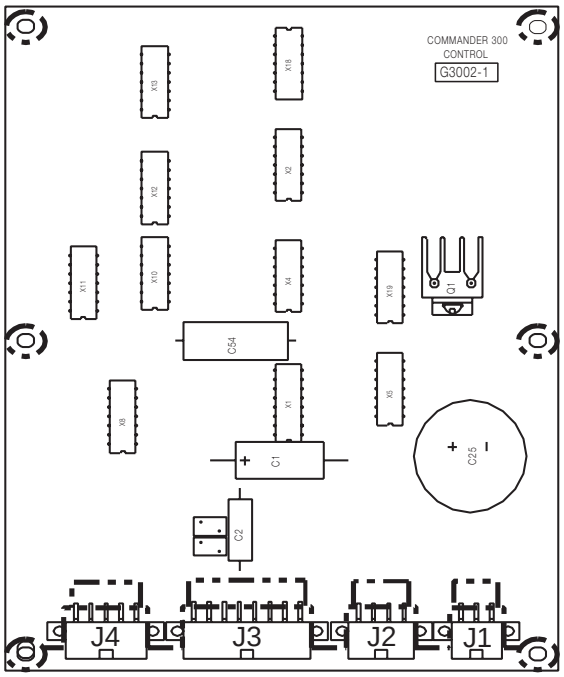

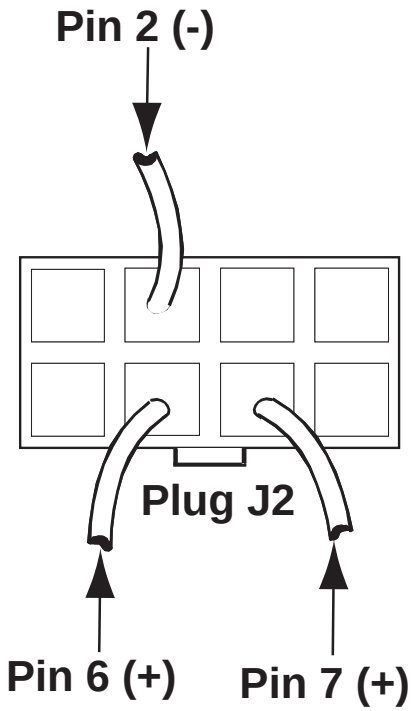

TEST PROCEDURE

1. Turn the engine off.
2. Perform the ***Case Cover Removal and Replacement Procedure***.
3. Tilt the control panel out.
4. Locate the J2 connector on the control board. See Figure F.30.
5. Start the machine.
6. With a voltmeter, measure the following voltages from J2 pin 6 (pos. lead) to J2 pin 2 (neg. lead) at the control board. ***See Table F.2.***

⚠ WARNING

ELECTRIC SHOCK CAN KILL.



- Do not touch electrically live parts such as output terminals or internal wiring.
- Insulate yourself from the work and ground.
- Always wear dry insulating gloves.

7. Set the Arc Force dial in the min. position, the Range Selector switch to the CC position, and the Control dial to min.
8. Short the output studs.
9. Using a voltmeter, measure 4.378 - 4.648 VDC from J2 pin 7 (pos. lead) to J2 pin 2 (neg. lead). Set the Arc Force dial in the max. position. Measure 8.352 - 8.868 VDC from J2 pin 7 (pos. lead) to J2 pin 2 (neg. lead). The short circuit output current should increase as the Arc Force dial is turned from min to max. See Figure F.30.
10. Remove the short and turn the engine off.
11. If any of the voltage checks fail, proceed to the continuity check section.
12. Locate and disconnect J4 at the control board. See Figure F.30.
13. Set the range selector switch in the CV position.

Return to Section TOC
Return to Master TOC

CONTROL INPUT TEST *(continued)*

Table F.2.

CONTROL DIAL POSITION	RANGE SEL. SWITCH POS.	VOLTAGE
MIN	CV	1.223-1.299 VDC
MIN	60A	.553-.587 VDC
MIN	90A	.844-.896 VDC
MIN	150A	1.162-1.234 VDC
MIN	230A	1.524-1.618 VDC
MIN	300A	1.868-1.984 VDC
MIN	CC	.319-.339 VDC
MAX	CV	4.799-5.095 VDC
MAX	60A	1.085-1.153 VDC
MAX	90A	1.660-1.762 VDC
MAX	150A	2.285-2.427 VDC
MAX	230A	2.998-3.184 VDC
MAX	300A	3.669-3.895 VDC
MAX	CC	3.870-4.110 VDC

14. Using an ohmmeter, measure continuity at J4 in the following switch positions. See Table F.3 below.

Table F.3.

RANGE SEL. SWITCH POSITION	CONTINUITY FROM
CV	J4 pin 1 to 9
60A	J4 pin 1 to 6
90A	J4 pin 1 to 2
150A	J4 pin 1 to 5
230A	J4 pin 1 to 7
300A	J4 pin 1 to 8
CC	J4 pin 1 to 10

15. If continuity fails or is intermittent in any of the above switch positions, check for continuity and poor connections on all leads from the switch back to the control board. Check for loose or faulty connections in molex connectors.
16. Plug J4 back into the control PC board.
17. Locate and disconnect J3 at the control PC board. ***See Figure F.30.***
18. Set the control dial to the minimum position, set the Arc Force dial to the minimum position, and set the Local/Remote switch in the “Local” position.
19. Using an ohmmeter, measure 10K from J3 pin 7 to J3 pin 8.
20. Using an ohmmeter, measure the resistance from J3 pin 7 to J3 pin 16. ***See Figure F.31.*** The resistance on the ohmmeter should increase from 0 ohms to 10K uniformly as the control dial is turned clockwise from minimum to maximum.
21. If the resistance check in step 19 & 20 fails, check for continuity and poor connections on all 75, 76, and 77 leads from the potentiometer back to the control board. See the Wiring Diagram. Look closely for broken molex pins.
22. Check the Local/Remote switch for continuity.
23. If all the leads and the Local/Remote switch check ok, the control potentiometer is bad. Replace.

Return to Section TOC
Return to Master TOC

CONTROL INPUT TEST *(continued)*

FIGURE F.31 – Plug J3

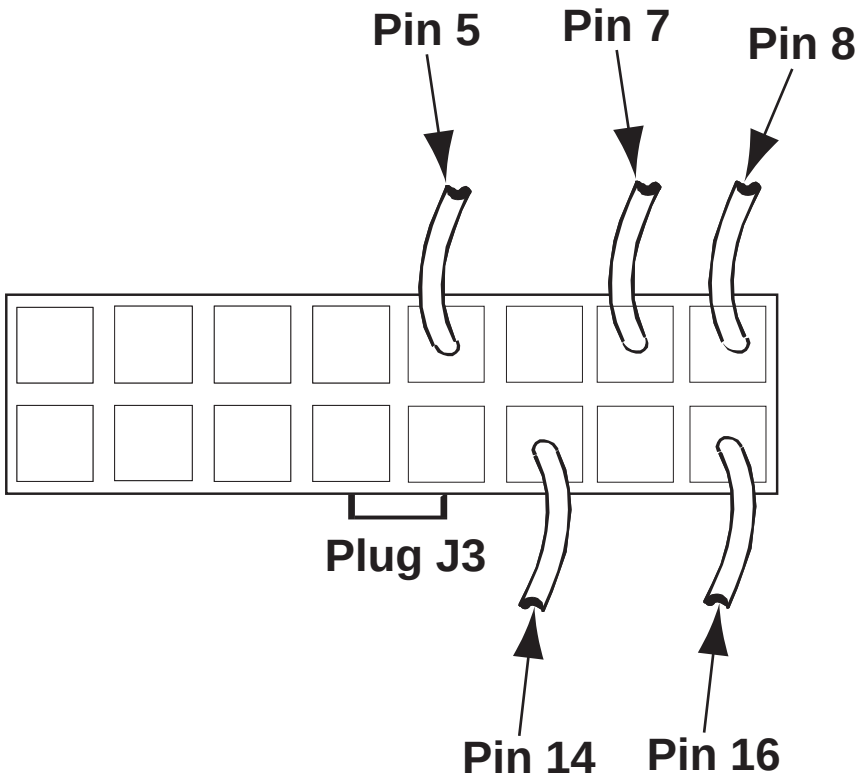

24. Using a remote control hooked up to the machine amphenol, set the Local/Remote switch in the “Remote” position, and the remote control dial to the minimum position. Repeat steps 19-21. Remember to include the RF bypass PC board in the continuity check.
25. Disconnect the remote control.
26. Using an ohmmeter, measure the resistance from J3 pin 5 to J3 pin 14. See Figure F.31. The resistance should decrease from 50K to 0 ohms uniformly as the arc force dial is turned clockwise from minimum to maximum.
27. If the resistance check in step 26 fails, check for continuity and poor connections on leads 277, 278, and 278A from the potentiometer back to the control board. See the Wiring Diagram. Look closely for broken molex pins.
28. If all leads check ok, the Arc Force potentiometer is bad. Replace.
29. Plug J3 back into the control PC board.
30. If all continuity checks in this section are ok but the voltage checks from the previous section are off, replace the control board.
31. Using the Case ***Cover Removal and Replacement Procedure***, install the control panel and side panels on the machine.

Return to Section TOC
Return to Master TOC

FEEDBACK INPUT TEST

⚠ WARNING

Service and repair should be performed by only Lincoln Electric factory trained personnel. Unauthorized repairs performed on this equipment may result in danger to the technician or machine operator and will invalidate your factory warranty. For your safety and to avoid electrical shock, please observe all safety notes and precautions detailed throughout this manual.

If for any reason you do not understand the test procedures or are unable to perform the test/repairs safely, contact the Lincoln Electric Service Department for electrical troubleshooting assistance before you proceed. Call 1-888-935-3877.

DESCRIPTION

This test will determine if the weld current and voltage feedback circuits, and the circuits on the control board that interface with the feedback circuits are functioning properly.

MATERIALS NEEDED

3/8" Wrench
5/16” Nut Driver
Multi-meter
Ammeter (for weld current)
Voltmeter (for weld voltage)

This procedure should take approximately 45 minutes to perform.

Return to Section TOC
Return to Master TOC
Return to Section TOC
Return to Master TOC
Return to Section TOC
Return to Master TOC
Return to Section TOC
Return to Master TOC

FEEDBACK INPUT TEST *(continued)*

FIGURE F.32 - CONTROL BOARD

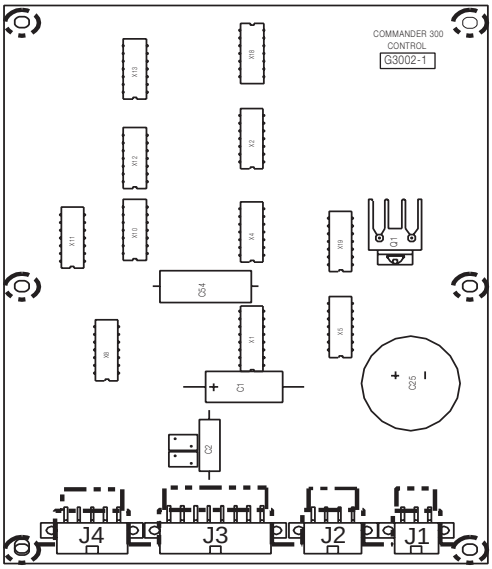

TEST PROCEDURE

1. Turn the engine off.
2. Using the ***Case Cover Removal and Replacement*** Procedure and tilt the control panel out.

⚠ WARNING

ELECTRIC SHOCK CAN KILL.



- Do not touch electrically live parts such as output terminals or internal wiring.
- Insulate yourself from the work and ground.
- Always wear dry insulating gloves.

3. Start the machine.
4. In CC mode and with the weld terminal switch in the "always on" position, load the machine on a load grid to 200 amps at 25 VDC using an external ammeter and voltmeter to measure weld amps and volts.
5. With a voltmeter, measure the voltage from J3 pin 15 (pos. lead) to J3 pin 6 (neg. lead). ***See Figure F.33.*** The voltage should be approximately 25 mvdc.
6. If the voltage is off by more than 2.5 mvdc, the shunt and lead assembly is bad. Replace.
7. Locate the J2 connector on the control PC board. Keep the machine running and same grid load applied.
8. Using a voltmeter, measure the voltage from J2 pin 1 (pos. lead) to J2 pin 2 (neg. lead). ***See Figure F.33.*** The voltage should read 1.788 - 2.185 VDC.
9. In the CC mode, load the machine to 200 amps at 30 VDC using an external ammeter and voltmeter.
10. Using a voltmeter, measure the voltage from J2 pin 5 (pos. lead) to J2 pin 2 (neg.lead). ***See Figure F.33.*** The voltage should read 3.521 - 3.739 VDC.
11. Remove the load and turn the engine off.
12. If any of the voltage checks fail, proceed to the continuity check section.

CONTINUITY CHECKS SECTION:

1. Locate and disconnect J3 at the control PC board.
2. Using an ohmmeter, check for continuity from J3 pin 15 to J3 pin 6. ***See Figure F.33.*** Also check for continuity from J3 pin 6 to the negative stud.
3. If either continuity test does not measure 0 ohms, check for continuity and poor connections on leads 21 and 22 from the shunt back to the control board. See the wiring diagram. Look closely for broken molex pins.
4. If all leads check ok, the shunt is bad. Replace.
5. Using an ohmmeter, check for continuity from J3 pin 2 to the positive stud.

Return to Section TOC
Return to Master TOC

FEEDBACK INPUT TEST *(continued)*

FIGURE F.33. – Plug J2 & J3

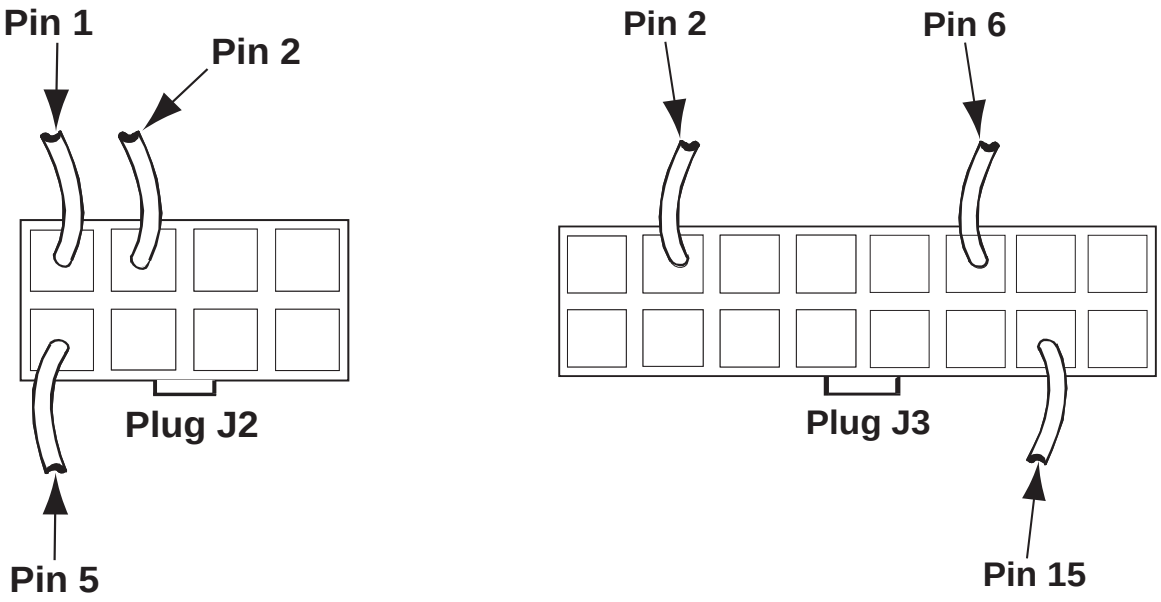

6. If the continuity is not present, check the 67 lead for poor connection. See the Wiring Diagram. Look closely for broken molex pins.
7. Plug J3 back into the control PC board.
8. If all continuity checks in this section are ok but the voltage checks from the previous section are off, replace the control board.
9. Using the ***Case Cover Removal and Replacement*** Procedure, install the control panel and side panels on the machine.

Return to Section TOC
Return to Master TOC

F-70

NOTES

Return to Section TOC
Return to Master TOC
Return to Section TOC
Return to Master TOC
Return to Section TOC
Return to Master TOC
Return to Section TOC
Return to Master TOC

PWM OUTPUT TEST

⚠ WARNING

Service and repair should be performed by only Lincoln Electric factory trained personnel. Unauthorized repairs performed on this equipment may result in danger to the technician or machine operator and will invalidate your factory warranty. For your safety and to avoid electrical shock, please observe all safety notes and precautions detailed throughout this manual.

If for any reason you do not understand the test procedures or are unable to perform the test/repairs safely, contact the Lincoln Electric Service Department for electrical troubleshooting assistance before you proceed. Call 1-888-935-3877.

DESCRIPTION

This test will determine if the weld terminal switch and PWM output circuit on the control board are responding properly to input changes from the feedback and control input circuits. This test assumes that the **CONTROL INPUT TEST** and **FEEDBACK INPUT TEST** have already been performed.

MATERIALS NEEDED

3/8” Wrench
5/16" Nut Driver
Multi-meter
Oscilloscope

This procedure should take approximately 60 minutes to perform.

Return to Section TOC
Return to Master TOC
Return to Section TOC
Return to Master TOC
Return to Section TOC
Return to Master TOC
Return to Section TOC
Return to Master TOC

PWM OUTPUT TEST *(continued)*

FIGURE F.34 – Plug J13 w/pins 4 & 5

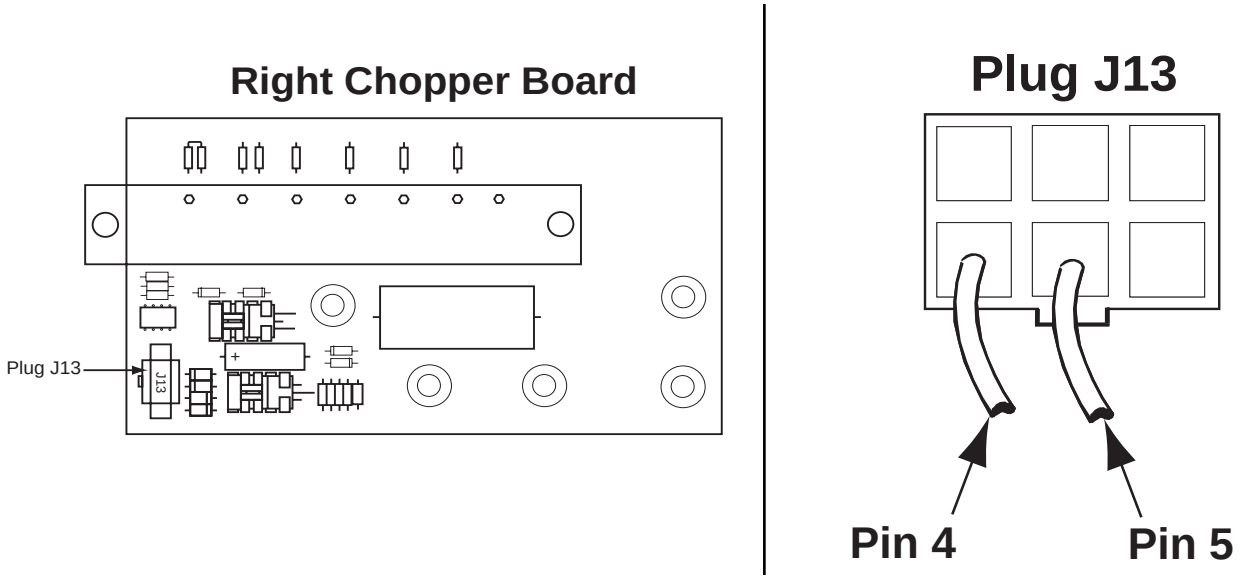

TEST PROCEDURE

1. Turn the engine off.
2. Using the ***Case Cover Removal and Replacement Procedure*** and tilt the control panel out.

⚠ WARNING

ELECTRIC SHOCK CAN KILL.



- Do not touch electrically live parts such as output terminals or internal wiring.
- Insulate yourself from the work and ground.
- Always wear dry insulating gloves.

3. Start the machine.
4. In the CC mode, load the machine on a load grid to 375 amps at 34 VDC.
5. Using an oscilloscope, measure the PWM waveform from J13 pin 5 (probe) to J13 pin 4 (gnd) at the right chopper board. See Figure F.34.
6. Turn the weld terminals switch to the "Remotely Controlled" position. The PWM waveform on the scope should go to zero and the machine output should go to zero.
7. Connect a remote control to the machine amphenol. Turn the remote 2-4 switch to the "on" position. The PWM waveform should reappear and the machine output should be re-established.
8. Disconnect the remote control.
9. If the PWM waveform does not change, use a voltmeter to check for 10.0 VDC from J1 pin 6 to frame ground with the weld terminal switch in the remotely controlled position. See Figure F.35.
10. Turn the weld terminals switch to the "always on" position and the control dial to the max position.

FIGURE F.35 – Plug J1 pin 6

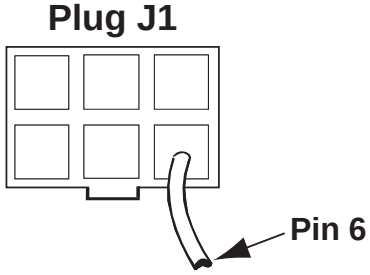

Return to Section TOC
Return to Master TOC

PWM OUTPUT TEST *(continued)*

11. Using an oscilloscope, measure the PWM waveform from J13 pin 5 (probe) to J13 pin 4 (gnd). ***See Figure F.34.*** The PWM waveform should uniformly decrease as the control dial is turned counterclockwise to the min position. See below for min and max potentiometer waveforms.

FIGURE F.36 – Min./Max. Potentiometer Waveforms

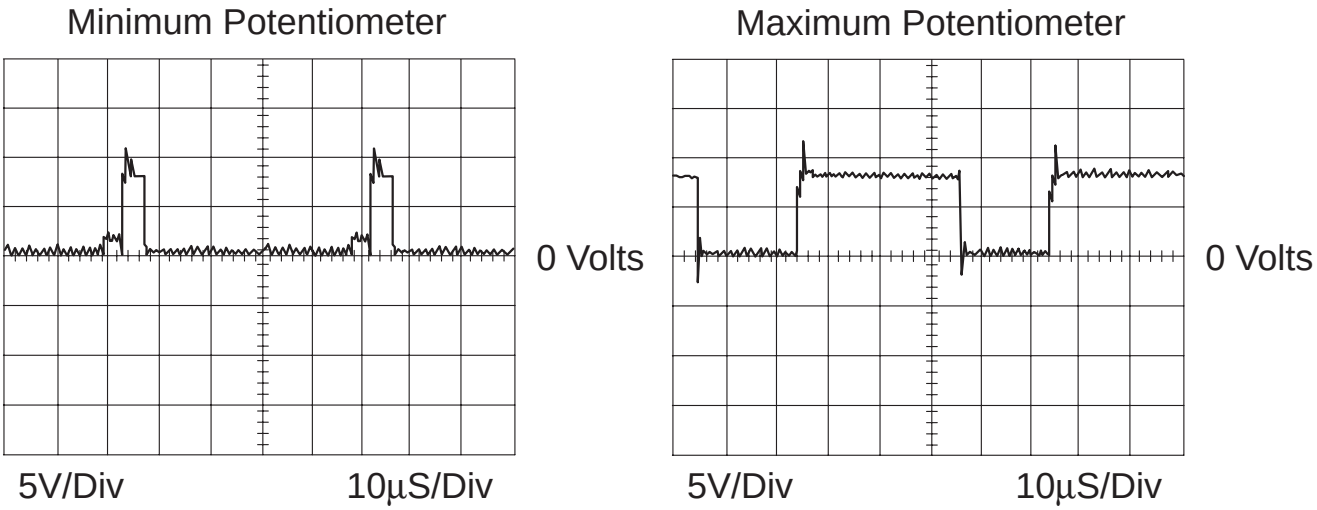

12. Repeat step 11 to check the PWM waveform at J12 pins 4 & 5 at the left chopper board. See Figure F.37.
13. Remove the load and turn the engine off.
14. If the measured min and max PWM waveforms do not match the waveforms shown, proceed to the continuity check section.

CONTINUITY CHECK SECTION:

1. Locate and disconnect J12 and J13 at each of the chopper boards and J3 at the control board.
2. Check leads 23, 23A, 25, & 25A for continuity from J12 and J13 at the chopper boardS to J3 at the control board. See the Wiring Diagram. Look closely for broken molex pins.
3. Plug J3 back into the control board, J12 and J13 back into their chopper boards.
4. Locate and disconnect J1 at the control board. Also locate and disconnect J5 & J7 at the engine protection board. ***See Figure F.38.***
5. Check leads 90, 91, 248, and 242 for continuity. See the Wiring Diagram. Check for broken molex pins.
6. Check the weld terminal switch for continuity.
7. Plug J1 back into the control board, J5 & J7 back into the engine protection board.
8. If all continuity checks in this section are ok but the voltage checks from the previous section are off, replace the control board.

FIGURE F.37 – Plug J12 Pins 4 & 5

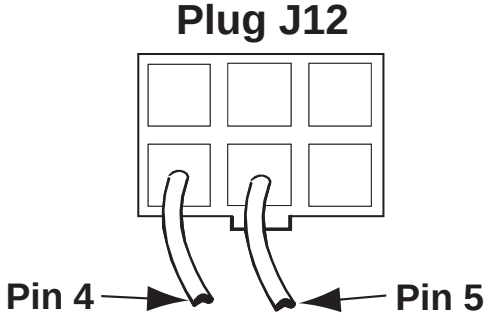

Return to Section TOC
Return to Master TOC

PWM OUTPUT TEST *(continued)*

FIGURE F.38 – Engine Protection Board (Plug Locations)

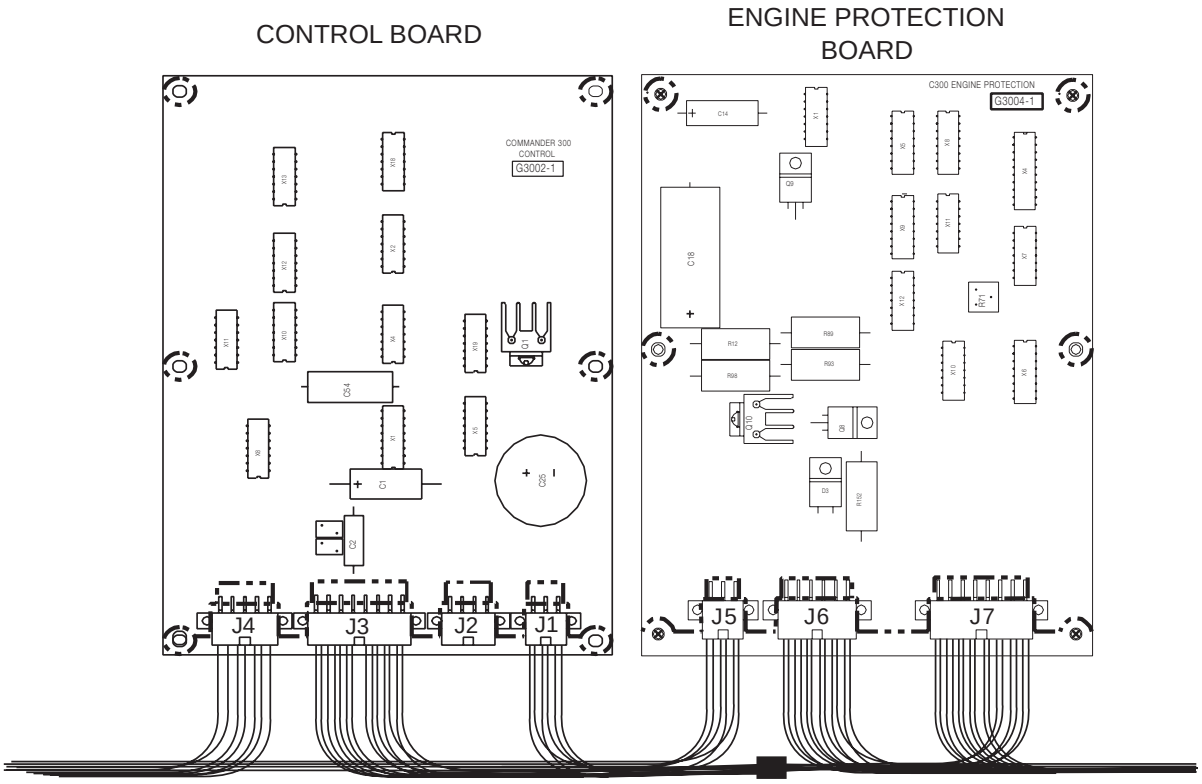

9. Using the ***Case Cover Removal and Replacement Procedure***, install the control panel and side panels of the machine.

Return to Section TOC
Return to Master TOC

POWER SUPPLY TEST

⚠ WARNING

Service and repair should be performed by only Lincoln Electric factory trained personnel. Unauthorized repairs performed on this equipment may result in danger to the technician or machine operator and will invalidate your factory warranty. For your safety and to avoid electrical shock, please observe all safety notes and precautions detailed throughout this manual.

If for any reason you do not understand the test procedures or are unable to perform the test/repairs safely, contact the Lincoln Electric Service Department for electrical troubleshooting assistance before you proceed. Call 1-888-935-3877.

DESCRIPTION

This test will determine if all the power supplies needed to control weld, display, and idler output are ok. This test assumes that the **CONTROL TRANSFORMER TEST** has already been performed.

MATERIALS NEEDED

3/8" Wrench
5/16” Nut Driver
Multi-meter

This procedure should take approximately 30 minutes to perform.

Return to Section TOC
Return to Master TOC
Return to Section TOC
Return to Master TOC
Return to Section TOC
Return to Master TOC
Return to Section TOC
Return to Master TOC

POWER SUPPLY TEST *(continued)*

TEST PROCEDURE

1. Turn the engine off.
2. ***Perform the Case Cover Removal and Replacement Procedure*** and tilt the control panel out.

⚠ WARNING

ELECTRIC SHOCK CAN KILL.



- Do not touch electrically live parts such as output terminals or internal wiring.
- Insulate yourself from the work and ground.
- Always wear dry insulating gloves.

3. Start the machine.
4. Using a voltmeter, measure the following supply voltages at the designated points. See Table F.4.
5. Turn the engine off.
6. Using the ***Case Cover Removal and Replacement Procedure***, install the control panel and side panels on the machine.

Table F.4

SUPPLY VOLTAGE	MEASURED AT:	FUNCTION AFFECTED	CHECK/REPLACE
+12VDC control	J2 pin 3 to 2 @ control bd	Weld output/display output	Control board
+12VDC control	J1 pin 4 to 1 @ control bd	Idler control	Control board
+12VDC control	J5 pin 4 to 1 @ engine prot. bd	Idler control	leads 108, 109/cont. bd
30VAC control	J12 pin 1 to 2 @ LT chopper bd	Weld output	leads 15, 16
30VAC control	J13 pin 1 to 2 @ RT chopper bd	Weld output	leads 13, 14
42VAC control	J3 pin 1 to 9 @ control bd	Weld output	leads 17, 18
+12VDC control	J9 pin 4 to 5 @ display bd	Display output (if so equipped)	leads 106, 107/cont. bd
+12VDC Battery	J9 pin 1 to 2 @ display bd (run/stop on)	Display output (if so equipped)	leads 232, 232J, 5L, 5N, 5M/Battery

Note: When checking leads for continuity or poor connection, remember to look closely for broken molex pins.

Return to Section TOC
Return to Master TOC

DISPLAY BOARD CALIBRATION TEST

⚠ WARNING

Service and repair should be performed by only Lincoln Electric factory trained personnel. Unauthorized repairs performed on this equipment may result in danger to the technician or machine operator and will invalidate your factory warranty. For your safety and to avoid electrical shock, please observe all safety notes and precautions detailed throughout this manual.

If for any reason you do not understand the test procedures or are unable to perform the test/repairs safely, contact the Lincoln Electric Service Department for electrical troubleshooting assistance before you proceed. Call 1-888-935-3877.

DESCRIPTION

This test will determine if the display board (if so equipped) is properly calibrated.

MATERIALS NEEDED

None

This procedure should take approximately 45 minutes to perform.

Return to Section TOC
Return to Master TOC
Return to Section TOC
Return to Master TOC
Return to Section TOC
Return to Master TOC
Return to Section TOC
Return to Master TOC

Return to Section TOC
Return to Master TOC

DISPLAY BOARD CALIBRATION TEST *(continued)*

TEST PROCEDURE

1. Start the engine.
2. Turn the range selector switch to the CC position, and control dial to the min. position.
3. With no load applied, slowly turn the control dial clockwise from min to max in each range selector switch position. The display should read the same as the Table F.5 shown below.
4. If the display reading is off in any mode, the display board must be re-calibrated.

RE-CALIBRATION PROCEDURE

5. Turn the engine off.
6. Set the control panel switches as follows:

   Welding Terminals switch to “Remotely Controlled”.

   Local/Remote switch to “Remote”.

   Range Selector switch to “60A”.

   Control Dial to “Min”.

   Idler Switch to “High”.

   Arc Control Wire/Stick dial to “Min”.
7. Start the engine.
8. Within 5 seconds after the top display reads “Crd”, switch the range selector switch to the CV position and back to the 60A position a minimum of 5 times. Must end up in the 60A position.
9. The top display should read “001” for about 5 seconds, then read “CAL” for about 5 seconds. The top display will then read “30”. The bottom display will read “---”. This completes the calibration process.
10. Repeat steps 2 & 3.
11. If the display is still off, turn the engine off.
12. Perform the ***Case Cover Removal and Replacement Procedure*** and tilt the control panel out.
13. Check all leads at J8 & J9 at the display board for continuity and poor connection. See the Wiring Diagram. Check for broken molex pins.
14. If all the leads are ok, perform steps 5 & 6 of the ***Control Input Test***. Measure the voltages in step 6 at J8 pin 3 (pos. lead) to J9 pin 5 (neg. lead) instead of measuring at the J2 connector on the control board.
15. Turn the engine off.
16. If any of the voltages were wrong, replace the control board. If the voltages were ok, replace the display board.

Table F.5.

RANGE SELECTOR SW. POSITION	FROM MIN.	TO MAX.
CC	30 amps	375 amps
300A	140 amps	300 amps
230A	100 amps	230 amps
150A	70 amps	150 amps
90A	50 amps	90 amps
60A	30 amps	60 amps
CV	10.5 volts	49-50 volts

Return to Section TOC
Return to Master TOC
Return to Section TOC
Return to Master TOC
Return to Section TOC
Return to Master TOC
Return to Section TOC
Return to Master TOC

NORMAL OPEN CIRCUIT VOLTAGE WAVEFORM (115VAC SUPPLY)

HIGH IDLE – NO LOAD

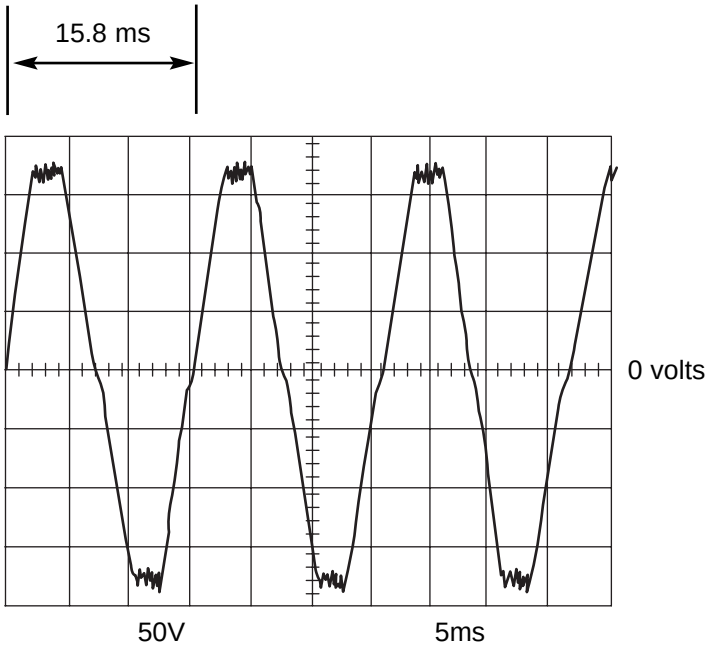

This is the typical auxiliary output voltage generated from a properly operating machine. Note that each vertical division represents 50 volts and that each horizontal division represents 5 milliseconds in time.

Note: Scope probes connected at machine 115VAC receptacle.

SCOPE SETTINGS

Volts/Div	50V/Div.
Horizontal Sweep	5 ms/Div.
Coupling	DC
Trigger	Internal

TROUBLESHOOTING & REPAIR

NORMAL OPEN CIRCUIT VOLTAGE WAVEFORM (STICK)

MAX TAP – MAX CONTROL POT – HIGH IDLE – NO LOAD

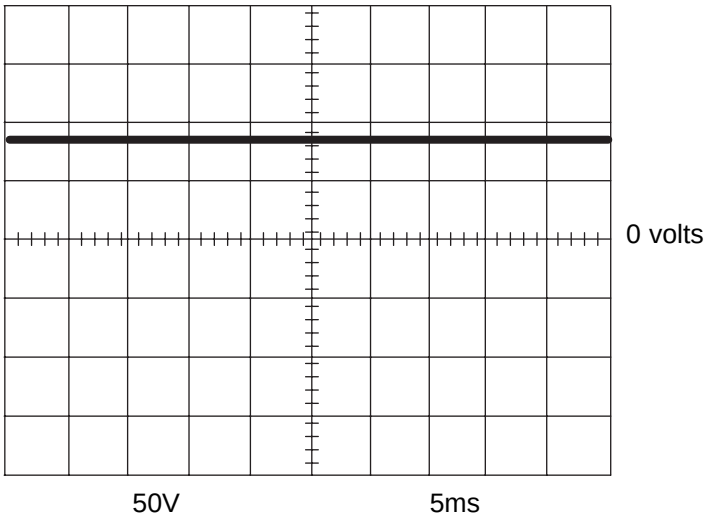

This is the typical DC open circuit output voltage generated from a properly operating machine. Note that each vertical division represents 50 volts and that each horizontal division represents 5 milliseconds in time.

SCOPE SETTINGS

Volts/Div	50V/Div.
Horizontal Sweep	5 ms/Div.
Coupling	DC
Trigger	Internal

Return to Section TOC
Return to Master TOC

TROUBLESHOOTING & REPAIR

NORMAL WELD VOLTAGE WAVEFORM (STICK CC)

MACHINE LOADED TO 300 AMPS AT 32 VOLTS

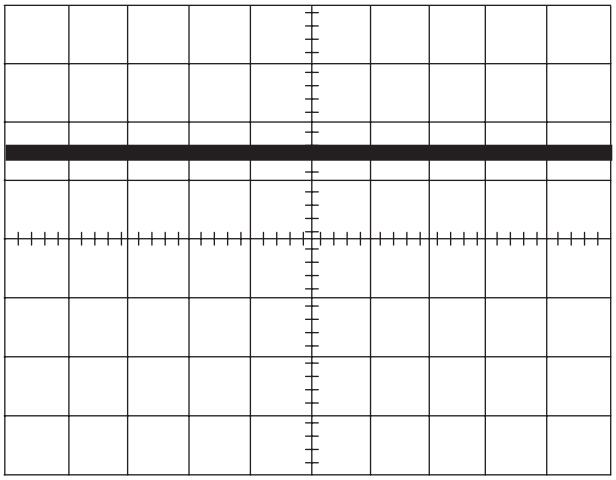

This is the typical DC output voltage generated from a properly operating machine. Note that each vertical division represents 20 volts and that each horizontal division represents 5 milliseconds in time.

The machine was loaded with a resistance grid bank to 300 amps at 32 volts.

SCOPE SETTINGS

Volts/Div	20V/Div.
Horizontal Sweep	5 ms/Div.
Coupling	DC
Trigger	Internal

Return to Section TOC
Return to Master TOC
Return to Section TOC
Return to Master TOC
Return to Section TOC
Return to Master TOC
Return to Section TOC
Return to Master TOC

NORMAL WELD VOLTAGE WAVEFORM (WIRE CV)

MACHINE LOADED TO 300 AMPS AT 32 VOLTS

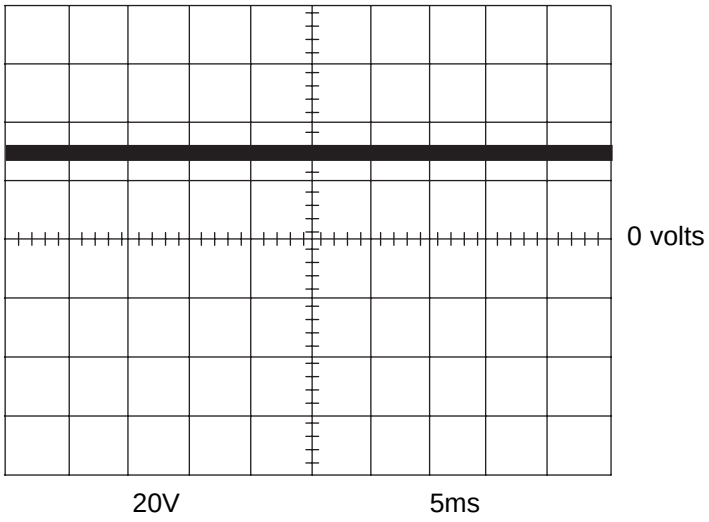

This is the typical DC output voltage generated from a properly operating machine. Note that each vertical division represents 20 volts and that each horizontal division represents 5 milliseconds in time.

The machine was loaded with a resistance grid bank to 300 amps at 32 volts.

SCOPE SETTINGS

Volts/Div	20V/Div.
Horizontal Sweep	5 ms/Div.
Coupling	DC
Trigger	Internal

Return to Section TOC
Return to Master TOC

TROUBLESHOOTING & REPAIR

NORMAL OPEN CIRCUIT VOLTAGE WAVEFORM (WIRE CV TAP)

MAX CONTROL POT – HIGH IDLE – NO LOAD

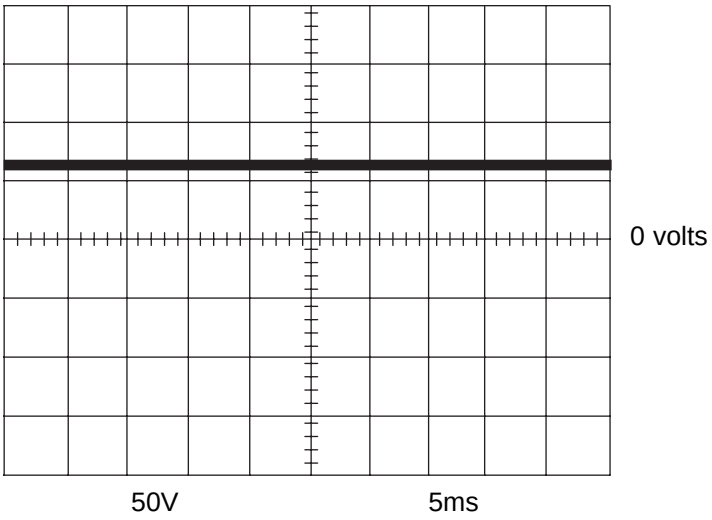

This is the typical DC open circuit output voltage generated from a properly operating machine. Note that each vertical division represents 50 volts and that each horizontal division represents 5 milliseconds in time.

SCOPE SETTINGS

Volts/Div	50V/Div.
Horizontal Sweep	5 ms/Div.
Coupling	DC
Trigger	Internal

Return to Section TOC
Return to Master TOC

NOTES

F-84

Return to Section TOC
Return to Master TOC
Return to Section TOC
Return to Master TOC
Return to Section TOC
Return to Master TOC
Return to Section TOC
Return to Master TOC

Return to Section TOC
Return to Master TOC

POWER MODULE/OUTPUT RECTIFIER BRIDGE ASSEMBLY REMOVAL AND REPLACEMENT

⚠ WARNING

Service and repair should be performed by only Lincoln Electric factory trained personnel. Unauthorized repairs performed on this equipment may result in danger to the technician or machine operator and will invalidate your factory warranty. For your safety and to avoid electrical shock, please observe all safety notes and precautions detailed throughout this manual.

If for any reason you do not understand the test procedures or are unable to perform the test/repairs safely, contact the Lincoln Electric Service Department for electrical troubleshooting assistance before you proceed. Call 1-888-935-3877.

TEST DESCRIPTION

This procedure will aid the technician in the removal and replacement of the power module/output rectifier bridge assembly. Once the assembly is removed, the power module PC boards and output rectifier bridge diodes can be accessed for removal and replacement.

MATERIALS NEEDED

3/8" Wrench
7/16" Wrench
1/2" Wrench

This procedure should take approximately 80 minutes to perform.

POWER MODULE/OUTPUT RECTIFIER BRIDGE ASSEMBLY REMOVAL AND REPLACEMENT *(continued)*

FIGURE F.39 – CONTROL PANEL REMOVAL

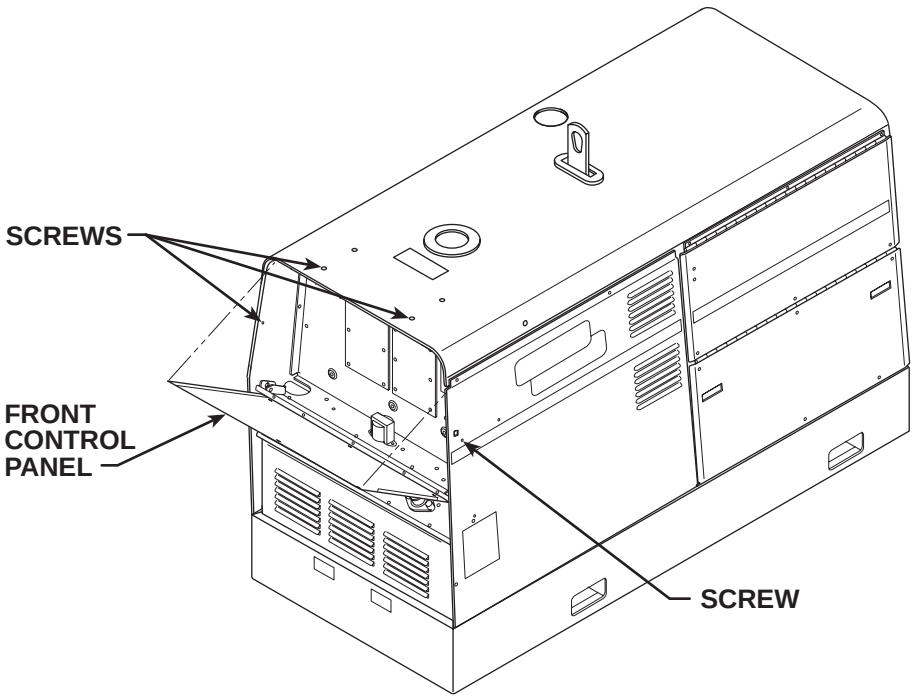

TEST PROCEDURE

1. Turn the engine off.
2. Using the 3/8" wrench, remove the screws holding the front control panel to the case top and sides. See Figure F.39. (There are two screws on the top and one screw on each side.)
3. Carefully lower the front control panel.
4. Using the 3/8" wrench, remove the front left and right side panels.
5. Perform the ***Output Panel Removal Procedure.***
6. Perform the ***Power Module Capacitor Discharge Procedure.***
7. Optional: With the 7/16" wrench, remove the ground wire from the output panel assembly. If the ground wire is not in the way, it can remain attached.

Return to Section TOC
Return to Master TOC

POWER MODULE/OUTPUT RECTIFIER BRIDGE ASSEMBLY REMOVAL AND REPLACEMENT *(continued)*

FIGURE F. 40 – POWER MODULE CAPACITOR LEAD REMOVAL

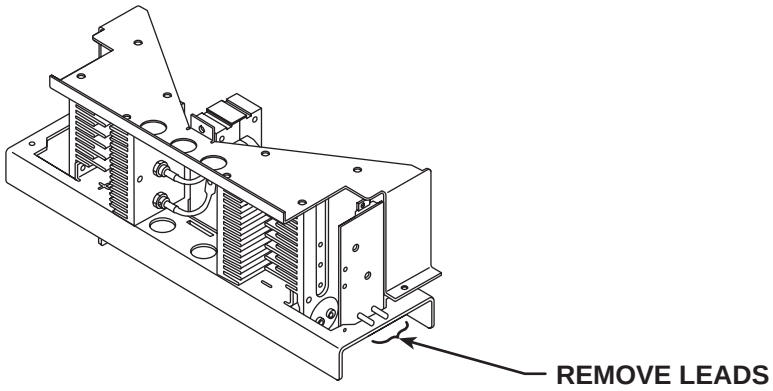

8. Label the power module capacitor leads. Using the 7/16" wrench, disconnect the leads by removing the nut, lock washer, and flat washer. See Figure F.40.
9. Disconnect plug J12 and plug J13 from each power module PC board. See the Wiring Diagram.
10. Using the 7/16" wrench, remove the stator “W” leads from the three terminals on the plastic insulator bracket of the rectifier bridge. Label the leads for reassembly. Pull the leads out through the power module top bracket. See ***Figure F.41.***
11. Using the 1/2" wrench, remove the flat strap to the negative output terminal. Pull the strap through the power module top bracket. See ***Figure F.41.***
12. With the 7/16" socket wrench, remove the four nuts, lock washers, flat washers, and carriage bolts that hold the power module bottom bracket to the machine base. See ***Figure F.41.***

Return to Section TOC
Return to Master TOC

Return to Section TOC
Return to Master TOC

POWER MODULE/OUTPUT RECTIFIER BRIDGE ASSEMBLY REMOVAL AND REPLACEMENT *(continued)*

FIGURE F.41 – POWER MODULE/OUTPUT RECTIFIER BRIDGE ASSEMBLY DETAILS

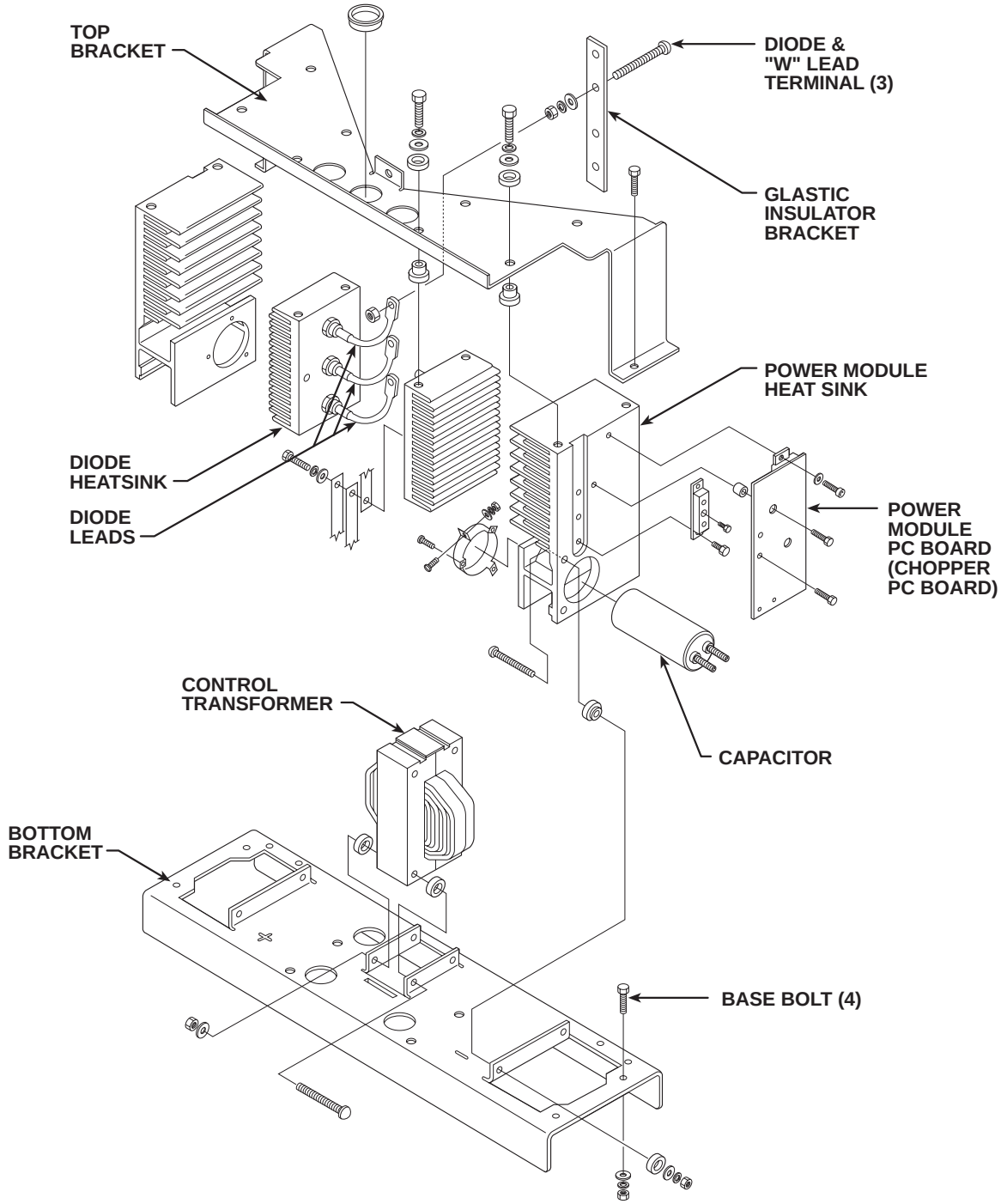

13. Free the positive output lead. Cut any necessary cable ties and slip the lead through the current sensing toroid assembly.
14. The power module/output rectifier bridge assembly can now be removed and set to the side.

NOTE: Leads #68A and #69A will remain attached between the machine and the assembly. To completely remove the assembly, label and disconnect leads #68A and #69A at their bolted connections beneath the bottom bracket.

Return to Section TOC
Return to Master TOC

POWER MODULE/OUTPUT RECTIFIER BRIDGE ASSEMBLY REMOVAL AND REPLACEMENT *(continued)*

REPLACEMENT PROCEDURE

1. Connect leads #68A and #69A at their bolted connections beneath the bottom bracket (if removed).
2. Place the assembly back into the machine.
3. Connect the positive output lead. Feed it through the toroid assembly.
4. Install the four carriage bolts, flat washers, lock washers, and nuts that hold the bottom bracket to the machine base.
5. Pull the flat negative output strap through the top bracket and attach it.
6. Feed the stator “W” leads through the top bracket and attach them to the terminals on the plastic insulator bracket.
7. Connect plugs J12 and J13 to the power module PC board (both sides).
8. Connect the power module capacitor leads. Torque the capacitor nuts to 50-60 inch-pounds.
9. Replace any cable ties cut during removal.
10. Install the output panel.
11. Connect the ground wire to the output panel assembly, if removed.
12. Attach the front left and right side panels and the front control panel.

NOTES

F-90

Return to Section TOC
Return to Master TOC
Return to Section TOC
Return to Master TOC
Return to Section TOC
Return to Master TOC
Return to Section TOC
Return to Master TOC

Return to Section TOC
Return to Master TOC
Return to Section TOC
Return to Master TOC
Return to Section TOC
Return to Master TOC
Return to Section TOC
Return to Master TOC

POWER MODULE (CHOPPER) PC BOARD REMOVAL AND REPLACEMENT

⚠ WARNING

Service and repair should be performed by only Lincoln Electric factory trained personnel. Unauthorized repairs performed on this equipment may result in danger to the technician or machine operator and will invalidate your factory warranty. For your safety and to avoid electrical shock, please observe all safety notes and precautions detailed throughout this manual.

If for any reason you do not understand the test procedures or are unable to perform the test/repairs safely, contact the Lincoln Electric Service Department for electrical troubleshooting assistance before you proceed. Call 1-888-935-3877.

TEST DESCRIPTION

This procedure will aid the technician in the removal and replacement of the power module (chopper) PC board.

MATERIALS NEEDED

7/16" Wrench
3/8" Allen head wrench

This procedure should take approximately 35 minutes to perform.

POWER MODULE (CHOPPER) PC BOARD REMOVAL AND REPLACEMENT *(continued)*

FIGURE F.42 – POWER MODULE PC BOARD

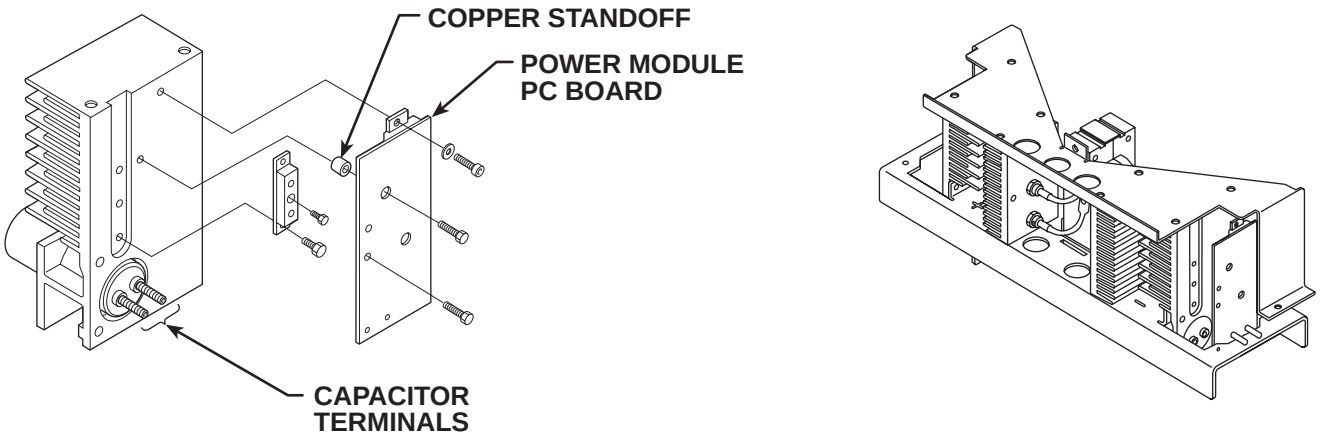

TEST PROCEDURE

1. Turn the engine off.
2. Remove the front right or left case side, depending on which power module PC board you are removing.
3. Perform the ***Capacitor Discharge Procedure.***
4. Perform the ***Output Panel Removal Procedure.***
5. With the 3/8" allen wrench, remove the top and bottom cap screws from the power module PC board. See Figure F.42.
6. With the 7/16" wrench, remove the three bolts, lock washers, and flat washers from the power module PC board.

NOTE: The top, long, bolt has a copper standoff on the opposite side of the board. Be sure to place this standoff between the heat sink and the PC board at reassembly.

7. Remove the nuts and flat washers from the capacitor terminals and remove the flat leads.
8. Remove the power module board.

REPLACEMENT PROCEDURE

1. Apply Penetrox A-13 joint compound to the surface of the heat sink where the power module PC board mounts.
2. Install the three bolts, lock washers, and flat washers to mount the power module PC board to the heat sink.

IMPORTANT: The top, long, bolt has a copper standoff on the opposite side of the board. Be sure to place this standoff between the heat sink and the PC board.

3. Install the top and bottom allen head cap screws. Torque the screws to 50-60 inch-pounds.
4. Install the leads, flat washers, and nuts to the capacitor. Torque the nuts to 50-60 inch-pounds.
5. Perform the ***Output Panel Replacement Procedure.***
6. Install the case side(s).

Return to Section TOC
Return to Master TOC

Return to Section TOC
Return to Master TOC
Return to Section TOC
Return to Master TOC
Return to Section TOC
Return to Master TOC
Return to Section TOC
Return to Master TOC

DIODE REMOVAL AND REPLACEMENT

⚠ WARNING

Service and repair should be performed by only Lincoln Electric factory trained personnel. Unauthorized repairs performed on this equipment may result in danger to the technician or machine operator and will invalidate your factory warranty. For your safety and to avoid electrical shock, please observe all safety notes and precautions detailed throughout this manual.

If for any reason you do not understand the test procedures or are unable to perform the test/repairs safely, contact the Lincoln Electric Service Department for electrical troubleshooting assistance before you proceed. Call 1-888-935-3877.

TEST DESCRIPTION

The following procedure will aid the technician in removing and replacing stud type diodes to the aluminum heat sinks on the Commander 300.

MATERIALS NEEDED

7/16" Wrench
1" Open end wrench
Penetrox A13
Loctite 271
“Slip” type torque wrench
E2827-2 abrasive disc

This procedure should take approximately 25 minutes to perform.

DIODE REMOVAL AND REPLACEMENT *(continued)*

FIGURE F.43 – POWER MODULE/OUTPUT RECTIFIER BRIDGE ASSEMBLY DETAILS

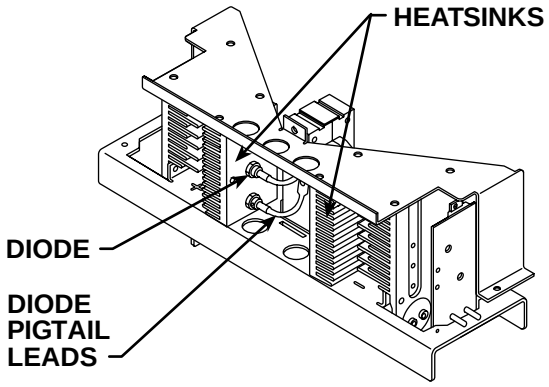

TEST PROCEDURE

1. Turn the engine off.
2. Perform the ***Output Panel Removal Procedure.***
3. Perform the ***Capacitor Discharge Procedure.***
4. Using the 7/16" wrench, remove the appropriate stator leads and diode pigtail lead from the stud on the output rectifier bridge plastic insulator bracket. Label leads for reassembly if more than one is removed. See Figure F.43.
5. Using the 1" wrench, loosen the appropriate diode and remove the diode that is to be replaced.
6. Clean the area on the heat sink around the diode mounting surface using a putty knife or similar tool. DO NOT SCRATCH THE DIODE MOUNTING SURFACE.
7. Polish the heat sink's mounting surface using an abrasive disc, E2827-2 to provide a bright, clean surface where the diode seats on the heat sink. Wipe the surface clean with a lint-free cloth or paper towel.
8. Inspect the mounting surfaces of each new diode. Remove all burrs and wipe clean. Do not use steel wool or any abrasive cleanser on the diode mounting surface.
9. Apply a thin (0.003" to 0.007") uniform layer of Penetrox A13 joint compound to the heat sink mounting surface.
10. Do not apply compound to the diode stud or mounting threads.
11. Apply two drops of Loctite 271to the diode stud threads before tightening.

NOTE: The diode threads must be clean and free of defects so that it can be finger tightened before applying torque. A “slip” type torque wrench must be used to tighten the diode.

12. Tighten the diode to the specifications in the following table.

DIODE SIZE	FOOT-POUNDS	INCH-POUNDS
3/4 - 16	25-27	300-324
3/8 - 24	10±.5	125+0/-5

13. Connect the stator leads and diode pigtail leads as labeled at disassembly.
14. Replace the output panel.

Return to Section TOC
Return to Master TOC

Return to Section TOC
Return to Master TOC
Return to Section TOC
Return to Master TOC
Return to Section TOC
Return to Master TOC
Return to Section TOC
Return to Master TOC

STATOR/ROTOR REMOVAL AND REPLACEMENT

⚠ WARNING

Service and repair should be performed by only Lincoln Electric factory trained personnel. Unauthorized repairs performed on this equipment may result in danger to the technician or machine operator and will invalidate your factory warranty. For your safety and to avoid electrical shock, please observe all safety notes and precautions detailed throughout this manual.

If for any reason you do not understand the test procedures or are unable to perform the test/repairs safely, contact the Lincoln Electric Service Department for electrical troubleshooting assistance before you proceed. Call 1-888-935-3877.

TEST DESCRIPTION

The following procedure will aid the technician in removing and replacing the Commander 300 stator and rotor.

MATERIALS NEEDED

3/8" Wrench	Slot head screw driver
7/16" Wrench	Phillips head screw driver
1/2" Wrench	Gear puller (small)
3/4" Wrench	Hoist
1" Open end wrench	Feeler gauge (for air gap check)
1-1/8" Wrench	

This procedure should take approximately 5½ hours to perform.

STATOR/ROTOR REMOVAL AND REPLACEMENT *(continued)*

FIGURE F.44 – FUEL TANK REMOVAL DETAILS

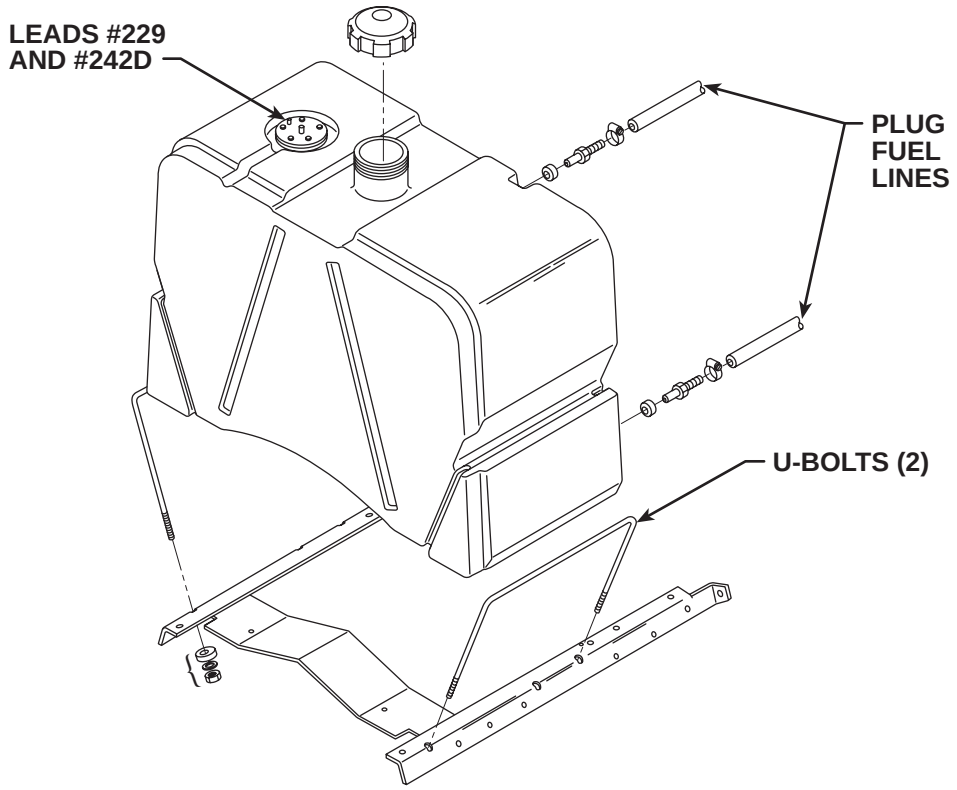

PREPARATION AND LEAD REMOVAL PROCEDURE

1. Turn the engine off.
2. Perform the ***Case Cover Removal Procedure,*** including removing the output panel.
3. Perform the ***Power Module/Output Rectifier Bridge Assembly Removal Procedure.***
4. Using the 3/8" wrench, remove leads #229 (white) and #242D from the fuel level sensor. See Figure F.44. Label the leads for reassembly.
5. Turn the fuel off at the shutoff valve. Remove and plug the fuel return line. See Figure F.44.
6. Remove and plug the lower fuel line. Pull it through the firewall. See Figure F.44.
7. Using the 9/16" socket wrench, remove the four lock nuts, washers, and rubber washers from from the fuel tank mounting U-bolts. See Figure F.44.
8. Carefully remove the U-bolts and lift the fuel tank from the machine.

Return to Section TOC
Return to Master TOC

STATOR/ROTOR REMOVAL AND REPLACEMENT *(continued)*

FIGURE F.45 – LEAD REMOVAL DETAILS

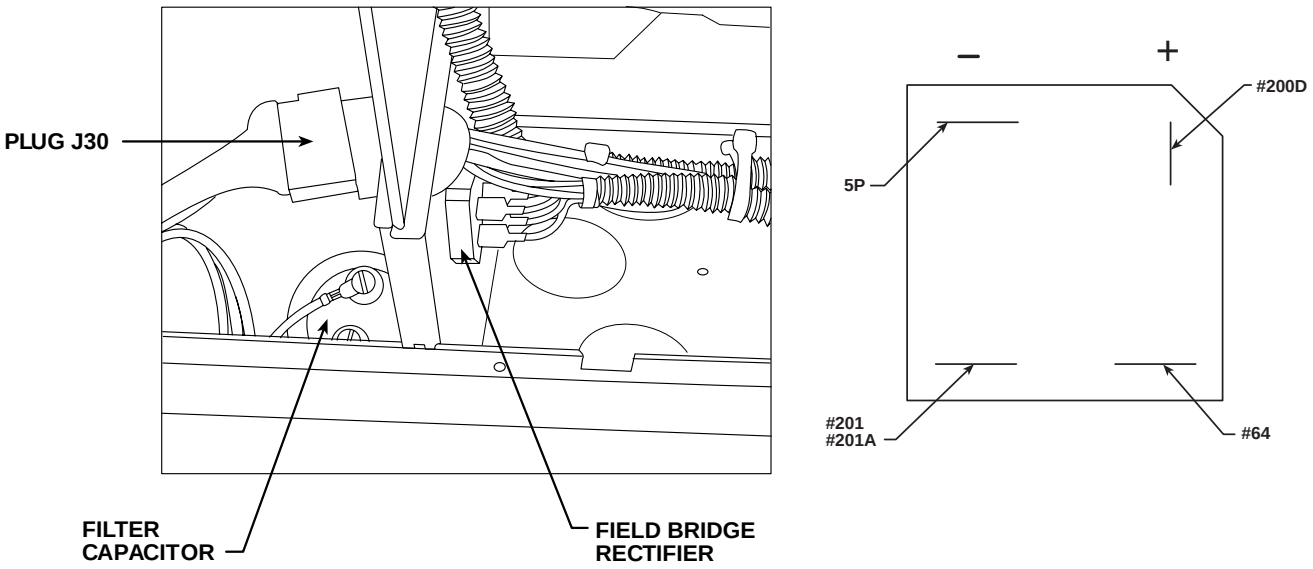

9. Disconnect plug J30 at the right front side. See Figure F.45.
10. Using the slot head screw driver, disconnect leads #200C, #200E(+) and #201B(-) from the filter capacitor. Label the leads.
11. Label and remove leads #5P, #201 and #201A, #200D, and #6H from the field bridge rectifier. See Figure F.45.

Return to Section TOC
Return to Master TOC

STATOR/ROTOR REMOVAL AND REPLACEMENT *(continued)*

FIGURE F.46 – BRUSH LEAD REMOVAL

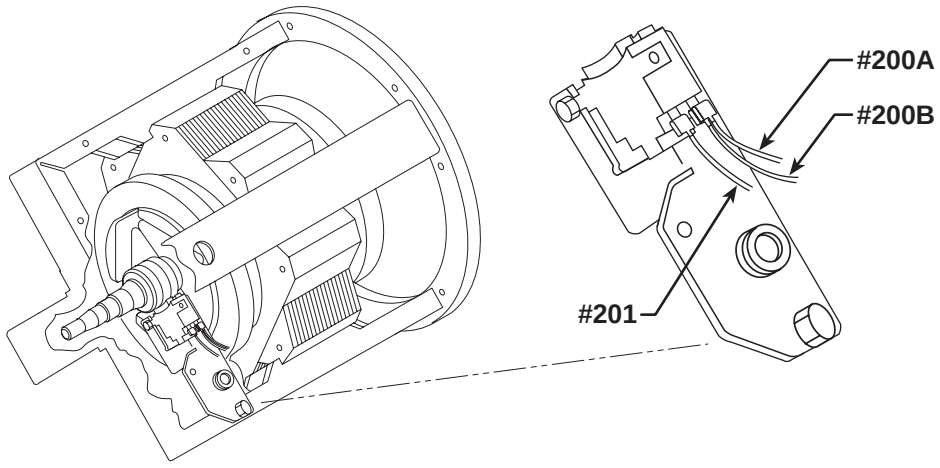

12. Label and remove brush leads #201(-) and #200A(+) and #200B(+) from the brush holder assembly. (The piggy-backed leads connect closest to the stator laminations.) See Figure F.46.
13. Pull the harness containing plug J30, the brush leads, and the field bridge rectifier through the bushing in the firewall. See ***Figure F.45.***
14. Using the 3/8" wrench, remove the brush holder assembly.
15. Using the 1/2" wrench, disconnect leads #68A and #69A at their bolted connections beneath the power module assembly. Label the leads for reassembly. Cut any necessary cable ties. See ***Figure F.47.***

Return to Section TOC
Return to Master TOC

STATOR/ROTOR REMOVAL AND REPLACEMENT *(continued)*

FIGURE F.47 – LEADS #68A/#69A BOLTED CONNECTIONS

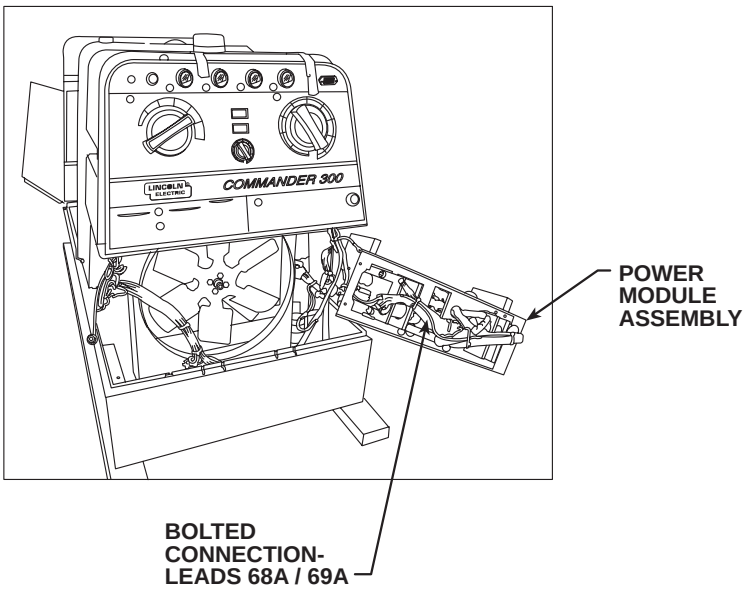

FIGURE F.48 – CONTROL BOX LEADS

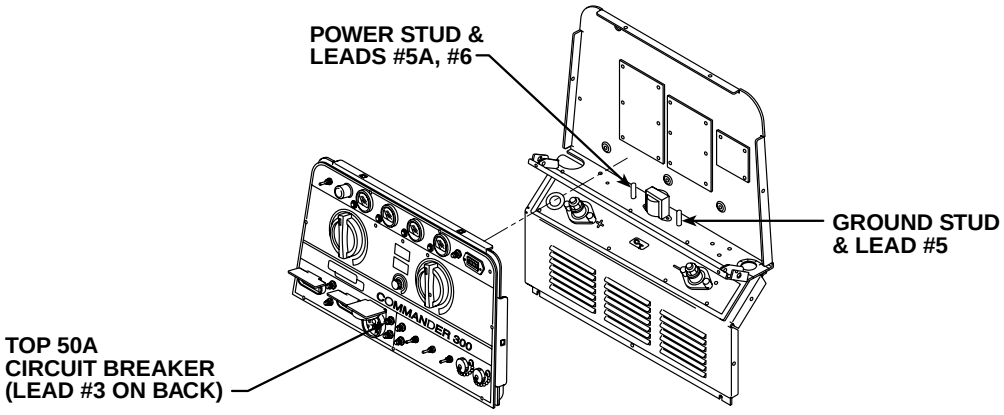

16. Using the 7/16" wrench, disconnect stator lead #6 from the auxiliary power stud on the left side of the control box. See Figure F.48.
17. With the 3/8" wrench, disconnect lead #5 from the center ground stud (nearest the control transformer). See Figure F.48.
18. Using the phillips screw driver, remove lead #3 from the top 50A circuit breaker for the 120/240V receptacle. See Figure F.48.

NOTE: This lead must be wound two turns clockwise through the toroid (opposite in direction from lead #6A).

19. Disconnect lead #5A from the auxiliary power ground stud (left side of the control box, next to the 120V circuit breaker). See Figure F.48.
20. Using the 3/8 wrench, remove the two screws holding the control box to the top of the fan baffle.

Return to Section TOC
Return to Master TOC

STATOR/ROTOR REMOVAL AND REPLACEMENT *(continued)*

FIGURE F.49 – LIFT FRAME AND ASSOCIATED COMPONENT REMOVAL

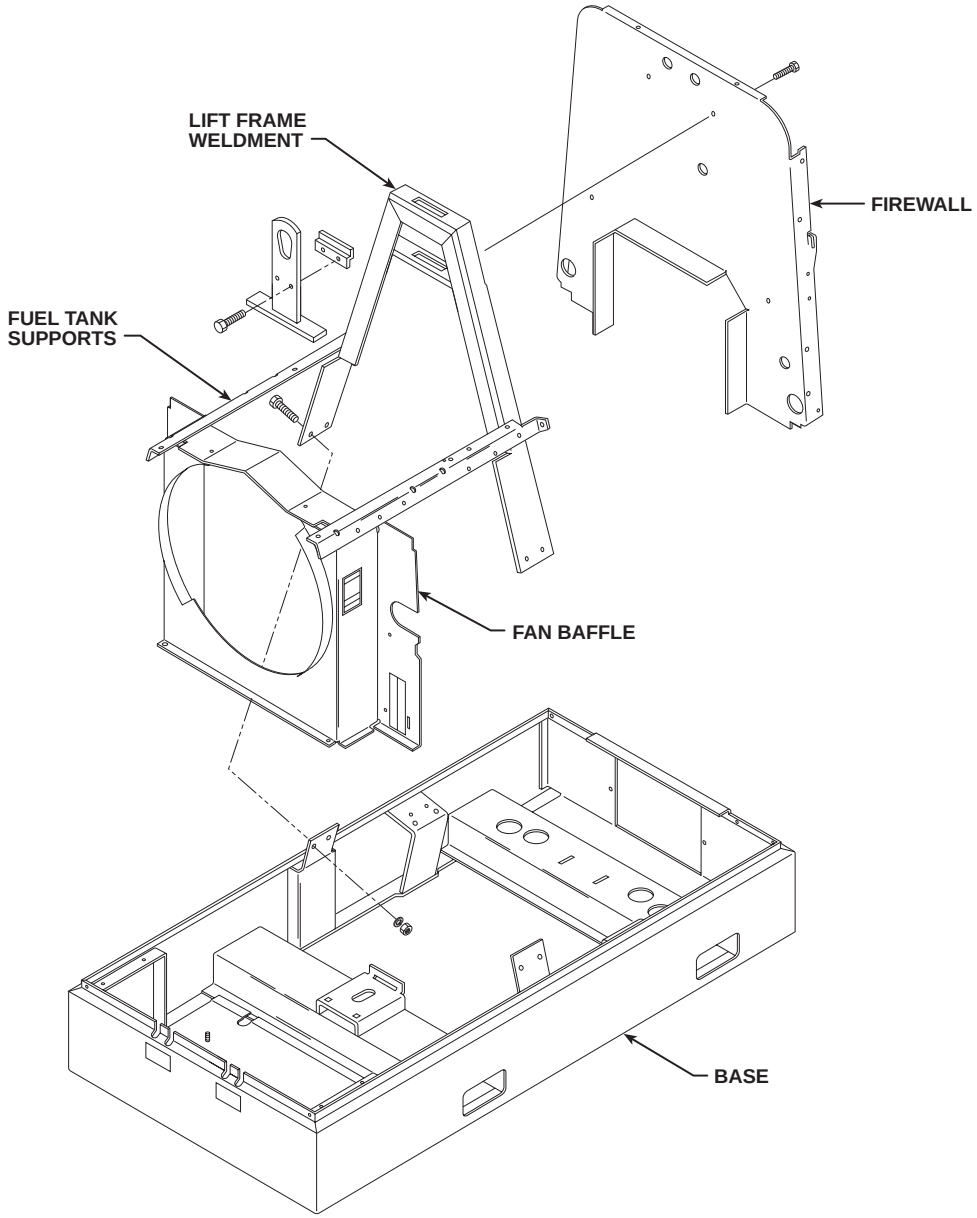

In steps 21 – 25, the lift frame weldment, fuel tank supports, and fan baffle are removed as a unit. See Figure F.49.

21. Using the 3/8" wrench, remove the two bolts (at top) that hold the firewall to the lift frame weldment.
22. Using the 1/2" wrench, remove the two bolts (at bottom) that hold the firewall to the lift frame weldment.
23. With the 3/8" wrench, remove the nuts, lock washers, and flat washers from the two studs that hold the fan baffle to the machine base.
24. Using the 3/4" wrench, remove the four bolts, lock washers, and nuts from the bottom of the lift frame weldment.
25. Carefully remove the lift frame weldment, fuel tank supports, and attached fan baffle. You will need to lift the fan baffle off the two studs on the machine base, then cock it slightly to remove it.

Return to Section TOC
Return to Master TOC

Return to Section TOC
Return to Master TOC

STATOR/ROTOR REMOVAL AND REPLACEMENT *(continued)*

FIGURE F.50 – STATOR REMOVAL

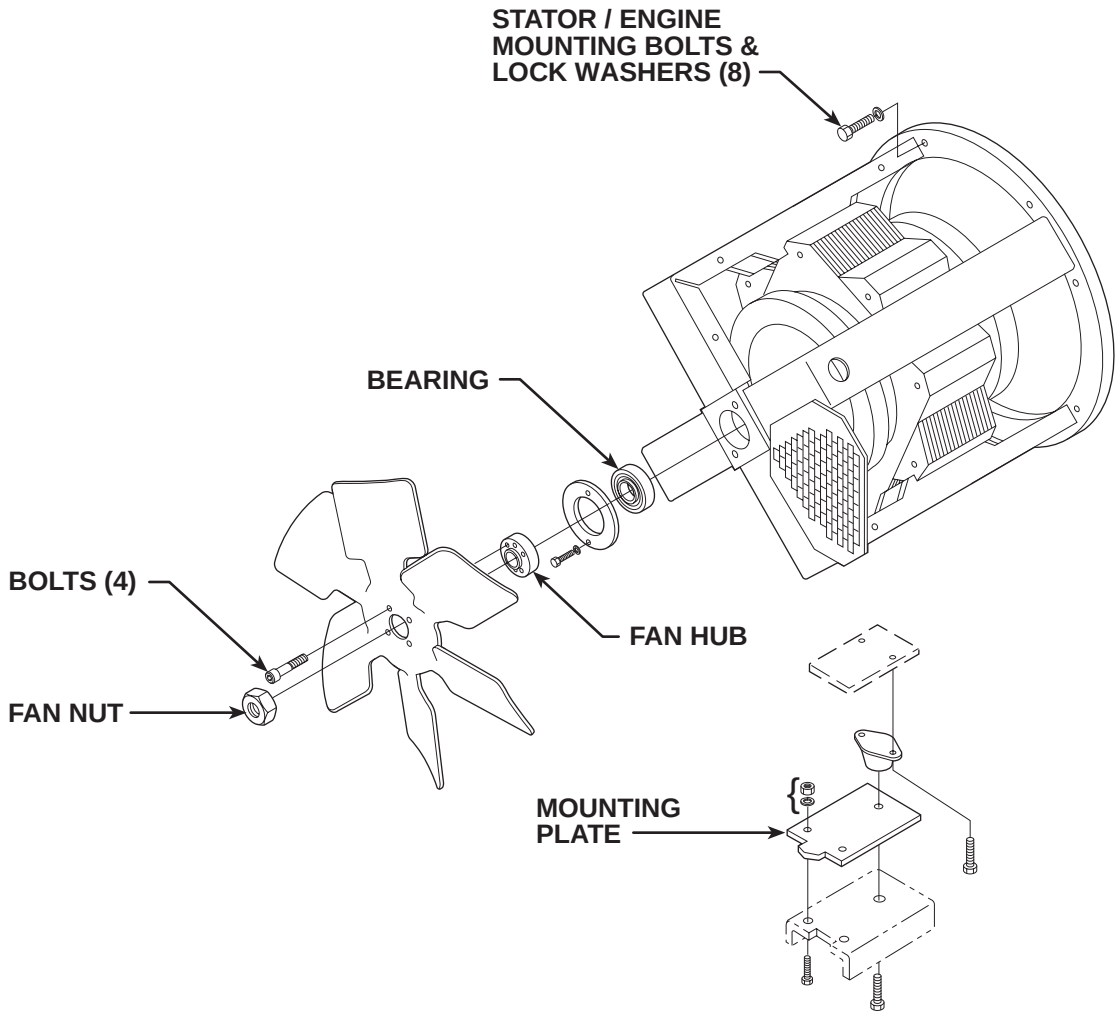

STATOR REMOVAL PROCEDURE

1. Using the 1/2" wrench, remove the four fan blade mounting bolts and lock washers. See Figure F.50.
2. Using the 1 1/8" wrench, remove the fan nut. Remove the fan, noting its direction for reassembly.
3. Using the gear puller, remove the fan hub.
4. Using the 3/8" wrench, remove the two bolts and flat washers holding the bearing in place.
5. Using the 1/2" wrench, remove the two nuts, lock washers, and carriage bolts holding the generator mounting plate to the machine base.
6. Support the stator with the hoist. Place wooden blocks under the engine to support it when the stator is removed.
7. Using the 9/16" wrench, remove the eight bolts and lock washers holding the stator to the engine.
8. Remove the stator from the engine. It may be necessary to pry and slide it free.

Return to Section TOC
Return to Master TOC

STATOR/ROTOR REMOVAL AND REPLACEMENT *(continued)*

FIGURE F.51 – ROTOR REMOVAL

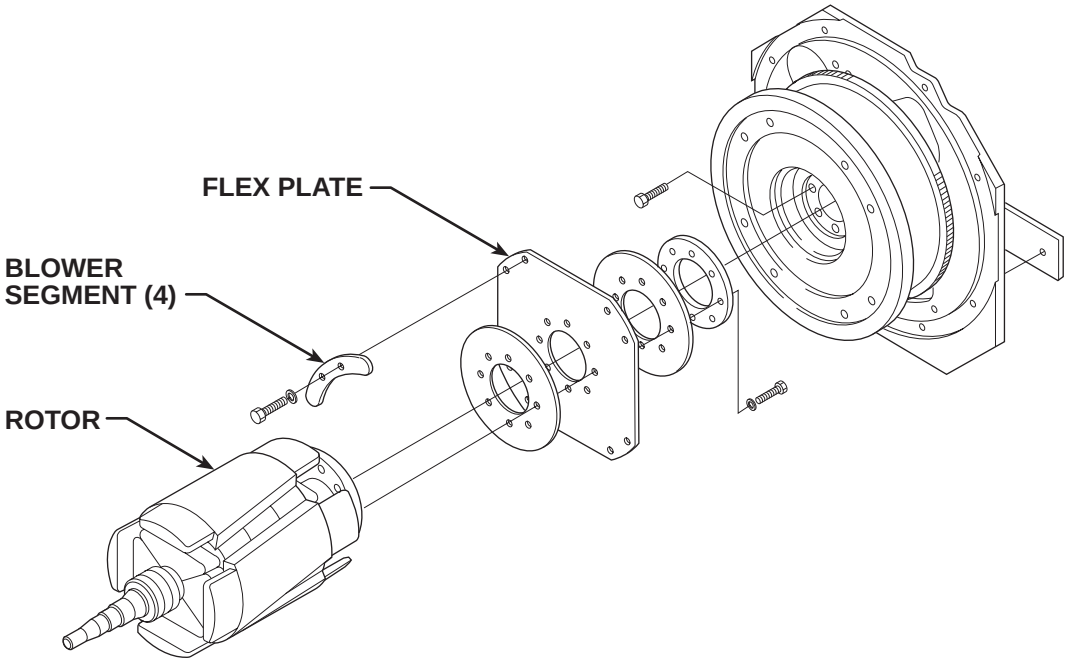

ROTOR REMOVAL PROCEDURE

1. Support the rotor with the hoist.
2. Using the 5/8" wrench, remove the flex plate bolts, lock washers, and four blower segments. See Figure F.51.

⚠ WARNING

The rotor will be free to fall when the bolts are removed.

3. Using the hoist, carefully remove the rotor and flex plate assembly.

REASSEMBLY NOTES

Reassemble the rotor and stator to the Commander 300 by carefully retracing the disassembly procedure steps in reverse order. Keep the following special points in mind as you proceed. Lead Reconnection Checklists are provided here as an aid to reassembly.

1. INSTALL ROTOR: Support the rotor with the hoist. Install the blower segments and flex plate to the engine flywheel.
2. INSTALL STATOR: Be sure the engine is blocked securely and the stator is supported with the hoist. Install the stator to the engine with the eight bolts and lock washers. Install the fan blade, making sure that it faces the proper direction, with the fan nut and four cap screws.
3. Check the air gap for .012" minimum.

STATOR/ROTOR REMOVAL AND REPLACEMENT *(continued)*

LEAD RECONNECTION CHECKLIST

Engine

- ❒ Leads #242D and #229 to fuel level sensor
- ❒ Plug J30
- ❒ Brush leads #201(-) and #200A(+) and #200B(+)
- ❒ Leads #5P, #201 and #201A, #200D, and #6H to the field bridge rectifier

Power Module Supply

- ❒ Bolted leads #68A and #69A
- ❒ Stator leads W1-W6
- ❒ Diode pigtails

Output Panel and Control Box

- ❒ Lead #5 to ground stud (center)
- ❒ Lead #5A to auxiliary power ground stud
- ❒ Lead #6 to auxiliary power stud (left) and toroid assembly (note number of turns and direction)
- ❒ Lead #3 to top 50A circuit breaker
- ❒ Leads #200C, #200E(+), and #200B(-) to the field capacitor

Return to Section TOC
Return to Master TOC
Return to Section TOC
Return to Master TOC
Return to Section TOC
Return to Master TOC
Return to Section TOC
Return to Master TOC

Return to Section TOC
Return to Master TOC
Return to Section TOC
Return to Master TOC
Return to Section TOC
Return to Master TOC
Return to Section TOC
Return to Master TOC

RETEST AFTER REPAIR

Retest a machine:

- If it is rejected under test for any reason that requires you to remove any mechanical part which could affect the machine's electrical characteristics. OR
- If you repair or replace any electrical components.

ENGINE OUTPUT

Mode	No Load RPM	Load RPM
Low Idle	1350 - 1400	NA
High Idle	1880 - 1919	1780 - 1820

WELDER DC (STICK) OUTPUT

Mode Selector Switch	Fine Control	Open Circuit Volts	Load Volts	Load Amps
30-375 Setting	Maximum	82-89	34-38	375-380

PIPE MODES SHORT CIRCUIT CURRENT (FINE CONTROL AT MAXIMUM)

Selector Position	Short Circuit Current (Amps)
60	80-120
90	180-210
150	280-320
230	380-410
300	380-410

WELDER CV (WIRE) OUTPUT

Mode Selector Switch	Fine Control	Open Circuit Voltage	Load Volts	Load Amps
CV Mig/Mag	Maximum	61-64	40-46	370-380
CV Mig/Mag	Maximum	61-64	48-52	20
CV Mig/Mag	Minimum	28-32	11-14	20

AUXILIARY POWER OUTPUT

230 Volt Receptacle			115 Volt Receptacles		
Open Circuit Voltage	Load Volts	Load Amps	Open Circuit Voltage	Load Volts	Load Amps
230 - 264	216-250	44	115 - 132	108 - 132	15

F-105

NOTES

Return to Section TOC
Return to Master TOC
Return to Section TOC
Return to Master TOC
Return to Section TOC
Return to Master TOC
Return to Section TOC
Return to Master TOC

TABLE OF CONTENTS
-ELECTRICAL DIAGRAMS SECTION-

ELECTRICAL DIAGRAMS . . . . . SECTION G
WIRING DIAGRAM (COMMANDER 300 DELUXE) G-2
WIRING DIAGRAM (COMMANDER 300 STANDARD) G-3
CONTROL PC BOARD SCHEMATIC G-4
CONTROL PC BOARD ASSEMBLY G-5
ENGINE PROTECTION PC BOARD SCHEMATIC G-6
ENGINE PROTECTION PC BOARD ASSEMBLY G-7
CHOPPER PC BOARD SCHEMATIC G-8
CHOPPER PC BOARD ASSEMBLY G-9
METER PC BOARD SCHEMATIC G-10
METER PC BOARD ASSEMBLY G-11
BYPASS PC BOARD SCHEMATIC G-12
BYPASS PC BOARD ASSEMBLY G-13

Return to Master TOC
Return to Master TOC
Return to Master TOC
Return to Master TOC

WIRING DIAGRAM - COMMANDER 300 DELUXE MODEL

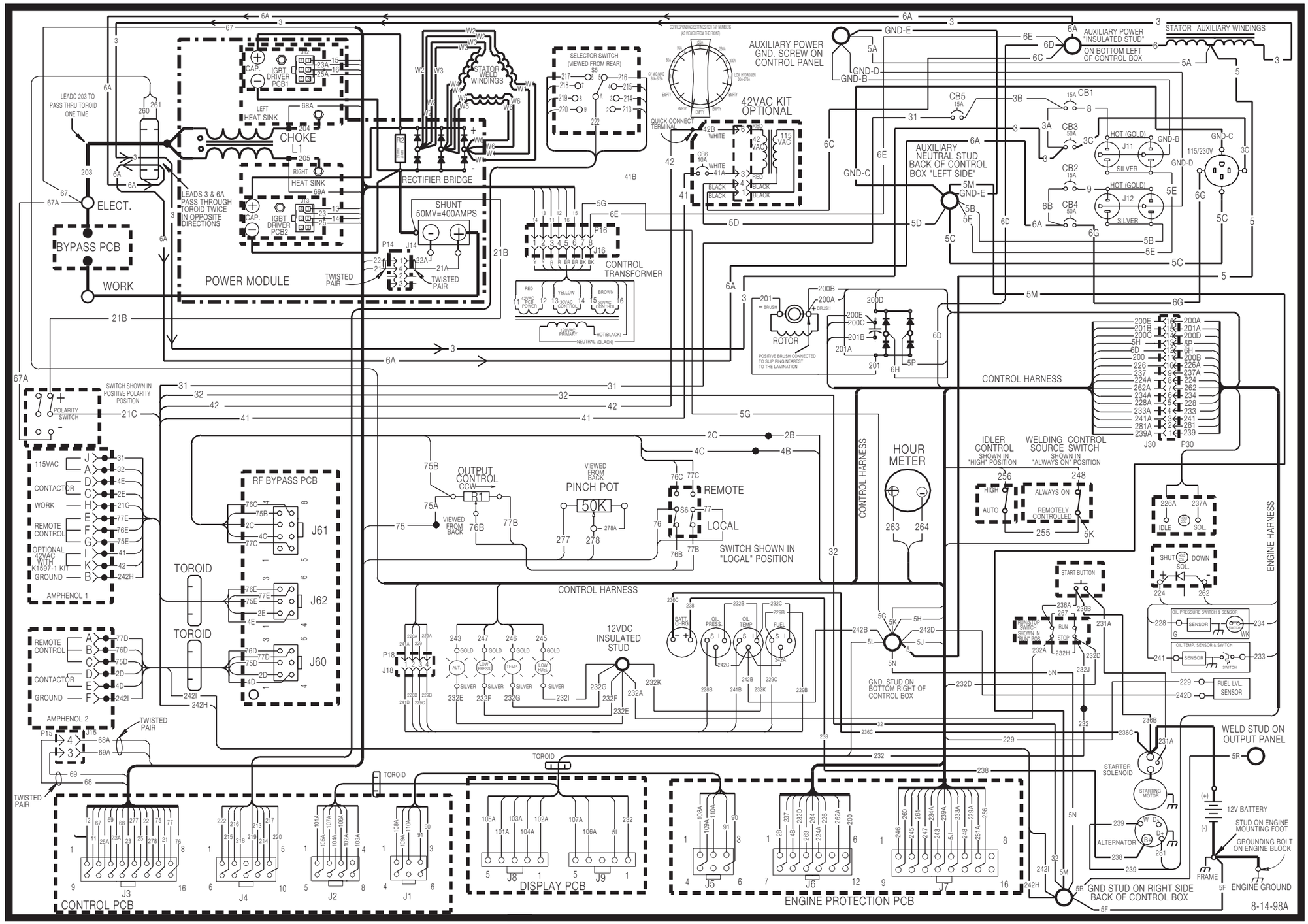

NOTE: This diagram is for reference only. It may not be accurate for all machines covered by this manual. The wiring diagram specific to your code is pasted inside one of the enclosure panels of your machine.

Return to Section TOC
Return to Master TOC
Return to Section TOC
Return to Master TOC
Return to Section TOC
Return to Master TOC

WIRING DIAGRAM - COMMANDER 300 STANDARD MODEL

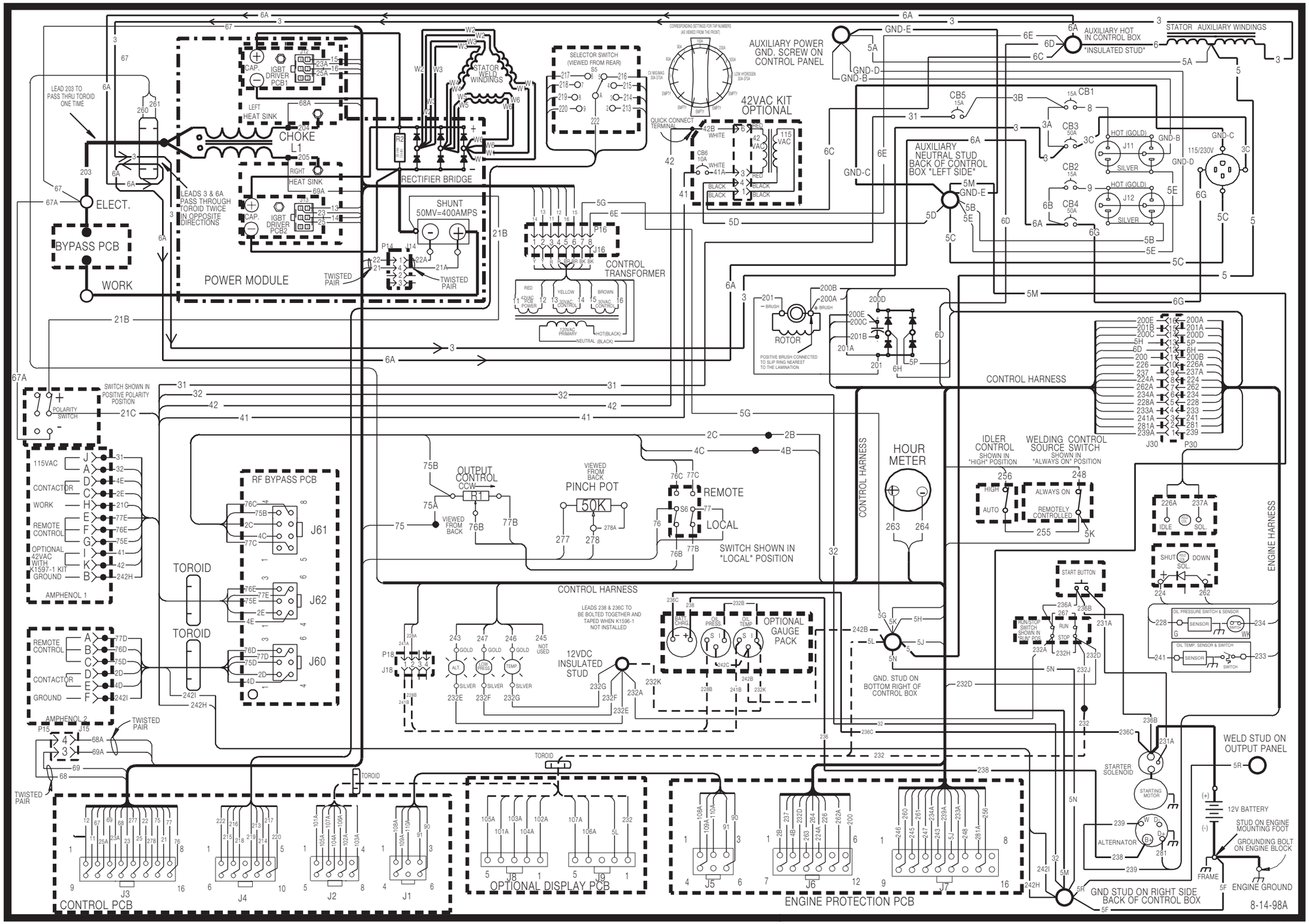

NOTE: This diagram is for reference only. It may not be accurate for all machines covered by this manual. The wiring diagram specific to your code is pasted inside one of the enclosure panels of your machine.

Return to Section TOC
Return to Master TOC
Return to Section TOC
Return to Master TOC
Return to Section TOC
Return to Master TOC

Return to Section TOC
Return to Master TOC

SCHEMATIC - CONTROL PC BOARD

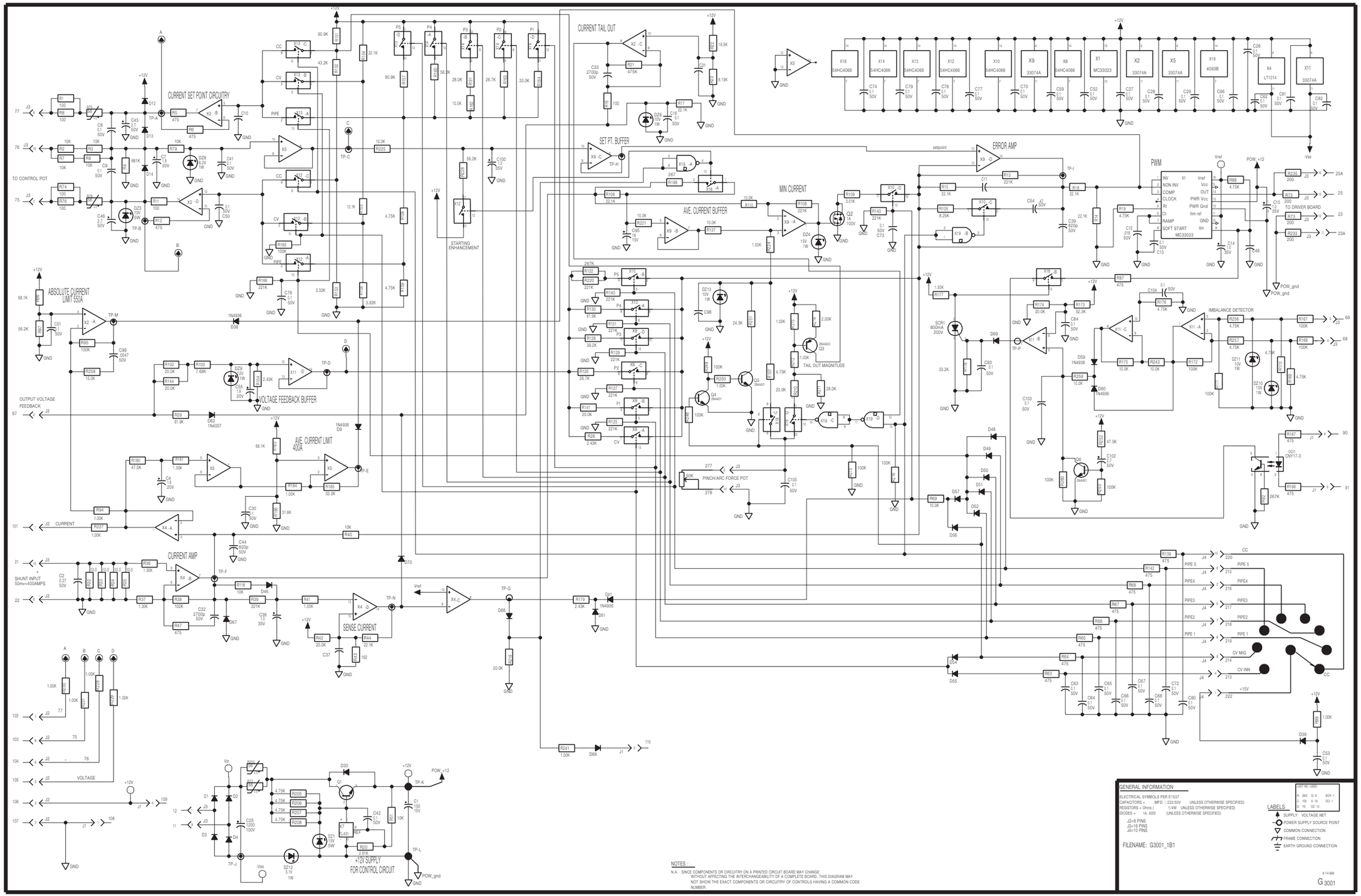

NOTES :
N.A. SINCE COMPONENTS OR CIRCUITRY ON A PRINTED CIRCUIT BOARD MAY CHANGE WITHOUT AFFECTING THE INTERCHANGEABILITY OF A COMPLETE BOARD, THIS DIAGRAM MAY NOT SHOW THE EXACT COMPONENTS OR CIRCUITRY OF CONTROLS HAVING A COMMON CODE NUMBER.

NOTE: This diagram is for reference only. It may not be accurate for all machines covered by this manual.

PC BOARD ASSEMBLY - CONTROL BOARD

ITEM	REQ'D	PART NO.	IDENTIFICATION
R177	1	S19400-1501	1.5K 1/4W
R178,R185	2	S19400-3322	33.2K 1/4W
R180,R252	2	S19400-4752	47.5K 1/4W
R186	1	S19400-3162	31.6K 1/4W
R198	1	S19400-2670	267 1/4W
R214	1	S19400-2001	2.0K 1/4W
R251	1	S19400-2432	24.3K 1/4W
R258	1	S19400-1502	15K 1/4W
X1	1	M15458-6	PWM CONTROLLER
X2,X5,X9,X11	4	S15128-18	IC,33074A,OP-AMP,QUA D,HIGH-PERF
X4	1	S15128-16	IC,LT1014,LINEAR INTEGRATED CIRCUIT
X7	1	S15128-10	IC,431,VOLTAGE REF.
X8,X10,X12,X13,X14,X18	6	S17900-22	IC,74HC4066,QUAD,ANALOG SWITCH (SS)
X19	1	S15018-15	14 PIN I.C. (SS)

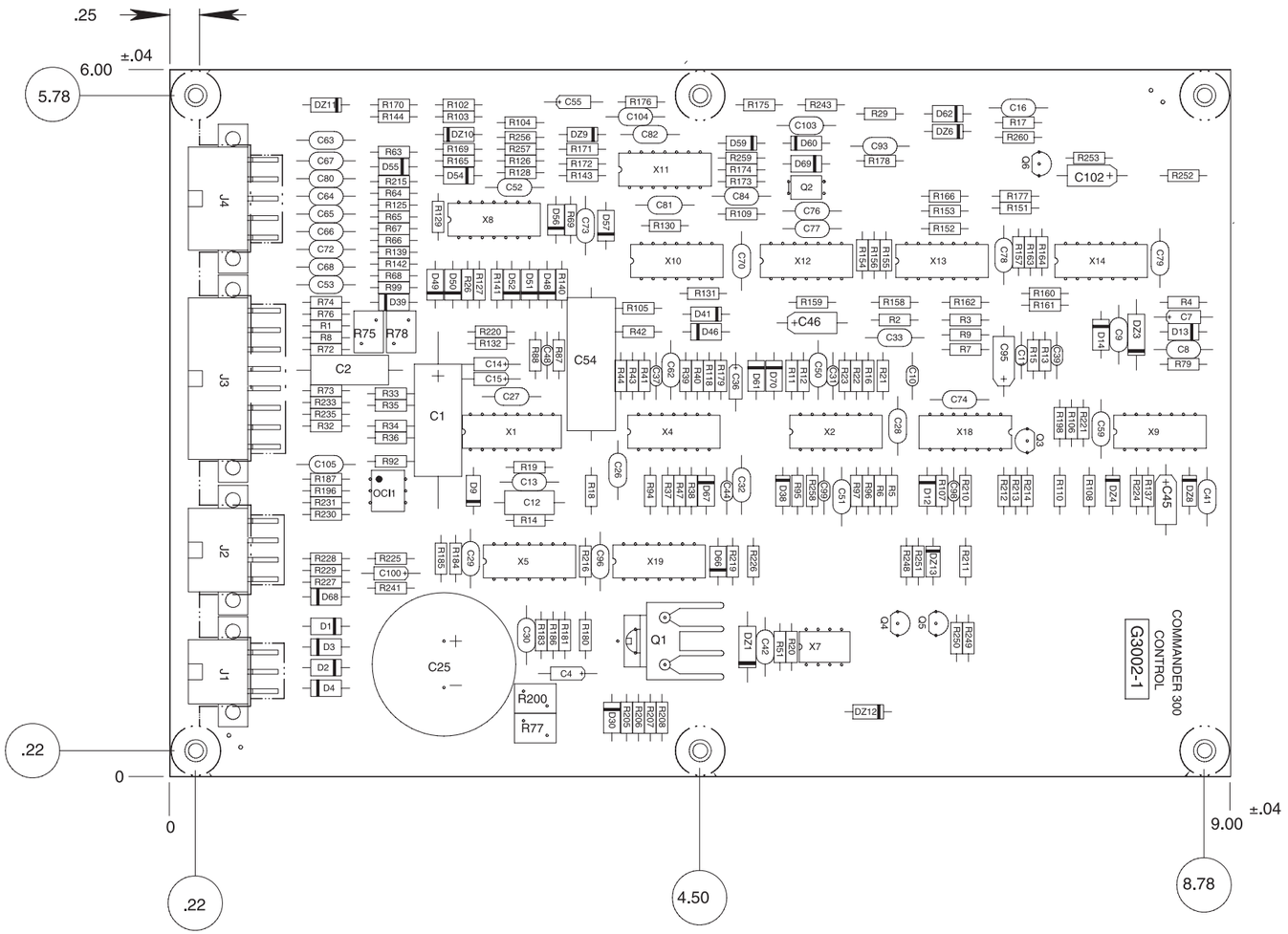

ITEM	REQ'D	PART NO.	IDENTIFICATION
1	1	G3351-B	P.C. BOARD BLANK
2	400 g	E2527	EPOXY ENCAPSULATION RESIN
C1	1	S13490-10	
C2	1	S13490-85	.27/50
C4,C7,C55	3	S13490-19	1.8/20
C8,C9,C13,C16,C26,C27,C28 C29,C30,C41,C42,C50,C51 C52,C53,C59,C62,C63,C64 C65,C66,C67,C68,C70,C72 C73,C74,C76,C77,C78,C79 C80,C81,C82,C84,C93,C96 C103,C104,C105	40	S16668-11	.1/50
C10,C11,C31,C37,C48,C98	6	S16668-5	.022/50
C12	1	S13490-126	.018/50V
C14,C15,C36,C100	4	S13490-42	1.0/35
C25	1	S13490-138	
C32,C33	2	S16668-4	2700pF/50
C39,C44	2	S16668-7	820pF/50
C45,C46,C102	3	S13490-40	2.7/50
C54	1	S13490-49	.47/50
C95	1	S13490-39	
C99	1	S16668-6	4700pF/50
D1,D2,D3,D4,D12,D13,D14 D30,D39,D46,D48,D49,D50 D51,D52,D54,D55,D56,D57 D61,D66,D67,D68,D69,D70	25	T12199-1	1N4004
D9,D38,D41,D59,D60	5	T12705-34	1N4936
D62	1	T12199-2	1N4007
DZ1	1	T12702-23	1N5352B
DZ3	1	T12702-33	1N5347B
DZ4	1	T12702-29	1N4744A
DZ6,DZ10,DZ11,DZ13	4	T12702-27	1N4740
DZ8	1	T12702-55	1N4738A
DZ9	1	T12702-19	1N4742A
DZ12	1	T12702-52	1N4733A
J1	1	S24016-6	HEADER,RT-ANGLE
J2	1	S24016-8	HEADER,RT-ANGLE
J3	1	S24016-16	HEADER,RT-ANGLE
J4	1	S24016-10	HEADER,RT-ANGLE
OCI1	1	S15000-10	OPTO ISOLATOR
Q1	1	S18395-31	TRANSISTOR H.S. ASSEMBLY
Q2	1	T12704-73	IC PKG MOSFET (SS)
Q3	1	T12704-69	2N4403
Q4,Q5,Q6	3	T12704-68	2N4401
R1,R8,R11,R16,R74,R76	6	S19400-1000	100 1/4W
R2,R3,R7,R9,R40,R51,R69 R79,R110,R118,R137,R162 R175,R221,R225,R243,R259	17	S19400-1002	10K 1/4W
R4	1	S19400-6813	681K 1/4W
R5,R6,R12,R47,R63,R64,R65 R66,R67,R68,R87,R139,R142 R187,R196	15	S19400-4750	475 1/4W
R13,R39,R108,R125,R127 R129,R131,R140,R143,R166 R220	11	S19400-2213	221K 1/4W
R14,R15,R17,R18,R44,R106 R154	7	S19400-2212	22.1K 1/4W
R19,R88,R107,R158,R159 R169,R170,R176,R205,R206 R207,R208,R256,R257	14	S19400-4751	4.75K
R20	1	S19400-2611	2.61K 1/4W
R21	1	S19400-4753	475K 1/4W
R22	1	S19400-1652	16.5K 1/4W
R23	1	S19400-6191	6.19K 1/4W
R26,R104,R179	3	S19400-2431	2.43K 1/4W
R29,R130	2	S19400-6192	61.9K
R32,R33,R34,R35	4	S19400-10R0	10 1/4W
R36,R37	2	S19400-1301	1.3K 1/4W
R38	1	S19400-1023	102K 1/4W
R41,R94,R99,R181,R184,R212 R213,R224,R227,R228,R229 R230,R231,R241,R250	15	S19400-1001	1K 1/4W
R42,R102,R141,R144,R164 R174,R210,R219	8	S19400-2002	20K 1/4W
R43	1	S19400-1620	162 1/4W
R72,R73,R233,R235	4	S19400-2000	200 1/4W
R75,R77,R78,R200	4	S18380-1	THERMISTOR,PTC,56 OHMS
R92,R132	2	S19400-2673	267K 1/4W
R95,R165,R171,R172,R215 R216,R248,R249,R253,R260	10	S19400-1003	100K 1/4W
R96,R183	2	S19400-6812	68.1K 1/4W
R97,R160,R226	3	S19400-5622	56.2K 1/4W
R103	1	S19400-7681	7.68K 1/4W
R105	1	S19400-8251	8.25K 1/4W
R109	1	S19400-3011	3.01K 1/4W
R126,R163	2	S19400-2672	26.7K 1/4W
R128	1	S19400-3922	39.2K 1/4W
R151,R157	2	S19400-9092	90.9K 1/4W
R152	1	S19400-4322	43.2K 1/4W
R153	1	S19400-3321	3.32K 1/4W
R155	1	S19400-1212	12.1K 1/4W
R156	1	S19400-3921	3.92K 1/4W
R161,R211	2	S19400-2802	28.0K 1/4W
R173	1	S19400-5232	52.3K 1/4W

Chg. Sheet No.		DESIGN INFORMATION	REFERENCE
5-18-2001A		DRAWN BY: SMB	
11-16-2001L		ENGINEER:	SUPERSEDING
		APPROVED:	5-14-97

EQUIPMENT TYPE: COMMANDER 300
SUBJECT: CONTROL P.C. BOARD ASSEMBLY
SCALE: FULL DATE: 11-1-2001 DRAWING No.: G3002-1

NOTE: Lincoln Electric assumes no responsibility for liabilities resulting from board level troubleshooting. PC board repairs will invalidate your factory warranty. **Individual Printed Circuit Board Components are not available from Lincoln Electric.** This information is provided for reference only. Lincoln Electric discourages board level troubleshooting and repair since it may compromise the quality of the design and may result in danger to the Machine Operator or Technician. Improper PC Board repairs could result in damage to the machine.

Return to Section TOC
Return to Master TOC

SCHEMATIC - ENGINE PROTECTION PC BOARD

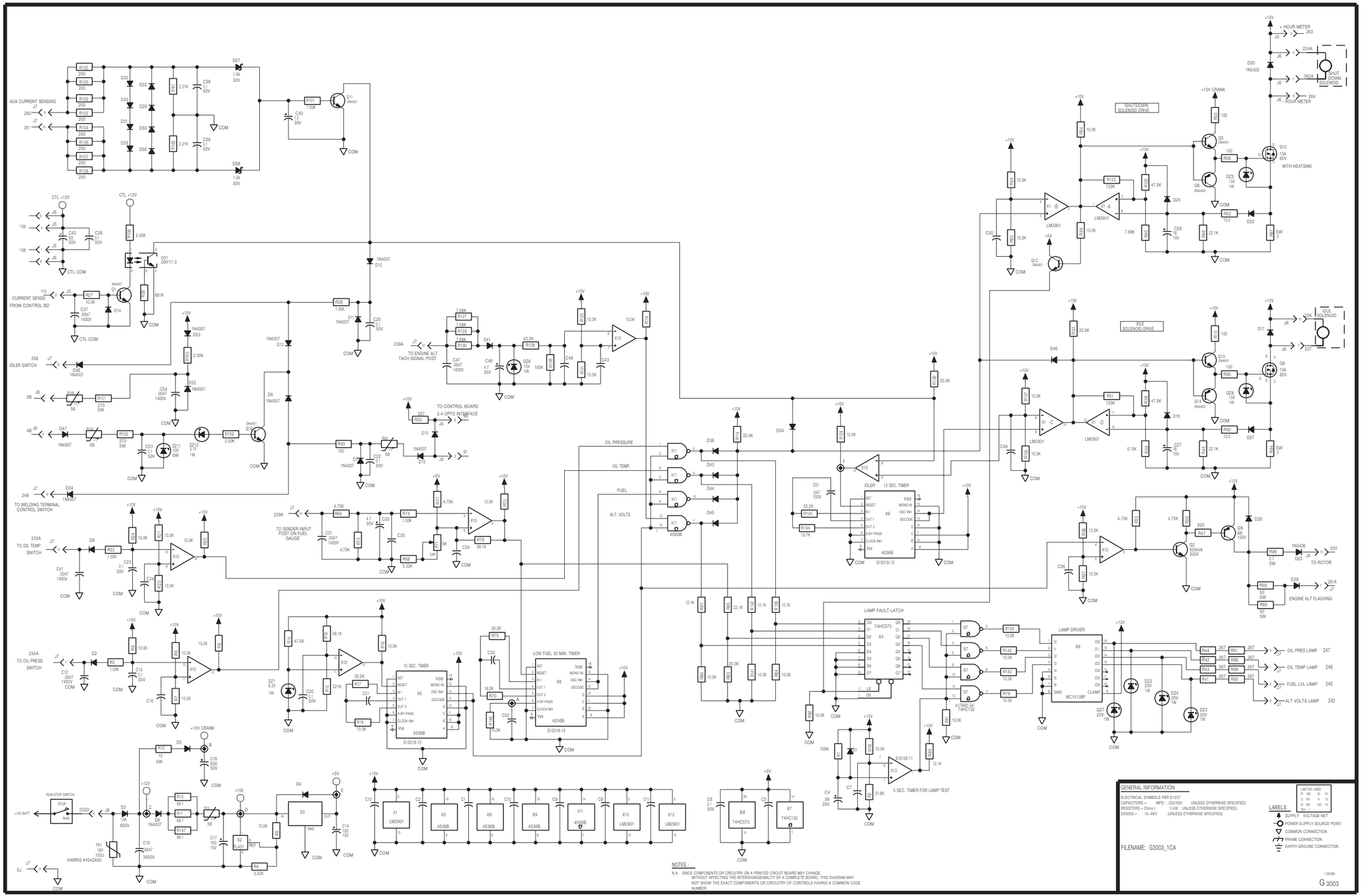

NOTE: This diagram is for reference only. It may not be accurate for all machines covered by this manual.

Return to Section TOC
Return to Master TOC

PC BOARD ASSEMBLY - ENGINE PROTECTION BOARD

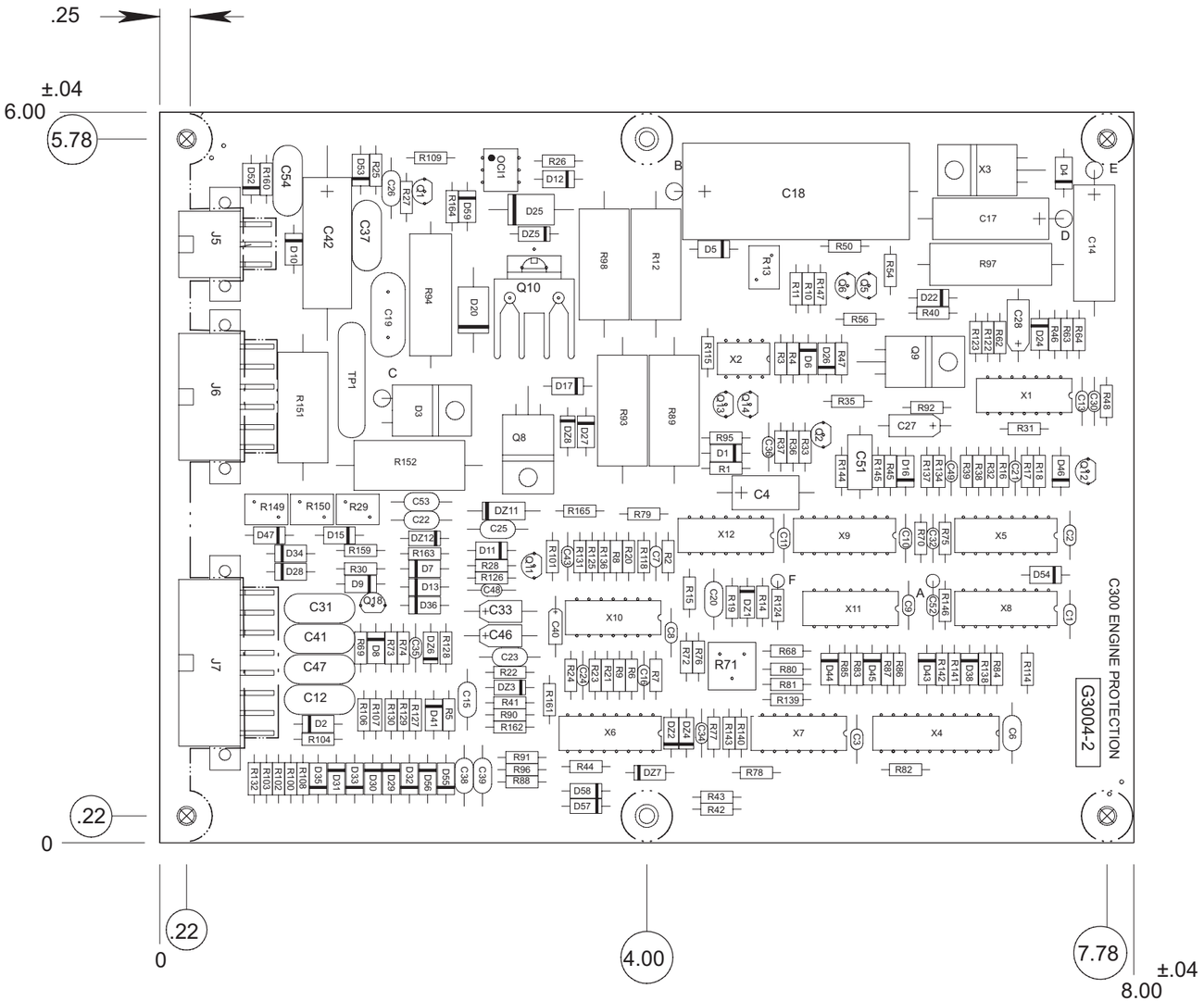

CAPACITORS = MFD/VOLTS
RESISTORS = OHMS

ITEM	REQ'D	PART NO.	IDENTIFICATION
C1,C2,C3,C7,C8,C9,C10,C11 C13,C16,C21,C24,C30,C32 C34,C35,C36,C43,C48,C49 C52	21	S16668-5	.022/50
C4	1	S13490-104	39uF/20V
C6,C15,C20,C22,C23,C25,C26 C38,C39,C53	10	S16668-11	.1/50
C12,C31,C37,C41,C47,C54	6	T11577-52	.0047 or .005/1400
C14,C17	2	S13490-15	100 /16
C18	1	T11577-49	500 /50
C19	1	T11577-58	.0047/3000V
C27,C28	2	S13490-39	18 /15
C33,C46	2	S13490-25	4.7/35
C40	1	S13490-42	1.0/35
C42	1	S13490-72	50 /50
C51	1	S13490-102	.047/100
D1,D2,D4,D5,D8,D10,D16,D17 D22,D24,D26,D27,D28,D29 D30,D31,D32,D33,D35,D38 D41,D43,D44,D45,D46,D54 D55,D56,D59	29	T12199-1	1N4004
D3	1	T12705-32	15A/600V
D6,D7,D9,D11,D12,D13,D15 D34,D36,D47,D52,D53	12	T12199-2	1N4007
D20	1	T12705-14	DIODE
D25	1	T12705-29	DIODE
D57,D58	2	T12705-23	1N5818
DZ1	1	T12702-40	1N4735
DZ2,DZ3,DZ4,DZ7	4	T12702-4	1N4747
DZ5,DZ6,DZ8	3	T12702-29	1N4744A
DZ11	1	T12702-33	1N5347B
DZ12	1	T12702-52	1N4733A
J5	1	S24016-6	HEADER,RT-ANGLE
J6	1	S24016-12	HEADER,RT-ANGLE
J7	1	S24016-16	HEADER,RT-ANGLE
OCI1	1	S15000-10	OPTO ISOLATOR
Q1,Q5,Q11,Q12,Q13,Q18	6	T12704-68	2N4401
Q2	1	T12704-35	NPN TRANSISTOR
Q6,Q14	2	T12704-69	2N4403
Q8	1	T12704-54	N-CHANNEL FET (SS)
Q9	1	T12704-49	8A. 150V. PNP TRANSISTOR
Q10	1	S18395-30	H.S. ASBLY (SS)
R1,R126,R165	3	S19400-1003	100K 1/4W
R2	1	S19400-3162	31.6K 1/4W
R3,R6,R7,R8,R9,R16,R18,R20 R21,R23,R24,R27,R36,R37 R48,R54,R63,R64,R72,R78 R79,R81,R82,R84,R86,R118 R124,R125,R134,R137,R139 R140,R141,R143,R146	35	S19400-1002	10K 1/4W
R4,R68	2	S19400-3321	3.32K 1/4W
R5,R22,R28,R74,R101	5	S19400-1001	1K 1/4W
R10,R11,R147	3	S19400-68R1	68.1 1/4W
R12	1	T14648-25	10 5W
R13,R29,R149,R150	4	S18380-1	THERMISTOR,PTC,56 OHMS
R14,R38,R122	3	S19400-4752	47.5K 1/4W
R15	1	S19400-2213	221K 1/4W
R17,R75,R145	3	S19400-3322	33.2K 1/4W
R19,R76	2	S19400-6812	68.1K 1/4W
R25	1	S19400-3570	357 1/4W
R26	1	S19400-6813	681K 1/4W
R30,R50,R56,R95,R115	5	S19400-1000	100 1/4W
R31,R123	2	S19400-1333	133K 1/4W
R32,R83,R114,R136	4	S19400-2002	20K 1/4W
R33,R35,R69,R73,R77	5	S19400-4751	4.75K
R39	1	S19400-6191	6.19K 1/4W
R40,R127,R129,R130	4	S19400-7681	7.68K 1/4W
R41,R42,R43,R44,R88,R90 R91,R96	8	S19400-2670	267 1/4W
R45,R46,R85,R163,R164	5	S19400-2212	22.1K 1/4W
R47,R100,R102,R103,R104 R106,R107,R108,R132	9	S19400-2000	200 1/4W
R62,R92	2	S19400-10R0	10 1/4W
R70	1	S19400-1822	18.2K 1/4W
R71	1	T10812-36	5K 1/2W TRIMMER
R80,R87,R138,R142	4	S19400-1212	12.1K 1/4W
R89,R93	2	T14648-22	50 5W
R94,R97	2	T12300-81	5 WATT 0.5+/-1% OHM RESISTOR
R98	1	T14648-21	2.7 5W
R109	1	S19400-2431	2.43K 1/4W
R128	1	S19400-4322	43.2K 1/4W
R131	1	S19400-1502	15K 1/4W
R144	1	S19400-1372	13.7K 1/4W
R151,R152	2	T14648-17	270 5W
R159,R160	2	S19400-2001	2.0K 1/4W
R161,R162	2	S19400-2211	2.21K 1/4W
TP1	1	T13640-26	18V/100J MOV
X1,X10,X12	3	S15128-11	14 PIN QUAD COMPARATOR
X2	1	S15128-10	IC,431,VOLTAGE REF.
X3	1	S15128-5	+5V REG.
X4	1	S17900-25	IC,74HC573A,CMOS,LATCH,3-STATE (SS)
X5,X8,X9	3	S15018-13	16 PIN I.C. (SS)
X6	1	M15102-4	IC,MC1413,ARRAY,DRIVER,PERIPHERAL(SS)
X7	1	S17900-24	IC,74HC132,CMOS,GATE,NAND,2-IN,ST(SS)
X11	1	S15018-15	14 PIN I.C. (SS)

Chg. Sheet No.	DESIGN INFORMATION	REFERENCE	EQUIPMENT TYPE: COMMANDER 300
5-18-2001A	DRAWN BY: SWB		SUBJECT: ENGINE PROTECTION P.C. BOARD ASSEMBLY
11-16-2001L	ENGINEER:	SUPERSEDING:	SCALE: FULL DATE: 11-1-2001 DRAWING No.: G3004-2
	APPROVED:	4-17-2001	

NOTE: Lincoln Electric assumes no responsibility for liabilities resulting from board level troubleshooting. PC board repairs will invalidate your factory warranty. **Individual Printed Circuit Board Components are not available from Lincoln Electric.** This information is provided for reference only. Lincoln Electric discourages board level troubleshooting and repair since it may compromise the quality of the design and may result in danger to the Machine Operator or Technician. Improper PC Board repairs could result in damage to the machine.

Return to Section TOC
Return to Master TOC

SCHEMATIC - CHOPPER PC BOARD

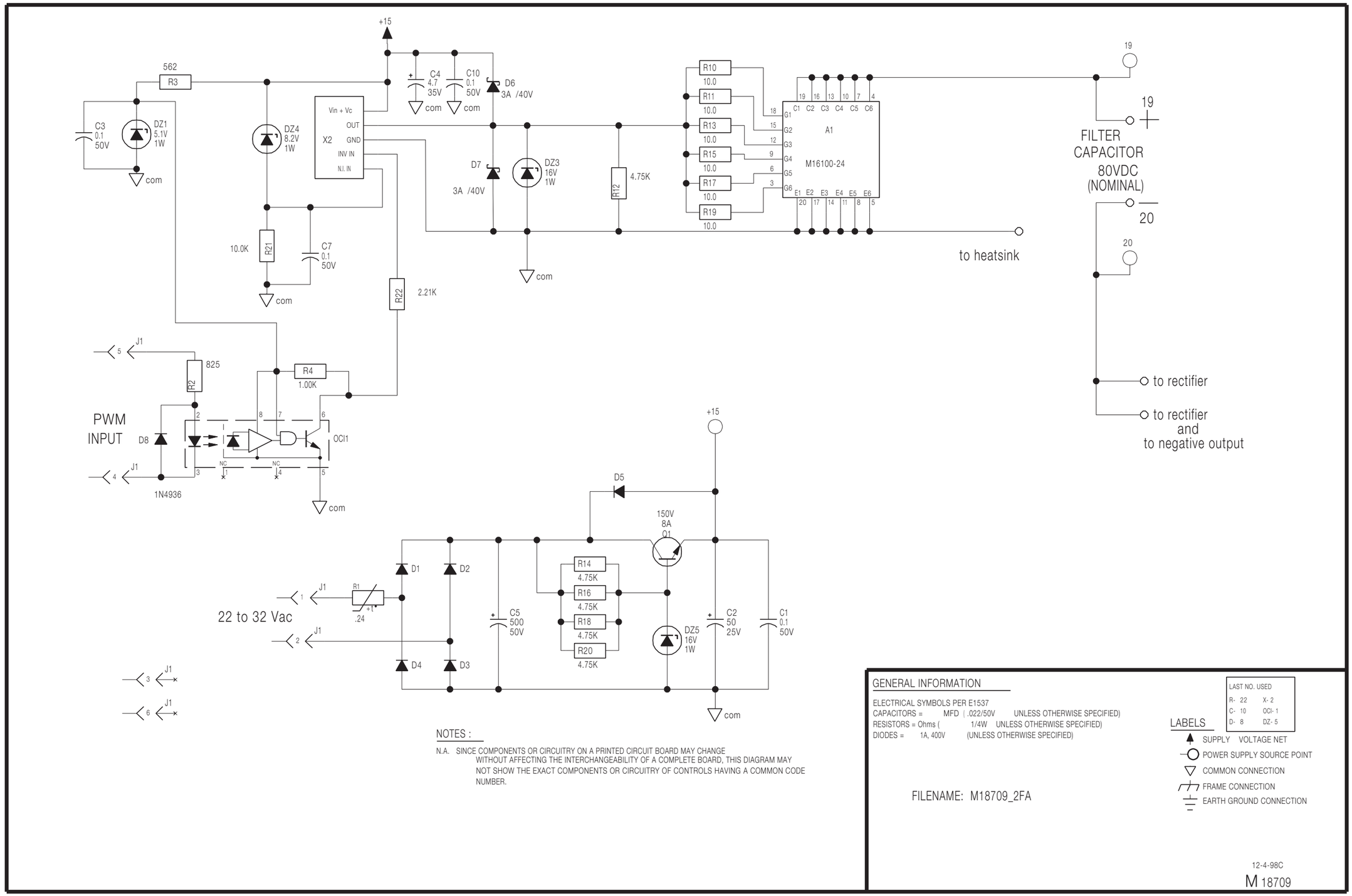

NOTES :

N.A. SINCE COMPONENTS OR CIRCUITRY ON A PRINTED CIRCUIT BOARD MAY CHANGE WITHOUT AFFECTING THE INTERCHANGEABILITY OF A COMPLETE BOARD, THIS DIAGRAM MAY NOT SHOW THE EXACT COMPONENTS OR CIRCUITRY OF CONTROLS HAVING A COMMON CODE NUMBER.

GENERAL INFORMATION

ELECTRICAL SYMBOLS PER E1537
CAPACITORS = MFD (.022/50V UNLESS OTHERWISE SPECIFIED)
RESISTORS = Ohms (1/4W UNLESS OTHERWISE SPECIFIED)
DIODES = 1A, 400V (UNLESS OTHERWISE SPECIFIED)

LAST NO. USED

R-	22	X-	2
C-	10	OCI-	1
D-	8	DZ-	5

LABELS

- SUPPLY VOLTAGE NET
- POWER SUPPLY SOURCE POINT
- COMMON CONNECTION
- FRAME CONNECTION
- EARTH GROUND CONNECTION

FILENAME: M18709_2FA

12-4-98C
M 18709

NOTE: This diagram is for reference only. It may not be accurate for all machines covered by this manual.

Return to Section TOC
Return to Master TOC

PC BOARD ASSEMBLY - CHOPPER BOARD

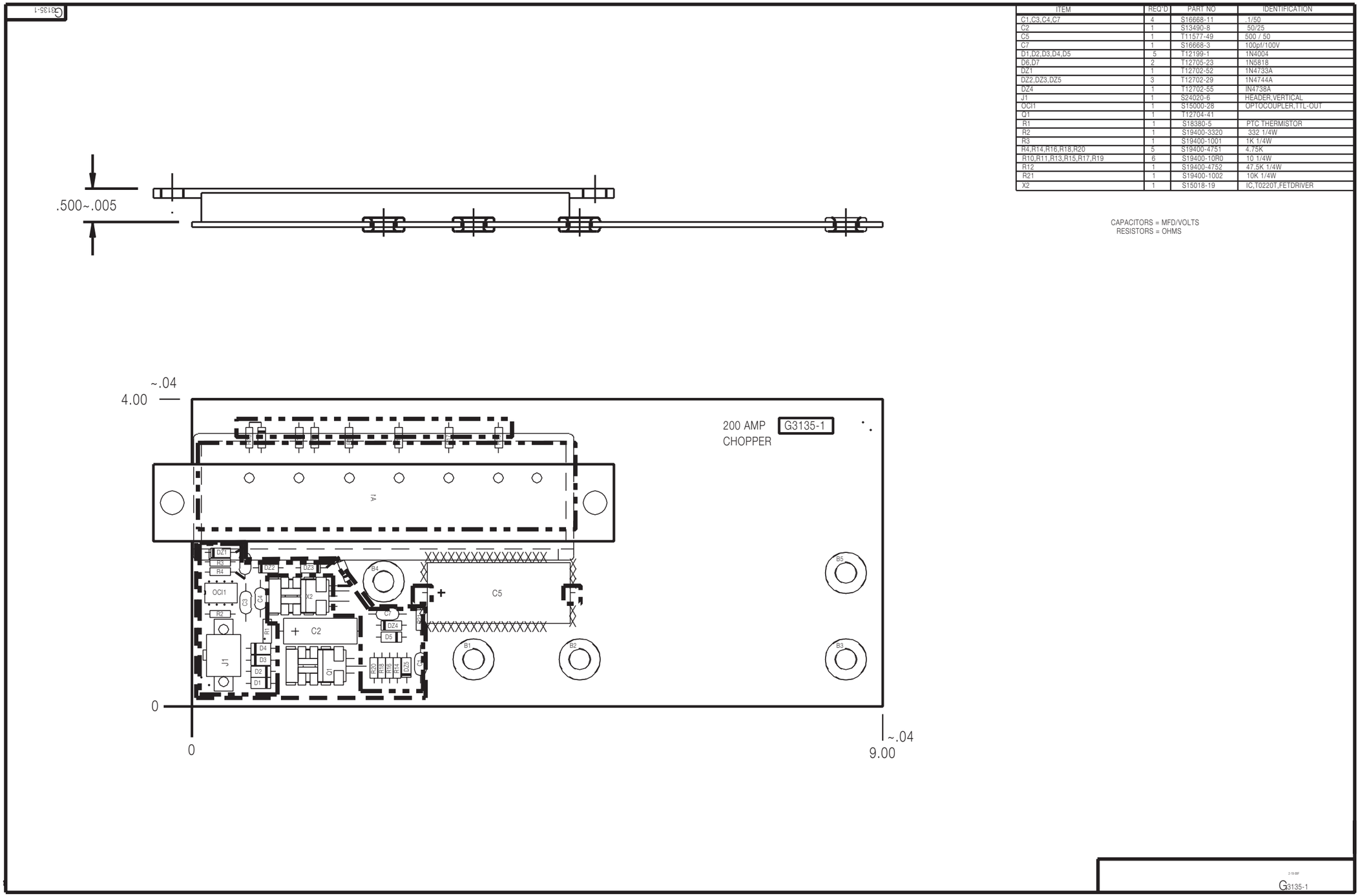

ITEM	REQ'D	PART NO	IDENTIFICATION
C1,C3,C4,C7	4	S16668-11	.1/50
C2	1	S13490-8	50/25
C5	1	T11577-49	500 / 50
C7	1	S16668-3	100pf/100V
D1,D2,D3,D4,D5	5	T12199-1	1N4004
D6,D7	2	T12705-23	1N5818
DZ1	1	T12702-52	1N4733A
DZ2,DZ3,DZ5	3	T12702-29	1N4744A
DZ4	1	T12702-55	IN4738A
J1	1	S24020-6	HEADER,VERTICAL
OCI1	1	S15000-28	OPTOCOUPLER,TTL-OUT
Q1	1	T12704-41	
R1	1	S18380-5	PTC THERMISTOR
R2	1	S19400-3320	332 1/4W
R3	1	S19400-1001	1K 1/4W
R4,R14,R16,R18,R20	5	S19400-4751	4.75K
R10,R11,R13,R15,R17,R19	6	S19400-10R0	10 1/4W
R12	1	S19400-4752	47.5K 1/4W
R21	1	S19400-1002	10K 1/4W
X2	1	S15018-19	IC,TO220T,FETDRIVER

CAPACITORS = MFD/VOLTS
RESISTORS = OHMS

NOTE: Lincoln Electric assumes no responsibility for liabilities resulting from board level troubleshooting. PC board repairs will invalidate your factory warranty. **Individual Printed Circuit Board Components are not available from Lincoln Electric.** This information is provided for reference only. Lincoln Electric discourages board level troubleshooting and repair since it may compromise the quality of the design and may result in danger to the Machine Operator or Technician. Improper PC Board repairs could result in damage to the machine.

Return to Section TOC
Return to Master TOC
Return to Section TOC
Return to Master TOC
Return to Section TOC
Return to Master TOC

SCHEMATIC - METER PC BOARD

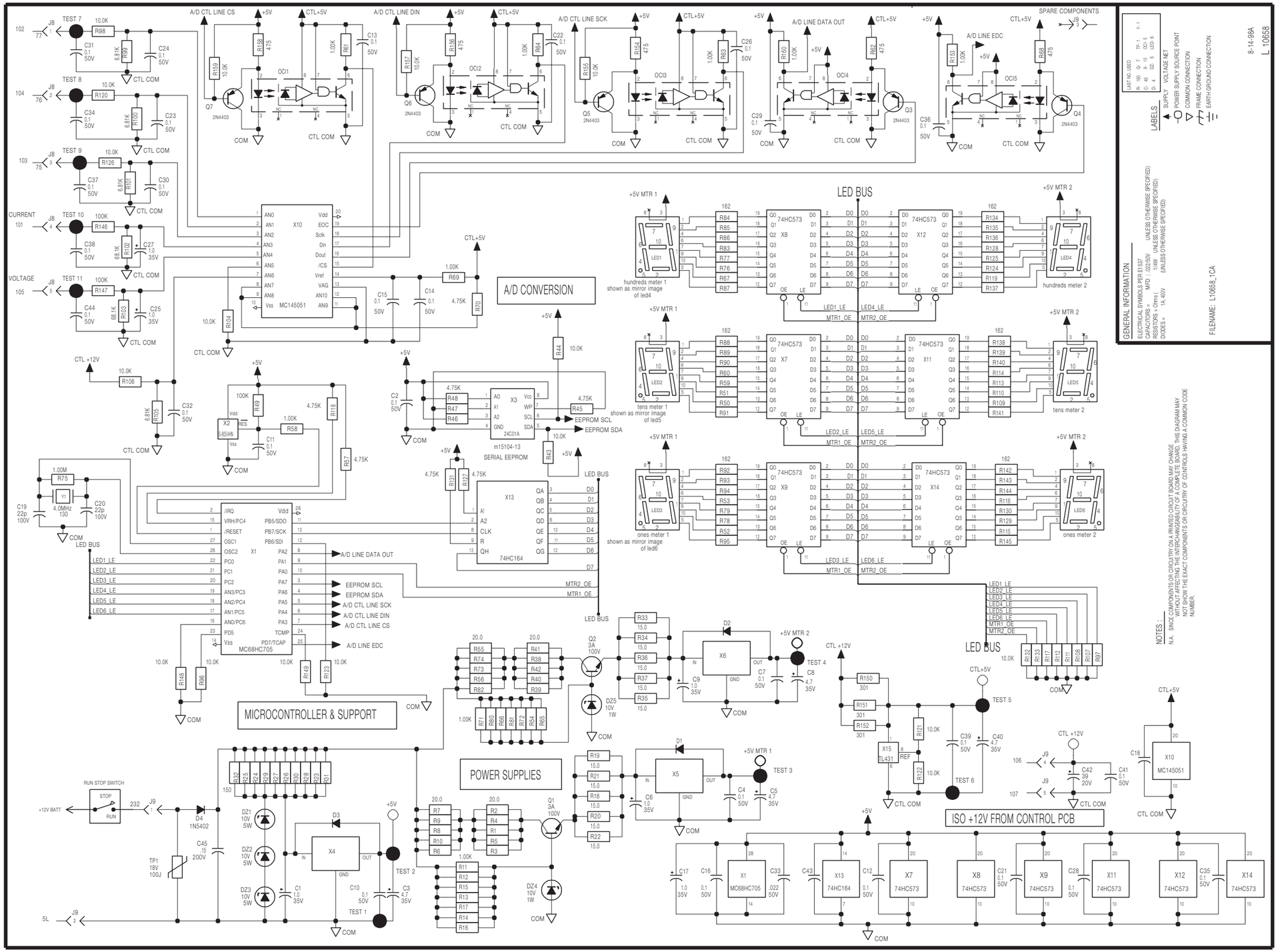

NOTE: This diagram is for reference only. It may not be accurate for all machines covered by this manual.

PC BOARD ASSEMBLY - METER BOARD

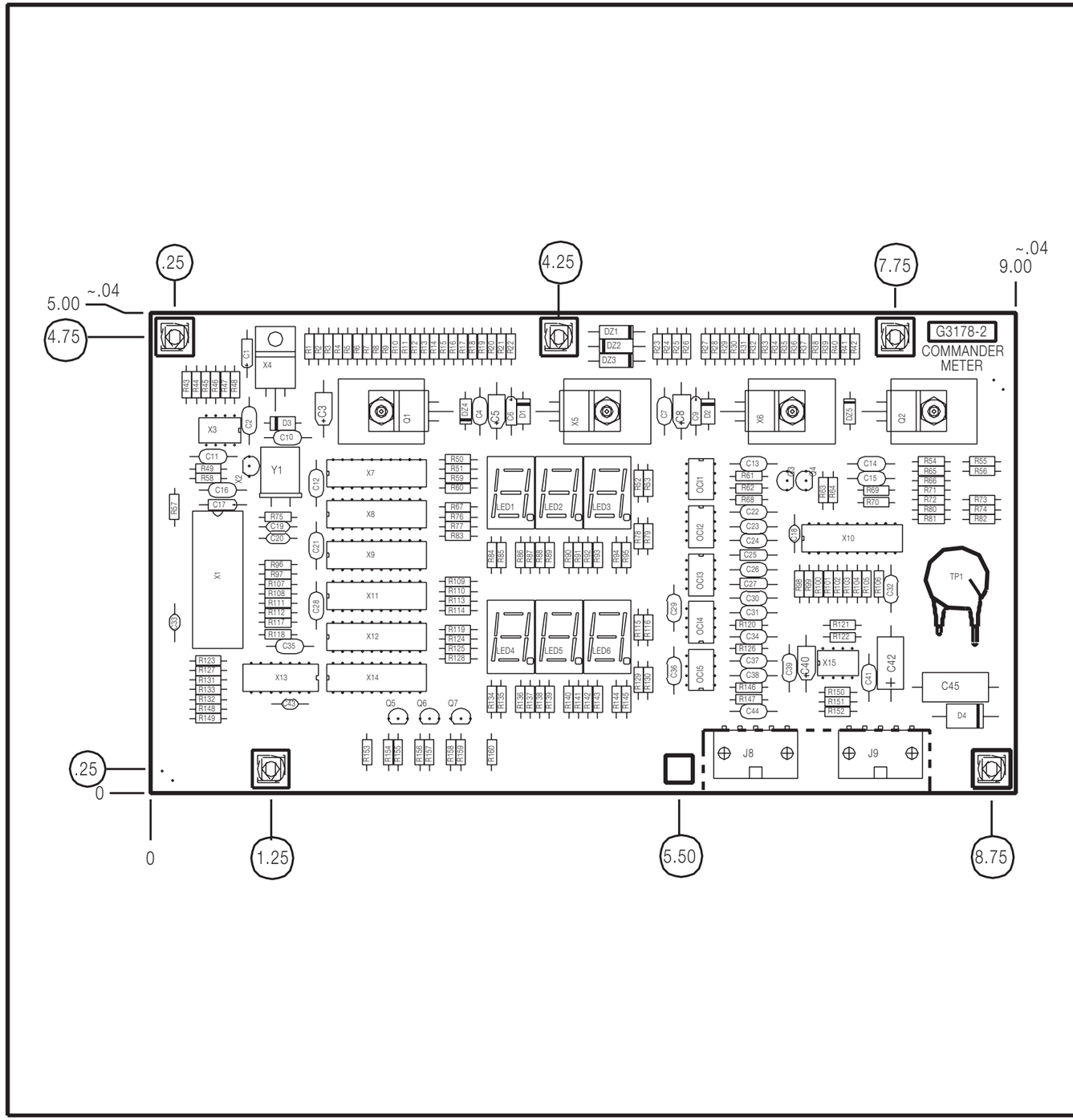

ITEM	REQ'D	PART NO.	DESCRIPTION
C1,C6,C9,C17,C25,C27	6	S13490-42	1.0/35
C2,C4,C7,C10,C11,C12,C13 C14,C15,C16,C21,C22,C23 C24,C26,C28,C29,C30,C31 C32,C34,C35,C36,C37,C38 C39,C41,C44	28	S16668-11	.1/50
C3,C5,C8,C40	4	S13490-25	4.7/35
C18,C33,C43	3	S16668-5	.022/50
C19,C20	2	S16668-1	22pF/100
C42	1	S13490-104	39uF/20V
C45	1	S13490-96	.15/200
D1,D2,D3	3	T12199-1	1N4004
D4	1	T12705-14	DIODE
DZ1,DZ2,DZ3	3	T12702-33	1N5347B
DZ4,DZ5	2	T12702-27	1N4740
J8,J9	2	S22025-5	CONNECTOR,MOLEX,MINI,RT-L
LED1,LED2,LED3,LED4,LED5 LED6	6	S17395-5	LED DISPLAY
OC1,OC2,OC3,OC4,OC5	5	S15000-28	OPTOCOUPLER,TTL-OUT
Q1,Q2	2	T12704-62	TRANSISTOR
Q5,Q4,Q5,Q6,Q7	5	T12704-69	2N4403
R1,R2,R3,R4,R5,R6,R7,R8,R9 R10,R38,R39,R40,R41,R42 R55,R56,R73,R74,R82	20	S19400-20R0	20 1/4W
R11,R12,R13,R14,R15,R16 R17,R54,R58,R61,R63,R64 R65,R66,R69,R71,R72,R80 R81,R153,R160	21	S19400-1001	1K 1/4W
R18,R19,R20,R21,R22,R33 R34,R35,R36,R37	10	S19400-15R0	15 1/4W
R23,R24,R25,R26,R27,R28 R29,R30,R31,R32	10	S19400-1500	150 1/4W
R43,R44,R96,R97,R98,R104 R106,R107,R108,R111,R112 R117,R120,R121,R122,R123 R126,R132,R133,R148,R149 R155,R157,R159	24	S19400-1002	10K 1/4W
R45,R46,R47,R48,R57,R70 R118,R127,R131	9	S19400-4751	4.75K
R49,R146,R147	3	S19400-1003	100K 1/4W
R50,R51,R52,R53,R59,R60 R67,R76,R77,R78,R79,R83 R84,R85,R86,R87,R88,R89 R90,R91,R92,R93,R94,R95 R109,R110,R113,R114,R115 R116,R119,R124,R125,R128 R129,R130,R134,R135,R136 R137,R138,R139,R140,R141 R142,R143,R144,R145	48	S19400-1620	162 1/4W
R62,R68,R154,R156,R158	5	S19400-4750	475 1/4W
R75	1	S19400-1004	1M 1/4W
R99,R100,R101,R105	4	S19400-6811	6.81K 1/4W
R102,R103	2	S19400-6812	68.1K 1/4W
R150,R151,R152	3	S19400-3010	301 1/4W
TP1	1	T13640-26	18V/100J MOV
X1	1	S24214-2	ROM ASSEMBLY(SS)
X2	1	M15102-3	IC,S8054HN,UNDERVOLT. SENSING CIR. (SS)
X3	1	M15104-13	IC,24C01A,CMOS,EEPROM (SS)
X4	1	S15128-5	+5V REG.
X5,X6	2	S15128-5	+5 V REG.
X7,X8,X9,X11,X12,X14	6	S17900-25	IC,74HC573A,CMOS,LATCH,3-STATE (SS)
X10	1	M15105-7	IC,CMOS,MPU,A/D,10-BIT(SS)
X13	1	S17900-9	14 PIN I.C. (SS)
X15	1	S15128-10	IC,431,VOLTAGE REF.
Y1	1	S16665-2	4.0 MHz

NOTE: Lincoln Electric assumes no responsibility for liabilities resulting from board level troubleshooting. PC board repairs will invalidate your factory warranty. **Individual Printed Circuit Board Components are not available from Lincoln Electric.** This information is provided for reference only. Lincoln Electric discourages board level troubleshooting and repair since it may compromise the quality of the design and may result in danger to the Machine Operator or Technician. Improper PC Board repairs could result in damage to the machine.

SCHEMATIC - BYPASS PC BOARD

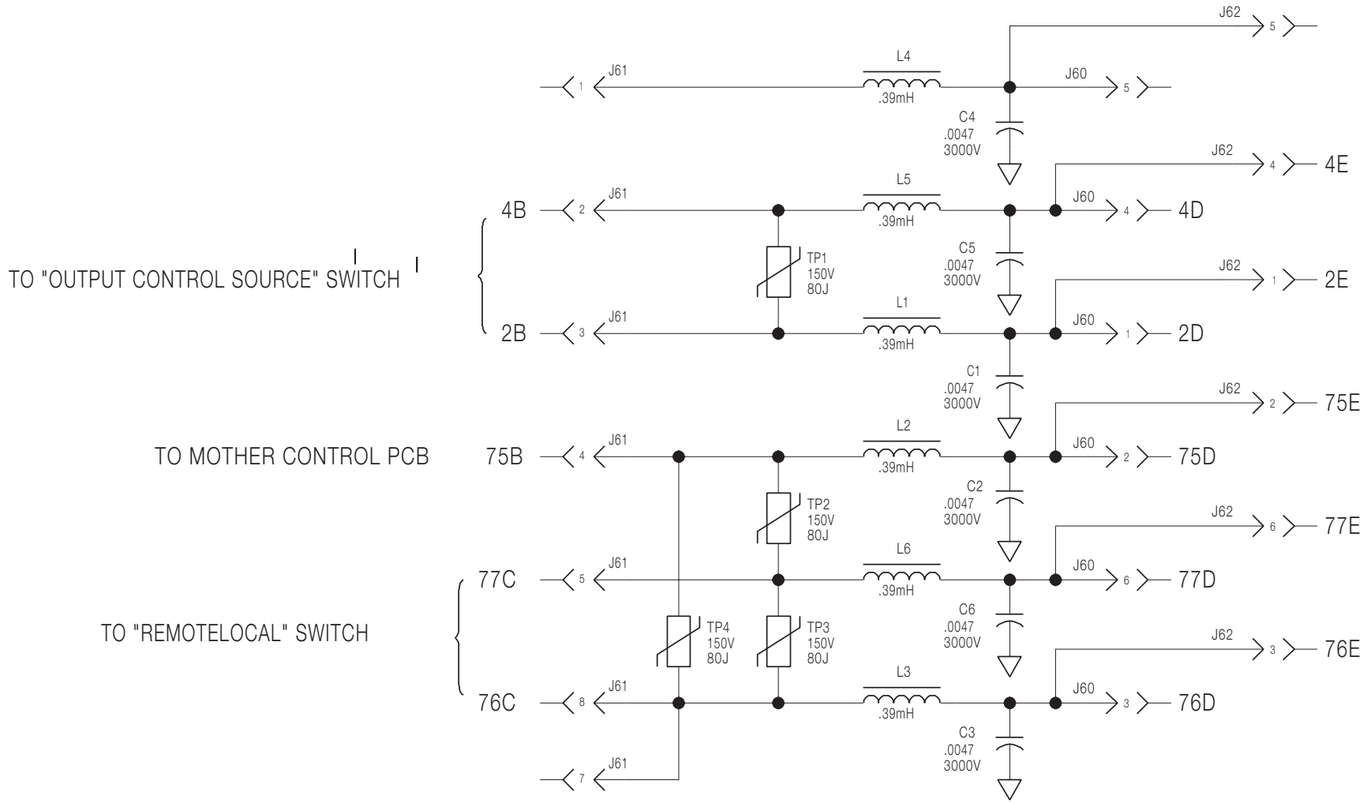

NOTES :

N.A. SINCE COMPONENTS OR CIRCUITRY ON A PRINTED CIRCUIT BOARD MAY CHANGE WITHOUT AFFECTING THE INTERCHANGEABILITY OF A COMPLETE BOARD, THIS DIAGRAM MAY NOT SHOW THE EXACT COMPONENTS OR CIRCUITRY OF CONTROLS HAVING A COMMON CODE NUMBER.

GENERAL INFORMATION

ELECTRICAL SYMBOLS PER E1537
CAPACITORS = MFD (.022/50V UNLESS OTHERWISE SPECIFIED)
RESISTORS = Ohms (1/4W UNLESS OTHERWISE SPECIFIED)
DIODES = 1A, 400V (UNLESS OTHERWISE SPECIFIED)

LAST NO. USED
R- _
C- 6
L- 6

LABELS
SUPPLY VOLTAGE NET
POWER SUPPLY SOURCE POINT
COMMON CONNECTION
FRAME CONNECTION
EARTH GROUND CONNECTION

FILENAME: M18948_1AA

8-14-98
M18948

NOTE: This diagram is for reference only. It may not be accurate for all machines covered by this manual.

Return to Section TOC
Return to Master TOC

PC BOARD ASSEMBLY - BYPASS BOARD

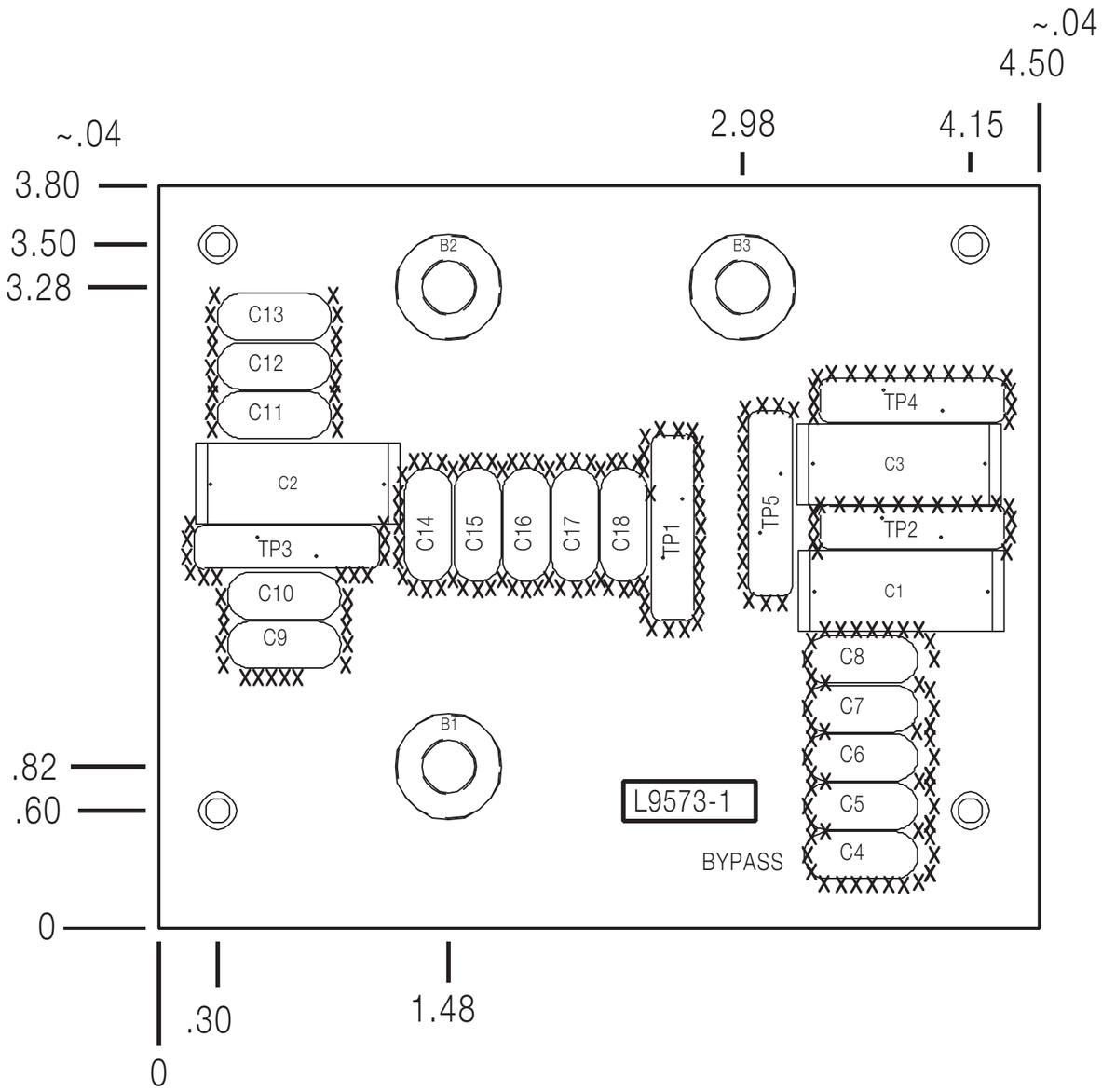

ITEM	REQ'D	PART NO.	IDENTIFICATION
C1,C2,C3	3	S20500-3	.22/400V
C4,C5,C6,C7,C8,C9,C10,C11 C12,C13,C14,C15,C16,C17,C18	15	T11577-52	.0047 or .005/1400
TP1,TP2,TP3,TP4,TP5	5	T13640-16	80J

10-11-968

L 9573-1

CAPACITORS = MFD/VOLTS
INDUCTANCE = HENRYS

NOTE: Lincoln Electric assumes no responsibility for liabilities resulting from board level troubleshooting. PC board repairs will invalidate your factory warranty. **Individual Printed Circuit Board Components are not available from Lincoln Electric.** This information is provided for reference only. Lincoln Electric discourages board level troubleshooting and repair since it may compromise the quality of the design and may result in danger to the Machine Operator or Technician. Improper PC Board repairs could result in damage to the machine.

Return to Section TOC
Return to Master TOC
Return to Section TOC
Return to Master TOC
Return to Section TOC
Return to Master TOC

Return to Section TOC
Return to Master TOC
Return to Section TOC
Return to Master TOC
Return to Section TOC
Return to Master TOC
Return to Section TOC
Return to Master TOC

SVM ERROR REPORTING FORM

We need to know if there are errors in our manuals. We also value any suggestions as to additional tests or procedures that would make this SVM a better tool for you.

If you discover new or different “Problems or Symptoms” that are not covered in the three column troubleshooting chart, please share this information with us. Please include the machine’s code number and how the problem was resolved.

Thank You,
Technical Services Group
Lincoln Electric Co.
22801 ST. Clair Ave.
Cleveland, Ohio 44117-1199

FAX 216-481-2309

SVM Number _____

Page Number if necessary_____

Your Company_____

Your Name_____

Please give detailed description below:

_____
_____
_____
_____
_____
_____
_____
_____
_____
_____
_____
_____

SD287 01/99

LINCOLN ELECTRIC