Operator's Manual

POWER WAVE® 300C

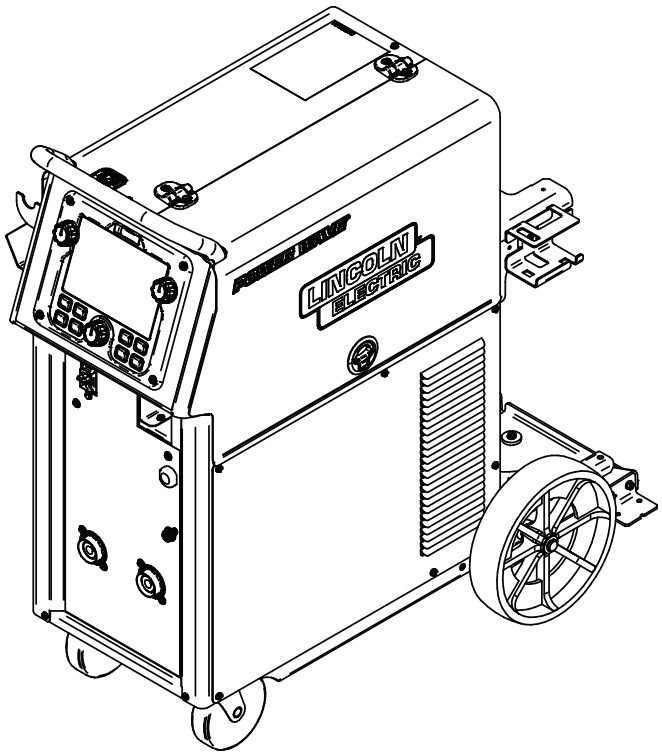

For use with machines having Code Numbers:

12942, 12943, 12944, 12945, 13200, 13406, 13407, 13541, 13542, 13630

GENUINE LINCOLN PARTS™

Register your machine:
www.lincolnelectric.com/register

Authorized Service and Distributor Locator:
www.lincolnelectric.com/locator

Save for future reference

Date Purchased

Code: (ex: 10859)

Serial: (ex: U1060512345)

IM10591-D | Issue Date Apr - 24

© Lincoln Global, Inc. All Rights Reserved.

THE LINCOLN ELECTRIC COMPANY
22801 St. Clair Avenue • Cleveland, OH • 44117-1199 • U.S.A.
Phone: +1.216.481.8100 • www.lincolnelectric.com

THANK YOU FOR SELECTING A QUALITY PRODUCT BY LINCOLN ELECTRIC.

PLEASE EXAMINE CARTON AND EQUIPMENT FOR DAMAGE IMMEDIATELY

When this equipment is shipped, title passes to the purchaser upon receipt by the carrier. Consequently, claims for material damaged in shipment must be made by the purchaser against the transportation company at the time the shipment is received.

SAFETY DEPENDS ON YOU

Lincoln arc welding and cutting equipment is designed and built with safety in mind. However, your overall safety can be increased by proper installation ... and thoughtful operation on your part. **DO NOT INSTALL, OPERATE OR REPAIR THIS EQUIPMENT WITHOUT READING THIS MANUAL AND THE SAFETY PRECAUTIONS CONTAINED THROUGHOUT.** And, most importantly, think before you act and be careful.

⚠ WARNING

This statement appears where the information must be followed exactly to avoid serious personal injury or loss of life.

⚠ CAUTION

This statement appears where the information must be followed to avoid minor personal injury or damage to this equipment.

KEEP YOUR HEAD OUT OF THE FUMES.

DON'T get too close to the arc. Use corrective lenses if necessary to stay a reasonable distance away from the arc.

READ and obey the Safety Data Sheet (SDS) and the warning label that appears on all containers of welding materials.

USE ENOUGH VENTILATION or exhaust at the arc, or both, to keep the fumes and gases from your breathing zone and the general area.

IN A LARGE ROOM OR OUTDOORS, natural ventilation may be adequate if you keep your head out of the fumes (See below).

USE NATURAL DRAFTS or fans to keep the fumes away from your face.

If you develop unusual symptoms, see your supervisor. Perhaps the welding atmosphere and ventilation system should be checked.

WEAR CORRECT EYE, EAR & BODY PROTECTION

PROTECT your eyes and face with welding helmet properly fitted and with proper grade of filter plate (See ANSI Z49.1).

PROTECT your body from welding spatter and arc flash with protective clothing including woolen clothing, flame-proof apron and gloves, leather leggings, and high boots.

PROTECT others from splatter, flash, and glare with protective screens or barriers.

IN SOME AREAS, protection from noise may be appropriate.

BE SURE protective equipment is in good condition.

Also, wear safety glasses in work area **AT ALL TIMES.**

SPECIAL SITUATIONS

DO NOT WELD OR CUT containers or materials which previously had been in contact with hazardous substances unless they are properly cleaned. This is extremely dangerous.

DO NOT WELD OR CUT painted or plated parts unless special precautions with ventilation have been taken. They can release highly toxic fumes or gases.

Additional precautionary measures

PROTECT compressed gas cylinders from excessive heat, mechanical shocks, and arcs; fasten cylinders so they cannot fall.

BE SURE cylinders are never grounded or part of an electrical circuit.

REMOVE all potential fire hazards from welding area.

ALWAYS HAVE FIRE FIGHTING EQUIPMENT READY FOR IMMEDIATE USE AND KNOW HOW TO USE IT.

SECTION A: WARNINGS

CALIFORNIA PROPOSITION 65 WARNINGS

WARNING: Breathing diesel engine exhaust exposes you to chemicals known to the State of California to cause cancer and birth defects, or other reproductive harm.

- Always start and operate the engine in a well-ventilated area.
- If in an exposed area, vent the exhaust to the outside.
- Do not modify or tamper with the exhaust system.
- Do not idle the engine except as necessary.

For more information go to www.P65 warnings.ca.gov/diesel

WARNING: This product, when used for welding or cutting, produces fumes or gases which contain chemicals known to the State of California to cause birth defects and, in some cases, cancer. (California Health & Safety Code § 25249.5 *et seq.)*

WARNING: Cancer and Reproductive Harm www.P65warnings.ca.gov

ARC WELDING CAN BE HAZARDOUS. PROTECT YOURSELF AND OTHERS FROM POSSIBLE SERIOUS INJURY OR DEATH. KEEP CHILDREN AWAY. PACEMAKER WEARERS SHOULD CONSULT WITH THEIR DOCTOR BEFORE OPERATING.

Read and understand the following safety highlights. For additional safety information, it is strongly recommended that you purchase a copy of "Safety in Welding & Cutting - ANSI Standard Z49.1" from the American Welding Society, P.O. Box 351040, Miami, Florida 33135 or CSA Standard W117.2. A Free copy of "Arc Welding Safety" booklet E205 is available from the Lincoln Electric Company, 22801 St. Clair Avenue, Cleveland, Ohio 44117-1199.

BE SURE THAT ALL INSTALLATION, OPERATION, MAINTENANCE AND REPAIR PROCEDURES ARE PERFORMED ONLY BY QUALIFIED INDIVIDUALS.

FOR ENGINE POWERED EQUIPMENT.

1.a. Turn the engine off before troubleshooting and maintenance work unless the maintenance work requires it to be running.

1.b. Operate engines in open, well-ventilated areas or vent the engine exhaust fumes outdoors.

1.c. Do not add the fuel near an open flame welding arc or when the engine is running. Stop the engine and allow it to cool before refueling to prevent spilled fuel from vaporizing on contact with hot engine parts and igniting. Do not spill fuel when filling tank. If fuel is spilled, wipe it up and do not start engine until fumes have been eliminated.

1.d. Keep all equipment safety guards, covers and devices in position and in good repair. Keep hands, hair, clothing and tools away from V-belts, gears, fans and all other moving parts when starting, operating or repairing equipment.

1.e. In some cases it may be necessary to remove safety guards to perform required maintenance. Remove guards only when necessary and replace them when the maintenance requiring their removal is complete. Always use the greatest care when working near moving parts.

1.f. Do not put your hands near the engine fan. Do not attempt to override the governor or idler by pushing on the throttle control rods while the engine is running.

1.g. To prevent accidentally starting gasoline engines while turning the engine or welding generator during maintenance work, disconnect the spark plug wires, distributor cap or magneto wire as appropriate.

1.h. To avoid scalding, do not remove the radiator pressure cap when the engine is hot.

1.i. Using a generator indoors CAN KILL YOU IN MINUTES.

1.j. Generator exhaust contains carbon monoxide. This is a poison you cannot see or smell.

1.k. NEVER use inside a home or garage, EVEN IF doors and windows are open.

1.l. Only use OUTSIDE and far away from windows, doors and vents.

1.m. Avoid other generator hazards. READ MANUAL BEFORE USE.

ELECTRIC AND MAGNETIC FIELDS MAY BE DANGEROUS

2.a. Electric current flowing through any conductor causes localized Electric and Magnetic Fields (EMF). Welding current creates EMF fields around welding cables and welding machines

2.b. EMF fields may interfere with some pacemakers, and welders having a pacemaker should consult their physician before welding.

2.c. Exposure to EMF fields in welding may have other health effects which are now not known.

2.d. All welders should use the following procedures in order to minimize exposure to EMF fields from the welding circuit:

2.d.1. Route the electrode and work cables together - Secure them with tape when possible.

2.d.2. Never coil the electrode lead around your body.

2.d.3. Do not place your body between the electrode and work cables. If the electrode cable is on your right side, the work cable should also be on your right side.

2.d.4. Connect the work cable to the workpiece as close as possible to the area being welded.

2.d.5. Do not work next to welding power source.

ELECTRIC SHOCK CAN KILL.

3.a. The electrode and work (or ground) circuits are electrically "hot" when the welder is on. Do not touch these "hot" parts with your bare skin or wet clothing. Wear dry, hole-free gloves to insulate hands.

3.b. Insulate yourself from work and ground using dry insulation. Make certain the insulation is large enough to cover your full area of physical contact with work and ground.

In addition to the normal safety precautions, if welding must be performed under electrically hazardous conditions (in damp locations or while wearing wet clothing; on metal structures such as floors, gratings or scaffolds; when in cramped positions such as sitting, kneeling or lying, if there is a high risk of unavoidable or accidental contact with the workpiece or ground) use the following equipment:

- Semiautomatic DC Constant Voltage (Wire) Welder.
- DC Manual (Stick) Welder.
- AC Welder with Reduced Voltage Control.

3.c. In semiautomatic or automatic wire welding, the electrode, electrode reel, welding head, nozzle or semiautomatic welding gun are also electrically "hot".

3.d. Always be sure the work cable makes a good electrical connection with the metal being welded. The connection should be as close as possible to the area being welded.

3.e. Ground the work or metal to be welded to a good electrical (earth) ground.

3.f. Maintain the electrode holder, work clamp, welding cable and welding machine in good, safe operating condition. Replace damaged insulation.

3.g. Never dip the electrode in water for cooling.

3.h. Never simultaneously touch electrically "hot" parts of electrode holders connected to two welders because voltage between the two can be the total of the open circuit voltage of both welders.

3.i. When working above floor level, use a safety belt to protect yourself from a fall should you get a shock.

3.j. Also see Items 6.c. and 8.

ARC RAYS CAN BURN.

4.a. Use a shield with the proper filter and cover plates to protect your eyes from sparks and the rays of the arc when welding or observing open arc welding. Headshield and filter lens should conform to ANSI Z87. I standards.

4.b. Use suitable clothing made from durable flame-resistant material to protect your skin and that of your helpers from the arc rays.

4.c. Protect other nearby personnel with suitable, non-flammable screening and/or warn them not to watch the arc nor expose themselves to the arc rays or to hot spatter or metal.

FUMES AND GASES CAN BE DANGEROUS.

5.a. Welding may produce fumes and gases hazardous to health. Avoid breathing these fumes and gases. When welding, keep your head out of the fume. Use enough ventilation and/or exhaust at the arc to keep fumes and gases away from the breathing zone. **When welding hardfacing (see instructions on container or SDS) or on lead or cadmium plated steel and other metals or coatings which produce highly toxic fumes, keep exposure as low as possible and within applicable OSHA PEL and ACGIH TLV limits using local exhaust or mechanical ventilation unless exposure assessments indicate otherwise. In confined spaces or in some circumstances, outdoors, a respirator may also be required. Additional precautions are also required when welding on galvanized steel.**

5. b. The operation of welding fume control equipment is affected by various factors including proper use and positioning of the equipment, maintenance of the equipment and the specific welding procedure and application involved. Worker exposure level should be checked upon installation and periodically thereafter to be certain it is within applicable OSHA PEL and ACGIH TLV limits.

5.c. Do not weld in locations near chlorinated hydrocarbon vapors coming from degreasing, cleaning or spraying operations. The heat and rays of the arc can react with solvent vapors to form phosgene, a highly toxic gas, and other irritating products.

5.d. Shielding gases used for arc welding can displace air and cause injury or death. Always use enough ventilation, especially in confined areas, to insure breathing air is safe.

5.e. Read and understand the manufacturer's instructions for this equipment and the consumables to be used, including the Safety Data Sheet (SDS) and follow your employer's safety practices. SDS forms are available from your welding distributor or from the manufacturer.

5.f. Also see item 1.b.

WELDING AND CUTTING SPARKS CAN CAUSE FIRE OR EXPLOSION.

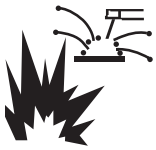

6.a. Remove fire hazards from the welding area. If this is not possible, cover them to prevent the welding sparks from starting a fire. Remember that welding sparks and hot materials from welding can easily go through small cracks and openings to adjacent areas. Avoid welding near hydraulic lines. Have a fire extinguisher readily available.

6.b. Where compressed gases are to be used at the job site, special precautions should be used to prevent hazardous situations. Refer to “Safety in Welding and Cutting” (ANSI Standard Z49.1) and the operating information for the equipment being used.

6.c. When not welding, make certain no part of the electrode circuit is touching the work or ground. Accidental contact can cause overheating and create a fire hazard.

6.d. Do not heat, cut or weld tanks, drums or containers until the proper steps have been taken to insure that such procedures will not cause flammable or toxic vapors from substances inside. They can cause an explosion even though they have been “cleaned”. For information, purchase “Recommended Safe Practices for the Preparation for Welding and Cutting of Containers and Piping That Have Held Hazardous Substances”, AWS F4.1 from the American Welding Society (see address above).

6.e. Vent hollow castings or containers before heating, cutting or welding. They may explode.

6.f. Sparks and spatter are thrown from the welding arc. Wear oil free protective garments such as leather gloves, heavy shirt, cuffless trousers, high shoes and a cap over your hair. Wear ear plugs when welding out of position or in confined places. Always wear safety glasses with side shields when in a welding area.

6.g. Connect the work cable to the work as close to the welding area as practical. Work cables connected to the building framework or other locations away from the welding area increase the possibility of the welding current passing through lifting chains, crane cables or other alternate circuits. This can create fire hazards or overheat lifting chains or cables until they fail.

6.h. Also see item 1.c.

6.I. Read and follow NFPA 51B “Standard for Fire Prevention During Welding, Cutting and Other Hot Work”, available from NFPA, 1 Batterymarch Park, PO box 9101, Quincy, MA 022690-9101.

6.j. Do not use a welding power source for pipe thawing.

CYLINDER MAY EXPLODE IF DAMAGED.

7.a. Use only compressed gas cylinders containing the correct shielding gas for the process used and properly operating regulators designed for the gas and pressure used. All hoses, fittings, etc. should be suitable for the application and maintained in good condition.

7.b. Always keep cylinders in an upright position securely chained to an undercarriage or fixed support.

7.c. Cylinders should be located:

- Away from areas where they may be struck or subjected to physical damage.
- A safe distance from arc welding or cutting operations and any other source of heat, sparks, or flame.

7.d. Never allow the electrode, electrode holder or any other electrically “hot” parts to touch a cylinder.

7.e. Keep your head and face away from the cylinder valve outlet when opening the cylinder valve.

7.f. Valve protection caps should always be in place and hand tight except when the cylinder is in use or connected for use.

7.g. Read and follow the instructions on compressed gas cylinders, associated equipment, and CGA publication P-I, “Precautions for Safe Handling of Compressed Gases in Cylinders,” available from the Compressed Gas Association, 14501 George Carter Way Chantilly, VA 20151.

FOR ELECTRICALLY POWERED EQUIPMENT.

8.a. Turn off input power using the disconnect switch at the fuse box before working on the equipment.

8.b. Install equipment in accordance with the U.S. National Electrical Code, all local codes and the manufacturer’s recommendations.

8.c. Ground the equipment in accordance with the U.S. National Electrical Code and the manufacturer’s recommendations.

Refer to http://www.lincolnelectric.com/safety for additional safety information.

ECO design information

The equipment has been designed in order to be compliant with the Directive 2009/125/EC and the Regulation 2019/1784/EU.

Efficiency and idle power consumption:

Name	Efficiency when max power consumption / Idle power consumption	Equivalent model
Power Wave 300C CE with Advance Module	85.33% / 45W	No equivalent model

Idle state; machine powered on and hibernation selected in power wave manager

Efficiency;

The Efficiency procedure itself requires the use of a grid. Power Wave Manager can be downloaded from powerwavesoftware.com along with the Power Wave Manager instruction. The Power Wave Manager instructions explain how to test a machine using a resistive load. This is described in section 6 under calibration.

The value of efficiency and consumption in idle state have been measured by method and conditions defined in the product standard EN 60974-1

Manufacturer's name, product name, code number, product number, serial number and date of production can be read from rating plate and serial number label.

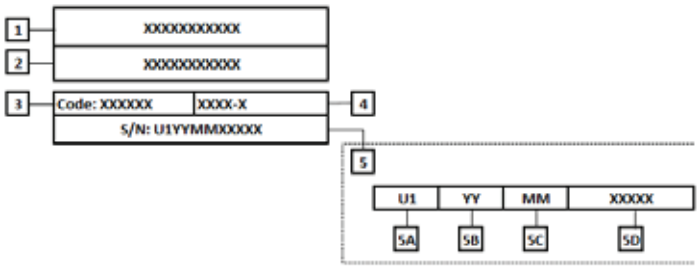

Where:

1- Manufacturer name and adress
2- Product name
3- Code number
4- Product number
5- Serial number
5A- country of production
5B- year of production
5C- month of production
5D- progressive number different for each machine

Typical gas usage for **MIG/MAG** equipment:

Material type	Wire diameter [mm]	DC electrode positive		Wire Feeding [m/min]	Shielding Gas	Gas flow [l/min]
		Current [A]	Voltage [V]			
Carbon, low alloy steel	0,9 - 1,1	95 - 200	18 - 22	3,5 – 6,5	Ar 75%, CO_2 25%	12
Aluminum	0,8 - 1,6	90 - 240	18 - 26	5,5 – 9,5	Argon	14 - 19
Austenitic stainless steel	0,8 - 1,6	85 - 300	21 - 28	3 - 7	Ar 98%, O_2 2% / He 90%, Ar 7,5% CO_2 2,5%	14 - 16
Copper alloy	0,9 - 1,6	175 - 385	23 - 26	6 - 11	Argon	12 - 16
Magnesium	1,6 - 2,4	70 - 335	16 - 26	4 - 15	Argon	24 - 28

Tig Process:

In TIG welding process, gas usage depends on cross-sectional area of the nozzle. For comonly used torches:
Helium: 14-24 l/min
Argon: 7-16 l/min
Notice: Excessive flow rates causes turbulence in the gas stream which may aspirate atmospheric contaminantion into the welding pool.

Notice: A cross wind or draft moving can disrupt the shielding gas coverage, in the interest of saving of protective gas use screen to block air flow.

End of life

At end of life of product, it has to be disposal for recycling in accordance with Directive 2012/19/EU (WEEE), information about the dismantling of product and Critical Raw Material (CRM) present in the product, can be found at: www.lincolnelectriceurope.com

PW 300C ADV CE

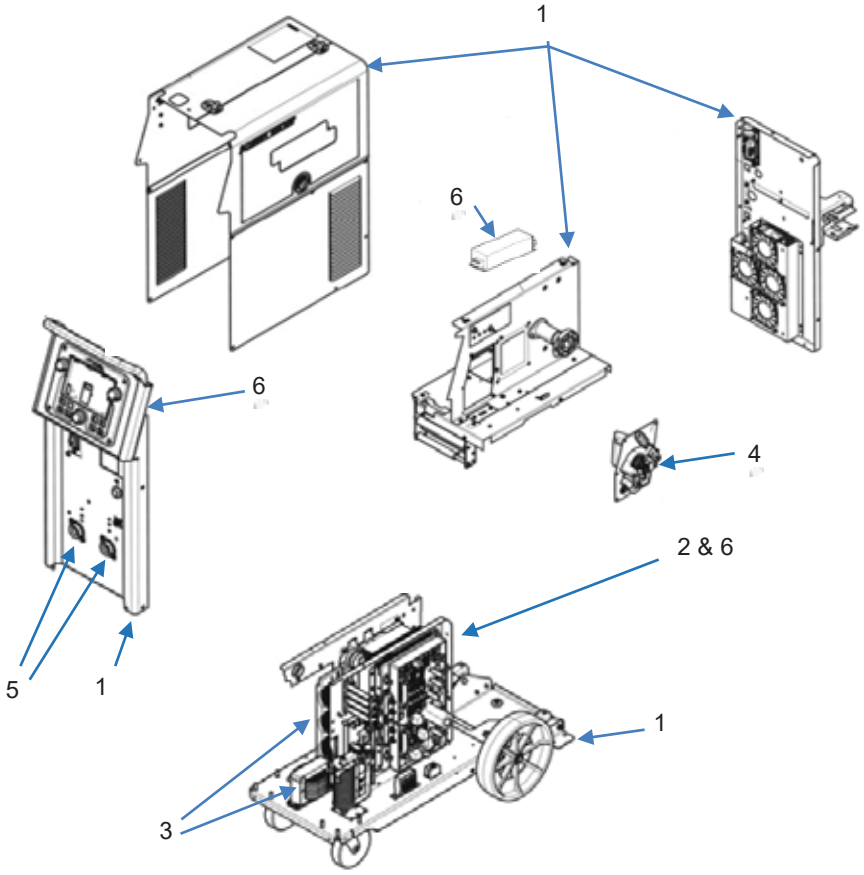

Item	Component	Material for recovery	CRM	Selective treatment
1	Enclosure	Steel	-	-
2	Heat sink, 4 total	Aluminum	Si, 37 g Mg, 62 g	-
3	Choke Internal cables	Copper	-	
4	Feed plate casting	Aluminum	Si, 39 g Mg, 0.2 g	
5	Output terminal	Brass	-	-
6	PC board & CE filter, 10 total	-	-	Required
7	External cables – not shown	Copper	-	Required

Reference: P-1568-A, code 12945

PRÉCAUTIONS DE SÛRETÉ

Pour votre propre protection lire et observer toutes les instructions et les précautions de sûreté specifiques qui parraissent dans ce manuel aussi bien que les précautions de sûreté générales suivantes:

Sûreté Pour Soudage A L'Arc

1. Protegez-vous contre la secousse électrique:

   a. Les circuits à l'électrode et à la piéce sont sous tension quand la machine à souder est en marche. Eviter toujours tout contact entre les parties sous tension et la peau nue ou les vétements mouillés. Porter des gants secs et sans trous pour isoler les mains.
   b. Faire trés attention de bien s'isoler de la masse quand on soude dans des endroits humides, ou sur un plancher metallique ou des grilles metalliques, principalement dans les positions assis ou couché pour lesquelles une grande partie du corps peut être en contact avec la masse.
   c. Maintenir le porte-électrode, la pince de masse, le câble de soudage et la machine à souder en bon et sûr état defonctionnement.
   d.Ne jamais plonger le porte-électrode dans l'eau pour le refroidir.
   e. Ne jamais toucher simultanément les parties sous tension des porte-électrodes connectés à deux machines à souder parce que la tension entre les deux pinces peut être le total de la tension à vide des deux machines.
   f. Si on utilise la machine à souder comme une source de courant pour soudage semi-automatique, ces precautions pour le porte-électrode s'applicuent aussi au pistolet de soudage.

2. Dans le cas de travail au dessus du niveau du sol, se protéger contre les chutes dans le cas ou on recoit un choc. Ne jamais enrouler le câble-électrode autour de n'importe quelle partie du corps.

3. Un coup d'arc peut être plus sévère qu'un coup de soliel, donc:

   a. Utiliser un bon masque avec un verre filtrant approprié ainsi qu'un verre blanc afin de se protéger les yeux du rayonnement de l'arc et des projections quand on soude ou quand on regarde l'arc.
   b. Porter des vêtements convenables afin de protéger la peau de soudeur et des aides contre le rayonnement de l'arc.
   c. Protéger l'autre personnel travaillant à proximité au soudage à l'aide d'écrans appropriés et non-inflammables.

4. Des gouttes de laitier en fusion sont émises de l'arc de soudage. Se protéger avec des vêtements de protection libres de l'huile, tels que les gants en cuir, chemise épaisse, pantalons sans revers, et chaussures montantes.

5. Toujours porter des lunettes de sécurité dans la zone de soudage. Utiliser des lunettes avec écrans lateraux dans les zones où l'on pique le laitier.

6. Eloigner les matériaux inflammables ou les recouvrir afin de prévenir tout risque d'incendie dû aux étincelles.

7. Quand on ne soude pas, poser la pince à une endroit isolé de la masse. Un court-circuit accidental peut provoquer un échauffement et un risque d'incendie.

8. S'assurer que la masse est connectée le plus prés possible de la zone de travail qu'il est pratique de le faire. Si on place la masse sur la charpente de la construction ou d'autres endroits éloignés de la zone de travail, on augmente le risque de voir passer le courant de soudage par les chaines de levage, câbles de grue, ou autres circuits. Cela peut provoquer des risques d'incendie ou d'echauffement des chaines et des câbles jusqu'à ce qu'ils se rompent.

9. Assurer une ventilation suffisante dans la zone de soudage. Ceci est particuliérement important pour le soudage de tôles galvanisées plombées, ou cadmiées ou tout autre métal qui produit des fumeés toxiques.

10. Ne pas souder en présence de vapeurs de chlore provenant d'opérations de dégraissage, nettoyage ou pistolage. La chaleur ou les rayons de l'arc peuvent réagir avec les vapeurs du solvant pour produire du phosgéne (gas fortement toxique) ou autres produits irritants.

11. Pour obtenir de plus amples renseignements sur la sûreté, voir le code "Code for safety in welding and cutting" CSA Standard W 117.2-1974.

PRÉCAUTIONS DE SÛRETÉ POUR LES MACHINES À SOUDER À TRANSFORMATEUR ET À REDRESSEUR

1. Relier à la terre le chassis du poste conformement au code de l'électricité et aux recommendations du fabricant. Le dispositif de montage ou la piece à souder doit être branché à une bonne mise à la terre.

2. Autant que possible, l'installation et l'entretien du poste seront effectués par un électricien qualifié.

3. Avant de faires des travaux à l'interieur de poste, la debrancher à l'interrupteur à la boite de fusibles.

4. Garder tous les couvercles et dispositifs de sûreté à leur

ELECTROMAGNETIC COMPATIBILITY (EMC)

CONFORMANCE

Products displaying the CE mark are in conformity with European Community Council Directive of 15 Dec 2004 on the approximation of the laws of the Member States relating to electromagnetic compatibility, 2004/108/EC. It was manufactured in conformity with a national standard that implements a harmonized standard: EN 60974-10 Electromagnetic Compatibility (EMC) Product Standard for Arc Welding Equipment. It is for use with other Lincoln Electric equipment. It is designed for industrial and professional use.

INTRODUCTION

All electrical equipment generates small amounts of electromagnetic emission. Electrical emission may be transmitted through power lines or radiated through space, similar to a radio transmitter. When emissions are received by other equipment, electrical interference may result. Electrical emissions may affect many kinds of electrical equipment; other nearby welding equipment, radio and TV reception, numerical controlled machines, telephone systems, computers, etc.

Warning: This Class A equipment is not intended for use in residential locations where the electrical power is provided by the public low-voltage supply system. There may be potential difficulties in ensuring electro-magnetic compatibility in those locations, due to conducted as well as radiated disturbances.

INSTALLATION AND USE

The user is responsible for installing and using the welding equipment according to the manufacturer's instructions.

If electromagnetic disturbances are detected then it shall be the responsibility of the user of the welding equipment to resolve the situation with the technical assistance of the manufacturer. In some cases this remedial action may be as simple as earthing (grounding) the welding circuit, see Note. In other cases it could involve constructing an electromagnetic screen enclosing the power source and the work complete with associated input filters. In all cases electromagnetic disturbances must be reduced to the point where they are no longer troublesome.

Note: The welding circuit may or may not be earthed for safety reasons. Follow your local and national standards for installation and use. Changing the earthing arrangements should only be authorized by a person who is competent to assess whether the changes will increase the risk of injury, e.g., by allowing parallel welding current return paths which may damage the earth circuits of other equipment.

ASSESSMENT OF AREA

Before installing welding equipment the user shall make an assessment of potential electromagnetic problems in the surrounding area. The following shall be taken into account:

a) other supply cables, control cables, signaling and telephone cables; above, below and adjacent to the welding equipment;

b) radio and television transmitters and receivers;

c) computer and other control equipment;

d) safety critical equipment, e.g., guarding of industrial equipment;

e) the health of the people around, e.g., the use of pacemakers and hearing aids;

f) equipment used for calibration or measurement;

g) the immunity of other equipment in the environment. The user shall ensure that other equipment being used in the environment is compatible. This may require additional protection measures;

h) the time of day that welding or other activities are to be carried out.

The size of the surrounding area to be considered will depend on the structure of the building and other activities that are taking place. The surrounding area may extend beyond the boundaries of the premises.

METHODS OF REDUCING EMISSIONS

Public Supply System

Welding equipment should be connected to the public supply system according to the manufacturer's recommendations. If interference occurs, it may be necessary to take additional precautions such as filtering of the system. Consideration should be given to shielding the supply cable of permanently installed welding equipment, in metallic conduit or equivalent. Shielding should be electrically continuous throughout its length. The shielding should be connected to the welding power source so that good electrical contact is maintained between the conduit and the welding power source enclosure.

Maintenance of the Welding Equipment

The welding equipment should be routinely maintained according to the manufacturer's recommendations. All access and service doors and covers should be closed and properly fastened when the welding equipment is in operation. The welding equipment should not be modified in any way except for those changes and adjustments covered in the manufacturer's instructions. In particular, the spark gaps of arc striking and stabilizing devices should be adjusted and maintained according to the manufacturer's recommendations.

Welding Cables

The welding cables should be kept as short as possible and should be positioned close together, running at or close to the floor level.

Equipotential Bonding

Bonding of all metallic components in the welding installation and adjacent to it should be considered. However, metallic components bonded to the work piece will increase the risk that the operator could receive a shock by touching these metallic components and the electrode at the same time. The operator should be insulated from all such bonded metallic components.

Earthing of the Workpiece

Where the workpiece is not bonded to earth for electrical safety, nor connected to earth because of its size and position, e.g., ship's hull or building steelwork, a connection bonding the workpiece to earth may reduce emissions in some, but not all instances. Care should be taken to prevent the earthing of the workpiece increasing the risk of injury to users, or damage to other electrical equipment. Where necessary, the connection of the workpiece to earth should be made by a direct connection to the workpiece, but in some countries where direct connection is not permitted, the bonding should be achieved by suitable capacitance, selected according to national regulations.

Screening and Shielding

Selective screening and shielding of other cables and equipment in the surrounding area may alleviate problems of interference. Screening of the entire welding installation may be considered for special applications.

Page

Installation ..... **Section A**
Technical Specifications A-1, A-2, A-3
Safety Precautions A-4
Location, Lifting A-4
Stacking A-4
Tilting A-4
Input and Ground Connections A-4
Machine Grounding A-4
High Frequency Protection A-4
Input Connection A-5
Input Fuse and Supply Wire A-5
Input Voltage Selection A-5
Power Cord Replacement A-6
Connection Diagram A-6
Recommended Work Cable Sizes A-6
Voltage Sensing Overview A-6
Polarity A-6
Cable Connections A-7
Cable Inductance and its Effects on Welding A-7
Shielding Gas Connections A-8
Loading Spool Wire A-9
Wire Drive Configuration A-10
Procedure to Install Drive Rolls and Wire Guides A-10
Gun Used A-11
Feeding Electrode and Brake Adjustment A-11
Drive Roll Pressure Setting A-11
Pressure Arm Adjustment A-11
GTAW Welding A-12
SMAW Welding A-12

Operation ..... **Section B**
Safety Precautions B-1
Graphic Symbols B-1
Power-Up Sequence B-1
Duty Cycle B-1
Product Description B-2
Recommended Processes and Equipment B-2
Equipment Limitations B-3
Design Features B-3
Case Front Controls Standard Models B-4
Case Front Controls Advanced Models B-5
Case Back Controls B-6
Internal Controls B-7
Making a Weld with Waveform Technology Power Sources ..... B-8 thru B-25
Gun Selection B-26
Gun Knob Behavior B-26
Gun Calibration B-26
User Interface Programming B-27
Wave Control B-28
2-Step / 4-Step Trigger Operation ..... B-29 thru B-33
Cold Feed/Gas Purge Switch B-34

Accessories ..... **Section C**
General Options / Accessories C-1

Page

Maintenance .....Section D
Safety Precautions D-1
Routine Maintenance D-1
Periodic Maintenance.....D-1
Calibration Specification.....D-1
System Snapshot.....D-2

Troubleshooting .....Section E
Safety Precautions E-1
How to Use Troubleshooting Guide.....E-1
Using Status LED and Error Fault Codes E-2, E-4
Troubleshooting Guide.....E-5 thru E-9

Wiring Diagram and Dimension Print .....Section F

Parts Pages .....P-648 Series

TECHNICAL SPECIFICATIONS - POWER WAVE® 300C STANDARD

POWER SOURCE-INPUT VOLTAGE AND CURRENT

Model	Input Voltage ±10% (* includes 380V to 415V)	Maximum Input Amperes (1 Phase in parenthesis)	Idle Power	Power Factor at Rated Output
K4487-1	208/230/**400***/460/575 1/3 phase 50/60 Hz	39/35/22/18/14.5 (57/52/NA/32/NA)	N/A	N/A

RATED OUTPUT

Process	Duty Cycle	Volts (RMS) at Rated Amperes		Amperes (RMS)	
		1 Phase	3 Phase	1 Phase	3 Phase
GMAW GMAW-Pulse FCAW	40%	28	31.5	280	350
	60%	28	29	280	300
	100%	28	29	280	300
SMAW	40%	30.8	33	270	325
	60%	30	31.2	250	280
	100%	30	31.2	250	280
GTAW-DC	40%	23	24	325	350
	60%	21.2	22	280	300
	100%	21.2	22	280	300

RECOMMENDED INPUT WIRE AND FUSE SIZES[1]

INPUT VOLTAGE / PHASE / FREQUENCY	EFFFECTIVE INPUT AMPERES RATING	CORD SIZES[3] AWG SIZES (mm^2)	TIME DELAY FUSE OR BREAKER SIZE[2] (AMPS)
208/1/50/60	53	6 (16)	70
208/3/50/60	31	8 (10)	45
230/1/50/60	49	6 (16)	70
230/3/50/60	28	8 (10)	45
400/3/50/60	17.5	12 (4)	30
460/1/50/60	31	8 (10)	45
460/3/50/60	14.5	14 (2.5)	25
575/3/50/60	11.5	14 (2.5)	20

1 Wire and Fuse Sizes based upon the U.S. National Electric Code and maximum output for 40°C (104°F) ambient.
2 Also called “inverse time” or “thermal/magnetic” circuit breakers; circuit breakers that have a delay in tripping action that decreases as the magnitude of current increases.
3 Type SO cord or similar in 30°C ambient.

TECHNICAL SPECIFICATIONS - POWER WAVE® 300C ADVANCED

POWER SOURCE-INPUT VOLTAGE AND CURRENT

Model	Input Voltage ±10% (* includes 380V to 415V)	Maximum Input Amperes (1 Phase in parenthesis)	Idle Power	Power Factor at Rated Output
K4488-[ ]	208/230/400*/460/575 1/3 phase 50/60 Hz	44/40/25/20/16.5 (61/58/NA/34/NA)	N/A	N/A
K4490-[ ]	208/230/400*/460/575 3 phase 50/60 Hz	44/40/25/20/16.5		

RATED OUTPUT

Process	Duty Cycle	Volts (RMS) at Rated Amperes		Amperes (RMS)	
		1 Phase	3 Phase	1 Phase	3 Phase
GMAW GMAW-Pulse FCAW	40%	28	31.5	280	350
	60%	28	29	280	300
	100%	28	29	280	300
SMAW	40%	30.8	33	270	325
	60%	30	31.2	250	280
	100%	30	31.2	250	280
GTAW-DC	40%	23	24	325	350
	60%	21.2	22	280	300
	100%	21.2	22	280	300

RECOMMENDED INPUT WIRE AND FUSE SIZES[1]

INPUT VOLTAGE / PHASE / FREQUENCY	EFFFECTIVE INPUT AMPERES RATING	CORD SIZES[3] AWG SIZES (mm^2)	TIME DELAY FUSE OR BREAKER SIZE[2] (AMPS)
208/1/50/60	59	6 (16)	70
208/3/50/60	35	8 (10)	50
230/1/50/60	55	6 (16)	70
230/3/50/60	32	8 (10)	50
400/3/50/60	19.5	12 (4)	30
460/1/50/60	34	8 (10)	50
460/3/50/60	16	14 (2.5)	25
575/3/50/60	14	14 (2.5)	20

1 Wire and Fuse Sizes based upon the U.S. National Electric Code and maximum output for 40°C (104°F) ambient.
2 Also called “inverse time” or “thermal/magnetic” circuit breakers; circuit breakers that have a delay in tripping action that decreases as the magnitude of current increases.
3 Type SO cord or similar in 30°C ambient.

TECHNICAL SPECIFICATIONS - POWER WAVE® 300C CE ADVANCED

POWER SOURCE-INPUT VOLTAGE AND CURRENT

Model	Input Voltage ±10% (* includes 380V to 415V)	Maximum Input Amperes (1 Phase in parenthesis)	Idle Power	Power Factor at Rated Output
K4490-5, -6	208/230/400* 3 phase 50/60 Hz	44/40/25	N/A	95%

RATED OUTPUT

Process	Duty Cycle	Volts (RMS) at Rated Amperes	Amperes (RMS)
		3 Phase	3 Phase
GMAW GMAW-Pulse FCAW	40%	30.3	325
	60%	29	300
	100%	29	300
SMAW-DC	40%	33	325
	60%	31.2	280
	100%	31.2	280
SMAW-AC	40%	32	300
	60%	31.2	280
	100%	31.2	280
GTAW-DC	40%	24	350
	60%	22	300
	100%	22	300

RECOMMENDED INPUT WIRE AND FUSE SIZES[1]

INPUT VOLTAGE / PHASE / FREQUENCY	EFFFECTIVE INPUT AMPERES RATING	CORD SIZES[3] AWG SIZES (mm^2)	TIME DELAY FUSE OR BREAKER SIZE[2] (AMPS)
208/3/50/60	34	8 (10)	45
230/3/50/60	30	8 (10)	45
400/3/50/60	18.5	12 (4)	30

1 Wire and Fuse Sizes based upon the U.S. National Electric Code and maximum output for 40°C (104°F) ambient.
2 Also called “inverse time” or “thermal/magnetic” circuit breakers; circuit breakers that have a delay in tripping action that decreases as the magnitude of current increases.
3 Type SO cord or similar in 30°C ambient.

TECHNICAL SPECIFICATIONS - POWER WAVE® 300C CE

POWER SOURCE-INPUT VOLTAGE AND CURRENT				
Model	**Input Voltage ±10% (* includes 380V to 415V)**	**Maximum Input Amperes (1 Phase in parenthesis)**	**Idle Power**	**Power Factor at Rated Output**
K4489-1	208/230/400* 3 phase 50/60 Hz	43/39/23.5	N/A	95%

RATED OUTPUT			
Process	**Duty Cycle**	**Volts (RMS) at Rated Amperes**	**Amperes (RMS)**
		3 Phase	**3 Phase**
GMAW GMAW-Pulse FCAW	40%	30.3	325
	60%	29	300
	100%	29	300
SMAW-DC	40%	33	325
	60%	31.2	280
	100%	31.2	280
GTAW-DC	40%	24	350
	60%	22	300
	100%	22	300

RECOMMENDED INPUT WIRE AND FUSE SIZES[1]			
INPUT VOLTAGE / PHASE / FREQUENCY	**EFFFECTIVE INPUT AMPERES RATING**	**CORD SIZES[3] AWG SIZES (mm^2)**	**TIME DELAY FUSE OR BREAKER SIZE[2] (AMPS)**
208/3/50/60	35	8 (10)	45
230/3/50/60	32	8 (10)	45
400/3/50/60	19	12 (4)	30

1 Wire and Fuse Sizes based upon the U.S. National Electric Code and maximum output for 40°C (104°F) ambient.
2 Also called “inverse time” or “thermal/magnetic” circuit breakers; circuit breakers that have a delay in tripping action that decreases as the magnitude of current increases.
3 Type SO cord or similar in 30°C ambient.

POWER WAVE 300C STANDARD AND ADVANCED

WIRE FEED SPEED (WFS) RANGE-WIRE SIZE

WFS RANGE	GMAW MILD STEEL	GMAW ALUMINUM	GMAW STAINLESS	FCAW
	WIRE SIZES	WIRE SIZES	WIRE SIZES	WIRE SIZES
50 – 800 in/min (1.3 – 20.32 m/min)	.025 – .045" (0.6 – 1.1mm)	.030 – 3/64" (0.8 – 1.2mm)	.035 – .045" (0.9 – 1.1mm)	.035 – .052" (0.9 – 1.4mm)

WELDING PROCESS

PROCESS	OUTPUT RANGE (AMPERES)	OCV (U_o)
GMAW GMAW-Pulse FCAW	40 - 350	70 VDC average, 74V peak
GTAW-DC	5 – 350	24 VDC average, 45V peak
SMAW	5 – 350	60 VDC average, 65V peak

WIRE SPEED RANGE

Wire Speed	50 – 800 in/min (1.3 – 20.32 m/min)

PHYSICAL DIMENSIONS

MODEL	HEIGHT	WIDTH	DEPTH	WEIGHT
K4487-1 K4488-1 K4488-2, -3	39.7in (1008mm)	39.4in (1001mm) 39.4in (1001mm) 43.3in (1100mm)	20.5in (521mm) 20.5in (521mm) 28.4in (721mm)	194lbs (88kg)* 214lbs (97kg)* 259lbs (118kg)*

TEMPERATURE RANGES

OPERATING TEMPERATURE RANGE	STORAGE TEMPERATURE RANGE
Environmentally Hardened: -4°F to 104°F (-20°C to 40°C)	Environmentally Hardened: -40°F to 185°F (-40°C to 85°C)

IP21S 155ºF Insulation Class

* Weight does not include input cord.

Thermal tests have been performed at ambient temperature. The duty cycle (duty factor) at 40°C has been determined by simulation.

POWER WAVE 300C CE / CE ADVANCED MODELS

WIRE FEED SPEED (WFS) RANGE-WIRE SIZE

WFS RANGE	GMAW MILD STEEL	GMAW ALUMINUM	GMAW STAINLESS	FCAW
	WIRE SIZES	WIRE SIZES	WIRE SIZES	WIRE SIZES
50 – 800 in/min (1.3 – 20.32 m/min)	.025 – .045" (0.6 – 1.1mm)	.030 – 3/64" (0.8 – 1.2mm)	.035 – .045" (0.9 – 1.1mm)	.035 – .052" (0.9 – 1.4mm)

WELDING PROCESS

PROCESS	OUTPUT RANGE (AMPERES)	OCV (U_o)
GMAW GMAW-Pulse FCAW	40 - 350	70 VDC average, 76V peak
GTAW-DC	5 – 350	24 VDC average, 43V peak
SMAW-DC	5 – 350	60 VDC average, 65V peak
SMAW-AC	5 – 350	60 VDC average, 69V peak

WIRE SPEED RANGE

Wire Speed	50 – 800 in/min (1.3 – 20.32 m/min)

PHYSICAL DIMENSIONS

MODEL	HEIGHT	WIDTH	DEPTH	WEIGHT
K4489-1 K4490-3 K4490-5 K4490-6	39.7in (1008mm)	39.4in (1001mm) 43.3in (1100mm) 39.4in (1001mm) 39.4in (1001mm)	20.5in (521mm) 28.4in (721mm) 20.5in (521mm) 20.5in (521mm)	194lbs (88kg) * 259lbs (118kg)* 194lbs (88kg)* 194lbs (88kg) *

TEMPERATURE RANGES

OPERATING TEMPERATURE RANGE	STORAGE TEMPERATURE RANGE
Environmentally Hardened: -4°F to 104°F (-20°C to 40°C)	Environmentally Hardened: -40°F to 185°F (-40°C to 85°C)

IP21S 155ºF Insulation Class

* Weight does not include input cord.

Thermal tests have been performed at ambient temperature. The duty cycle (duty factor) at 40°C has been determined by simulation.

SAFETY PRECAUTIONS

Read this entire installation section before you start installation.

WARNING

ELECTRIC SHOCK can kill.

- **Only qualified personnel should perform this installation.**
- **Turn the input power OFF at the disconnect switch or fuse box before working on this equipment. Turn off the input power to any other equipment connected to the welding system at the disconnect switch or fuse box before work ing on the equipment.**
- **Do not touch electrically hot parts.**
- **Always connect the POWER WAVE® 300C grounding lug (located inside the reconnect input access door) to a proper safety (Earth) ground.**

SELECT SUITABLE LOCATION

The POWER WAVE 300C will operate in harsh environments. Even so, it is important that simple preventative measures are followed in order to assure long life and reliable operation.

- The machine must be located where there is free circulation of clean air such that air movement in the back, out the sides, and bottom will not be restricted.
- Dirt and dust that can be drawn into the machine should be kept to a minimum. The use of air filters on the air intake is not recommended because normal air flow may be restricted. Failure to observe these precautions can result in excessive operating temperatures and nuisance shutdown.
- Keep machine dry. Shelter from rain and snow. Do not place on wet ground or in puddles.
- Do not mount the POWER WAVE 300C over combustible surfaces. Where there is a combusible surface directly under stationary or fixed electrical equipment, that surface shall be covered with a steel plate at least .060 (1.6mm) thick, which shall extend not less than 5.90 (150mm) beyond the equipment on all sides.

WARNING

FALLING EQUIPMENT can cause injury.

- **Lift only with equipment of adequate lifting capacity.**
- **Be sure machine is stable when lifting.**
- **Do not operate machine while suspended when lifting.**

STACKING

The POWER WAVE 300C cannot be stacked.

TILTING

Place the machine directly on a secure, level surface or on a recommended undercarriage. The machine may topple over if this procedure is not followed.

INPUT AND GROUND CONNECTIONS

Only a qualified electrician should connect the POWER WAVE 300C. Installation should be made in accordance with the appropriate National Electrical Code, all local codes and the information in this manual.

MACHINE GROUNDING

The frame of the welder must be grounded. A ground terminal marked with a ground symbol is located next to the input power connection block.

See your local and national electrical codes for proper grounding methods.

HIGH FREQUENCY PROTECTION

The EMC classification of the POWER WAVE 300C is Industrial, Scientific, and Medical (ISM) group 2, class A. ThePOWER WAVE ® 300C is for industrial use only. (See **Electromagnetic compatibility EMC Safety** Section).

Locate the POWER WAVE 300C away from radio controlled machinery. The normal operation of the POWER WAVE 300C may adversely affect the operation of RF controlled equipment, which may result in bodily injury or damage to the equipment.

INPUT CONNECTION

⚠ WARNING

Only a qualified electrician should connect the input leads to the POWER WAVE® 300C. Connections should be made in accordance with all local and national electrical codes and the connection diagram located on the inside of the reconnect access door of the machine. Failure to do so may result in bodily injury or death.

A 10 ft. power cord is provided and wired into the machine. Follow the power cord connection instructions.

For Single Phase Input

Non-CE Models

Connect green lead to ground per National Electrical Code.

Connect black and white leads to power.

Wrap red lead with tape to provide 600V insulation.

CE Models

Not supported.

For Three Phase Input

Non-CE Models

Connect green lead to ground per National Electric Code.

Connect black, red and white leads to power.

CE Models

Connect green-yellow lead to ground per National Electric Code.

Connect grey, brown and black leads to power.

ENSURE INPUT LEADS ARE PROPERLY ROUTED THROUGH TORROIDS.

White, brown, and grey leads pass through all three torroids.

Green-yellow lead passes through two torroids.

INPUT FUSE AND SUPPLY WIRE CONSIDERATIONS

Refer to Specification Section for recommended fuse, wire sizes and type of the copper wires. Fuse the inut circuit with the recommended super lag fuse or delay type breakers (also called "inverse time" or "thermal/magnetic" circuit breakers). Choose input and grounding wire size according to local or national electrical codes. Using input wire sizes, fuses or circuit breakers smaller than recommended may result in “nuisance” shut-offs from welder inrush currents, even if the machine is not being used at high currents.

INPUT VOLTAGE SELECTION

The POWER WAVE 300C automatically adjusts to work with different input voltages. No reconnect switches settings are required.

⚠ WARNING

The POWER WAVE 300C ON/OFF switch is not intended as a service disconnect for this equipment. Only a qualified electrician should connect the input leads to the POWER WAVE 300C. Connections should be made in accordance with all local and national electrical codes and the connection diagram located on the inside of the reconnect access door of the machine. Failure to do so may result in bodily injury or death.

POWER CORD REPLACEMENT

⚠ WARNING

Only a qualified electrician should connect the input leads to the POWER WAVE® 300C. Connections should be made in accordance with all local and national electrical codes and the connection diagram located on the inside of the reconnect access door of the machine. Failure to do so may result in bodily injury or death.

If the input power cord is damaged or needs to be replaced an input power connection block is located in the access panel under the wire spool.

ALWAYS CONNECT THE POWERWAVE GROUNDING LUG (LOCATED INSIDE THE ACCESS PANEL) TO A PROPER SAFETY (EARTH) GROUND. ENSURE INPUT LEADS ARE PROPERLY ROUTED THROUGH TORRIODS ON C MODELS.

FIGURE A.1

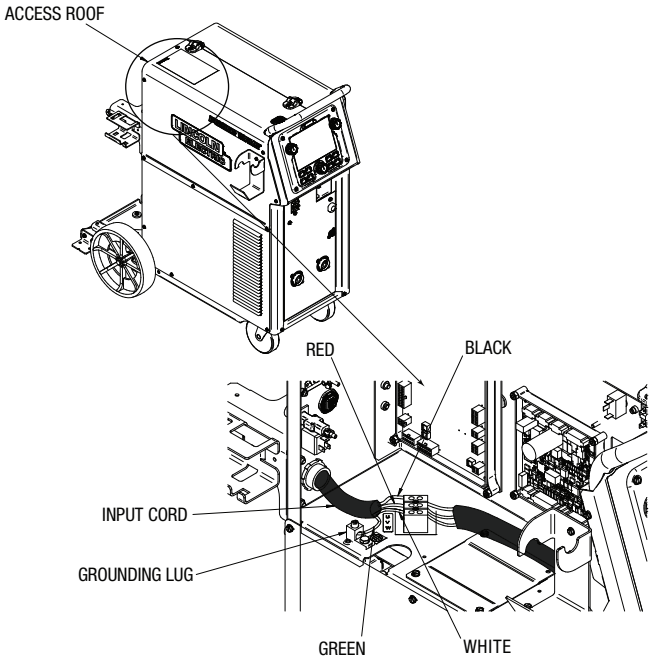

NON-CE MODELS

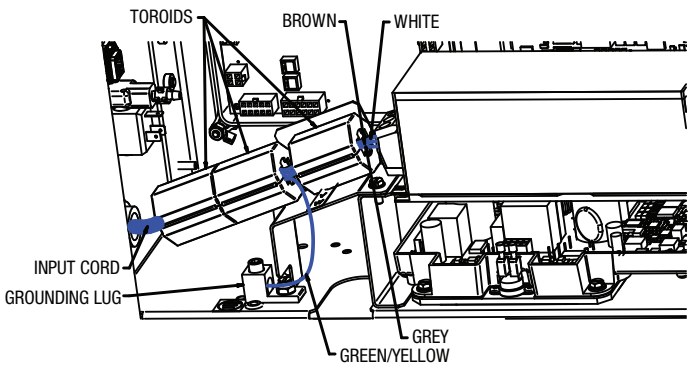

CE MODELS

RECOMMENDED WORK CABLE SIZES FOR ARC WELDING

A 15 ft. work cable is provided with the POWER WAVE 300C. This cable is appropriately sized for all of the POWER WAVE 300C's welding procedures. If the work cable needs to be replaced a similar quality of cable should be used as excessive voltage drops caused by undersized welding cables can result in unsatisfactory welding performance. Always use the largest work cables that is practical, and be sure all connections are clean and tight.

Note: Excessive heat in the weld circuit indicates undersized cables and/or bad connections.

VOLTAGE SENSING OVERVIEW

Since the POWER WAVE 300C has the ability to be in close proximity to the welding arc, the POWER WAVE 300C does not require the use of remote sense leads.

Although, depending upon the process, inductance within the electrode and work cables can influence the voltage apparent at the studs of the welder, and have a dramatic effect on performance. Remote voltage sense leads are used to improve the accuracy of the arc voltage information supplied to the control pc board. Sense Lead Kits (K940-xx) are available for this purpose.

The POWER WAVE 300C (Advanced All In One ONLY) has the ability to automatically sense when remote sense leads are connected. With this feature there are no requirements for setting-up the machine to use remote sense leads. This feature can be disabled through the Weld Manager Utility (available at www.powerwavesoftware.com) or through the set up menu on the UI screen.

SEMI-AUTOMATIC WELDING POLARITY

Most GMAW welding procedures use Electrode Positive welding. For these applications, connect the wire drive's connection block to the positive (+) output stud and connect the work lead to the negative (-) output stud.

Some FCAW-S does use Electrode Negative Polarity. For these applications, connect the wire drive's connection block to the negative (-) output stud and connect the work lead to the positive (+) output stud.

The advanced model has the ability to self configure the electrode polarity based on the UI selection.

CABLE CONNECTIONS

There are two connections under the front panel.
(See 4-pin and 12-pin---Figure A.2---Table A.1)

TABLE A.1

FIGURE A.2	Function	PIN	Wiring
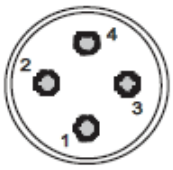	4-pin trigger connector for push-only guns.*	1 2 3 4	Supply Voltage for Dual Procedure Dual Procedure Input Trigger Input Supply Voltage for Trigger
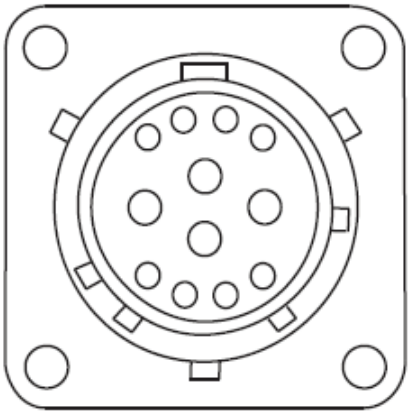	12 pin connector for Push pull guns; foot pedal; remote controls; Hand –amptrols.	A B C D E F G H J K L M	CANL CANH Remote Pot Common Remote Pot Wiper Remote Pot +10VDC ArcLink Peripheral Sense Trigger Trigger Power Common Power + Motor Negative Motor Positive

***NOTE: 4-Pin connection not present on K4489 and K4490 models**

CABLE INDUCTANCE AND ITS EFFECTS ON WELDING

Whenever possible always weld in a direction away from the work (ground) connection.

Excessive cable inductance will cause the welding performance to degrade. There are several factors that contribute to the overall inductance of the cabling system including cable size, and loop area. The loop area is defined by the separation distance between the electrode and work cables, and the overall welding loop length. The welding loop length is defined as the total of length of the electrode cable (A) + work cable (B) + work path (C) (see Figure A.3).

To minimize inductance always use the appropriate size cables, and whenever possible, run the electrode and work cables in close proximity to one another to minimize the loop area. Since the most significant factor in cable inductance is the welding loop length, avoid excessive lengths and do not coil excess cable. For long work piece lengths, a sliding ground should be considered to keep the total welding loop length as short as possible.

For additional Safety information regarding the electrode and work cable set-up, See the standard "SAFETY INFORMATION" located in the front of this Instruction Manual.

FIGURE A.3

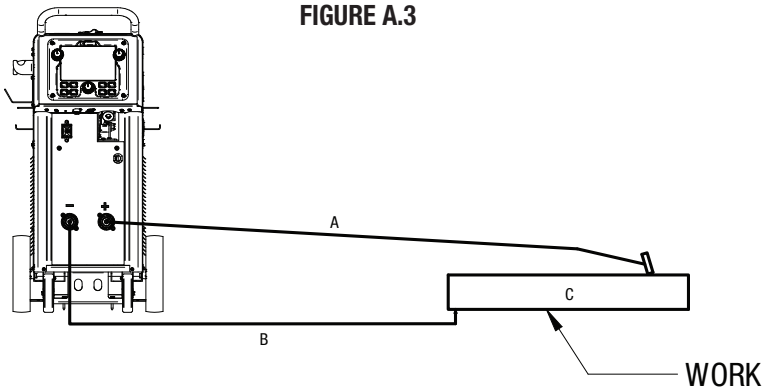

SHIELDING GAS CONNECTION

⚠ WARNING

CYLINDER may explode if damaged.

- **Keep cylinder upright and chained to support.**

- **Keep cylinder away from areas where it may be damaged.**
- **Never lift welder with cylinder attached.**
- **Never allow welding electrode to touch cylinder.**
- **Keep cylinder away from welding or other live electrical circuits.**

- **BUILD UP OF SHIELDING GAS MAY HARM HEALTH OR KILL.**
- **Shut off shielding gas supply when not in use.**
- **See American National Standard Z-49.1, "Safety in in Welding and Cutting" Published by the American Welding Society.**

Customer must provide a cylinder of shielding gas, a pressure regulator, a flow control valve, and a hose from the flow valve to the gas inlet fitting of the wire drive unit. Connect a supply hose from the gas cylinder flow valve outlet to the 5/8-18 female inert gas fitting on the back panel of the POWER WAVE 300C.

MAXIMUM INLET PRESSURE IS 100 PSI. (6.9 BAR.)

Install the shielding gas supply as follows:

1. Secure the cylinder to prevent it from falling.

2. Remove the cylinder cap. Inspect the cylinder valves and regulator for damaged threads, dirt, dust, oil or grease. Remove dust and dirt with a clean cloth. **DO NOT ATTACH THE REGULATOR IF OIL, GREASE OR DAMAGE IS PRESENT!** Inform your gas supplier of this condition. Oil or grease in the presence of high pressure oxygen is explosive.

3. Stand to one side away from the outlet and open the cylinder valve for an instant. This blows away any dust or dirt which may have accumulated in the valve outlet.

4. Attach the flow regulator to the cylinder valve and tighten the union nut(s) securely with a wrench.
   Note: If connecting to 100% CO_2 cylinder, insert regulator adapter between regulator and cylinder valve. If adapter is equipped with a plastic washer, be sure it is seated for connection to the CO_2 cylinder.

5. Attach one end of the inlet hose to the outlet fitting of the flow regulator. Attach the other end to the welding system shielding gas inlet. Tighten the union nuts with a wrench.

6. Before opening the cylinder valve, turn the regulator adjusting knob counterclockwise until the adjusting spring pressure is released.

7. Standing to one side, open the cylinder valve slowly a fraction of a turn. When the cylinder pressure gage stops moving, open the valve fully.

8. The flow regulator is adjustable. Adjust it to the flow rate recommended for the procedure and process being used before making a weld.

LOADING SPOOLS OF WIRE

⚠ WARNING

- **Keep hands, hair, clothing and tools away from rotating equipment.**
- **Do not wear gloves when threading wire or changing wire spool.**
- **Only qualified personnel should install, use or service this equipment.**

Loading 10 to 15 lb. (4.5 – 6.8kg) Spools.

A K468 spindle adapter permits 8” (203mm) O.D. spools to be mounted on 2” (51mm) O.D. spindles.

1. Squeeze the release bar on the retaining collar and remove it from the spindle.

2. Place the spindle adapter on the spindle, aligning the spindle brake pin with the hole in the adapter.

3. Place the spool on the spindle and align the adapter brake tab with one of the holes in the back side of the spool. An indicator mark on the end of the spindle shows the orientation of the brake tab. Be certain the wire feeds off of the spool in the proper direction.

4. Re-install the retaining collar. Make sure that the release bar snaps out and that the retaining collar fully engages the groove on the spindle.

Loading 16 to 44 lb. (7.3 – 20kg) Spools

1. Squeeze the release bar on the retaining collar and remove it from the spindle.

2. Place the spool on the spindle, aligning the spindle brake pin with one of the holes in the back side of the spool. An indicator mark on the end of the spindle shows the orientation of the brake holding pin. Be certain the wire feeds off of the spool in the proper direction.

3. Re-install the retaining collar. Make sure that the release bar snaps out and that the retaining collar fully engages the groove on the spindle

WIRE DRIVE CONFIGURATION

(See Figure A.4)

Changing the Gun Receiver Bushing

⚠ WARNING

ELECTRIC SHOCK can kill.

- **Turn the input power OFF at the welding power source before installation or changing drive rolls and/or guides.**
- **Do not touch electrically live parts.**
- **When inching with the gun trigger, electrode and drive mechanism are "hot" to work and ground and could remain energized several seconds after the gun trigger is released.**
- **Do not operate with covers, panels or guards removed or open.**
- **Only qualified personnel should perform maintenance work.**

Tools required:

- 1/4" hex key wrench.

Note: Some gun bushings do not require the use of the thumb screw.

Configuration procedure:

1. Turn power off at the welding power source.
2. Remove the welding wire from the wire drive.
3. Remove the thumb screw from the wire drive.
4. Remove the welding gun from the wire drive.
5. Loosen the socket head cap screw that holds the connector bar against the gun bushing.
   Important: Do not attempt to completely remove the socket head cap screw.
6. Remove the outer wire guide, and push the gun bushing out of the wire drive. Because of the precision fit, light tapping may be required to remove the gun bushing.
7. Disconnect the shielding gas hose from the gun bushing, if required.

FIGURE A.5

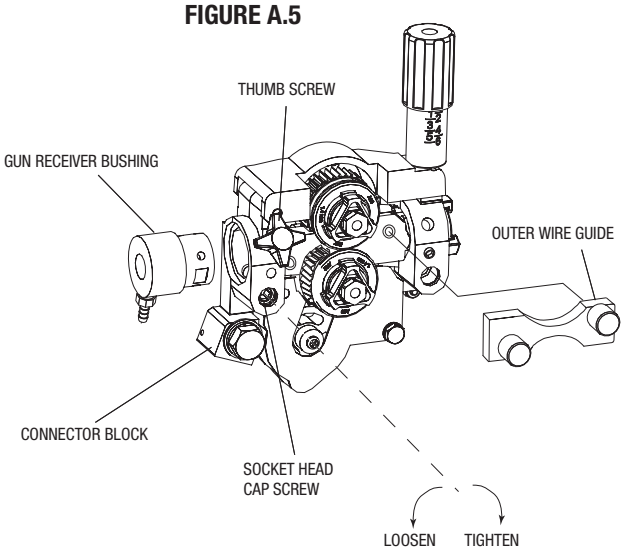

8. Connect the shielding gas hose to the new gun bushing, if required.
9. Rotate the gun bushing until the thumb screw hole aligns with the thumb screw hole in the feed plate. Slide the gun receiver bushing into the wire drive and verify the thumb screw holes are aligned.
10. Tighten the socket head cap screw.
11. Insert the welding gun into the gun bushing and tighten the thumb screw.

PROCEDURE TO INSTALL DRIVE ROLLS AND WIRE GUIDES

⚠ WARNING

- **Turn the input power OFF at the welding power source before installation or changing drive rolls and/or guides.**
- **Do not touch electrically live parts.**
- **When inching with the gun trigger, electrode and drive mechanism are "hot" to work and ground and could remain energized several seconds after the gun trigger is released.**
- **Do not operate with covers, panels or guards removed or open.**
- **Only qualified personnel should perform maintenance work.**

Installation procedure:

1. Turn power off at the welding power source.
2. Release the idle roll pressure arm.
3. Remove the outer wire guide by turning the knurled thumbscrews counter-clockwise to unscrew them from the feed plate.
4. Rotate the triangular lock and remove the drive rolls.

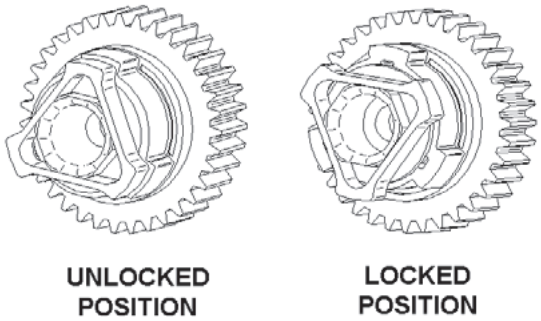

5. Remove the inner wire guide.
6. Insert the new inner wire guide, groove side out, over the two locating pins in the feed plate.
7. Install a drive roll on each hub assembly secure with the triangular lock.
8. Install the outer wire guide by aligning it with the pins and tightening the knurled thumbscrews.
9. Close the idle arm and engage the idle roll pressure arm. Adjust the pressure appropriately

GUN USED

The Magnum® PRO CURVE 300 Ready-Pak is the recommended gun for the POWER WAVE® 300C. Refer to the Magnum PRO CURVE 300 Ready-Pak's operators manual for installation instructions.

FEEDING ELECTRODE AND BRAKE ADJUSTMENT

1. Turn the Reel or spool until the free end of the electrode is accessible.

2. While tightly holding the electrode, cut off the bent end and straighten the first 6" (150 mm). Cut off the first 1" (25 mm) (If the electrode is not properly straightened, it may not feed or may jam causing a "birdnest").

3. Insert the free end through the incoming guide tube.

4. Press the Cold Inch key and push the electrode into the drive roll.

5. Feed the electrode through the gun.

6. Adjust the brake tension with the thumbscrew on the spindle hub, until the reel turns freely but with little or no overrun when wire feeding is stopped. Do not over tighten.

DRIVE ROLL PRESSURE SETTING

⚠ WARNING

ELECTRIC SHOCK can kill.
- **Turn the input power OFF at the welding power source before installation or changing drive rolls and/or guides.**
- **Do not touch electrically live parts.**
- **When feeding with the gun trigger, unless "COLD FEED" trigger mode is selected, the electrode and drive mechanism are always "HOT" to work and ground and could remain "HOT" several seconds after the gun trigger is released.**
- **Do not operate with covers, panels, or guards removed or open.**
- **Only qualified personnel should perform maintenance work.**

The POWER WAVE 300C's optimum drive roll pressure varies with type of wire, surface condition, lubrication, and harness. Too much pressure could cause "birdnesting", but too little pressure could cause wire feed slippage with load and/or acceleration. The optimum drive roll setting can be determined as follows:

1. Press end of gun against a solid object that is electrically isolated from the welder output and press the gun trigger for several seconds.

2. If the wire "birdnests", jams, or breaks at the drive roll, the drive roll pressure is too great. Back the pressure setting out, run new wire through gun, and repeat above steps.

3. If the only result is drive roll slippage, disengage the gun, pull the gun cable forward about 6" (150 mm). There should be a slight waviness in the exposed wire. If there is no waviness, the pressure is too low. Increase the pressure setting turn, reconnect the gun, tighten locking clamp and repeat the above steps.

PRESSURE ARM ADJUSTMENT

The pressure arm controls the amount of force the drive rolls exert on the wire. Proper adjustment of pressure arm gives the best welding performance.

Set the pressure arm as follows: (See Figure A.6)

Aluminum wires	between 1 and 3
Cored wires	between 3 and 4
Steel, Stainless wires	between 4 and 6

FIGURE A.6

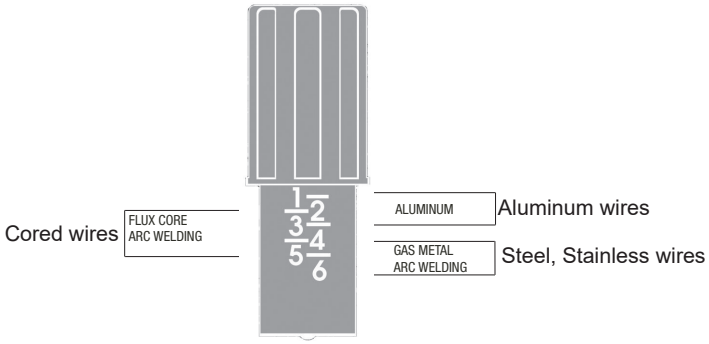

GTAW WELDING

(Figure A.7)

GTAW uses Electrode Negative Polarity so for this application, connect the TIG torch to the negative (-) output stud (standard model) or electrode stud (advanced model) and connect the work clamp to the positive (+) output stud (standard model) or electrode stud (advanced model) The TIG torch gas connection should be connected to the POWER WAVE® 300C's internal gas supply connection. If required a foot amptrol can be connected to the remote control receptacle.

SMAW WELDING

Most SMAW welding procedures use Electrode Positive welding. For these applications, connect the stick electrode holder to the positive (+) output stud (standard model) or electrode stud (advanced model) and connect the work clamp to the negative (-) output stud (standard model) or work stud (advanced model).

Some SMAW welding procedures use Electrode Negative Polarity. For these applications, connect the stick electrode holder to the negative (-) output stud and connect the work clamp to the positive (+) output stud on the standard model.

The advanced model has the ability to self configure the electrode polarity based on the UI selection.

FIGURE A.7

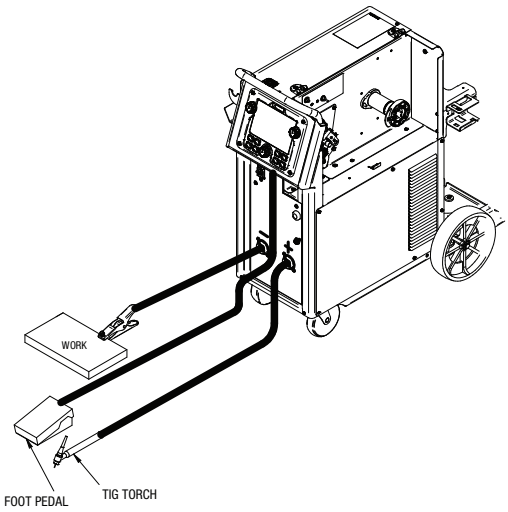

GTAW - ADVANCED MODEL

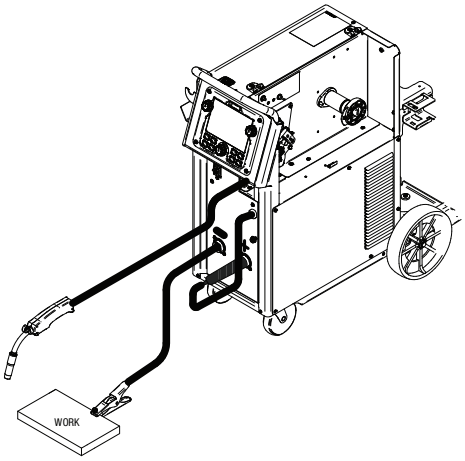

GMAW - STANDARD AND ADVANCED MODELS

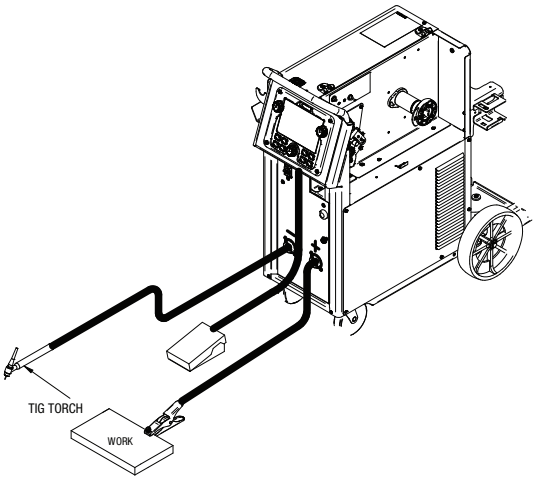

GTAW - STANDARD MODEL

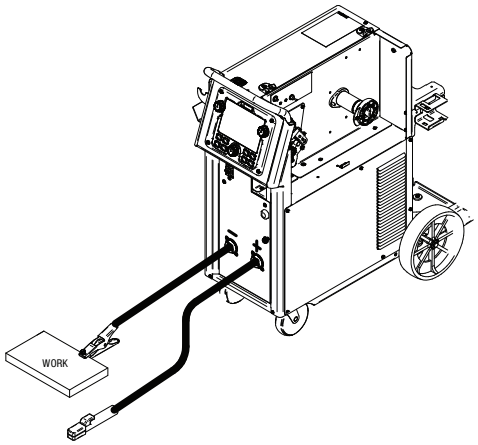

SMAW - STANDARD AND ADVANCED MODELS

SAFETY PRECAUTIONS

READ AND UNDERSTAND ENTIRE SECTION BEFORE OPERATING MACHINE

⚠ WARNING

- **ELECTRIC SHOCK CAN KILL. Unless using COLD FEED feature, when feeding with gun trigger, the electrode and drive mechanism are always electrically energized and could remain energized several seconds after the welding ceases.**
- **Do not touch electrically live part or electrode with skin or wet clothing.**
- **Insulate yourself from work and ground.**
- **Always wear dry insulating gloves.**
- **Do not operate with covers, panels or guards removed or open.**

- **FUMES AN GASES can be dangerous.**
- **Keep your head out of fumes.**
- **Use ventilation or exhaust to remove fumes from breathing zone.**

- **WELDING SPARKS can cause fire or explosion.**
- **Keep flammable material away.**

ARC RAYS can burn.

- **Wear eye, ear and body protection.**

SEE ADDITIONAL WARNING INFORMATION UNDER ARC WELDING SAFETY PRECAUTIONS AND IN THE FRONT OF THIS OPERATING MANUAL.

GRAPHIC SYMBOLS THAT APPEAR ON THIS MACHINE OR IN THIS MANUAL

WARNING OR CAUTION

DANGEROUS VOLTAGE

POSITIVE OUTPUT

NEGATIVE OUTPUT

HIGH TEMPERATURE

STATUS

PROTECTIVE GROUND

REMOTE

WORK - Advanced Model

ELECTRODE - Advanced Model

POWER-UP SEQUENCE

When the POWER WAVE® 300C is powered it can take as long as 30 seconds for the machine to be ready to weld. During this time period the user interface will not be active.

DUTY CYCLE

The POWER WAVE 300C has 100%, 60% and 40% duty cycles. The duty cycle is based on a ten-minute period. A 60% duty cycle represents 6 minutes of welding and 4 minutes of idling in a ten-minute period. See machine specifications section for amperes and machine ratings.

PRODUCT DESCRIPTION

The Power Wave® 300C is a high performance multi-process machine with GMAW, FCAW, SMAW, DC GTAW, and pulse capability. Additionally, the advanced model has the following capabilities:

- STT
- AC Welding Process
- High Frequency GTAW

The Power Wave 300C will provide the following:

- Multi Input Voltage with no reconnect - 208 - 575V (CE Models: 208-415V), 50-60 Hz input.
- Environmentally Hardened - IP21S rated for operating in difficult environments.
- Feeding Options - Standard MIG guns
- Ethernet connectivity - allows access to the Power Wave utilities software tools.

RECOMMENDED PROCESSES AND EQUIPMENT

RECOMMENDED PROCESSES

The Power Wave 300C is a high speed, multi-process welder capable of regulating the current, voltage, or power of the welding arc. With an output range of 5 to 350 amperes, it supports a number of standard processes including synergic GMAW, GMAW-P, FCAW, FCAW-S, SMAW, GTAW and GTAW-P on various steels, Aluminums, and Stainless steels.

The following capabilities are supported:

- 12-Pin Lincoln Electric Accessories such as the GTAW Arc Start Switch (K814-2), GTAW Foot Amptrol (K870-2), and GTAW Hand Amprol (K963-4), GMAW Magnum Pro 250 LX GT Spool Gun (K3569-2 w/K2910-1), and Magnum Pro AL Push-Pull Guns.
- Standard MIG gun trigger connection (4-pin).
- The unit will have the K1500-1 gun bushing for LECO backend connections.
- Simple process to switch between different welding processes.

PROCESS LIMITATIONS

The software based weld tables of the Power Wave 300C limit the process capability within the output range and the safe limits of the machine. In general the processes will be limited to .035-.045 solid steel and stainless wire, .045-1/16 cored wire, as well as .035, 3/64, and 1/16 Aluminum wire.

The following items will not be supported on the standard model, but are supported by the advanced model in the product portfolio:

- STT
- AC welding processes

⚠ WARNING

The Power Wave 300C is not recommended for pipe thawing.

EQUIPMENT LIMITATIONS

- Maximum gun length is 25 ft (7.6m) for push-only systems.
- Maximum spool size is 12 in (305 mm) diameter.
- Maximum spool weight is 44 lb (20 kg).
- Other gun bushings are required for welding guns that do not have a Magnum (Tweco #2-#4 compatible) back end.

DESIGN FEATURES

Loaded with Standard Features

- Multiple process DC output range: 5 - 350 Amps.
- 208 - 575V (CE Models: 208-415V), 1 or 3 phase, 50-60Hz input power.
- New and improved Line Voltage Compensation holds the output constant over wide input voltage fluctuations.
- Utilizes next generation microprocessor control, based on the ArcLink® platform.
- State of the art power electronics technology, yields superior welding capability.
- Electronic over current protection.
- Input over voltage protection.
- F.A.N. (fan as needed). Cooling fan runs when the output is energized 15 seconds following the strike of the welding arc and will continue to run 4 minutes following the end of the weld.
- Thermostatically protected for safety and reliability.
- Recessed connection panel for protection against accidental impact.
- Ethernet connectivity via IP-67 rated ODVA compliant RJ-45 connector.
- Panel mounted Status and Thermal LED indicators facilitate quick and easy troubleshooting.
- Potted PC boards for enhanced ruggedness/reliability.
- Remote control/Foot amptrol ready.
- Waveform Control Technology™ for good weld appearance and low spatter, even when welding nickel alloys.
- 4 memories for easily selecting procedures.
- Full sequence control for tailoring the weld from start to end.
- Patented MAXTRAC™ 2 roll drive system.
- Patent pending drive rolls improve traction on solid wire by up to 20%.
- Patented split wire guides fully support the wire and virtually eliminate birdnesting.
- No tools required to change the drive rolls and wire guides.
- Patent pending dual spring pressure arms have sensitivity for feeding soft wires without crushing them, and have plenty of compression force for feeding solid or stiff wires.
- All gear driven rolls for more feeding force.
- Changeable gun bushings easily accept guns from other manufacturers.
- Brass-to-brass connections between the electrode connection and the gun minimize voltage drop variations, resulting in consistent arc performance all day, every day.
- Powerful, quiet motor with integrated tachometer for accurate WFS regulation.

CASE FRONT CONTROLS - STANDARD MODEL

FIGURE B.1

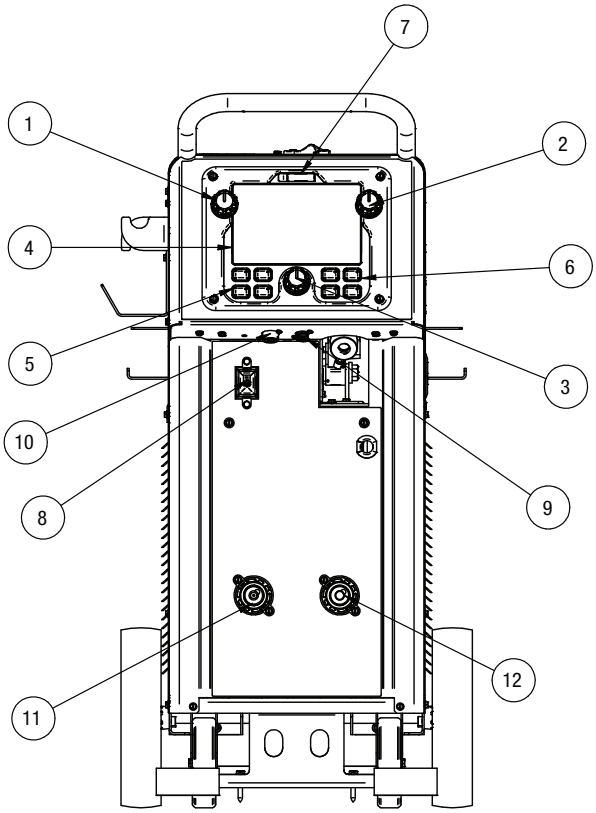

All operator controls and adjustments are located on the case front of the Power Wave (**See Figure B.1**).

1. **PROCESS ADJUSTMENT KNOB -** Adjusts Wire Feed Speed/Amps.

2. **PROCESS ADJUSTMENT KNOB -** Adjusts Voltage/Trim.

3. **NAVIGATION/SELECT KNOB -** Use to Navigate/ Select settings or process.

4. **MAIN DISPLAY -** Shows detailed welding/ process information.

5. **PROCESS SELECTION BUTTONS -** Quick common procedures selection.

6. **MEMORY SELECTION BUTTONS -** Use to save up to 4 process memories.

7. **USB PORT**

8. **ON/OFF SWITCH**

9. **GUN TRIGGER CONNECTOR**

10. **12-PIN REMOTE CONNECTOR**

11. **NEGATIVE (-) OUTPUT STUD**

12. **POSITIVE (+) OUTPUT STUD**

CASE FRONT CONTROLS - ADVANCED MODEL

FIGURE B.2

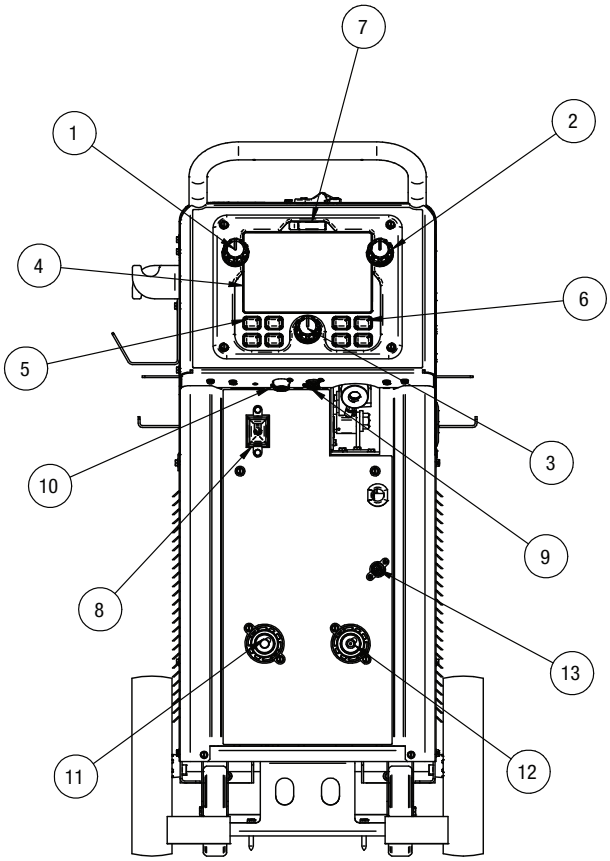

All operator controls and adjustments are located on the case front of the Power Wave (**See Figure B.2**).

1. **PROCESS ADJUSTMENT KNOB -** Adjusts Wire Feed Speed/Amps.

2. **PROCESS ADJUSTMENT KNOB -** Adjusts Voltage/Trim.

3. **NAVIGATION/SELECTION KNOB -** Use to Navigate/ Select settings or process.

4. **MAIN DISPLAY -** Shows detailed welding/ process information.

5. **PROCESS SELECTION BUTTONS -** Quick common procedures selection.

6. **MEMORY SELECTION BUTTONS -** Use to save up to 4 process memories.

7. **USB PORT**

8. **ON/OFF SWITCH**

9. **GUN TRIGGER CONNECTOR**

10. **12-PIN REMOTE CONNECTOR**

11. **WORK OUTPUT STUD**

12. **ELECTRODE OUTPUT STUD**

13. **SENSE LEAD CONNECTOR**

CASE BACK CONTROLS - STANDARD AND ADVANCED MODELS

FIGURE B.3

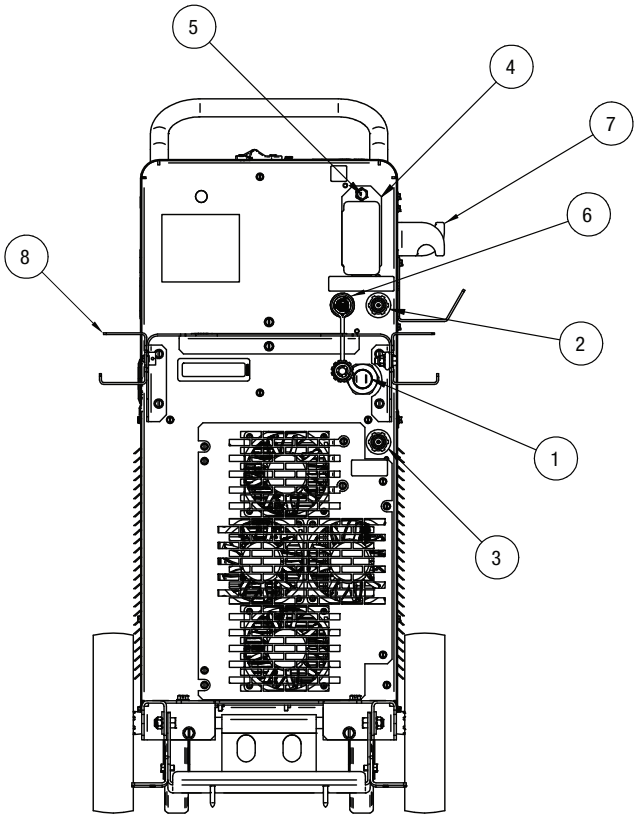

1. **POWER CORD LOCATION**
2. **GAS CONNECTION, GMAW AND FCAW**
3. **GAS CONNECTION, GTAW**
4. **OPTIONAL - 115 VOLT, 10 AMPS 60 Hz RECEPTACLE FOR GENERAL USE - K2829-1**
5. **CIRCUIT BREAKER**
6. **ETHERNET CONNECTOR**
7. **COIL CLAW™**
8. **TOOL HOLDER**

INTERNAL CONTROLS - STANDARD AND ADVANCED MODELS

FIGURE B.4

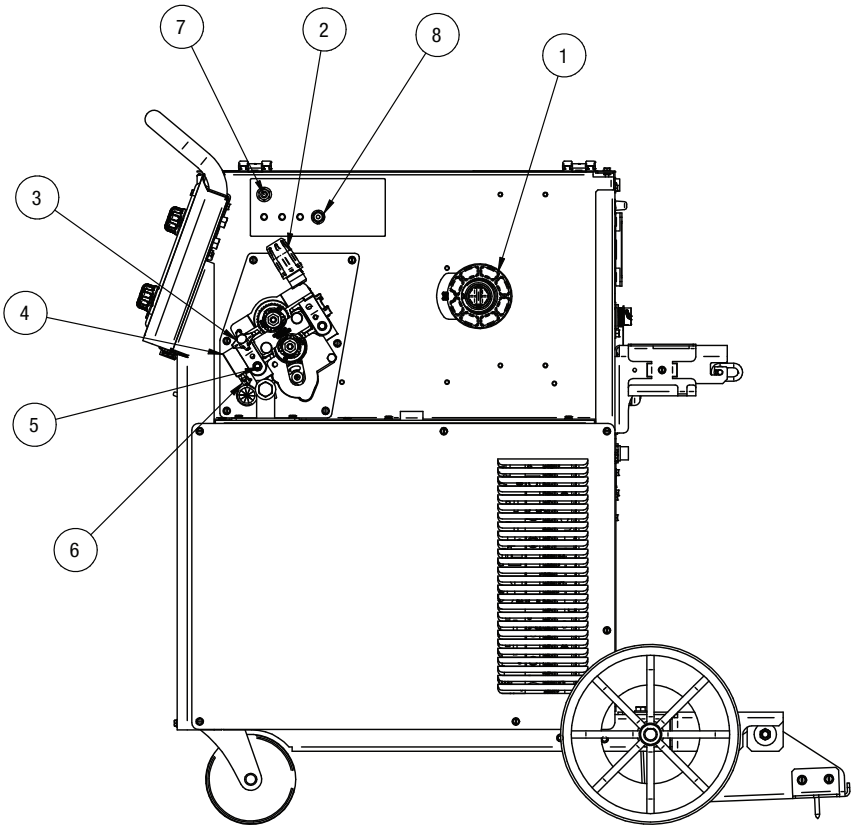

1. SPINDLE BRAKE
2. WIRE DRIVE PRESSURE ARM
3. THUMB SCREW FOR SECURING THE WELDING GUN
4. GUN BUSHING
5. SOCKET HEAD CAP SCREW FOR SECURING THE GUN BUSHING
6. GAS CONNECTION, GMAW OR FCAW GUN
7. CIRCUIT BREAKER
8. COLD INCH / GAS PURGE SWITCH

MAKING A WELD WITH WAVEFORM TECHNOLOGY POWER SOURCES

⚠ WARNING

MAKING A WELD

The serviceability of a product or structure utilizing the welding programs is and must be the sole responsibility of the builder/user. Many variables beyond the control of The Lincoln Electric Company affect the results obtained in applying these programs. These variables include, but are not limited to, welding procedure, plate chemistry and temperature, weldment, design, fabrication methods, and service requirements. The available range of a welding program may not be suitable for all applications, and the build/user is and must be solely responsible for welding program selection.

Choose the electrode material, electrode size, shielding gas, and process (GMAW, GMAW-P etc.) appropriate for the material to be welded.

Select the weld mode that best matches the desired welding process. The standard weld set shipped with the POWER WAVE 300C encompasses a wide range of common processes that will meet most needs.

All adjustments are made through the user interface. Because of the different configuration options your system may not have all of the following adjustments. Regardless of availability, all controls are described in the following section (See Figure B.4 Panel Controls Used)

DEFINITION OF WELDING MODES

NON-SYNERGIC WELDING MODES

- A **Non-synergic** welding mode requires all welding process variables to be set by the operator.

SYNERGIC WELDING MODES

- A **Synergic** welding mode offers the simplicity of single knob control. The machine will select the correct voltage and amperage based on the wire feed speed (WFS) set by the operator.

BASIC WELDING CONTROLS

WELD MODE

Selecting a weld mode determines the output characteristics of the Power Wave power source. Weld modes are developed with a specific electrode material, electrode size, and shielding gas. For a more complete description of the weld modes programmed into the Power Wave at the factory, refer to the **Weld Set Reference Guide** available at **www.powerwavesoftware.com**

WIRE FEED SPEED (WFS)

In synergic welding modes (synergic CV, GMAW-P), WFS is the dominant control parameter. The user adjusts WFS according to factors such as wire size, penetration requirements, heat input, etc. The Power Wave then uses the WFS setting to adjust the voltage and current according to settings contained in the Power Wave.

In non-synergic modes, the WFS control behaves like a conventional power source where WFS and voltage are independent adjustments. Therefore, to maintain proper arc characteristics, the operator must adjust the voltage to compensate for any changes made to the WFS.

AMPS

In constant current modes, this control adjusts the welding current.

VOLTS

In constant voltage modes, this control adjusts the welding voltage.

TRIM

In pulse synergic welding modes, the Trim setting adjusts the arc length. Trim is adjustable from 0.50 to 1.50. 1.00 is the nominal setting and is a good starting point for most conditions.

ULTIMARC™ CONTROL

UltimArc™ Control allows the operator to vary the arc characteristics from “soft” to “crisp”. UltimArc™ Control is adjustable from –10.0 to +10.0 with a nominal setting of 0.0.

USER INTERFACE LAYOUT

FIGURE B.5

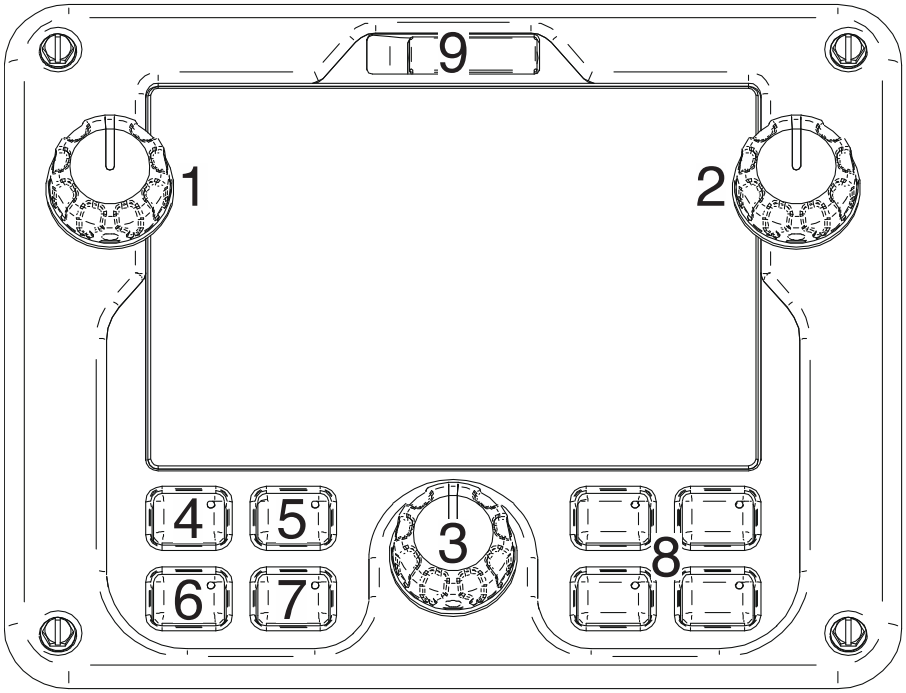

1. Process Adjustment Knob: Turn to adjust setpoint (dependent on the process).
2. Process Adjustment Knob: Turn to adjust setpoint (dependent on the process).
3. Navigation/Select Knob: Turn to scroll through the menu and press to select a highlighted option.
4. SMAW Button: Press to set the system to SMAW mode.
5. GTAW Button: Press to set the system to GTAW mode.
6. FCAW Button: Press to set the system to FCAW mode.
7. GMAW Button: Press to set the system to GMAW mode.
8. Memory Buttons: Memories can be saved for each welding process. See Section B19 for additional information.
9. USB Connector: A USB drive can be inserted to upload/download memories and update the user interface software.

SIMPLIFIED HOME SCREEN

FIGURE B.14

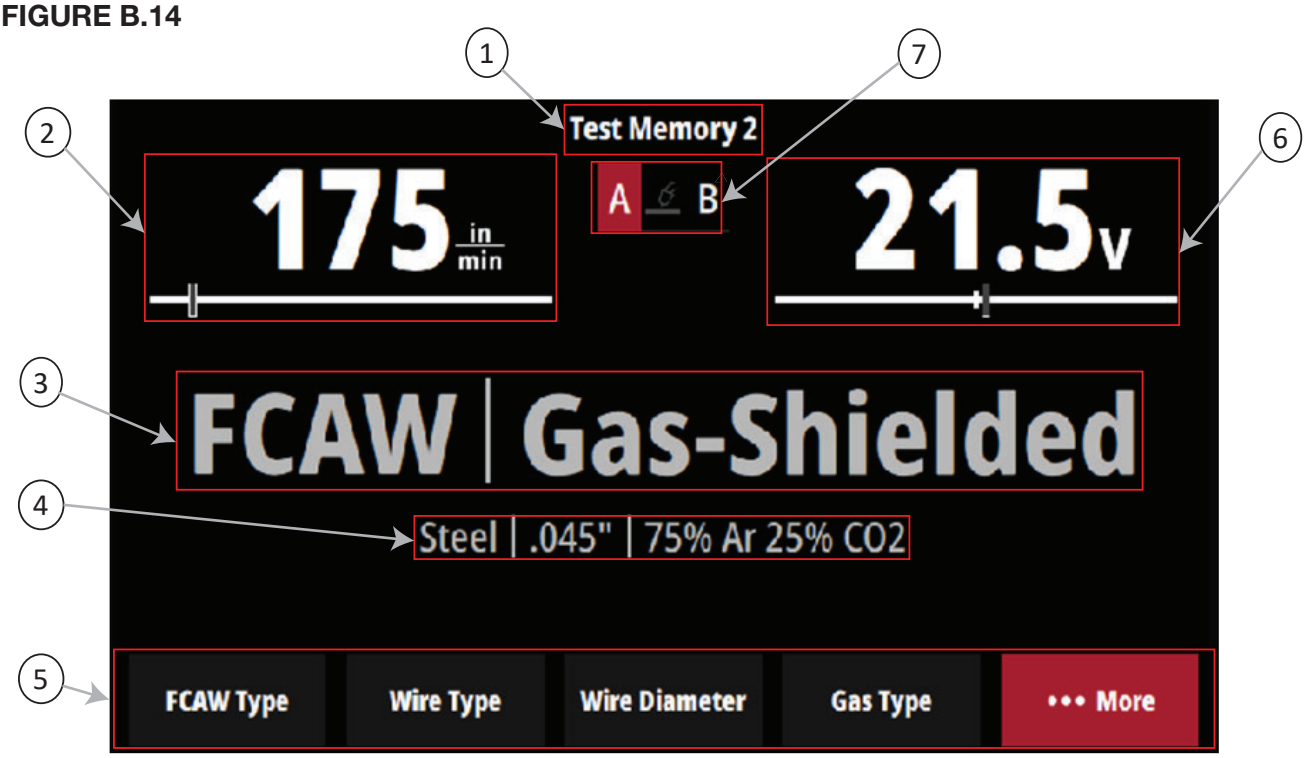

1. Memory Name
2. Wire Feed Speed Setting - Sets the desired wire feed speed, use left knob to adjust.
3. Weld Mode
4. Wire Type, Wire Diameter, and Gas Type Selection (Can be modified in the Menu Bar)
5. Menu Bar - Use the Menu knob to scroll through the options along the bottom of the screen. Press the knob to select the highlighted option.
6. Voltage Setting - Sets the voltage.
7. Dual Procedure Indicator - Displays the active welding procedure/schedule. Pressing the active process button switches between the procedure/schedule options.

NOTE: In Simplified mode, advanced settings will not appear on the home screen even when set to a non-zero value.

USER INTERFACE NAVIGATION

SMAW HOME SCREEN (ADVANCED VIEW)

FIGURE B.6

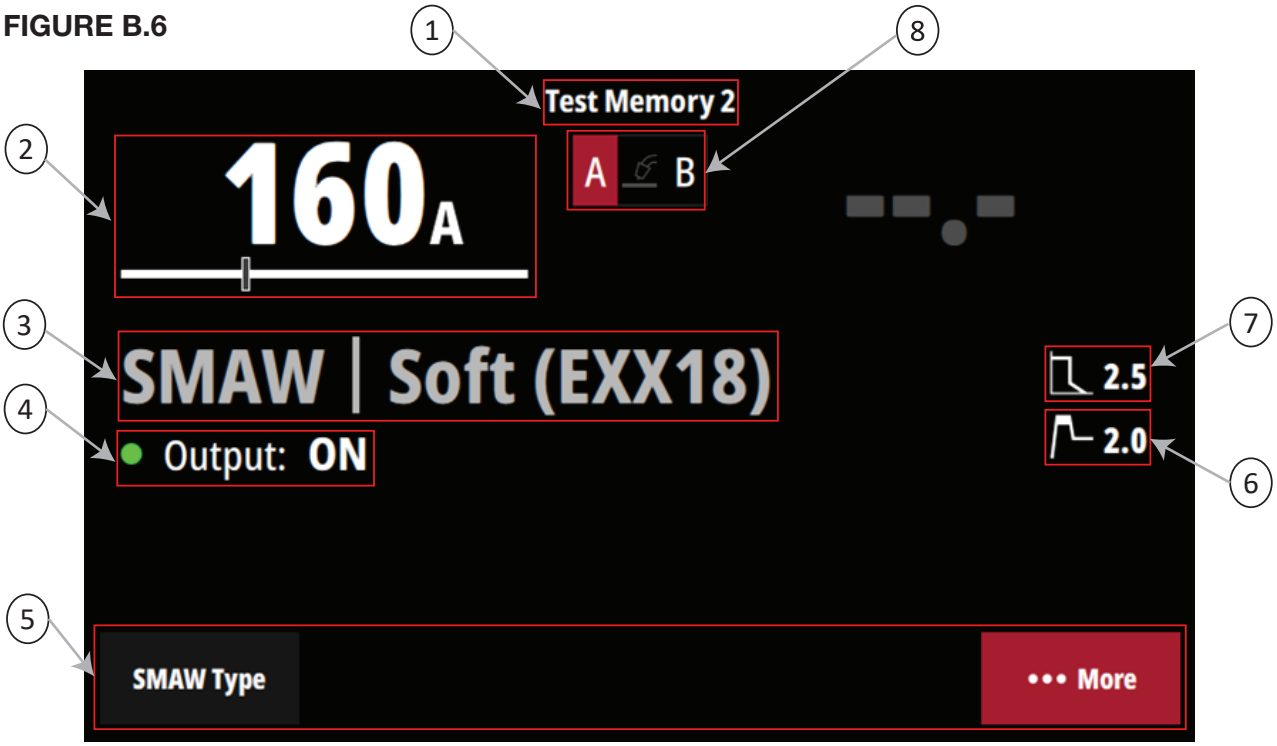

1. Memory Name
2. Current Settings - Sets the desired current, use left knob to adjust. To adjust the allowable ranges to be set by a remote.
3. Weld Mode
4. Output Indicator (Note: Output is “ON” at all times in SMAW process).
5. Menu Bar - Use the Menu knob to scroll through the options along the bottom of the screen. Press the knob to select the highlighted option.
6. Hot Start
7. Arc Force
8. Dual Procedure Indicator - Displays the active welding procedure/schedule. Pressing the active process button switches

GTAW HOME SCREEN (ADVANCED VIEW)

FIGURE B.7

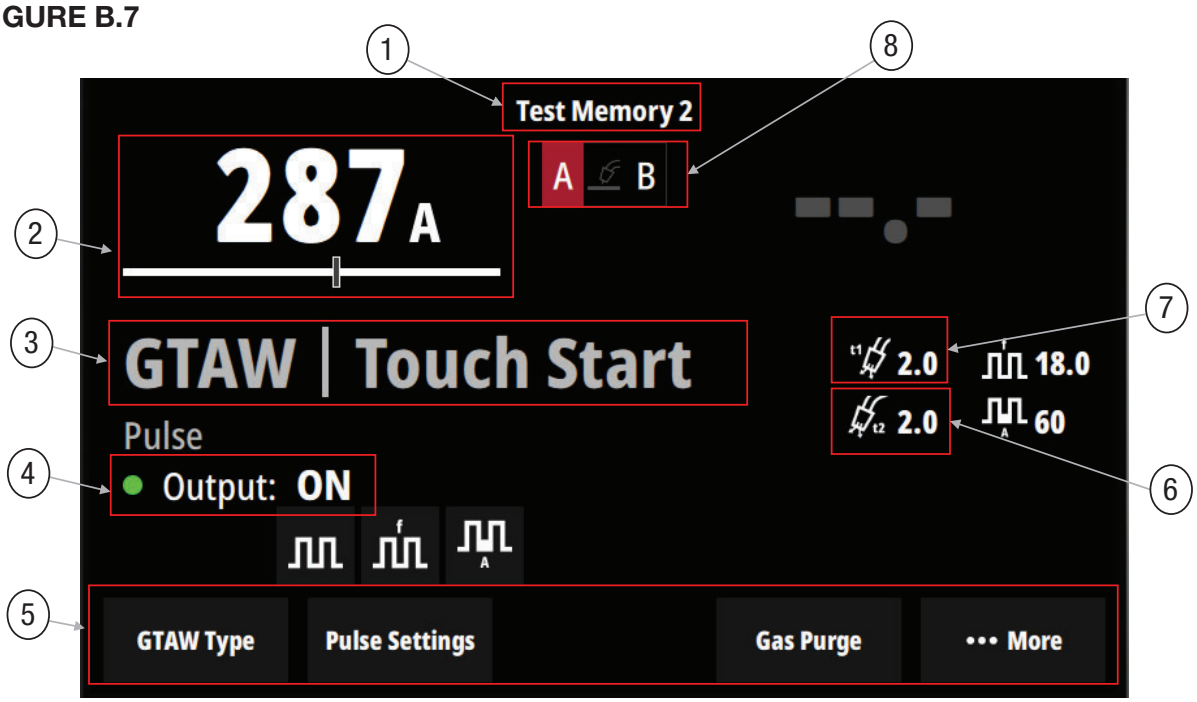

1. Memory Name
2. Current Setting - Sets the desired current. Use left knob to adjust.
3. Weld Mode
4. Output Indicator - Output will be on in Touch Start mode without a remote. Output will be off until triggered when a remote is connected. **Note**: HF mode requires a remote to be connected.
5. Menu Bar - Use the Menu knob to scroll through the options along the bottom of the screen. Press the knob to select the highlighted option.
6. Balance
7. Frequency
8. Dual Procedure Indicator - Displays the active welding procedure/schedule. Pressing the active process button switches between the procedure/schedule options.

GTAW START/END SETTINGS

FIGURE B.8

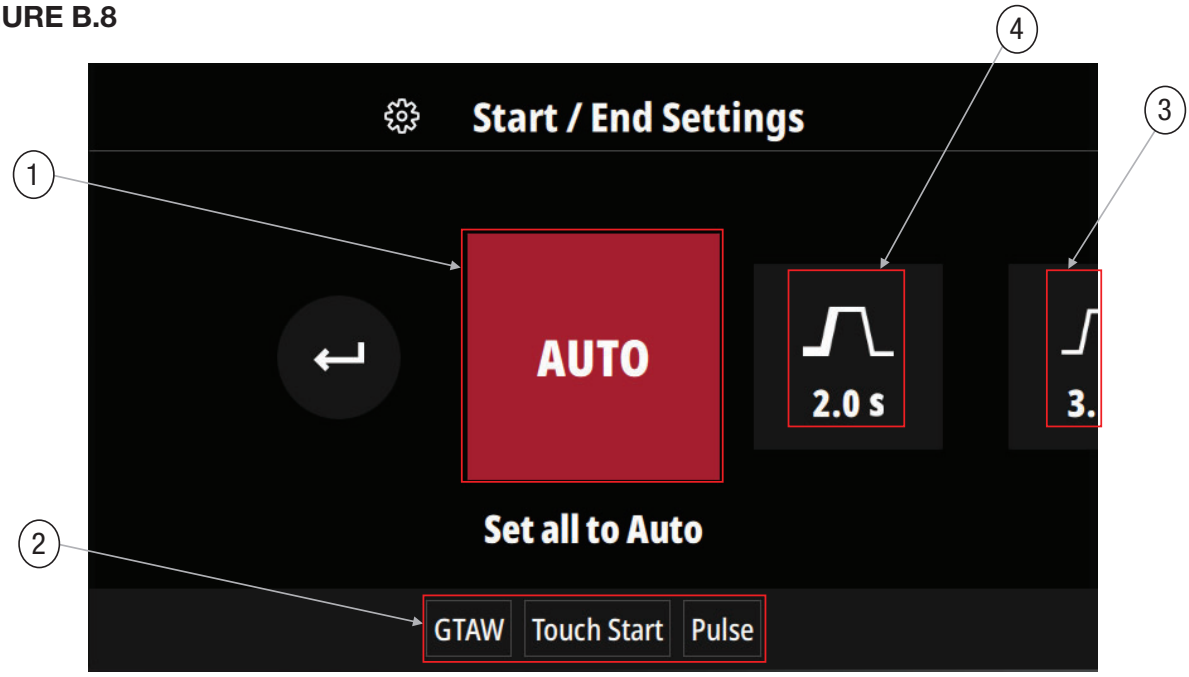

1. Set all to Auto – Start/End settings are set to “auto” by default. These settings are programmed based on process and setpoint to provide ideal welding.
2. Active Weld Settings
3. Crater Time - Controls the voltage for a specified time at the end of the weld after the trigger is released. During the Crater Time, the machine will ramp from the Weld Procedure to the Crater Procedure.
4. Start Time - Controls the voltage for a specified time at the beginning of the weld. During that time, the machine will ramp from the Start Procedure to the Welding Procedure.

FCAW HOME SCREEN

FIGURE B.9

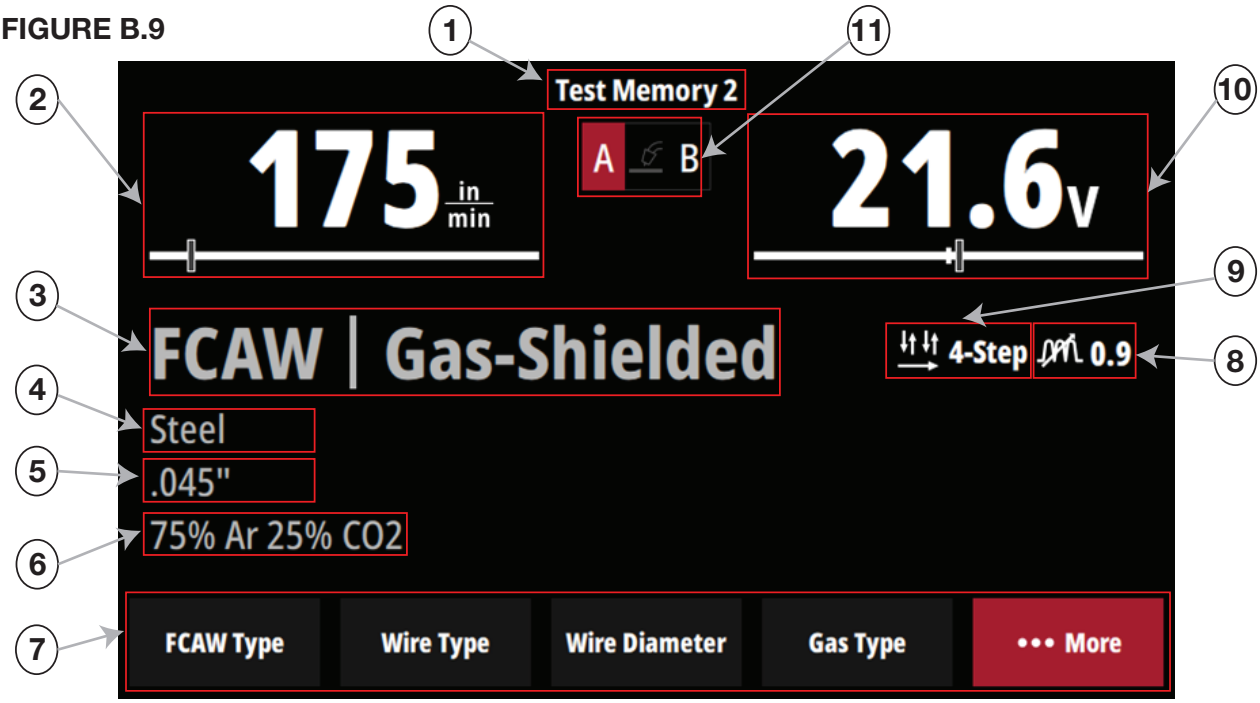

1. Memory Name
2. Wire Feed Speed Settings - Sets the desired wire feed speed. Use left knob to adjust.
3. FCAW Selection Type
4. Wire Type Selection
5. Wire Diameter Selection
6. Gas Type Selection
7. Menu Bar - Use the Menu knob to scroll through the options alongs the bottom of the screen. Press the knob to select the highlighted option.
8. Pinch - Controls the arc characteristics when short-arc welding.
9. 2-Step/4-Step Trigger Interlock - Toggles between 2-Step and 4-Step Trigger Interlock. 2-Step provides weld power and feeds wire only when the trigger is depressed. 4-Step eliminates the need to hold the trigger while welding. It operates in 4 steps:
   - Close trigger and establish welding arc.
   - Release trigger and continue welding.
   - Reclose trigger near end of weld.
   - Release trigger again to stop welding.

   NOTE: No symbol will be shown if 2-Step mode is active.
10. Voltage Setting - Sets the voltage. Use right knob to adjust.
11. Dual Procedure Indicator - Displays the active welding procedure/schedule. Pressing the active process button switches between the procedure/schedule options.

FCAW HOME SCREEN (ADVANCED VIEW)

FIGURE B.10

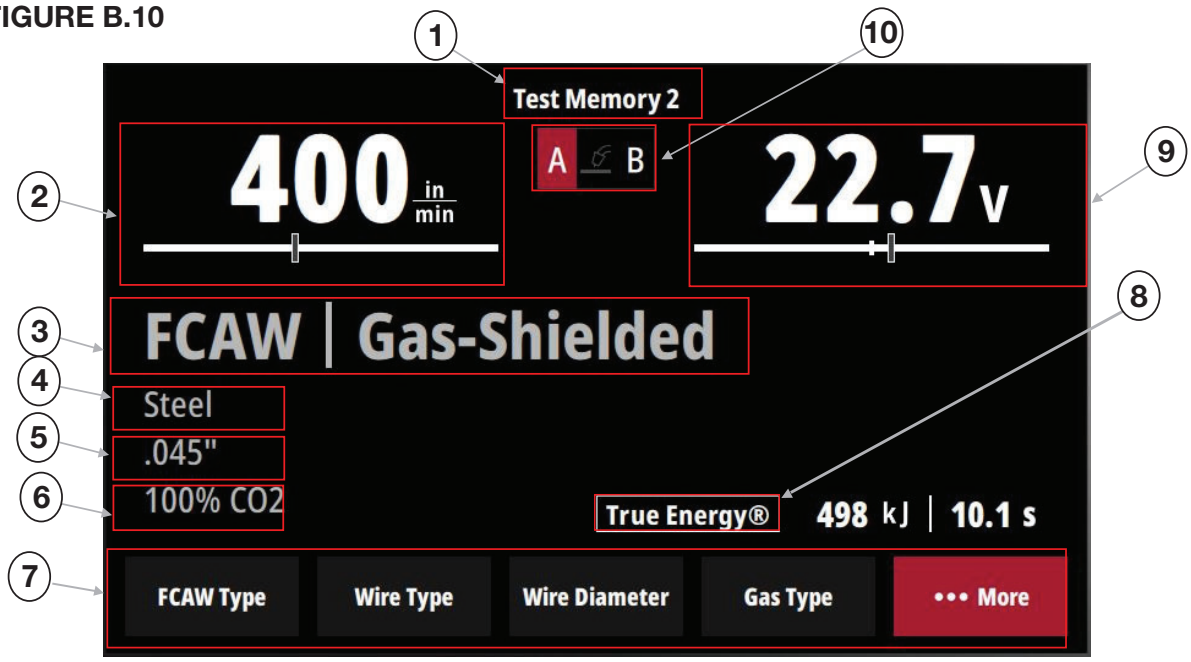

1. Memory Name
2. Wire Feed Speed Settings - Sets the desired wire feed speed. Use left knob to adjust.
3. Weld Mode
4. Wire Type Selection
5. Wire Diameter Selection
6. Gas Type Selection
7. Menu Bar - Use the Menu knob to scroll through the options alongs the bottom of the screen. Press the knob to select the highlighted option.
8. True Energy - Automatically calculates the heat input for the weld.
9. Voltage Setting - Sets the voltage. Use right knob to adjust.
10. Dual Procedure Indicator - Displays the active welding procedure/schedule. Pressing the active process button switches between the procedure/schedule options.

GMAW HOME SCREEN (ADVANCED VIEW)

FIGURE B.11

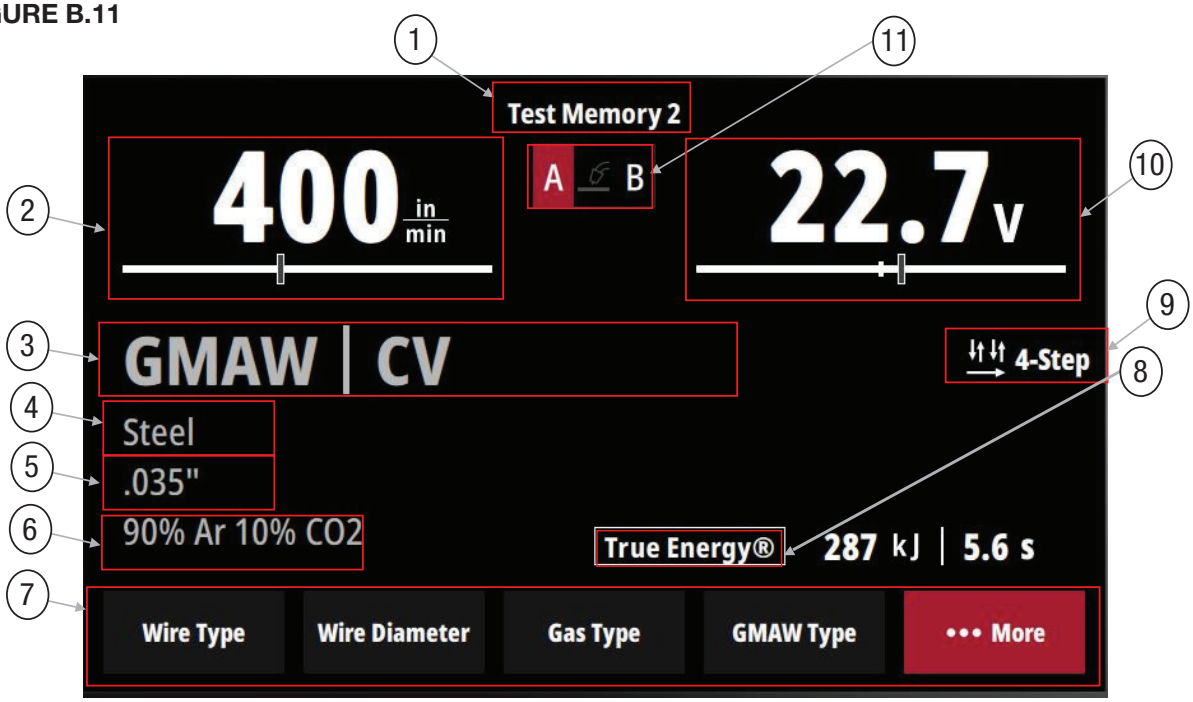

1. Memory Name
2. Wire Feed Speed Setting - Sets the desired wire feed speed. Use Left knob to adjust.
3. GMAW Mode Selection
4. Wire Type Selection
5. Wire Diameter Selection
6. Gas Type Selection
7. Menu Bar - Use the Mennu knob to scroll through the options along the bottom of the screen. Press the knob to select the highlighted option.
8. True Energy - Automatically calculates the heat input for the weld.
9. 2-Step/4-Step Trigger Interlock - Toggles between 2-Step and 4-Step Trigger Interlock.
10. Voltage/Trim Setting - Sets the voltage or trim. Use right knob to adjust.
11. Dual Procedure Indicator - Displays the active welding procedure/schedule. Pressing the active process button switches between the procedure/schedule options.

FCAW/GMAW START/END SETTINGS

FIGURE B.12

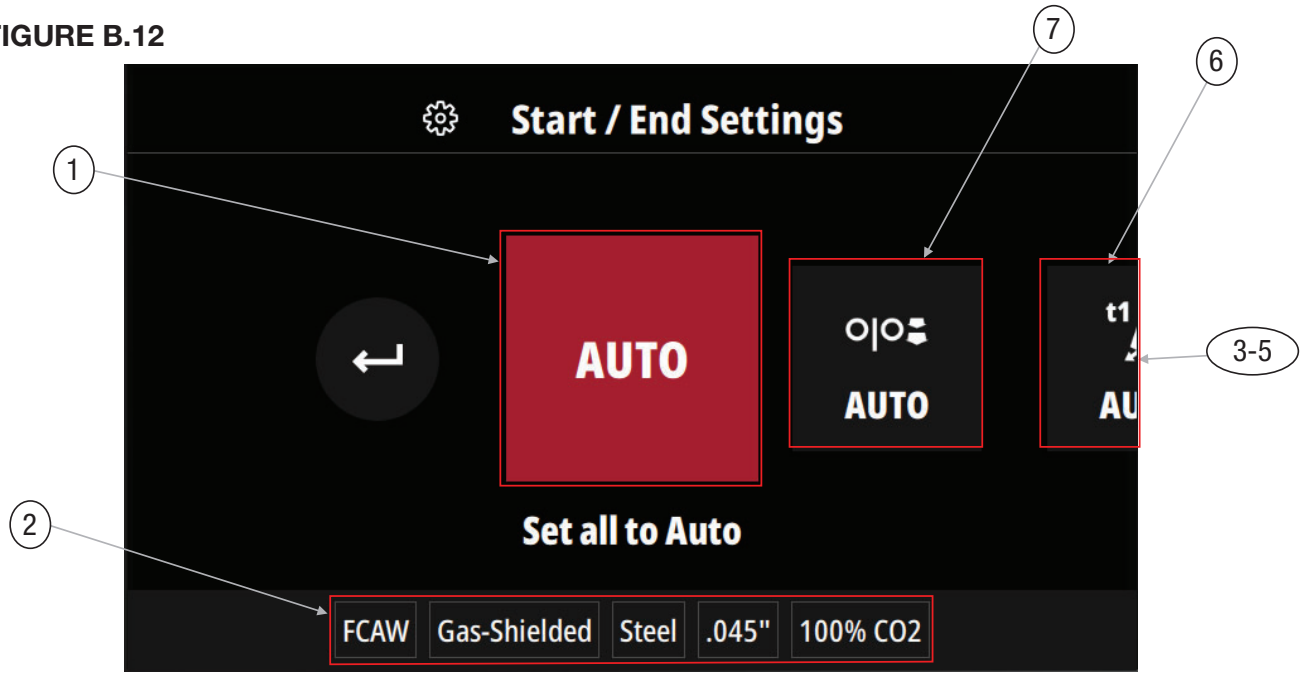

1. Set all to Auto - Start/end settings are set to “Auto” by default. These settings are programmed based on process and setpoint to provide ideal welding. The settings may be adjusted if desired.
2. Active Weld Settings
3. Start Time - Controls the WFS and volts for a specific time at the beginning of the weld. During the start time, the machine will ramp from the Start Procedure to the preset Welding Procedure.
4. Crater Time - Controls the WFS and voltage for a specific time at the end of the weld after the trigger is released. During the Crater time, the machine will ramp from the Weld Procedure to the Crater Procedure.
5. Post Flow Time - Adjusts the time that shielding gas flows after the welding output turns off.
6. Pre-Flow Time - Adjusts the time that shielding gas flows before the welding output turns on.
7. Run-In - Allows adjusting the wire feed speed prior to the arc being established. A low run-in speed permits smooth arc starts. After the arc is speed will change from run-in to welding wire feed speed. The run-in option is available in GMAW and FCAW modes.

TIG HOME SCREEN (ADVANCED VIEW)

FIGURE B.13

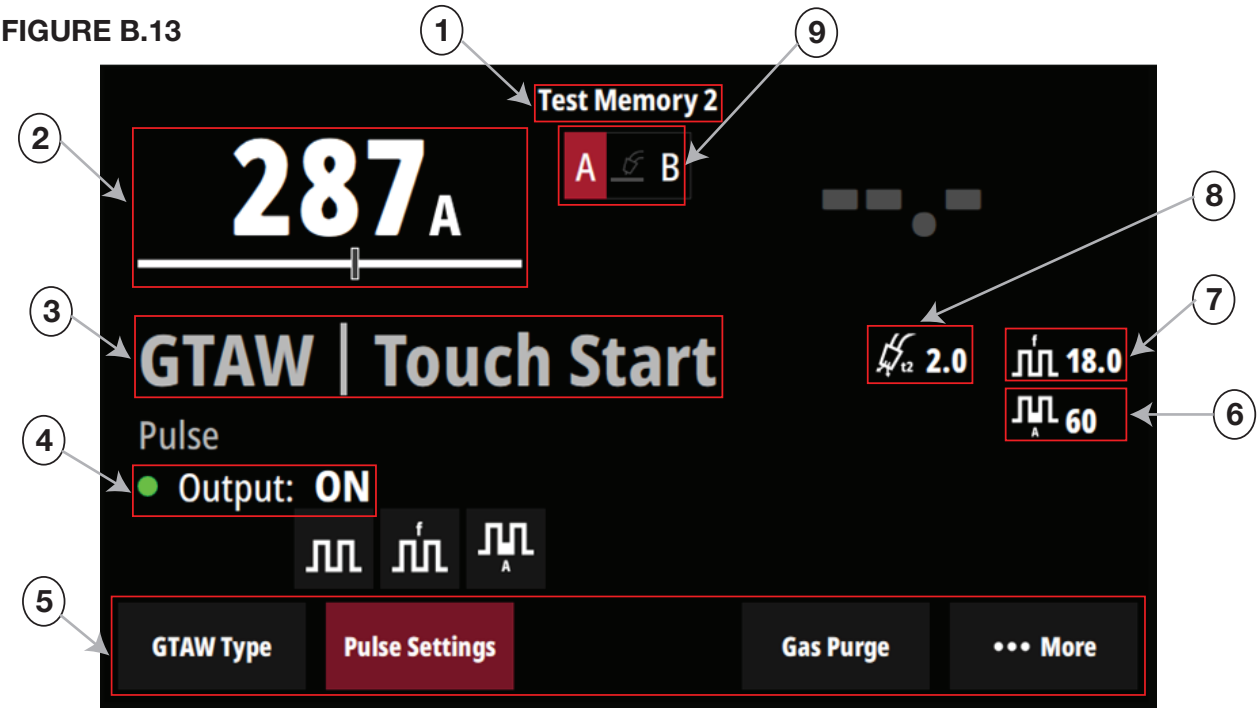

1. Memory Name
2. Current Setting - Sets the desired current. Use left knob to adjust.
3. Weld Mode
4. Output Indicator - Output will be on in Touch Start mode without a remote. Output will be off unless triggered when a remote is connected. (Note: HF mode requires a remote to be connected).
5. Menu Bar - Use the menu knob to scroll through the option along the bottom of the screen. Press the knob to select the highlighted option.
6. Background
7. Frequency
8. Postflow Time
9. Dual Procedure Indicator - Displays the active welding procedure/schedule. Pressing the active process button switches between the procedure/schedule options.

TIG ADVANCED SETTINGS (CHECK SCREEN IN MACHINE)

FIGURE B.14

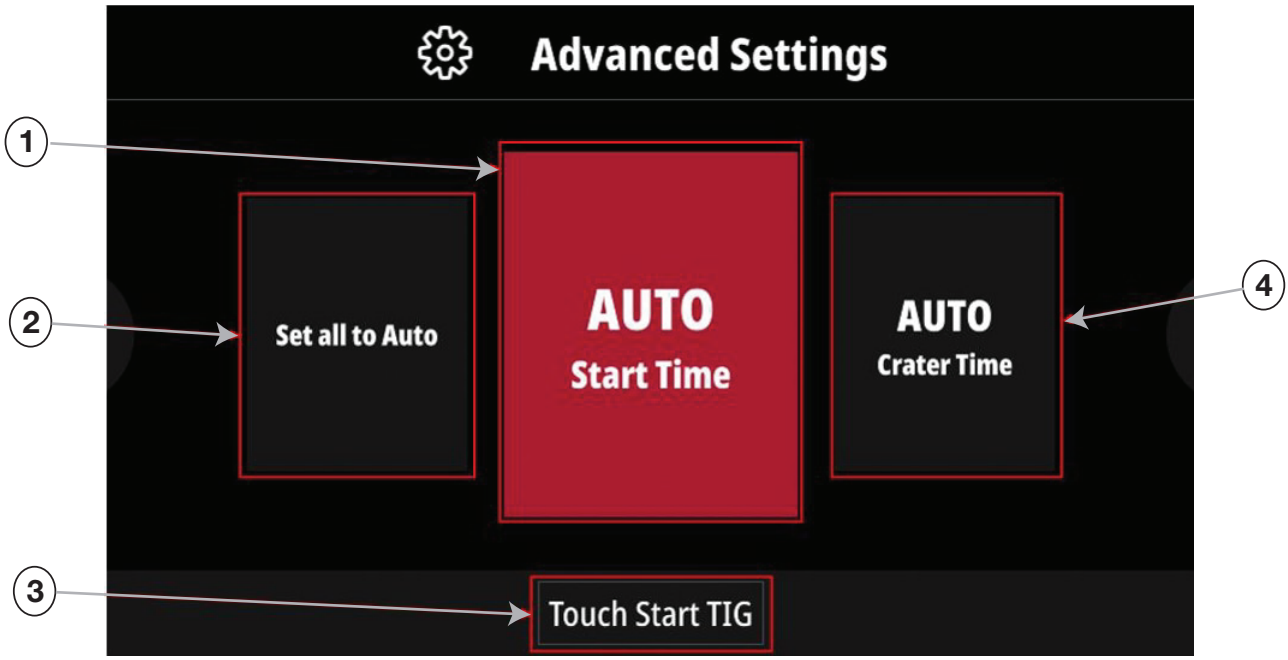

1. Start Time - Controls the WFS and voltage for a specified time at the end of the weld after the trigger is released. During the Crater time, the machine will ramp from the Weld Procedure to the Crater Procedure.
2. Set All To Auto - Advanced settings are set to “auto” by default. These settings are programmed based on process and set point to provide ideal welding. The settings may be adjusted if desired.
3. Current Settings
4. Crater Time - Controls the WFS and voltage for a specified time at the end of the weld after the trigger is released. During the Crater time, the machine will ramp from the Weld Procedure to the Crater Procedure.

MIG HOME SCREEN

FIGURE B.15

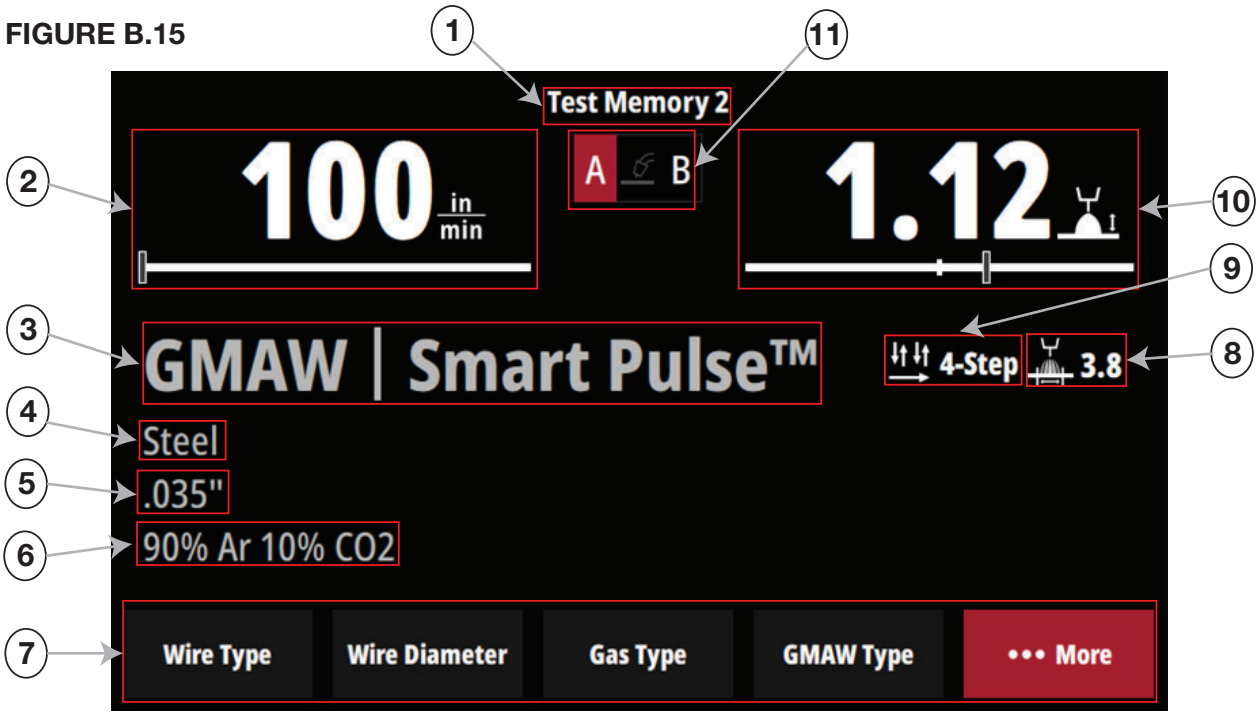

1. Memory Name
2. Wire Feed Speed Setting - Sets the desired wire feed speed. Use left knob to adjust.
3. MIG Selection Type
4. Wire Type Selection
5. Wire Diameter Selection
6. Gas Type Selection
7. Menu Bar - Use the menu knob to scroll through the option along the bottom of the screen. Press the knob to select the highlighted option.
8. Pinch - Controls the arc characteristics when short-arc welding.
9. 2-Step/4-Step Trigger Interlock
10. Voltage Setting - Sets the voltage. Use right knob to adjust.
11. Voltage/Trim Setting - Sets the voltage or trim. Use right knob to adjust.

FCAW/MIG ADVANCED SETTINGS

FIGURE B.16

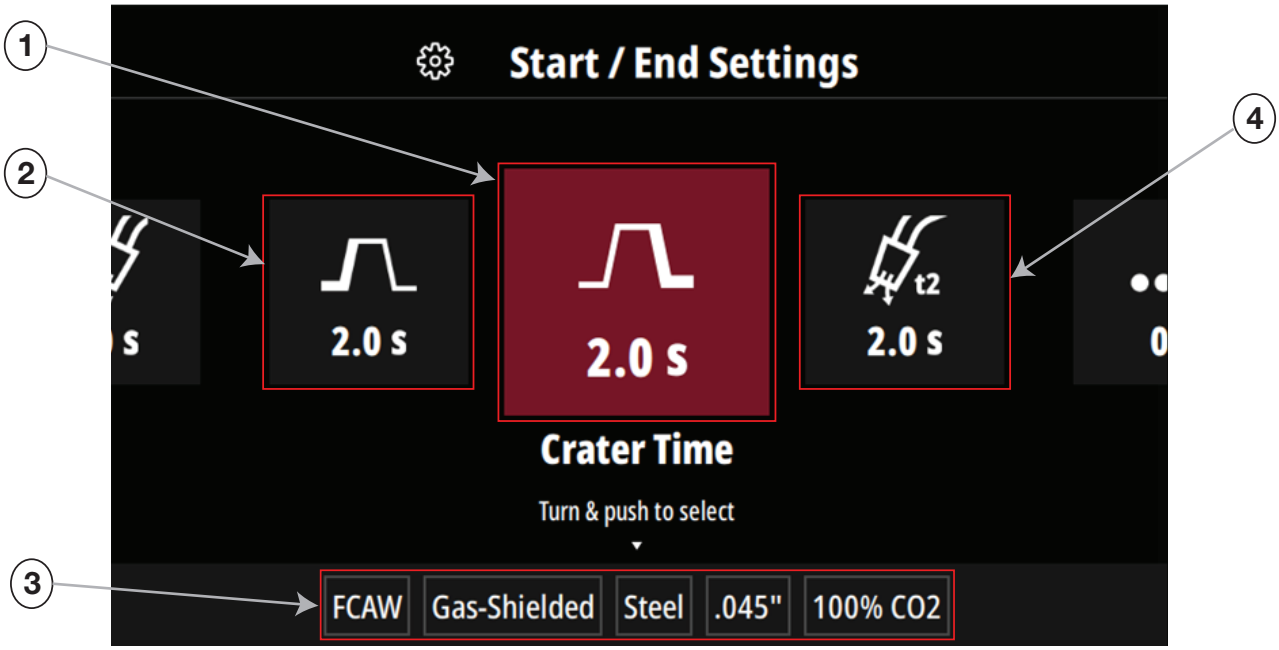

1. Run In - Allows adjusting the wire feed speed prior to the arc being established. A low run-in speed permits smooth arc starts. After the arc is struck, the speed will change from run-in wire feed speed to welding wire feed speed. The run-in option is available in MIG and FCAW modes.
2. Set All To Auto - Advanced settings are set to “auto” by default. These settings are programmed based on process and set point to provide ideal welding. The settings may be adjusted if desired.
3. Pre-Flow Time - Adjusts the time that shielding gas flows before the welding output turns on.
4. Current Settings

FCAW/MIG ADVANCED SETTINGS CONTINUED

FIGURE B.17

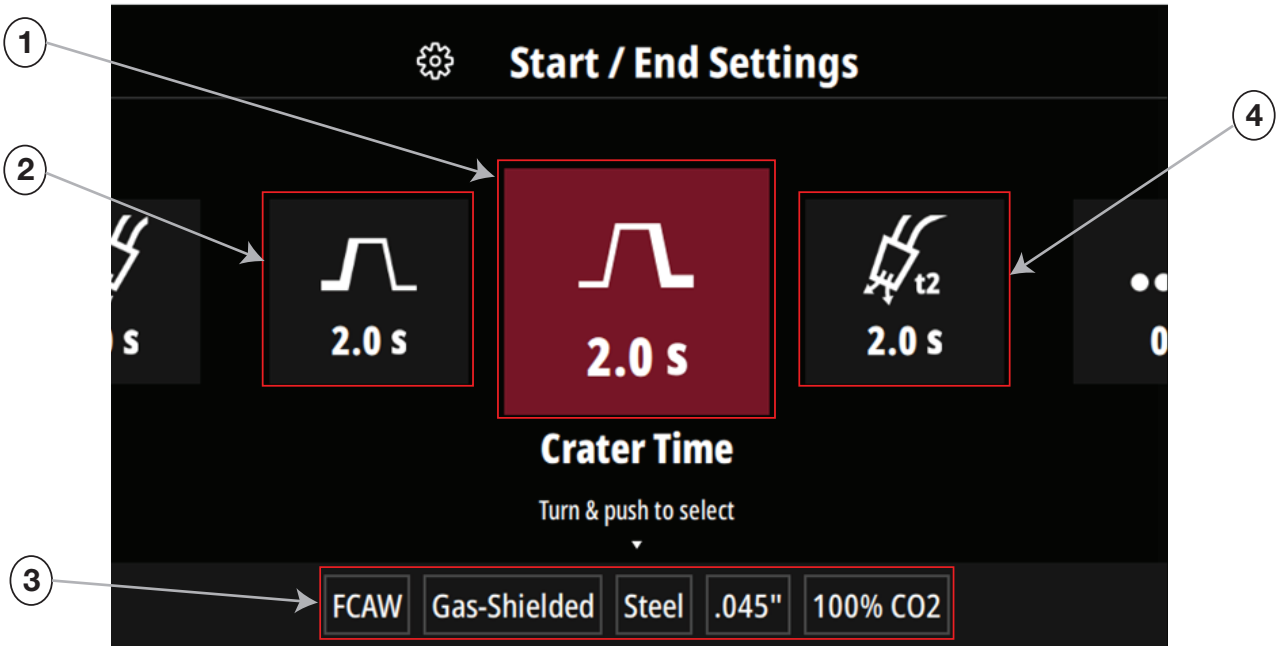

1. Crater Time - Controls the WFS and voltage for a specified time at the end of the weld after the trigger is released. During the Crater time, the machine will ramp from the Weld Procedure to the Crater Procedure.
2. Start Time - Controls the WFS and Volts for a specified time at the beginning of the weld. During the start time, the machine will ramp from the Start Procedure to the preset Welding Procedure.
3. Post-Flow Time - Adjusts the time that shielding gas flows after the welding output turns off.
4. Current Settings

SYSTEM MENU

FIGURE B.18

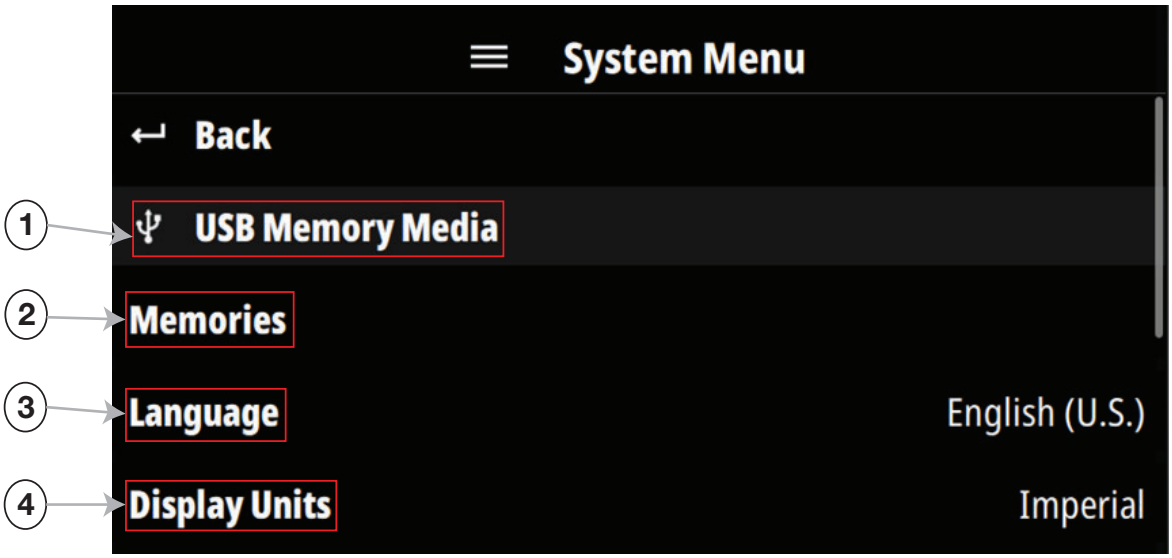

1. USB Memory Media Connected (Blank: No USB Memory Media Connected)
2. Memories - View the saved memories for each process.
3. Language - Language of the text present in the user interface.
4. Display Units - Imperial or Metric.

NOTE: System Menu can only be accessed through the More Options menu.

SYSTEM MENU CONTINUED

FIGURE B.19

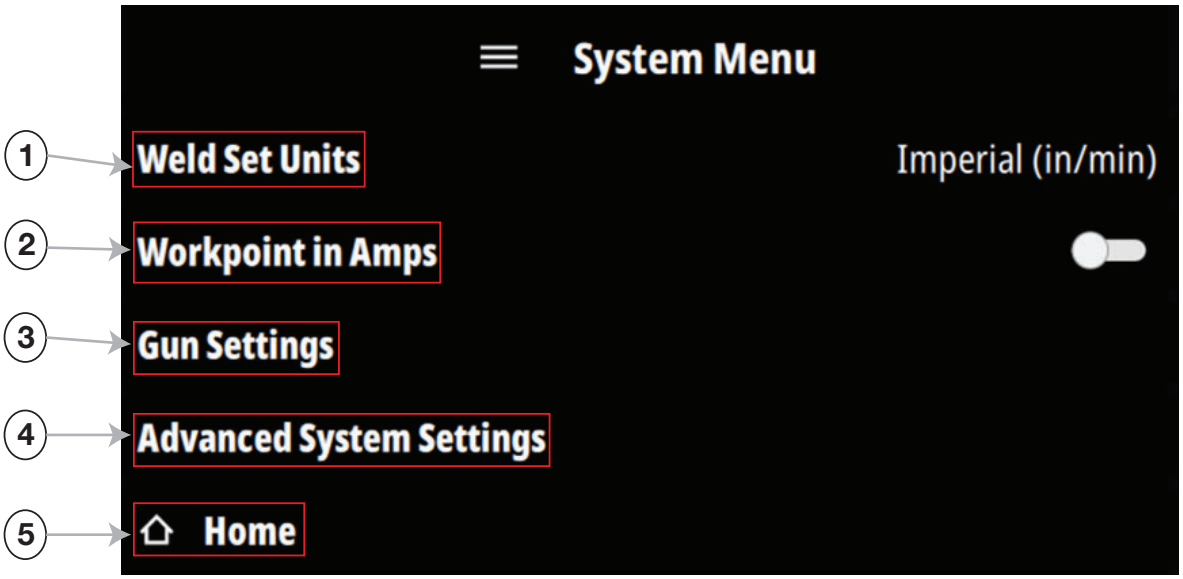

1. Weld Set Units - Selects the units to display wire feed speed, metric or imperial.
2. Work Point in Amps
3. Gun Settings - Trigger Memory Recall, Procedure Change Method, 12-pin GMAW.FCAW Gun.
4. Advanced System Settings
5. Home - Returns to Main Screen.

NOTE: System Menu can only be accessed through the More Options menu.

ADVANCED SYSTEM SETTINGS

FIGURE B.20

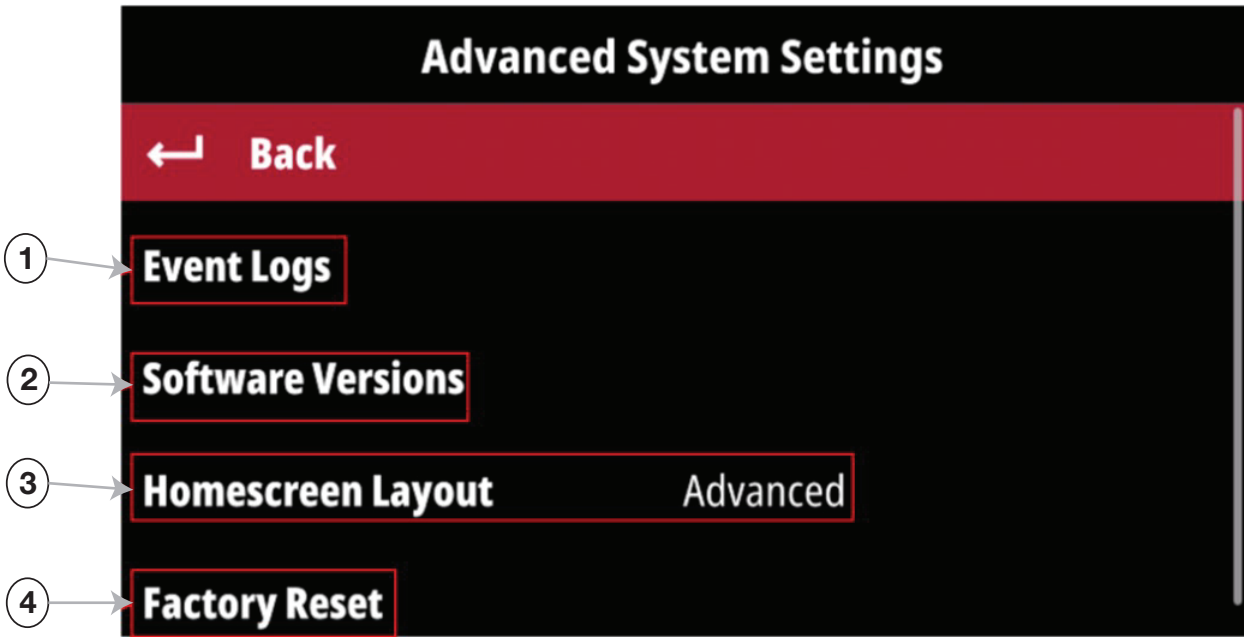

1. Event Logs
2. Software Versions
3. Home Screen Layout - Choose between Advanced and Simplified.
4. Factory Reset

MORE SETTINGS MENU (ALL PROCESSES)

FIGURE B.21

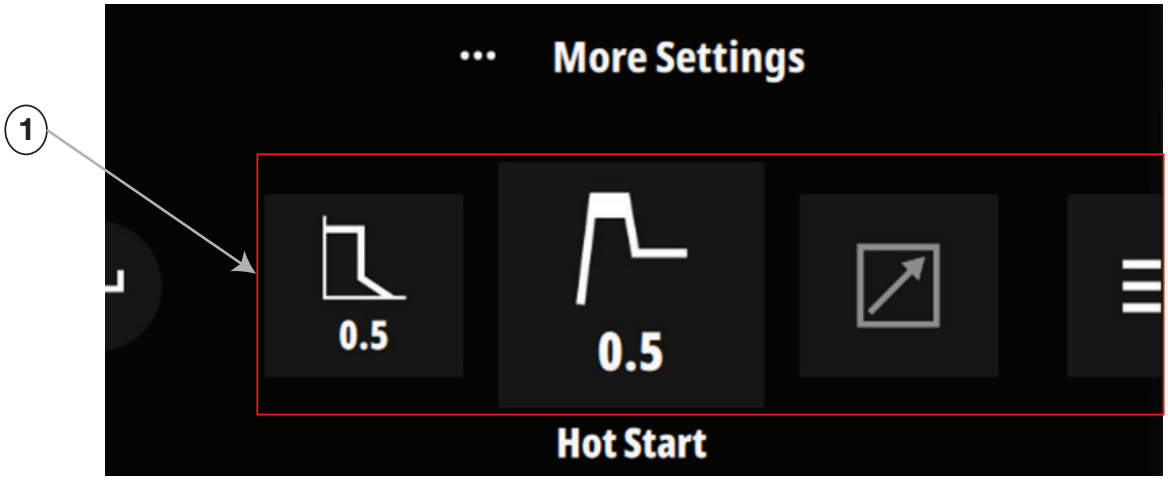

1. Advanced settings will appear here. Each weld process will have different settings. The most common advanced settings are: Pinch, Arc Force, Hot Start, Pre-Flow Time, Post-Flow Time, 2-Step/4-Step Trigger, and Ultimarc

   NOTE: Advanced settings will only be displayed when set to a non-zero value and Home screen Layout is set to advanced.

PREVIOUS SETTING INDICATOR

FIGURE B.22

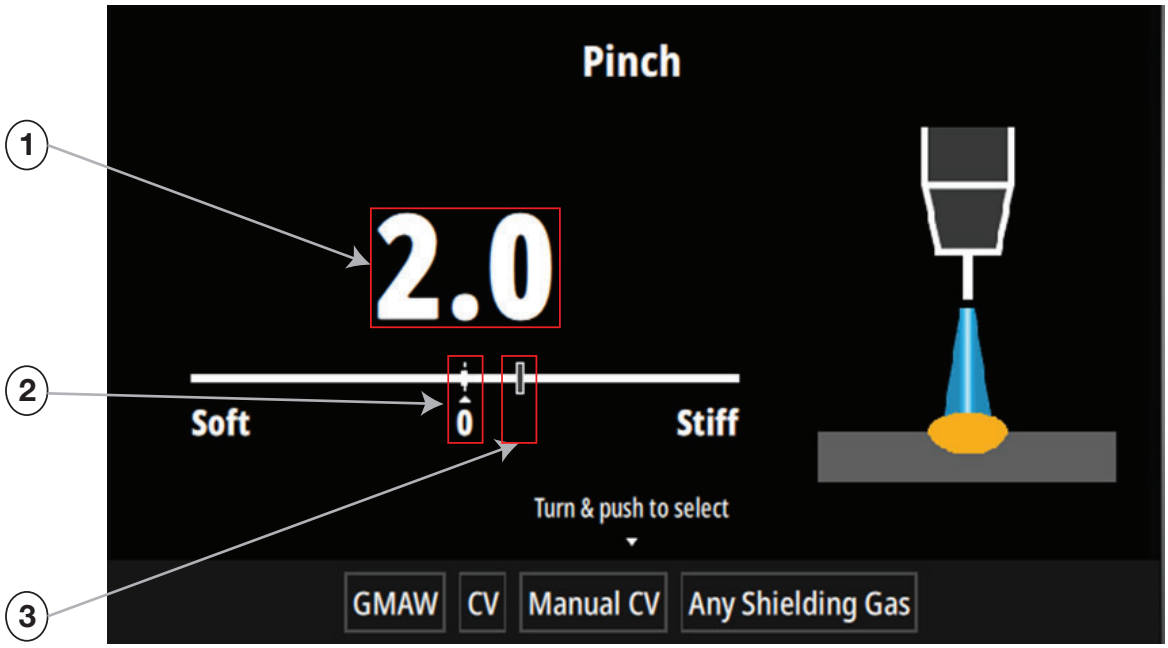

1. Current Setting
2. Previous Setting Indicator - The dotted line will indicate where on the bar the most recent setting was located.
3. Current Setting Indicator - Increasing the value will move the bar to the right, decreasing the value will move the bar to the left.

WELDING SCREEN

FIGURE B.23

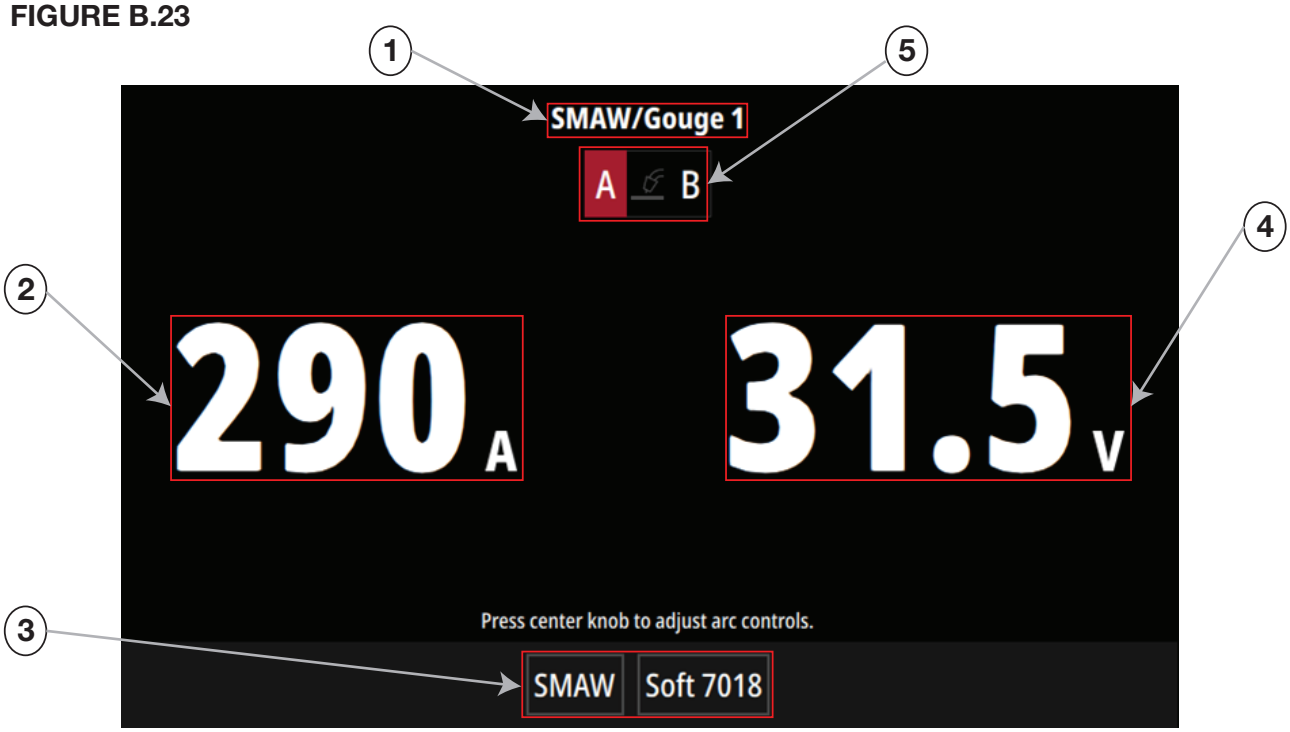

1. Memory Name
2. Actual Current
3. Current Weld Settings
4. Actual Voltage
5. Dual Procedure Indicator - Displays the active welding procedure/schedule. Pressing the active process button switches between the procedure/schedule options.

BACK/HOME BUTTONS

FIGURE B.24

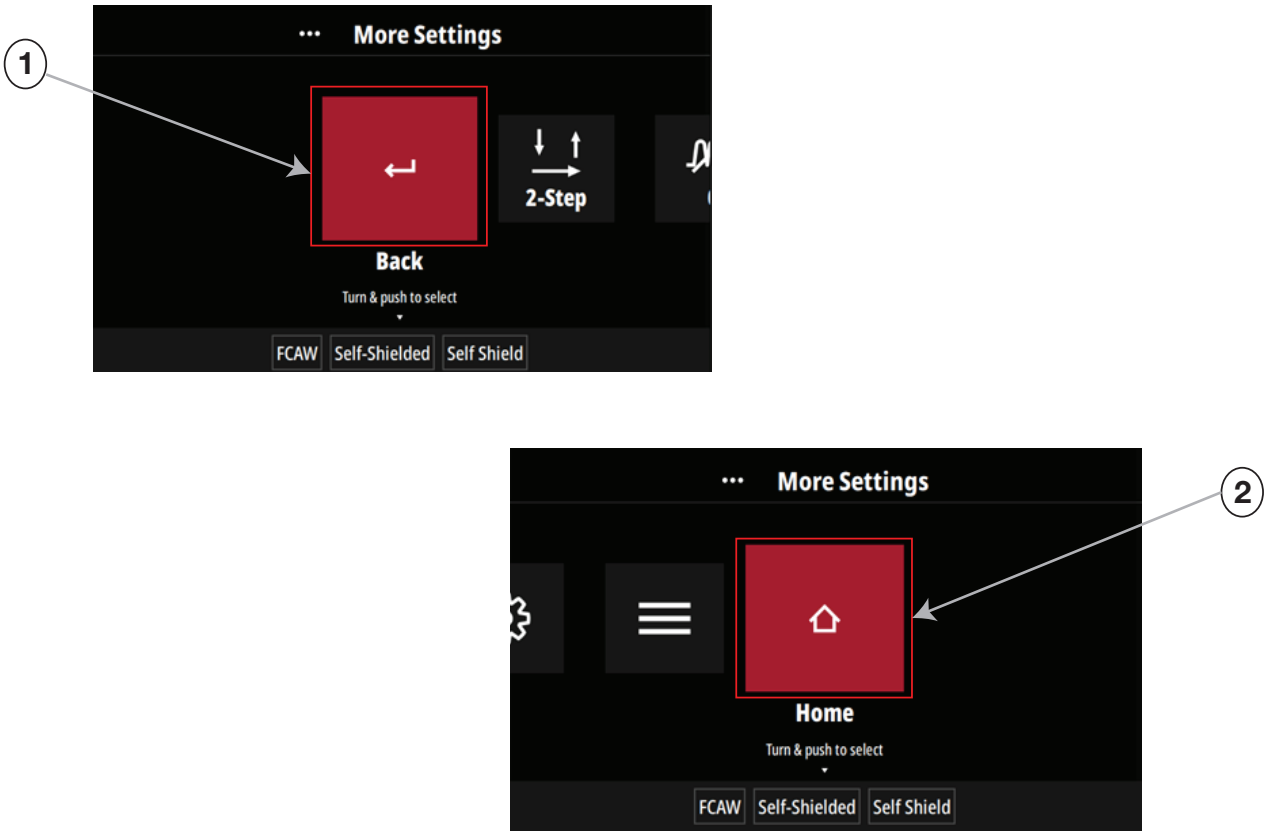

1. Back Button - Selecting the back button takes the system back one screen.
2. Home Button - Selecting the home button takes the system back to the home screen.

MEMORY OPERATION

FIGURE B.25

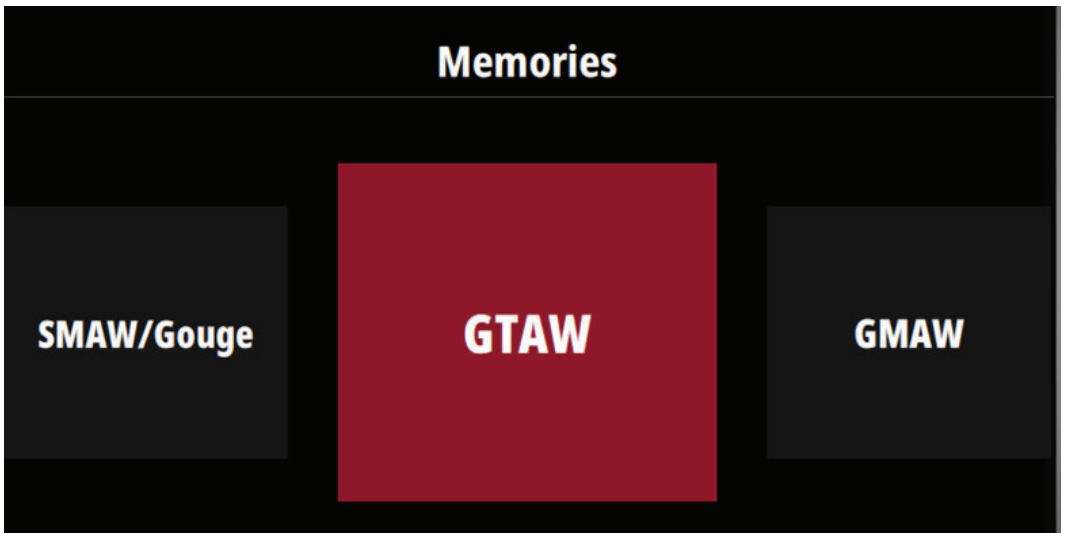

Memories can be saved for each welding process. These can be accessed by touching the applicable memory button labeled one through four.

To save a memory, hold the desired memory location down until the screen indicates the memory is saved.

When one memory is selected the LED will be lit, if any settings are changed the LED will go out. If the memory button is pressed again, the settings will revert to the settings saved in the memory.

Four memories each can be saved in the Stick process, TIG process, MIG, and FCAW Feedhead.

GUN SETTINGS

FIGURE B.26

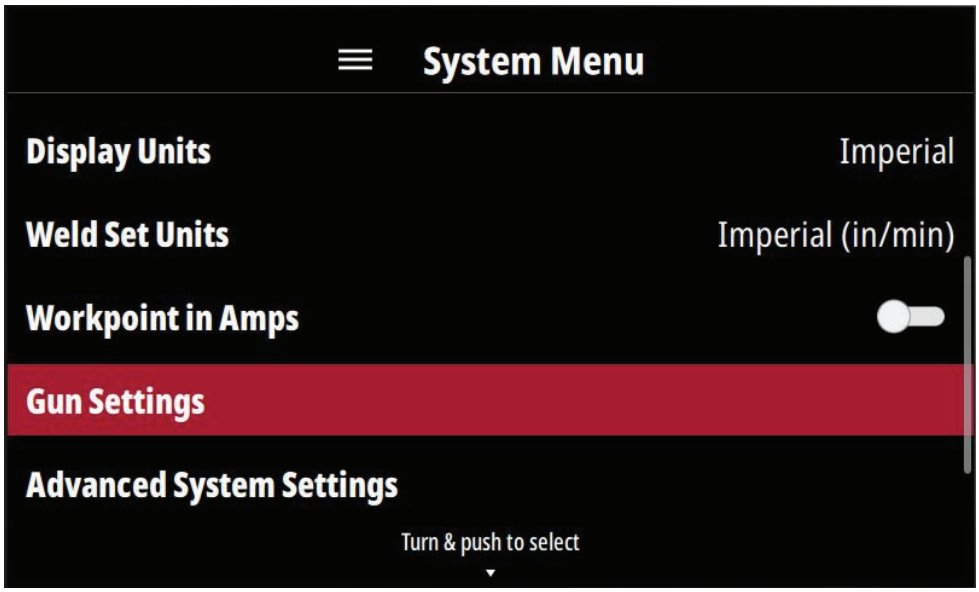

Gun settings is located in the System Menu. This is where Trigger Memory Recall, Procedure Change Method, and Aluminum specific gun settings can be found.

Trigger Memory Recall allows a user to quickly recall any saved memory by pulling the trigger the amount of times that match the tile of where the memory is saved.

PROCEDURE CHANGE METHOD

FIGURE B.27

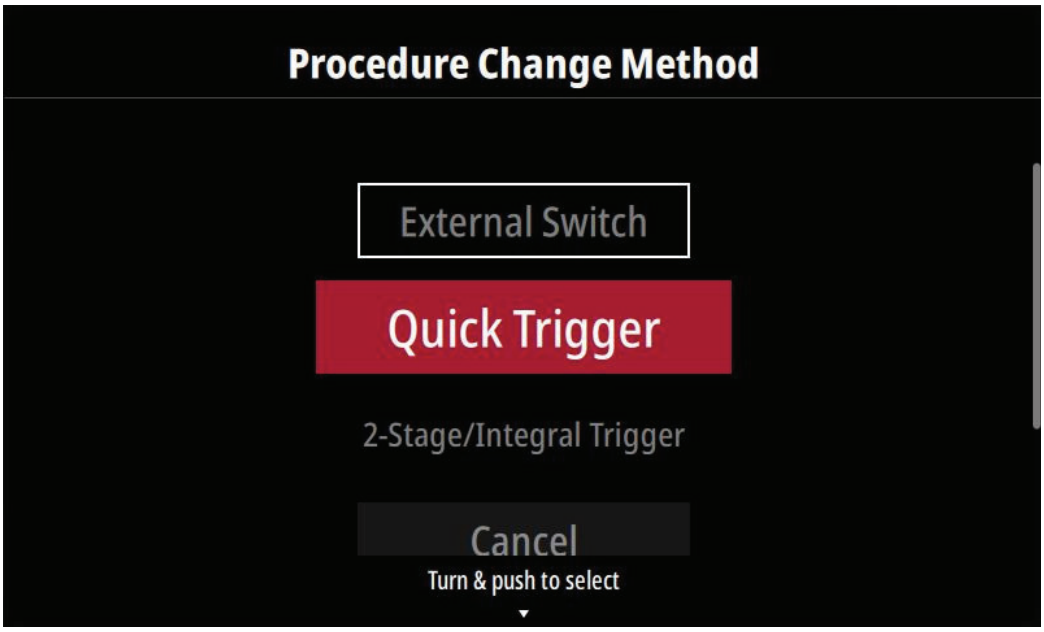

Procedure Change Method enables the user to change procedures while welding by switching between A Settings, B Settings, and Gun Settings. There are four ways to utilize this setting:

1. External Switch selection - Change from A to B procedures with a remote.
2. Quick Trigger - When enabled, you can quickly pull and release the trigger to automatically switch from A to B procedures.
3. 2-Stage/Integral Trigger - Using a dual procedure gun, the user can switch between procedures directly from the gun.
4. From the UI - The user can double click any of the four process buttons to switch between procedures.

Gun Selection

The user has the option to tell the machine if they are using the Magnum Pro Al Standard Push-Pull gun, the Magnum Pro Al Pistol Push-Pull gun, or the Magnum Pro 250LX GT Spool Gun.

12-Pin GMAW/FCAW Gun allows the user to select which type of 12-Pin Magnum PRO Push-Pull or Spool Gun will be in use. When toggled on, the user will be prompted with a Gun Selection menu, Gun Knob Behavior, and Gun Calibration.

Gun Knob Behavior

Gun Knob Behavior is a feature that allows the user to decide where they want to control their WFS settings from.

- When disabled, the user will control the WFS directly from the UI.
- When enabled, the user will control the WFS directly from the gun knob.
- When on Schedule A Only, the gun knob will only control the WFS in Schedule A while Schedule B is set on the UI.

Gun Calibration

After selecting the push-pull or spool gun, the user will need to calibrate their gun with the machine. The push-pull or spool gun will need to be calibrated any time the gun is disconnected and reconnected, OR a new wire size or type is used, or if a new gun is being used.

Before starting the calibration, be sure that the wire is fed through the gun entirely.

GUN CALIBRATION

FIGURE B.28

When Gun Calibration is selected, the user interface will ask the user if they would like to start the calibration. The user will select yes, and the UI will prompt to pull the trigger and wire will begin to cold feed. Once calibration is complete, the wire will stop feeding and the user interface will prompt the user that the calibration was complete and to release the trigger. NOTE: Be sure to hold the trigger during the entire calibration to avoid interrupting the calibration process.

USER INTERFACE PROGRAMMING

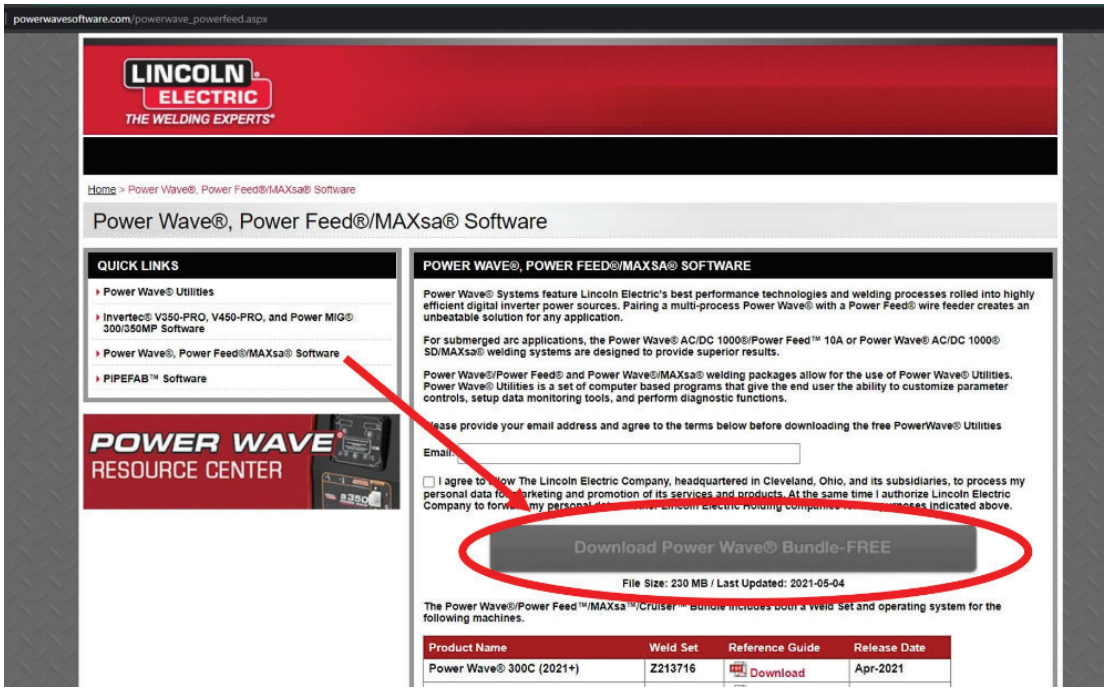

1. Download Power Wave software from www.powerwavesoftware.com
2. Double-click to run the downloaded software through SystemUpdate.
3. Connect to the Power Wave 300C using Ethernet. If required, select "I do not know the IP address of the welder", and click "Refresh List".
4. Once the list of machines shows, highlight 300C to be updated.
5. Click on "Connect"
6. SystemUpdate will then load a list of modules that are available for update. Once this populates, click "Start Update".
7. A screen will pop up, prompting the user to insert a blank USB drive into the computer. Insert the USB now and select Yes to load the user interface software onto the USB drive.
8. Once successfuly loaded onto the USB, the laptop will notify you to insert the USB into the USB slot above the user interface on the machine. DO NOT SELECT OK ON THE LAPTOP.
9. Using the center knob, select Confirm on the user interface. The interface will go through a series of progress screens.
10. Once it is successfully updated, the power source will reboot. When it comes back up, a Warning screen will show. Select Cancel and remove the USB drive from the UI. Go back to the laptop and select OK.
11. After selecting OK, the laptop will run the rest of the updates on the power source via your Ethernet connection. The update status report will show when the software update in the computer has been completed.

WAVE CONTROL

PROCESS	WAVE CONTROL NAME	EFFECT / RANGE	DESCRIPTION
SMAW	ARC FORCE	SOFT (-10.0) TO CRISP (10.0)	ARC FORCE ADJUSTS THE SHORT CIRCUIT CURRENT FOR A SOFT ARC, OR FOR A FORCEFUL, DRIVING ARC. IT HELPS TO PREVENT STICKING AND SHORTING OF ORGANIC COATED ELECTRODES, PARTICULARITY GLOBULAR TRANSFER TYPES SUCH AS STAINLESS AND LOW HYDROGEN. ARC FORCE IS ESPECIALLY EFFECTIVE FOR ROOT PASS ON PIPE WITH STAINLESS ELECTRODE AND HELPS TO MINIMIZE SPATTER FOR CERTAIN ELECTRODES AND PROCEDURE AS WITH LOW HYDROGEN, ETC.
GMAW AND FCAW	PINCH	SOFT (-10.0) TO CRISP (10.0)	PINCH CONTROLS THE ARC CHARACTERISTICS WHEN SHORT-ARC WELDING.
GMAW	ULTIMARC™	SOFT (-10.0) TO STIFF (10.0)	ULTIMARC REGULATES THE FOCUS OR SHAPE OF THE ARC. ULTIMARC VALUES GREATER THAN 0.0 INCREASE THE PULSE FREQUENCY WHILE DECREASING THE BACKGROUND CURRENT, RESULTING IN A TIGHT, STIFF ARC BEST FOR HIGH SPEED SHEET METAL WELDING. ULTIMARC VALUES LESS THAN 0.0 DECREASE THE PULSE FREQUENCY WHILE INCREASING THE BACKGROUND CURRENT, FOR A SOFT ARC GOOD FOR OUT-OF-POSITION WELDING. 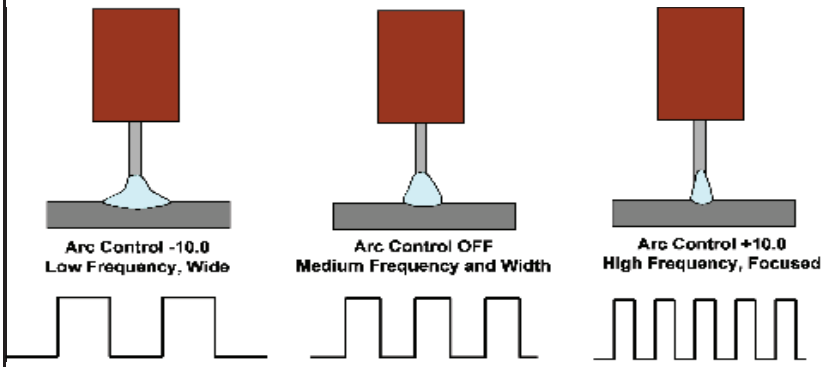
GTAW	1. AC Frequency 2. Pulse Frequency 3. Background 4. AC Balance	…	1. This function controls the frequency of the AC wave in cycles per second. A lower frequency results in a wider bead. A higher frequency results in a more focused bead. 2. Set for bead shape and travel speed: Higher for thinner plate and faster travel. Lower for thicker plate and slower travel. 3. Sets the Background Current as a percentage of Peak Current. 4. AC balance controls the amount of time, as a percentage, that the polarity is electrode negative. A lower AC Balance results in an arc with increased cleaning action. A higher AC Balance results in an arc with higher penetration.

2-Step Trigger

Example 2: 2-Step Trigger: Improved Arc Start and Arc End
Tailoring the arc start and arc end is a common method for reducing spatter and improving weld quality. This can be accomplished with the Start and Burnback functions set to a desired values and Crater set to OFF.

For this sequence,

PREFLOW: Shielding gas begins to flow immediately when the gun trigger is pulled.

RUN-IN: After preflow time expires, the power source regulates to the start output and wire is advanced towards the work piece at the Run-In WFS. If an arc is not established within 2.0 seconds, the power source output and wire feed speed skips to the weld settings.

START: Once the wire touches the work and an arc is established, both the machine output and the wire feed speed ramp to the weld settings throughout the start time. The time period of ramping from the start settings to the weld settings is called UPSLOPE.

WELD: After upslope, the power source output and the wire feed speed continue at the weld settings.

BURNBACK: As soon as the trigger is released, the wire feed speed is turned OFF and the machine output continues for the burnback time.

POSTFLOW: Next, the machine output is turned OFF and shielding gas continues until the post flow timer expires.

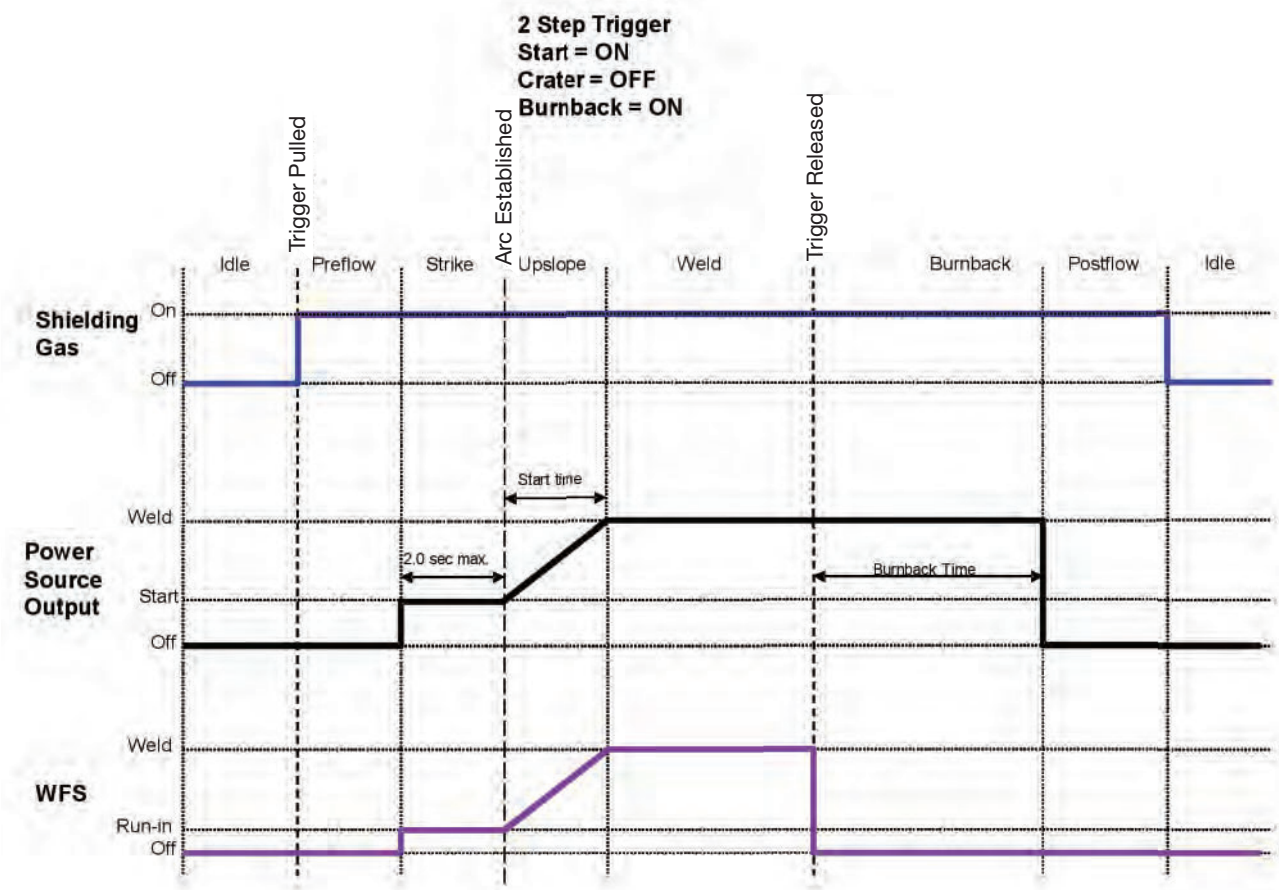

2-Step Trigger

Example 3: 2-Step Trigger: Customized Arc Start, Crater and Arc End
Aluminum is an example of where start, crater and burnback are commonly used to improve welding performance.

For this sequence,

PREFLOW: Shielding gas begins to flow immediately when the gun trigger is pulled.

RUN-IN: After preflow time expires, the power source regulates to the start output and wire is advanced towards the work piece at the Run-In WFS. If an arc is not established within 2.0 seconds, the power source output and wire feed speed skips to the weld settings.

START & UPSLOPE: Once the wire touches the work and an arc is established, both the machine output and the wire feed speed ramp to the weld settings throughout the start time. The time period of ramping from the start settings to the weld settings is called UPSLOPE.

WELD: After upslope, the power source output and the wire feed speed continue at the weld settings.

BURNBACK: After the crater time expires, the wire feed speed is turned OFF and the machine output continues for the burn-back time.

POSTFLOW: Next, the machine output is turned OFF and shielding gas continues until the post flow timer expires.

2-Step trigger: Special considerations

The weld sequence response depends upon when the trigger is pulled and released and whether or not START or CRATER are active.

An example sequence:
Pull the trigger to start feed of wire. When arc is established the sequencer will begin START/UPSLOPE. If trigger is released during UPSLOPE and CRATER/DOWNSLOPE is active, the machine will begin CRATER/DOWNSLOPE and sloping down over the CRATER time, regardless of when the trigger release occurred.

If the CRATER is disabled and the trigger is released during START/UPSLOPE, the sequencer will move to the BURNBACK state to end the weld.

4-Step Trigger

4-step trigger allows the operator to release the trigger once an arc has been established. To end the weld, the trigger is pulled and then released again.

The 4-step trigger also has a current interlock feature. With current interlock, if the arc goes out for more than 0.5 seconds while the trigger is released, the welding process stops and goes to the idle state.

Example 1: 4-Step Trigger: Trigger Interlock

The 4-Step trigger can be configured as a trigger interlock. Trigger interlock adds to the welder's comfort when making long welds by allowing the trigger to be released after an initial trigger pull. Welding stops when the trigger is pulled a second time and then released, or if the arc is interrupted.

For this sequence,

PREFLOW: Shielding gas begins to flow immediately when the gun trigger is pulled.

RUN-IN: After preflow time expires, the power source regulates to the welding output and wire is advanced towards the work piece at the Run-In WFS. If an arc is not established within 1.5 seconds, the wire feed speed will jump to the welding wire feed speed.

WELD: The power source output and the wire feed speed continue at the weld settings. The trigger is released and welding continues. Welding continues when the trigger is pulled a second time

POSTFLOW: As soon as the trigger is released for the second time, the power source output and the wire feed speed are turned OFF. Shielding gas flows until the post flow timer expires.

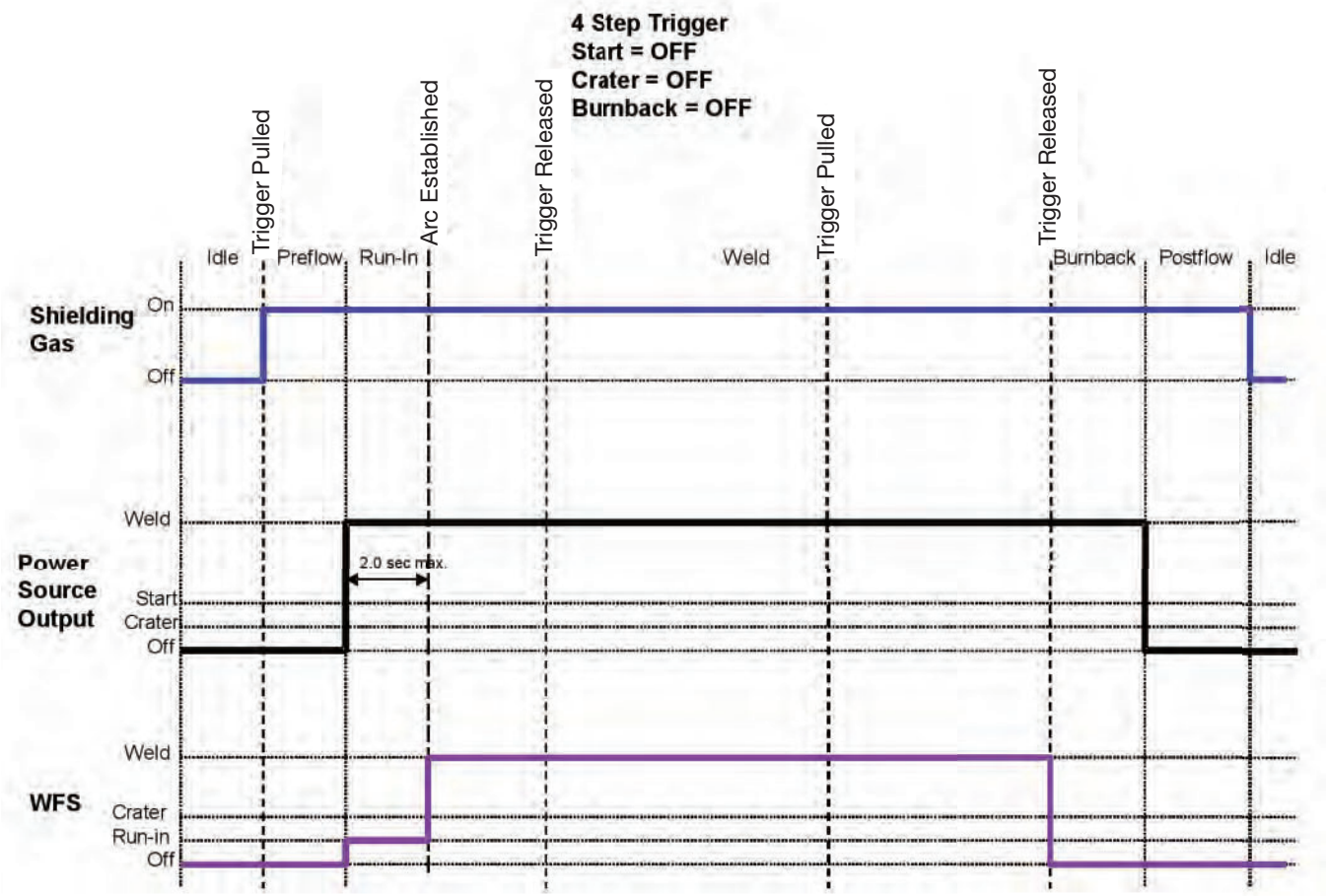

4-Step Trigger

Example 2: 4-Step Trigger: Manual Control of Start and Crater times with Burnback ON.

The 4-Step trigger sequence gives the most flexibility when the Start, Crater and Burnback functions are active. This is a popular choice when welding aluminum because extra heat may be needed during Start and less heat desired during crater. With 4-Step trigger, the welder chooses the amount of time to weld at the Start, Weld and Crater settings by using the gun trigger. Burnback reduces the occurrence of wire to sticking into the weld pool at the end of a weld and conditions the end of the wire for the next arc start.

In this sequence,

PREFLOW: Shielding gas begins to flow immediately when the gun trigger is pulled.

RUN-IN: After preflow time expires, the power source regulates to the start output and wire is advanced towards the work piece at the run-in WFS. If an arc is not established within 2.0 seconds, the power source output and wire feed speed skips to the weld settings.

START: The power source welds at the start WFS and voltage until the trigger is released.

UPSLOPE: During upslope, the power source output and the wire feed speed ramp to the weld settings throughout the start time. The time period of ramping from the start settings to the weld settings is called UPSLOPE. If the trigger is pulled before upslope is complete, WELD is skipped and the sequence jumps to DOWNSLOPE.

WELD: After upslope, the power source output and the wire feed speed continue at the weld settings.

DOWNSLOPE: As soon as the trigger is pulled, the wire feed speed and power source output ramp to the crater settings throughout the crater time. The time period of ramping from the weld settings to the crater settings is called DOWNSLOPE

CRATER: During CRATER, the power source continues to supply output at the crater WFS and voltage.

BURNBACK: When the trigger is released, the wire feed speed is turned OFF and the machine output continues for the burnback time.

POSTFLOW: Next, the machine output is turned OFF and shielding gas continues until the post flow timer expires.

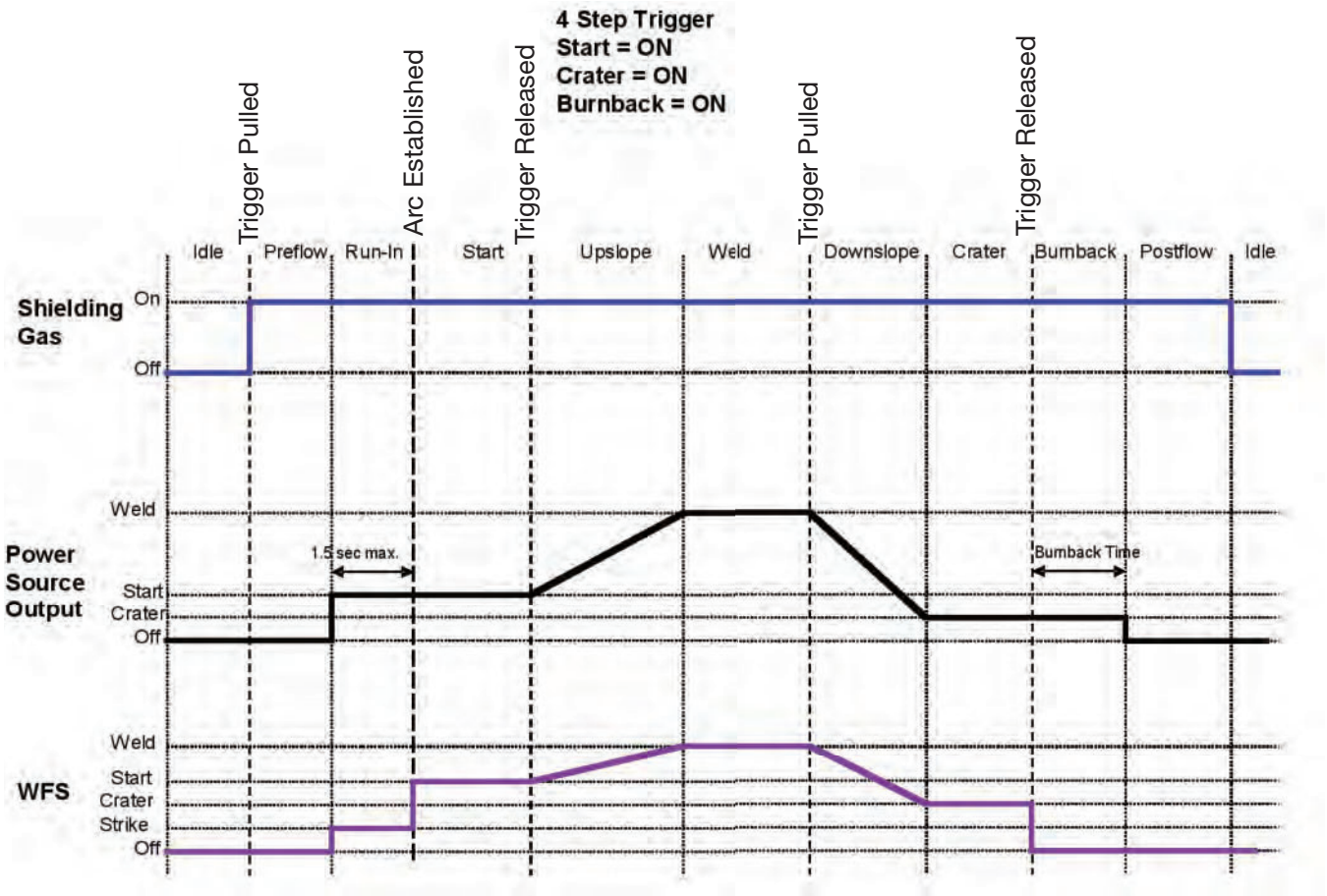

COLD FEED/GAS PURGE SWITCH

Cold Feed and Gas Purge are combined into a single spring centered toggle switch.

To activate Cold Feeding, hold the switch in the **COLD FEED** position. The wire drive will feed electrode but neither the power source nor the gas solenoid will be energized. Adjust the speed of cold feeding by rotating the WFS knob. Cold feeding, or "cold inching" the electrode is useful for threading the electrode through the gun.

Hold with toggle switch in the **GAS PURGE** position to activate Gas Purge and let the shielding gas flow. The gas solenoid valve will energize but neither the power source output nor the drive motor will be turned on. The Gas Purge switch is useful for setting the proper flow rate of shielding gas. Flow meters should always be adjusted while the shielding gas is flowing.

OPTIONS / ACCESSORIES

POWER WAVE® 300C DUAL GAS BOTTLE UPGRADE KIT (K4866-1) -

Allows for the use of multiple gas bottles or a combination of a gas bottle and water cooler on the rear of a Power Wave® 300C.

POWER WAVE® 300C WATER COOLER ADAPTER KIT (K4898-1) -

Allows Cool Arc® 40 Water Cooler to be installed in place of a gas bottle on the 300C single or dual bottle rack. Kit Includes: (1) 300C Cool Arc 40 Mounting Assembly and Hardware Kit, (1) Cool Arc 40 CGA to QD Water Hose Extension Kit, and (2) Quick Disconnect Adapters (KP4642-1)

COOL ARC® 40 WATER COOLER (K1813-1) -

Water cooler with quick disconnects for MIG guns and TIG torches.

POWER WAVE® 300C 115V AUXILIARY KIT (K2829-1) -

Adds a duplex 115v outlet to the rear of the machine. Includes harness and PC board.

SCREEN PROTECTOR* ORDER KP4735-1

MAGNUM® PRO WELDING GUNS -

See publications E12.05 and E12.08.

GUN CONNECTOR KIT - POWER WAVE 300C® / Power MIG -

Configures Lincoln Electric Magnum PRO guns to connect to Power Wave® 300C and Power MIG power sources. For use with KP42 & KP44 series liners. Order K466-6.

MAGNUM® PRO DUAL PROCEDURE ADAPTER*

Required to use Magnum® PRO Dual Procedure or Dual Schedule guns with the Power Wave® 300C. Order K3159-1.

FAST-MATE™ ADAPTER*

Allows guns with a Fast-Mate™ style back end to connect into Power Wave® 300C and Power MIG® power sources. Order K489-8.

ARC START SWITCH -

Attaches to TIG torch for convenient finger control. Comes equipped with 12-pin connector. Order K814-2.

REMOTE OUTPUT CONTROL WITH 12-PIN UNIVERSAL CONNECTOR*

Consists of a control box with choice of two cable lengths. Permits remote adjustment of output. Order K857-2 (25 ft 7.6 m) Order K857-3 (100 ft 30.5m)

HAND AMPTROL ROTARY TRACK STYLE, 12-PIN AMPHENOL -

(25 ft) Remote current control for GTAW welding. Order K963-4.

FOOT AMPTROL™ -

Provides 25 ft. (7.6 m) of remote output control for GTAW welding. (12-pin plug connection). Order K870-2.

PTA-17F -

Air Cooled TIG Ready-PAK® Flexible head and Ultra-Flex™ cables provide ultimate comfort and maneuverability. Pre-configured package with K1622-1 Twist-Mate™ adapter, cable cover. Includes: #7 nozzle, 1/16 in. (1.6 mm) and 3/32 in. (2.4 mm) collets, collet bodies and E3® Tungsten Order: K1782-14 (12.5 ft 3.8 m) Order K1782-18 (25 ft, 7.6 m) Additional TIG torch options in E12.150

SPINDLE ADAPTER FOR SMALL SPOOLS*

Permits 8 in. (200 mm) O.D. spools to be mounted on 2 in. (51 mm) O.D. spindles. Order K468.

SPINDLE ADAPTER FOR 14LB COILS*

Permits 14 lb. (6 kg) Innershield® coils to be mounted on 2 in (51mm) O.D. spindles. Order K435.

MAGNUM PRO AL FIXED CONDUIT PUSH-PULL GUN

The Magnum PRO AL Fixed Conduit Push-Pull Guns feature a new rigid liner which provides a smooth, premium aluminum welding solution. The enhanced feeding capabilities will reduce downtime and increase arc on time. Order K4797-2 (Air Cooled) or K4798-2 (Water Cooled)

MAGNUM® PRO 250LX GT SPOOL GUN

With longer-lasting Magnum PRO Expendables and direct connect functionality, the Magnum PRO 250LX GT spool gun results in less downtime and hassle-free setup. Requires 7-pin to 12-pin adapter (K2910-1) Order K3569-2 & K2910-1

SAFETY PRECAUTIONS

⚠ WARNING

ELECTRIC SHOCK can kill.

- **Do not operate with covers removed.**
- **Turn off power source before installing or servicing.**
- **Do not touch electrically hot parts.**

- **Turn the input power to the welding power source off at the fuse box before working in the terminal strip.**
- **Only qualified personnel should install, use or service this equipment.**

ROUTINE MAINTENANCE

Routine maintenance consists of periodically blowing out the machine, using a low-pressure air stream, to remove accumulated dust and dirt from the intake and outlet louvers, and the cooling channels in the machine.

PERIODIC MAINTENANCE

Calibration of the Power Wave® 300 is critical to its operation. Generally speaking the calibration will not need adjustment. However, neglected or improperly calibrated machines may not yield satisfactory weld performance. To ensure optimal performance, the calibration of output Voltage and Current should be checked yearly.

CALIBRATION SPECIFICATION

Output Voltage and Current are calibrated at the factory. Generally the machine calibration will not need adjustment. However, if the weld performance changes, or the yearly calibration check reveals a problem, use the calibration section of the **Diagnostics Utility** to make the appropriate adjustments.

The calibration procedure itself requires the use of a grid, and certified meters for voltage and current. The accuracy of the calibration will be directly affected by the accuracy of the measuring equipment you use. The **Diagnostics Utility** includes detailed instructions, and is available on the **Service Navigator CD** or at **www.powerwavesoftware.com**.

SYSTEM SNAPSHOT

If experiencing issues with welding performance or system performance, a System Snapshot of the machine can be sent to PowerWaveSupport@LincolnElectric.com for evaluation.

How to take a System Snapshot:

1. Insert a blank USB drive into the USB port above the user interface.
2. Once the blank USB is inserted, navigate to the ... More menu

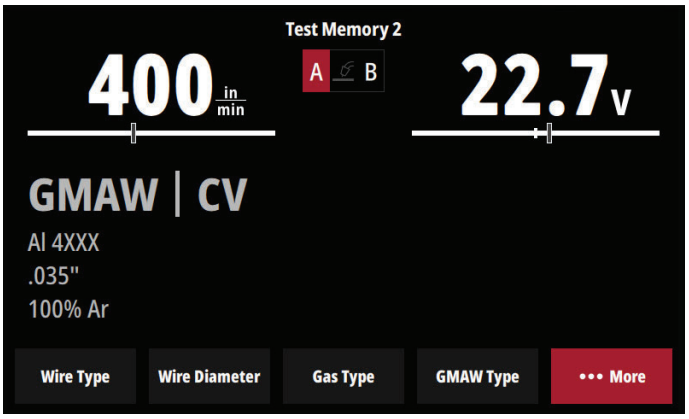

3. Scroll to the right to System Menu and select.

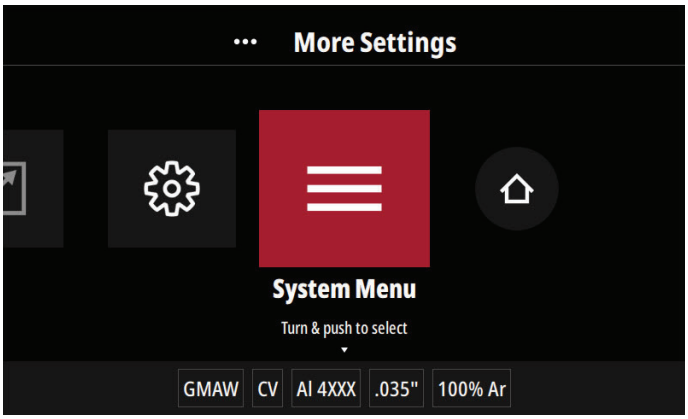

4. Once in the System Menu, scroll down to Advanced System Settings.

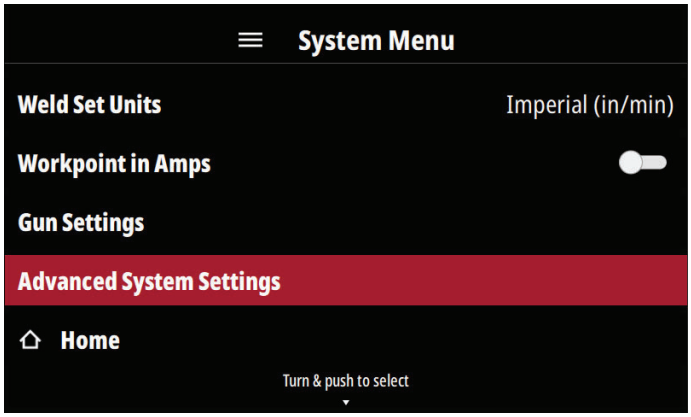

5. Once selected, Software Versions will be the first option. Select Software Versions.

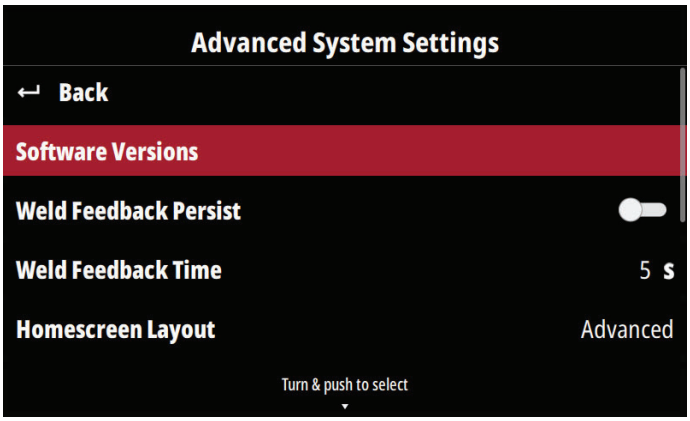

6. Next you will save your snapshot by selecting Save System Snapshot. The screen will then show a progress bar of the snapshot status.

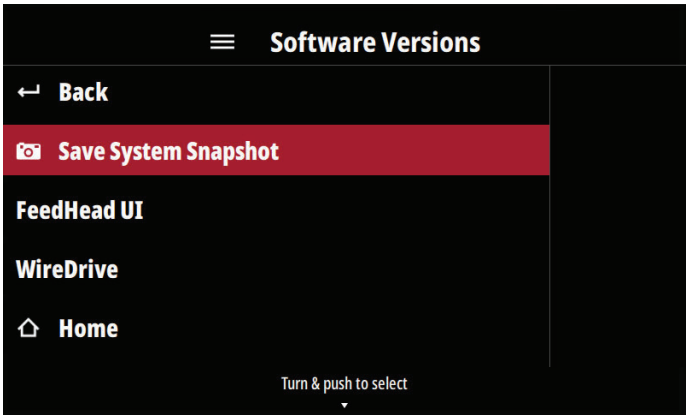

7. Once the snapshot is saved to the USB drive, remove the drive from the user interface and insert it into a computer.
8. Email the snapshot file to PowerWaveSupport@LincolnElectric.com for evaluation and service support.

HOW TO USE TROUBLESHOOTING GUIDE

⚠ WARNING

Service and Repair should only be performed by Lincoln Electric Factory Trained Personnel. Unauthorized repairs performed on this equipment may result in danger to the technician and machine operator and will invalidate your factory warranty. For your safety and to avoid Electrical Shock, please observe all safety notes and precautions detailed throughout this manual.

This Troubleshooting Guide is provided to help you locate and repair possible machine malfunctions. Simply follow the three-step procedure listed below.

Step 1. LOCATE PROBLEM (SYMPTOM).
Look under the column labeled "PROBLEM (SYMP - TOMS)". This column describes possible symptom s that the machine may exhibit. Find the listing tha t best describes the symptom that the machine is exhibiting.

Step 2. POSSIBLE CAUSE.
The second column labeled "POSSIBLE CAUSE" lists the obvious external possibilities that may contribut e to the machine symptom.

Step 3. RECOMMENDED COURSE OF ACTION
This column provides a course of action for the Possible Cause, generally it states to contact your local Lincoln Authorized Field Service Facility.

If you do not understand or are unable to perform the Recommended Course of Action safely, contact your local Lincoln Authorized Field Service Facility.

⚠ WARNING

ELECTRIC SHOCK can kill.

- **Turn the input power OFF at the welding power source before installation or changing drive rolls and/or guides.**
- **Do not touch electrically live parts.**
- **When inching with the gun trigger, electrode and drive mechanism are "hot" to work and ground and could remain energized several seconds after the gun trigger is released.**
- **Welding power source must be connected to system ground per the National Electrical Code or any applicable local codes.**
- **Only qualified personnel should perform maintenance work.**

Observe all additional Safety Guidelines detailed throughout this manual.

⚠ CAUTION

If for any reason you do not understand the test procedures or are unable to perform the tests/repairs safely, contact your **Local Lincoln Authorized Field Service Facility** for technical troubleshooting assistance before you proceed.

USING THE STATUS LED TO TROUBLESHOOT SYSTEM PROBLEMS

Not all of the **POWER WAVE 300C** errors will be displayed on the user interface. There are three status lights that contain error sequences that may not show up on the user interface. If a problem occurs it is important to note the condition of the status lights. Therefore, prior to cycling power to the system, check the power source status light for error sequences as noted below.

There are two externally mounted status lights located above the wire drive in the wire feeder compartment. One of the status lights is for the main control board (labeled "status", and one for the wire drive module. The third status light is internal and is located on the input control board and can be seen by looking through the left case side louvers.

There is an audible beeper associated with this input control board's status light. So the error codes on the input board can be detected through either the status light or the status beeper. **NOTE**: K4489-1 and K4490-5, -6 do not have an audible beeper.

Included in this section is information about the Status Lights and some basic troubleshooting charts for both machine and weld performance.

The status lights on the main control board and the wire drive module are dual-color LED's. Normal operation for each is steady green. Where as the status light on the input control board is one color. Normal operation is for the status light to be off (and the buzzer to be off).

Error conditions are indicated in the following Table E.1.

TABLE E.1

Light Condition	Meaning	
	Main control board status light and Wiredrive Status Light	**Input control board**
Steady Green	System OK. Power source is operational, and is communicating normally with all healthy peripheral equipment connected to its ArcLink network.	Not applicable.
Blinking Green	Occurs during power up or a system reset, and indicates the POWER WAVE ® 300C is mapping (identifying) each component in the system. Normal for first 1-10 seconds after power is turned on, or if the system configuration is changed during operation.	Not applicable.
Fast Blinking Green	Indicates Auto-mapping has failed	Not applicable.
Alternating Green and Red	Non-recoverable system fault. If the Status lights are flashing any combination of red and green, errors are present. **Read the error code(s) before the machine is turned off.**	Not applicable.
	Error Code interpretation through the Status light is detailed in the Service Manual. Individual code digits are flashed in red with a long pause between digits. If more than one code is present, the codes will be separated by a green light. Only active error conditions will be accessible through the Status Light.	
	Error codes can also be retrieved with the **Diagnostics Utility** (included on the **Service Navigator** CD or available at **www.powerwavesoftware.com**). This is the preferred method, since it can access historical information contained in the error logs.	
	To clear the active error(s), turn power source off, and back on to reset.	
Steady Red	Not applicable.	Not applicable.
Blinking Red	Not applicable.	**Error Code interpretation -** Individual code digits are flashed in red with a long pause between digits. These error codes are three digit codes that all start with a number three.
Status LED off	Not applicable.	System OK

⚠ CAUTION

If for any reason you do not understand the test procedures or are unable to perform the tests/repairs safely, contact your **Local Lincoln Authorized Field Service Facility** for technical troubleshooting assistance before you proceed.

Observe all Safety Guidelines detailed throughout this manual

ERROR CODES FOR THE POWER WAVE®

The following is a partial list of possible error codes for the POWER WAVE 300C. For a complete listing consult the Service Manual for this machine.

MAIN CONTROL BOARD ("STATUS" LIGHT)	
Error Code #	Indication
36 Thermal error	Indicates over temperature. Usually accompanied by Thermal LED. Check fan operation. Be sure process does not exceed duty cycle limit of the machine
54 Secondary (Output) over current error	The long term average secondary (weld) current limit has been exceeded. NOTE: The long term average secondary current limit is 325 amps.
56 Chopper communication error	Indicates communication link between main control board and chopper has errors. If cycling the input power on the machine does not clear the error, contact the Service Department.
58 Primary Fault error	Review error code from input board status light or status beeper. Most likely caused by an over power condition which caused an under voltage on the primary bus. If cycling the input power on the machine does not clear the error, contact the Service Department.
Other	Error codes that contain three or four digits are defined as fatal errors. These codes generally indicate internal errors on the Power Source Control Board. If cycling the input power on the machine does not clear the error, contact the Service Department.
WIRE DRIVE MODULE	
81 Motor Overload	Long term average motor current limit has been exceeded. Typically indicates mechanical overload of system. If problem continues consider higher torque gear ratio (lower speed range).
82 Motor Overcurrent	Absolute maximum motor current level has been exceeded. This is a short term average to protect drive circuitry.

⚠ CAUTION

If for any reason you do not understand the test procedures or are unable to perform the tests/repairs safely, contact your Local Lincoln Authorized Field Service Facility for technical troubleshooting assistance before you proceed.

Observe all Safety Guidelines detailed throughout this manual

INPUT CONTROL BOARD

Error Code #	Indication
331 Peak input current limit	Input current limit has been exceeded. Typically indicates short term power overload. If problem persists contact Service Department.
333 Under-voltage lockout	+15 VDC supply on Input control board too low. Verify input voltage is within the acceptable range. If problem persists contact service department.
336 Thermal Fault	Thermostat on primary module tripped. Typically caused by bottom fan not working.
337 Pre-charge timeout	Problem with start-up sequence. If problem persists contact Service Department.
346 Transformer primary over current	Transformer current too high. Typically indicates short term power overload. If problem persists contact service department.
Other	Contact the Service Department.

⚠ CAUTION

If for any reason you do not understand the test procedures or are unable to perform the tests/repairs safely, contact your Local Lincoln Authorized Field Service Facility for technical troubleshooting assistance before you proceed.

Observe all Safety Guidelines detailed throughout this manual

PROBLEMS (SYMPTOMS)	POSSIBLE CAUSE	RECOMMENDED COURSE OF ACTION
Basic Machine Problems		
Input fuses keep blowing	1. Improperly sized input fuses.	1. Make sure fuses are properly sized. See installation section of this manual for recommende d sizes.
	2. Improper Weld Procedure requiring output levels in excess of machine rating.	2. Reduce output current, duty cycle, or both.
	3. Major physical or electrical damage is evident when the cover s are removed.	3. Contact your local authorized Lincoln Electric Field Service facility for technical assistance.
Machine will not power up (no lights)	1. No Input Power	1. Make sure input supply disconnect has been turned ON. Check input fuses. Make certain that the Power Switch (SW1) on the power source is in the "ON" position.
	2. Input voltage is too low or too high.	2. Make certain that input voltage is correct, according to the Rating Plate located on the rear of the machine.
Machine won't weld, can't get any output.	1. Input voltage is too low or too high.	1. Make certain that input voltage is correct, according to the Rating Plate located on the rear of the machine.
This problem will normally be accompanied by an error code. See "Status Light" section of this document for additional information.	2. Thermal Error.	2. See "Thermal LED is ON" section.
	3. Secondary current limit has been exceeded. (see error 54)	3. Possible short in output circuit. If condition pers ists, contact an authorized Lincoln Electric Field Service facility.
	3a. Input control board fault (see input control board error status).	

⚠ CAUTION

If for any reason you do not understand the test procedures or are unable to perform the tests/repairs safely, contact your Local Lincoln Authorized Field Service Facility for technical troubleshooting assistance before you proceed.

Observe all Safety Guidelines detailed throughout this manual

PROBLEMS (SYMPTOMS)	POSSIBLE CAUSE	RECOMMENDED COURSE OF ACTION
Basic Machine Problems (Continued)		
Thermal LED is ON	1. Improper fan operation.	1. Check for proper fan operation. Fan should run in a low speed setting when the machine is idle and in a high speed when the output is triggered. Check for material blocking intake or exhaust louvers, or for excessive dirt clogging cooling channels in machine.
	2. Open thermostat circuit.	2. Check for broken wires, open connections or faulty thermostats in the thermostat circuit.
"Real Time Clock" no longer functioning.	1. Control PC Board Battery.	1. Replace the battery (Type: BS2032).
Weld and Arc Quality Problems		
General degradation of weld performance.	1. Wire feed problem.	1. Check for feeding problems. Make sure proper gear ratio has been selected.
	2. Cabling problems.	2. Check for bad connections, excessive loops in cable, etc. **NOTE:** The presence of heat in the external welding circuit indicates poor connections or undersized cables.
	3. Loss of, or improper Shielding Gas.	3. Verify gas flow and type are correct.
	4. Verify weld mode is correct for process.	4. Select the correct weld mode for the application.
	5. Machine calibration.	5. The power source may require calibration (current, voltage, WFS).
	6. Wire feed problem.	6. Check for feeding problems. Make sure proper gear ration has been selected.

⚠ CAUTION

If for any reason you do not understand the test procedures or are unable to perform the tests/repairs safely, contact your **Local Lincoln Authorized Field Service Facility** for technical troubleshooting assistance before you proceed.

Observe all Safety Guidelines detailed throughout this manual

PROBLEMS (SYMPTOMS)	POSSIBLE CAUSE	RECOMMENDED COURSE OF ACTION
Weld and Arc Quality Problems (Continued)		
Machine output shuts down during a weld.	1. Secondary current limit has been exceeded, and the machine shuts down to protect itself.	1. Adjust procedure or reduce load to lower current draw from the machine.
	2. System Fault	2. A non-recoverable fault will interrupt welding. This condition will also result in a status light blinking. See the Status Light section for more information.
Machine won't produce full output.	1. Input voltage may be too low, limiting output capability of the power source.	1. Make certain that the input voltage is proper, according to the Rating Plate located on the rear of the machine.
	2. Machine calibration.	2. Calibrate secondary current and voltage.
Excessively long and erratic arc.	1. Wire feed problem.	1. Check for feeding problems. Make sure proper gear ratio has been selected.
	2. Loss of, or improper Shielding Gas.	2. Verify gas flow and type are correct.
	3. Machine calibration.	3. Calibrate secondary current and voltage.
Process switches from GMAW to GTAW when pulling the trigger on a 12-pin gun.	1. 12-Pin GMAW/FCAW Gun setting is not turned on and 12-pin gun is not selected.	1. Go to the ... More menu and navigate to the System Menu. 2. Scroll down to Gun Settings and select. 3. Scroll down to 12-Pin GMAW/FCAW gun, and toggle ON. 4. Scroll down to the Gun Selection menu and select which 12-pin gun you are using. 5. If using a push-pull gun, scroll down to Gun Calibration to auto-calibrate the push-pull gun.

⚠ CAUTION

If for any reason you do not understand the test procedures or are unable to perform the tests/repairs safely, contact your **Local Lincoln Authorized Field Service Facility** for technical troubleshooting assistance before you proceed.

Observe all Safety Guidelines detailed throughout this manual

PROBLEMS (SYMPTOMS)	POSSIBLE CAUSE	RECOMMENDED COURSE OF ACTION
Weld and Arc Quality Problems (Continued)		
Process switches from GTAW to GMAW when pressing the foot amptrol.	1. 12-pin GMAW/FCAW Gun setting is turned on and a 12-pin gun is selected.	1. Go to the ... More menu and navigate to the System Menu. 2. Scroll down to Gun Settings and select. 3. Scroll down to 12-Pin GMAW/FCAW gun, and toggle OFF. 4. Navigate back to the Home Screen and select the GTAW button to weld.

⚠ CAUTION

If for any reason you do not understand the test procedures or are unable to perform the tests/repairs safely, contact your **Local Lincoln Authorized Field Service Facility** for technical troubleshooting assistance before you proceed.

Observe all Safety Guidelines detailed throughout this manual

PROBLEMS (SYMPTOMS)	POSSIBLE CAUSE	RECOMMENDED COURSE OF ACTION
Ethernet		
Cannot Connect	1. Physical connection.	1. Verify that the correct patch cable or cross over cable is being used (refer to local IT department for assistance). 1a. Verify the cables are fully inserted into the bulk head connector. 1b. The LED under the PC board ethernet connector will be lit when the machine is connected to another network device.
	2. IP address information.	2. Use the appropriate PC utility to verify the correct IP address information has been entered. 2a. Verify no duplicate IP addresses exist on the network.
	3. Ethernet Speed	3. Verify that the network device connected to the Power Wave is either a 10-base device or a 10/100-base T device.
Connection Drops while welding	1. Cable Location	1. Verify Network cable is not located next to current carrying conductors. This would include input power cables and welding output cables.

⚠ CAUTION

If for any reason you do not understand the test procedures or are unable to perform the tests/repairs safely, contact your **Local Lincoln Authorized Field Service Facility** for technical troubleshooting assistance before you proceed.

Power Wave 300C Advanced Model Wiring Diagram for code(s) - 12943,12945, 13200, 13406, & 13407 300C ADVANCED

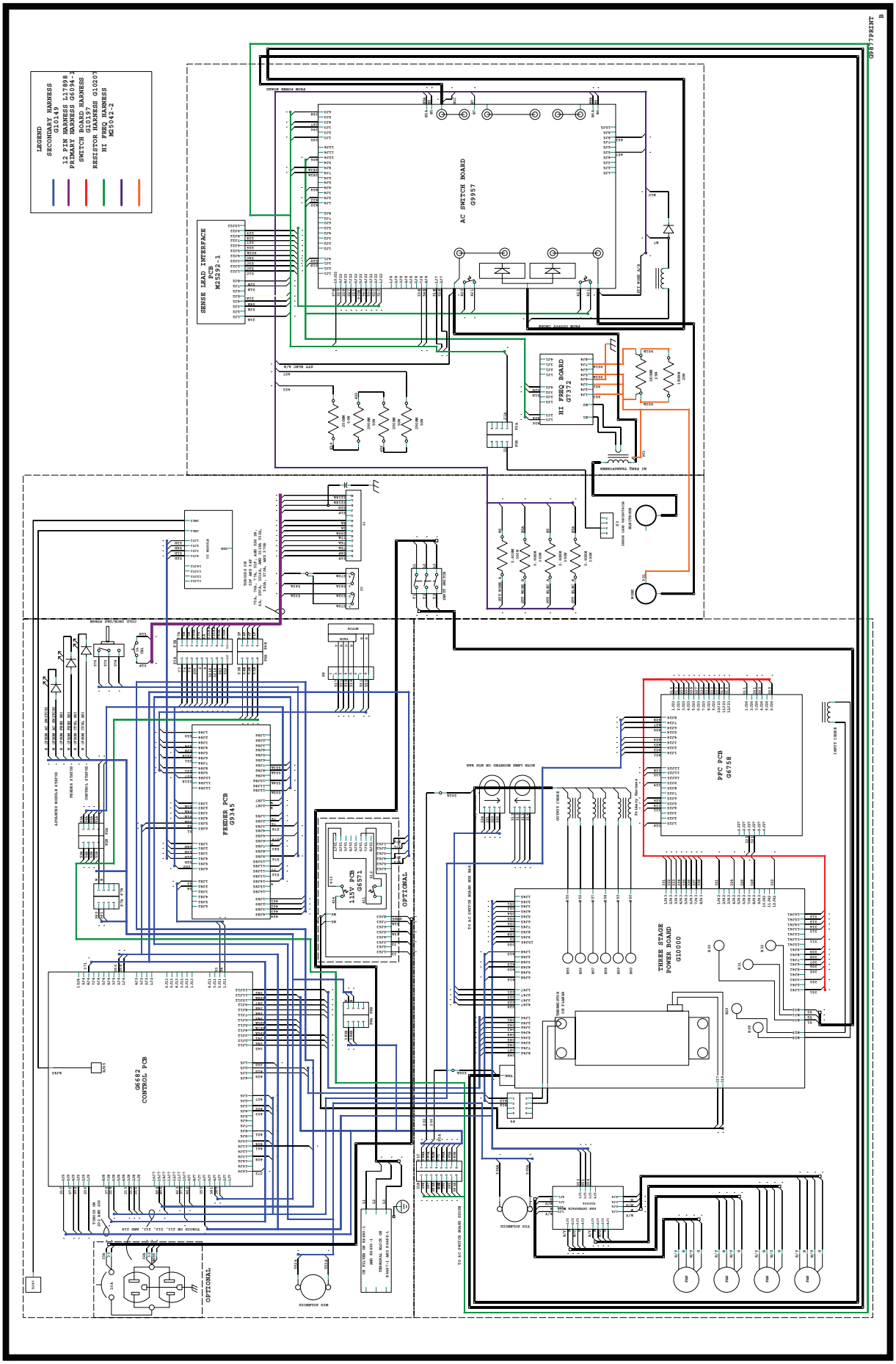
LEGEND
SECONDARY HARNESS G10149
12 PIN HARNESS L17898
PRIMARY HARNESS G6094-2
SWITCH BOARD HARNESS G10197
RESISTOR HARNESS G10207
HI FREQ HARNESS M25592-2
SENSE LEAD INTERFACE PCB M25592-1
AC SWITCH BOARD G9957
HI FREQ BOARD G7372
FEEDER PCB G9345
115V PCB G6571
OPTIONAL
G6682 CONTROL PCB
PFC PCB G6758
THREE STAGE POWER BOARD G10000
INPUT CHOKE
OUTPUT CHOKE
TO AC SWITCH BOARD
TO AC SWITCH BOARD G9957
FAN
MOTOR LEADS MOUNTED ON MOTOR
TSD SOLENOID
MIG SOLENOID
TRANSFORMER
TRANSFORMER
TRANSFORMER

Power Wave 300C Standard Model Wiring Diagram for code(s) - 12942 & 12944

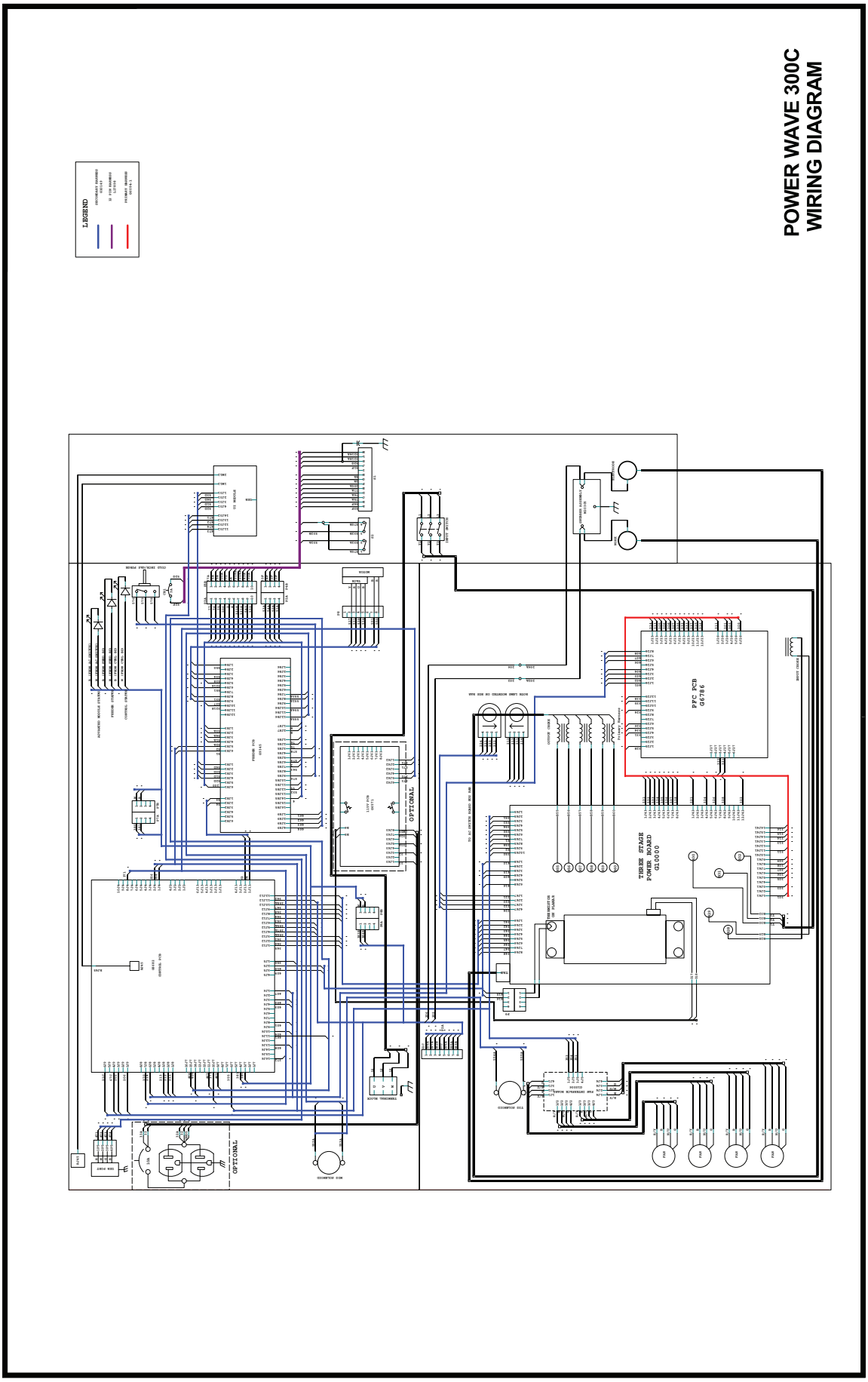

NOTE: This diagram is for reference only. It may not be accurate for all machines covered by this manual. The specific diagram for a particular code is pasted inside the machine on one of the enclosure panels. If the diagram is illegible, write to the Service Department for a replacement. Give the equipment code number.

Power Wave 300C CE Advanced Model Wiring Diagram for code(s) - 13542, 13630

POWER WAVE 300C ADVANCED

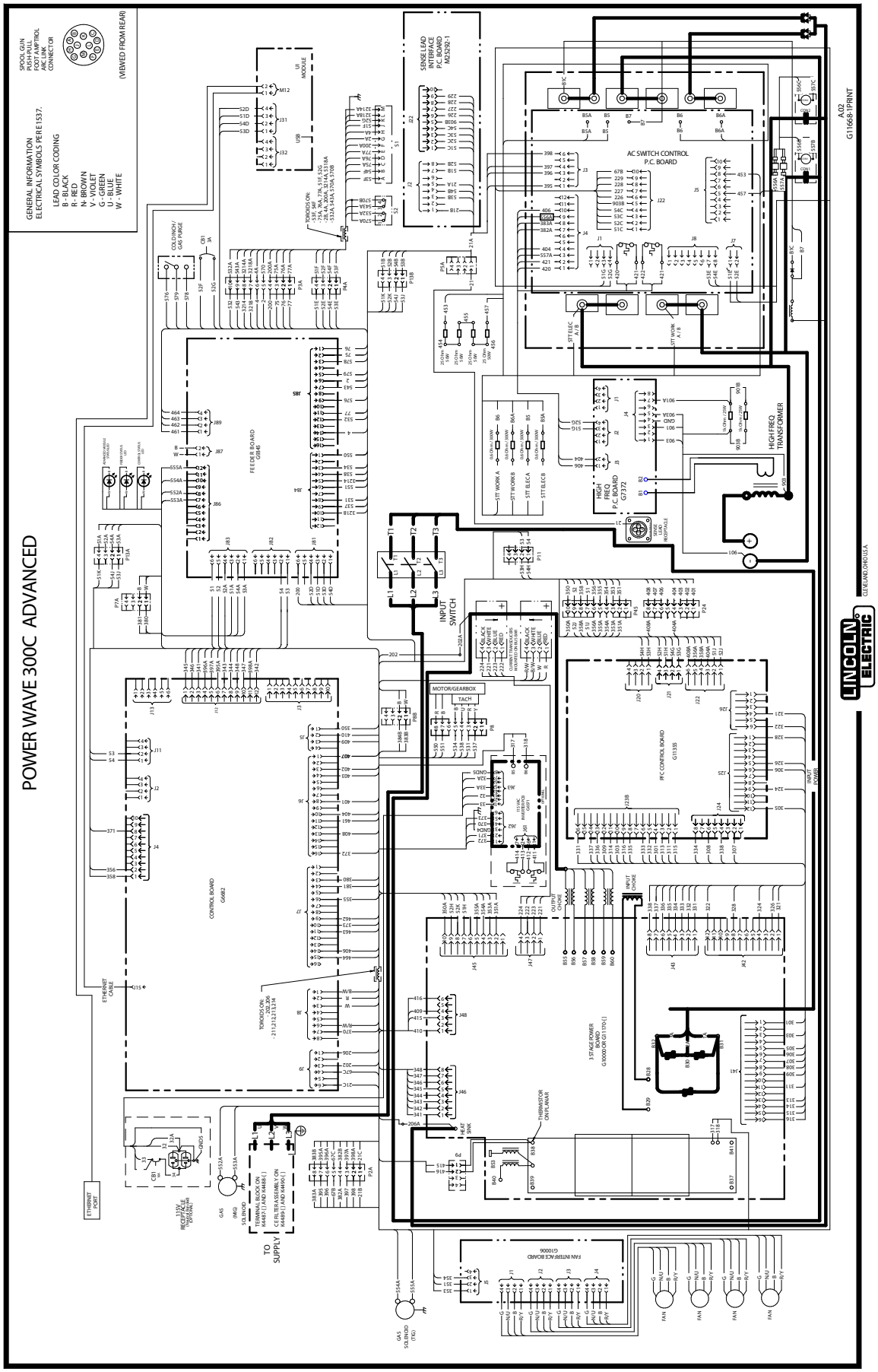

NOTE: This diagram is for reference only. It may not be accurate for all machines covered by this manual. The specific diagram for a particular code is pasted inside the machine on one of the enclosure panels. If the diagram is illegible, write to the Service Department for a replacement. Give the equipment code number.

Power Wave 300C CE Model Wiring Diagram for code(s) - 13541

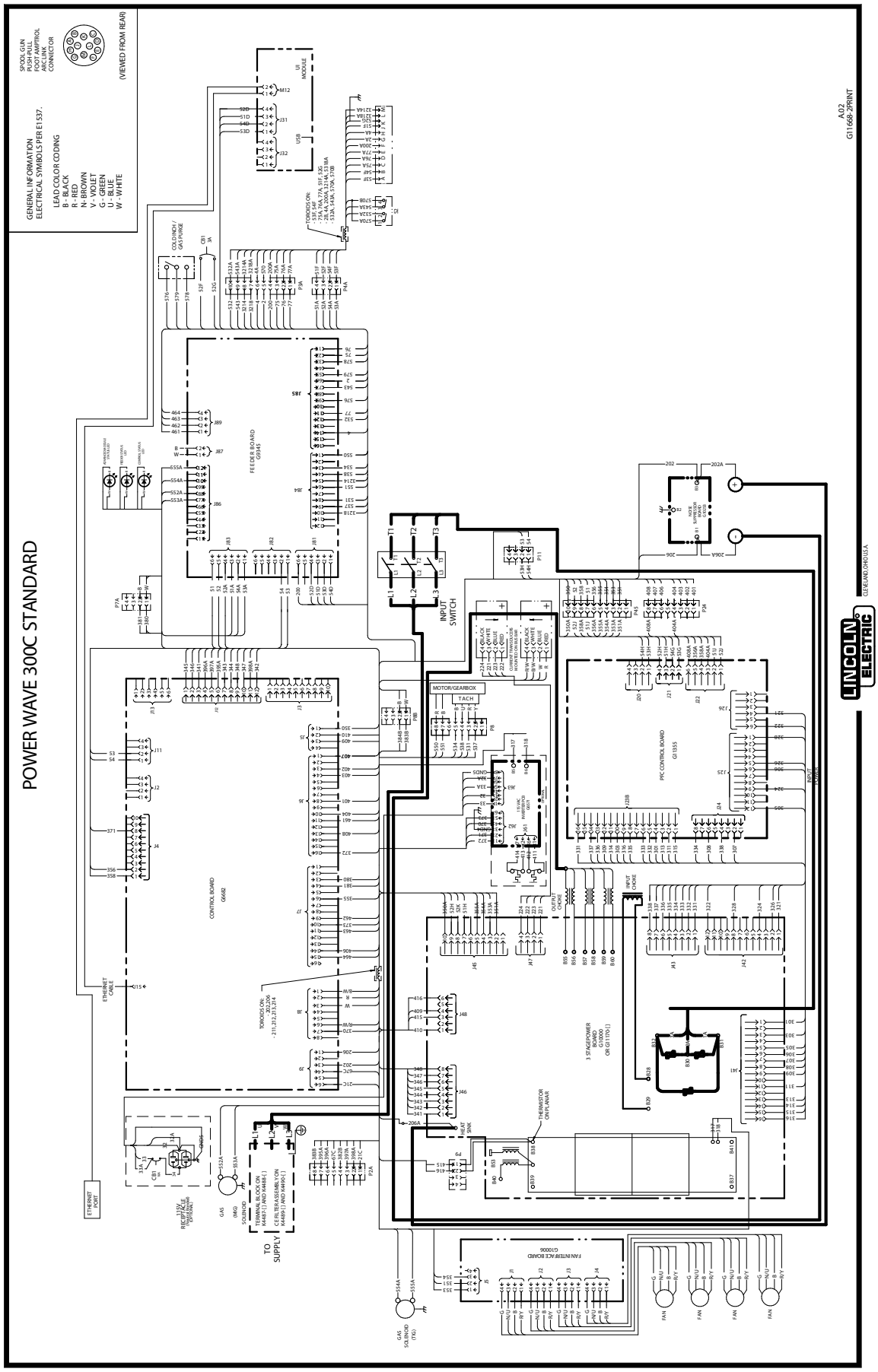

NOTE: This diagram is for reference only. It may not be accurate for all machines covered by this manual. The specific diagram for a particular code is pasted inside the machine on one of the enclosure panels. If the diagram is illegible, write to the Service Department for a replacement. Give the equipment code number.

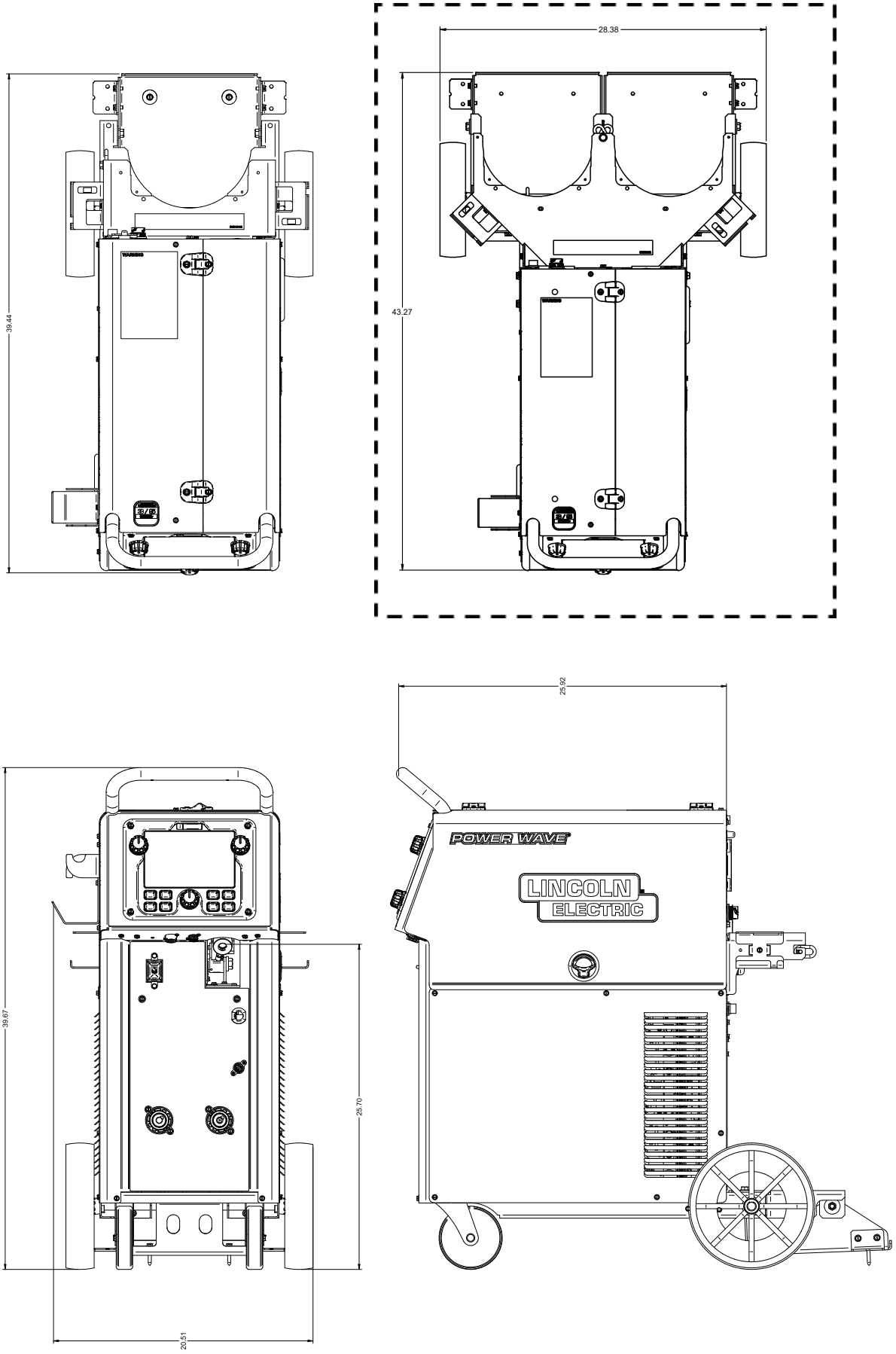
28.38
43.27
39.44
25.92
POWER WAVE
LINCOLN
ELECTRIC
39.67
25.70
20.51

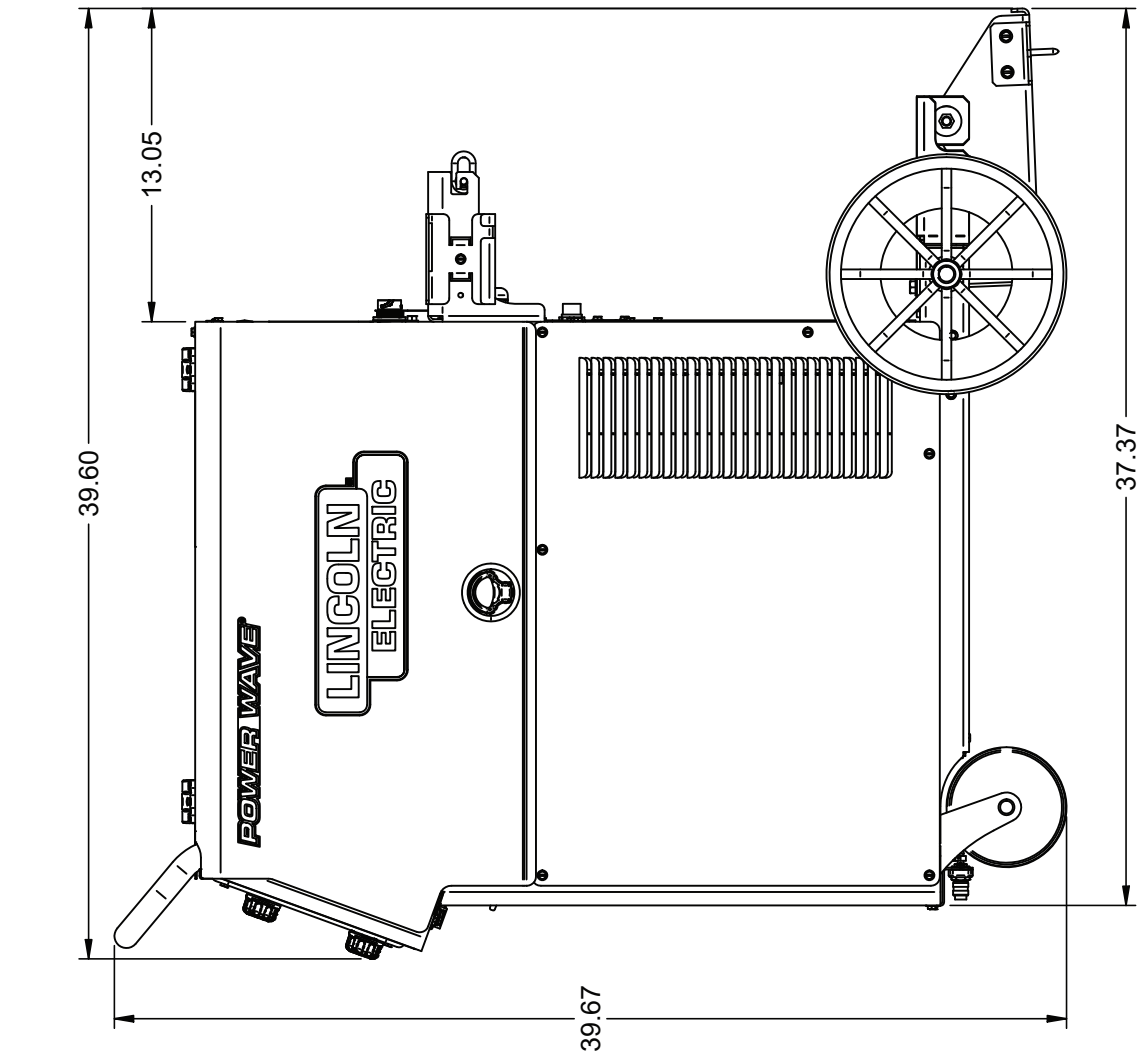
13.05
39.60
LINCOLN
ELECTRIC
POWER WAVE
37.37
39.67

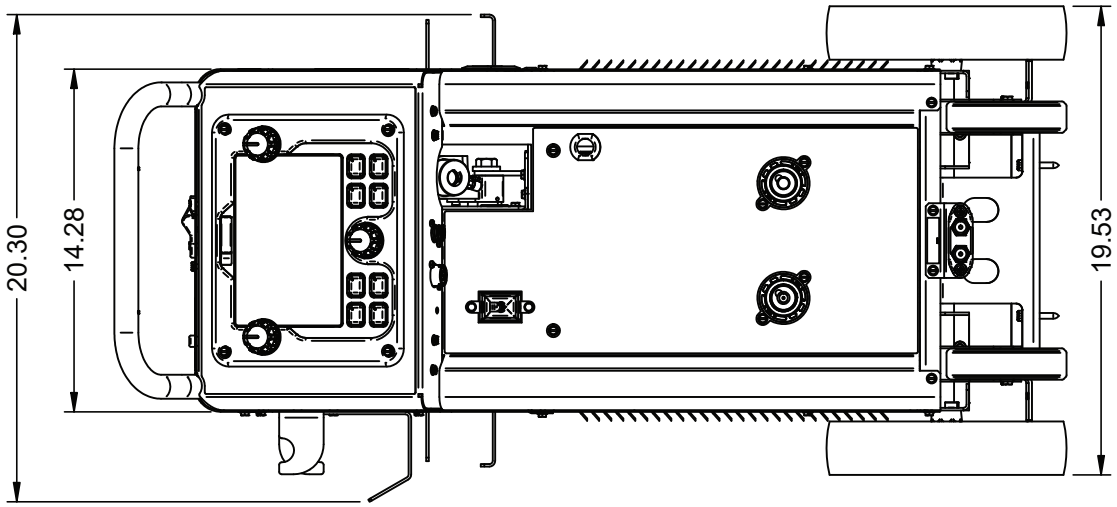
20.30
14.28
19.53

WARNING	● Do not touch electrically live parts or electrode with skin or wet clothing. ● Insulate yourself from work and ground.	● Keep flammable materials away.	● Wear eye, ear and body protection.
Spanish **AVISO DE PRECAUCION**	● No toque las partes o los electrodos bajo carga con la piel o ropa mojada. ● Aislese del trabajo y de la tierra.	● Mantenga el material combustible fuera del área de trabajo.	● Protéjase los ojos, los oídos y el cuerpo.
French **ATTENTION**	● Ne laissez ni la peau ni des vêtements mouillés entrer en contact avec des pièces sous tension. ● Isolez-vous du travail et de la terre.	● Gardez à l'écart de tout matériel inflammable.	● Protégez vos yeux, vos oreilles et votre corps.
German **WARNUNG**	● Berühren Sie keine stromführenden Teile oder Elektroden mit Ihrem Körper oder feuchter Kleidung! ● Isolieren Sie sich von den Elektroden und dem Erdboden!	● Entfernen Sie brennbarres Material!	● Tragen Sie Augen-, Ohren- und Körperschutz!
Portuguese **ATENÇÃO**	● Não toque partes elétricas e electrodos com a pele ou roupa molhada. ● Isole-se da peça e terra.	● Mantenha inflamáveis bem guardados.	● Use proteção para a vista, ouvido e corpo.
Japanese **注意事項**	● 通電中の電気部品、又は溶材にヒフやぬれた布で触れないこと。 ● 施工物やアースから身体が絶縁されている様にして下さい。	● 燃えやすいものの側での溶接作業は絶対にしてはなりません。	● 目、耳及び身体に保護具をして下さい。
Chinese **警 告**	● 皮肤或濕衣物切勿接觸帶電部件及銲條。 ● 使你自己與地面和工件絶緣。	● 把一切易燃物品移離工作場所。	●佩戴眼、耳及身體勞動保護用具。
Korean **위 험**	● 전도체나 용접봉을 젖은 헝겁 또는 피부로 절대 접촉치 마십시요. ● 모재와 접지를 접촉치 마십시요.	●인화성 물질을 접근 시키지 마시요.	●눈, 귀와 몸에 보호장구를 착용하십시요.
Arabic **تحذير**	● لا تلمس الاجزاء التي يسري فيها التيار الكهربائي أو الالكترود بجلد الجسم أو بالملابس المبللة بالماء. ● ضع عازلا على جسمك خلال العمل.	● ضع المواد القابلة للاشتعال في مكان بعيد.	● ضع أدوات وملابس واقية على عينيك وأذنيك وجسمك.

READ AND UNDERSTAND THE MANUFACTURER'S INSTRUCTION FOR THIS EQUIPMENT AND THE CONSUMABLES TO BE USED AND FOLLOW YOUR EMPLOYER'S SAFETY PRACTICES.

SE RECOMIENDA LEER Y ENTENDER LAS INSTRUCCIONES DEL FABRICANTE PARA EL USO DE ESTE EQUIPO Y LOS CONSUMIBLES QUE VA A UTILIZAR, SIGA LAS MEDIDAS DE SEGURIDAD DE SU SUPERVISOR.

LISEZ ET COMPRENEZ LES INSTRUCTIONS DU FABRICANT EN CE QUI REGARDE CET EQUIPMENT ET LES PRODUITS A ETRE EMPLOYES ET SUIVEZ LES PROCEDURES DE SECURITE DE VOTRE EMPLOYEUR.

LESEN SIE UND BEFOLGEN SIE DIE BETRIEBSANLEITUNG DER ANLAGE UND DEN ELEKTRODENEINSATZ DES HERSTELLERS. DIE UNFALLVERHÜTUNGSVORSCHRIFTEN DES ARBEITGEBERS SIND EBENFALLS ZU BEACHTEN.

● Keep your head out of fumes. ● Use ventilation or exhaust to remove fumes from breathing zone.	● Turn power off before servicing.	● Do not operate with panel open or guards off.	**WARNING**
● Los humos fuera de la zona de respiración. ● Mantenga la cabeza fuera de los humos. Utilice ventilación o aspiración para gases.	● Desconectar el cable de alimentación de poder de la máquina antes de iniciar cualquier servicio.	● No operar con panel abierto o guardas quitadas.	Spanish **AVISO DE PRECAUCION**
● Gardez la tête à l'écart des fumées. ● Utilisez un ventilateur ou un aspirateur pour ôter les fumées des zones de travail.	● Débranchez le courant avant l'entretien.	● N'opérez pas avec les panneaux ouverts ou avec les dispositifs de protection enlevés.	French **ATTENTION**
● Vermeiden Sie das Einatmen von Schweibrauch! ● Sorgen Sie für gute Be- und Entlüftung des Arbeitsplatzes!	● Strom vor Wartungsarbeiten abschalten! (Netzstrom völlig öffnen; Maschine anhalten!)	● Anlage nie ohne Schutzgehäuse oder Innenschutzverkleidung in Betrieb setzen!	German **WARNUNG**
● Mantenha seu rosto da fumaça. ● Use ventilação e exhaustão para remover fumo da zona respiratória.	● Não opere com as tampas removidas. ● Desligue a corrente antes de fazer serviço. ● Não toque as partes elétricas nuas.	● Mantenha-se afastado das partes moventes. ● Não opere com os paineis abertos ou guardas removidas.	Portuguese **ATENÇÃO**
● ヒュームから頭を離すようにして下さい。 ● 換気や排煙に十分留意して下さい。	● メンテナンス・サービスに取りかかる際には、まず電源スイッチを必ず切って下さい。	● パネルやカバーを取り外したままで機械操作をしないで下さい。	Japanese **注意事項**
●頭部遠離煙霧。 ●在呼吸區使用通風或排風器除煙。	●維修前切斷電源。	●儀表板打開或沒有安全罩時不準作業。	Chinese **警 告**
● 얼굴로부터 용접가스를 멀리하십시요. ● 호흡지역으로부터 용접가스를 제거하기 위해 가스제거기나 통풍기를 사용하십시요.	● 보수전에 전원을 차단하십시요.	● 판넬이 열린 상태로 작동치 마십시요.	Korean **위 험**
● ابعد رأسك بعيداً عن الدخان. ● استعمل التهوية أو جهاز ضغط الدخان للخارج لكي تبعد الدخان عن المنطقة التي تتنفس فيها.	● اقطع التيار الكهربائي قبل القيام بأية صيانة.	● لا تشغل هذا الجهاز اذا كانت الاغطية الحديدية الواقية ليست عليه.	Arabic **تحذير**

LEIA E COMPREENDA AS INSTRUÇÕES DO FABRICANTE PARA ESTE EQUIPAMENTO E AS PARTES DE USO, E SIGA AS PRÁTICAS DE SEGURANÇA DO EMPREGADOR.

使う機械や溶材のメーカーの指示書をよく読み、まず理解して下さい。そして貴社の安全規定に従って下さい。

請詳細閱讀並理解製造廠提供的説明以及應該使用的銀捍材料，並請遵守貴方的有関勞動保護規定。

이 제품에 동봉된 작업지침서를 숙지하시고 귀사의 작업자 안전수칙을 준수하시기 바랍니다.

اقرأ بتمعن وافهم تعليمات المصنع المنتج لهذه المعدات والمواد قبل استعمالها واتبع تعليمات الوقاية لصاحب العمل.

CUSTOMER ASSISTANCE POLICY

The business of Lincoln Electric is manufacturing and selling high quality welding equipment, automated welding systems, consumables, and cutting equipment. Our challenge is to meet the needs of our customers, who are experts in their fields, and to exceed their expectations. On occasion, purchasers may ask Lincoln Electric for information or technical information about their use of our products. Our employees respond to inquiries to the best of their ability based on information and specifications provided to them by the customers and the knowledge they may have concerning the application. Our employees, however, are not in a position to verify the information provided or to evaluate the engineering requirements for the particular weldment, or to provide engineering advice in relation to a specific situation or application. Accordingly, Lincoln Electric does not warrant or guarantee or assume any liability with respect to such information or communications. Moreover, the provision of such information or technical information does not create, expand, or alter any warranty on our products. Any express or implied warranty that might arise from the information or technical information, including any implied warranty of merchantability or any warranty of fitness for any customers' particular purpose or any other equivalent or similar warranty is specifically disclaimed.

Lincoln Electric is a responsive manufacturer, but the definition of specifications, and the selection and use of specific products sold by Lincoln Electric is solely within the control of, and remains the sole responsibility of the customer. Many variables beyond the control of Lincoln Electric affect the results obtained in applying these types of fabrication methods and service requirements.

WELD FUME CONTROL EQUIPMENT

The operation of welding fume control equipment is affected by various factors including proper use and positioning of the equipment, maintenance of the equipment and the specific welding procedure and application involved. Worker exposure level should be checked upon installation and periodically thereafter to be certain it is within applicable OSHA PEL and ACGIH TLV limits.

THE LINCOLN ELECTRIC COMPANY
22801 St. Clair Avenue • Cleveland, OH • 44117-1199 • U.S.A.
Phone: +1.216.481.8100 • www.lincolnelectric.com