GX 300 MACHINE SCHEMATIC L12211 REV: A

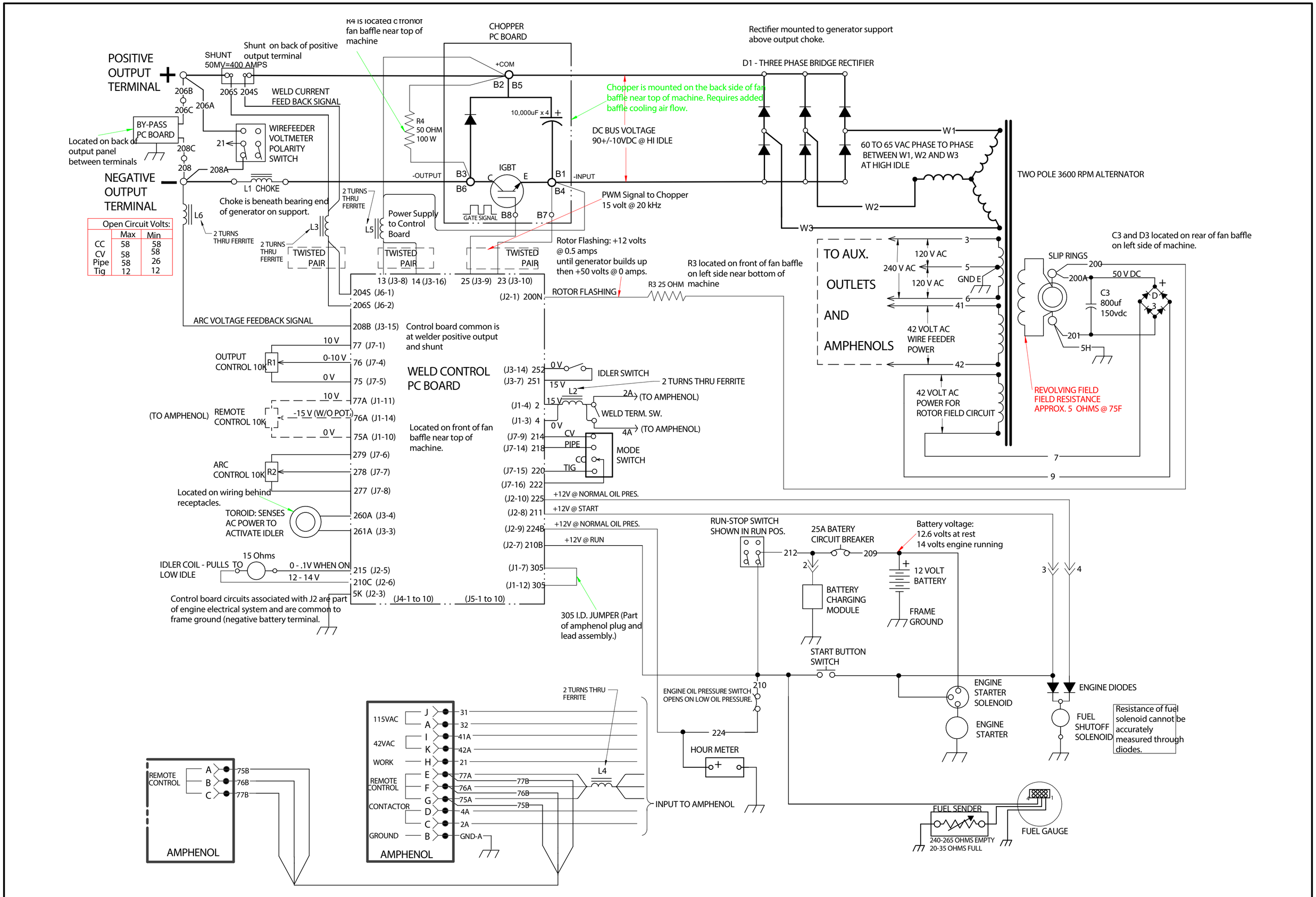
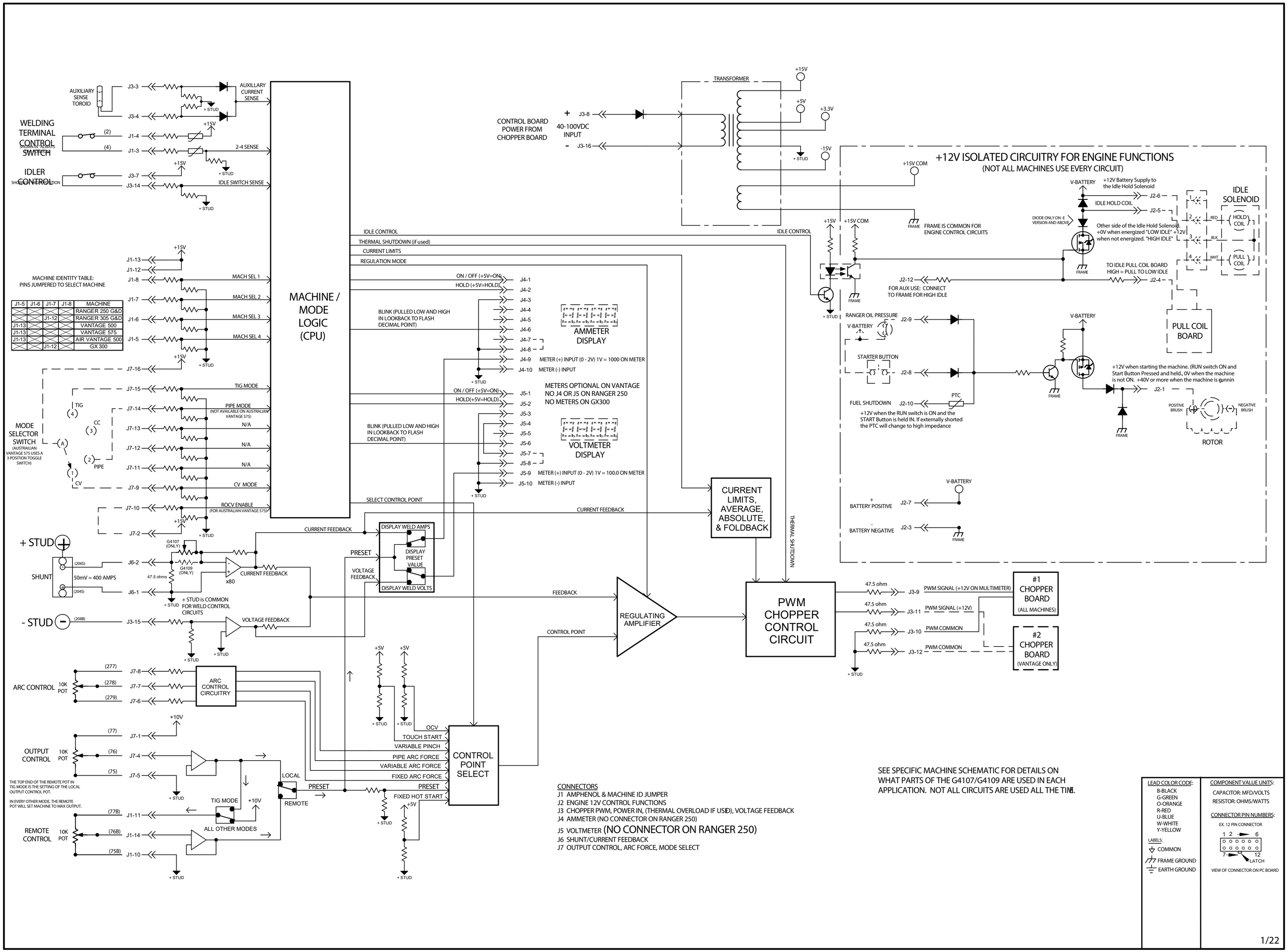
GX 300 MACHINE SCHEMATIC L12211 REV: A PAGE 2