VRTEX MOBILE MACHINE SCHEMATIC L15200-22 REV: A

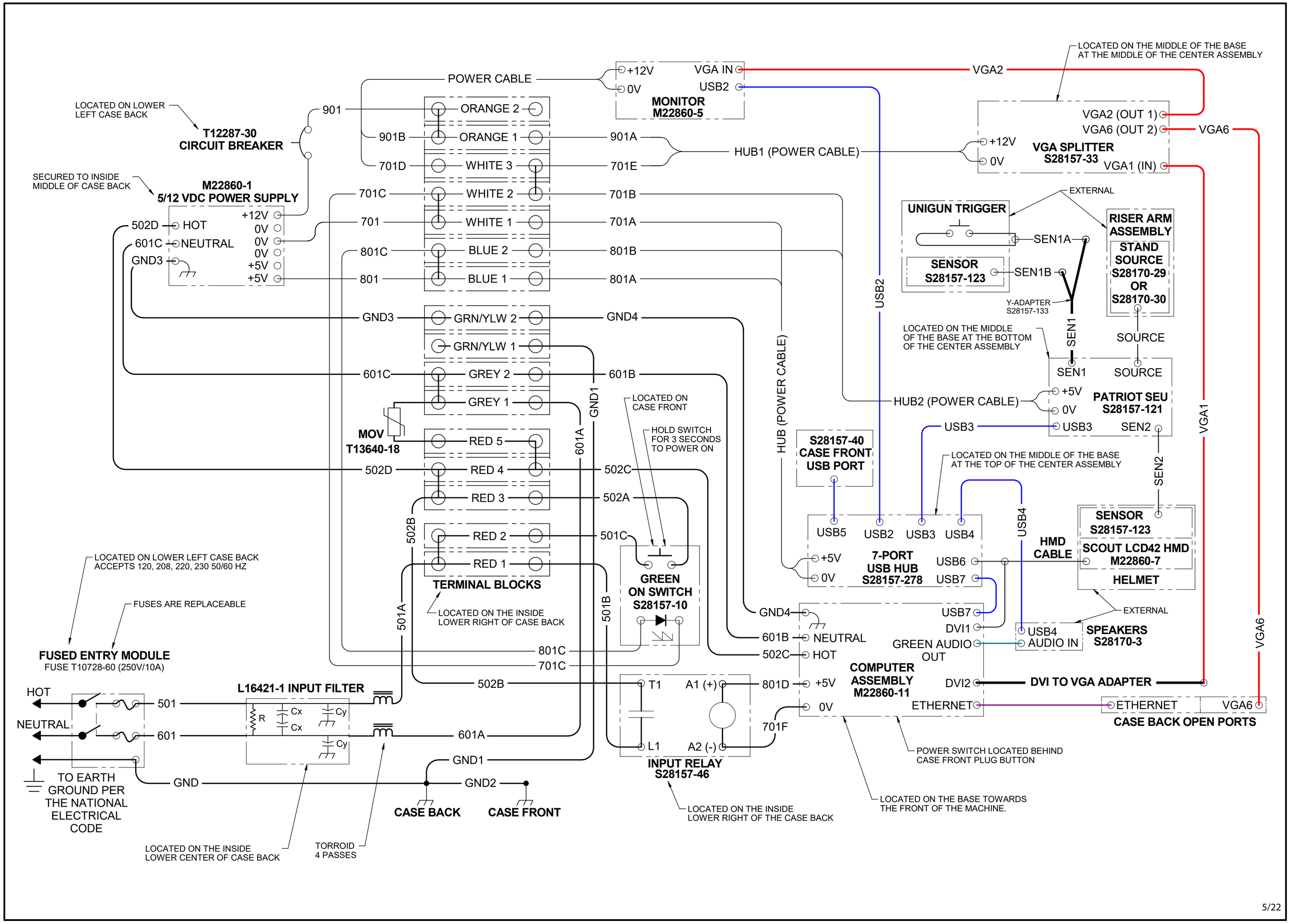

5/22