SPECIAL ALLOYS™

THE NEW DIMENSION IN STRIP CLADDING

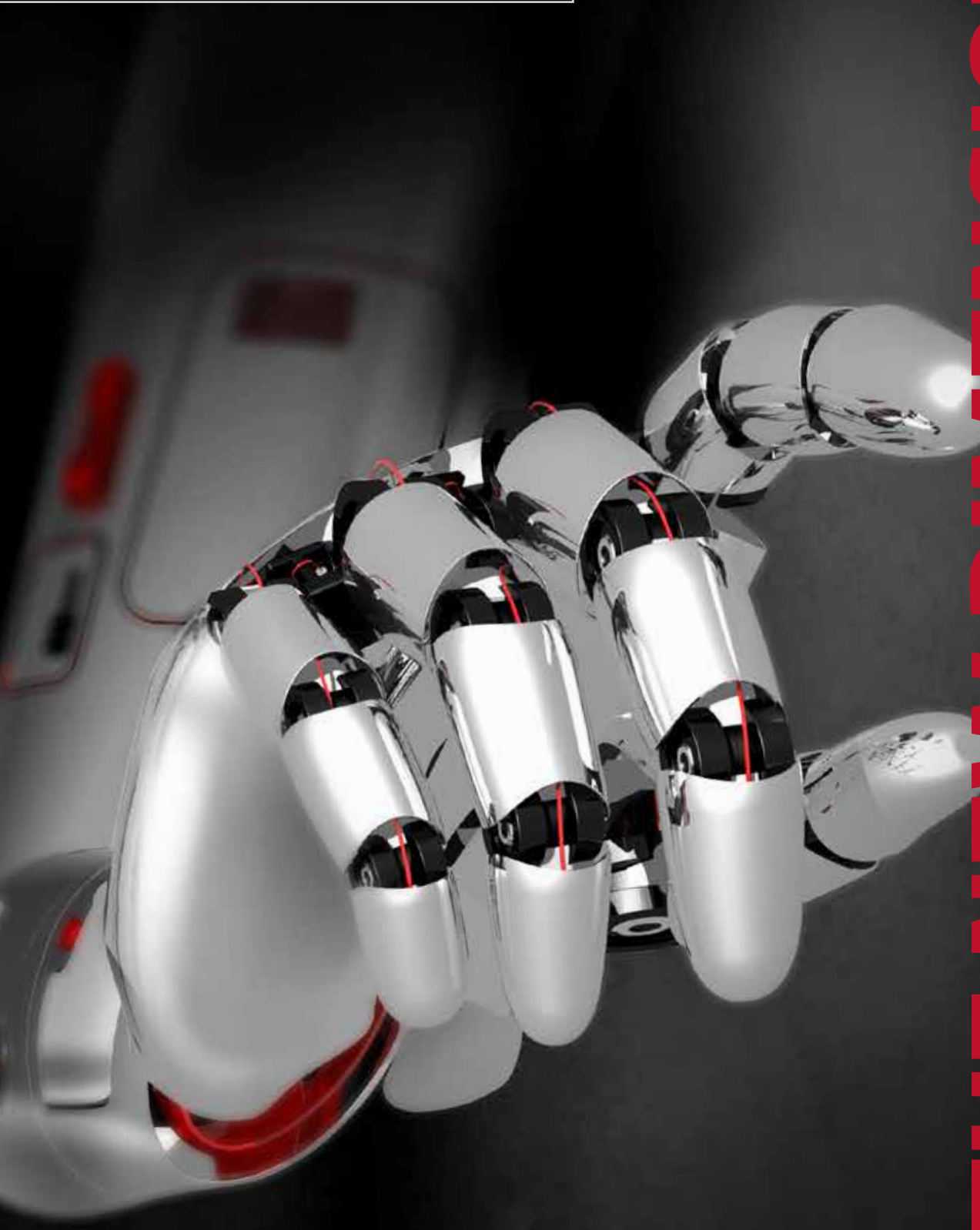

LINCOLN® ELECTRIC

www.lincolnelectriceurope.com

THE COMPLETE SOLUTION FROM A SINGLE SOURCE

SPECIAL ALLOYS™

THE NEW DIMENSION IN STRIP CLADDING

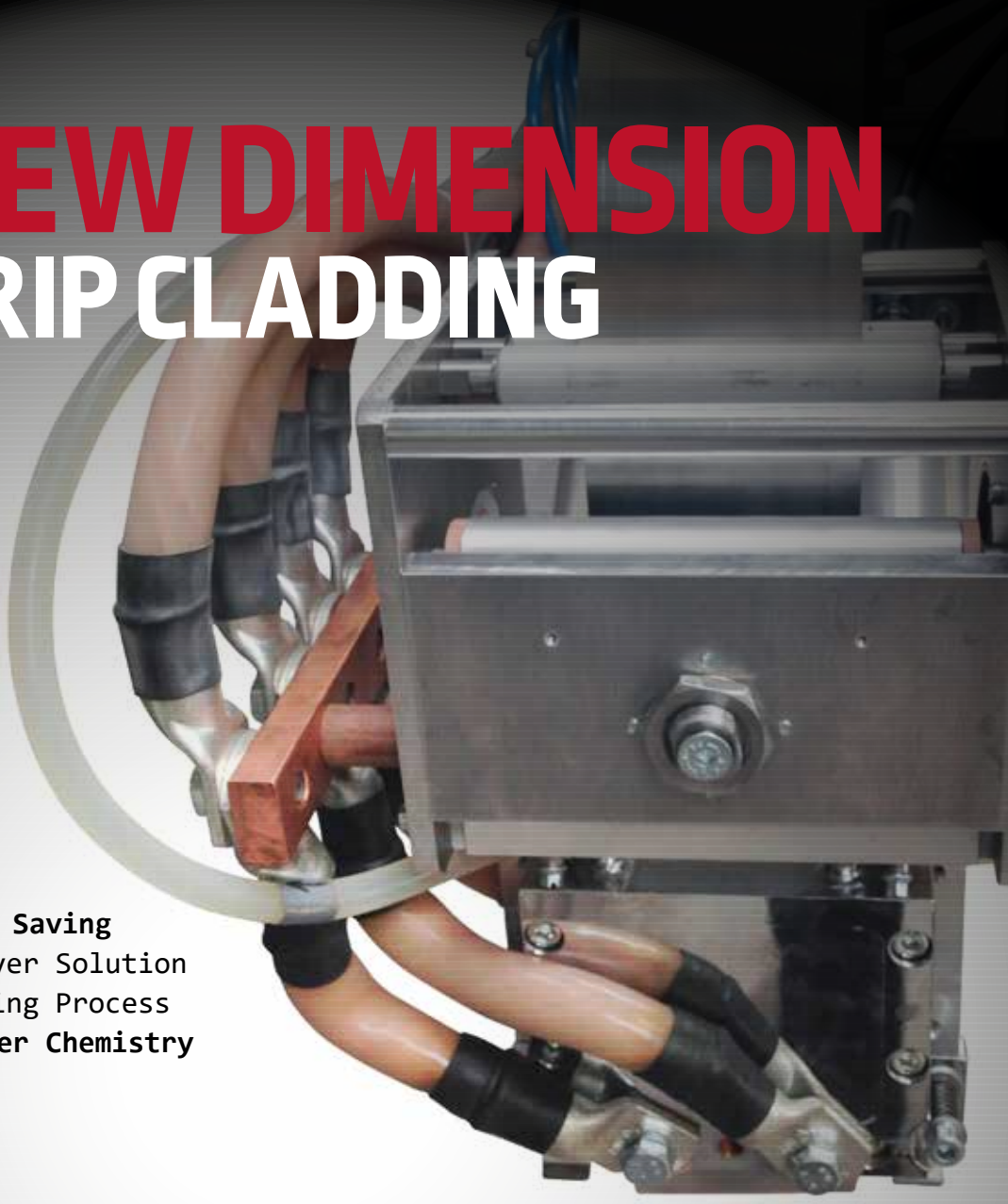

70% Time and 40% Cost Saving
- Always Single Layer Solution
- High Speed Cladding Process

Homogeneous and Cleaner Chemistry
- <5% Fe in Ni-625
- Improved Quality

Full Process Control
- State-of-the-Art Digital Hybrid 3D Z5 Controller
- Real Time Data Logging and Traceability

First Proven Single Layer High Speed Solution with Neutral Flux
- <5% Fe in Ni-625
- Required Undiluted AWS Chemistry for Stainless Steel

Reduction in Working Capital
- Single Stainless Steel Strip for All Austenitic SS Grades
- Faster Delivery of MCW and Full Control of Delivery Time

Instant Technical Service to Customer

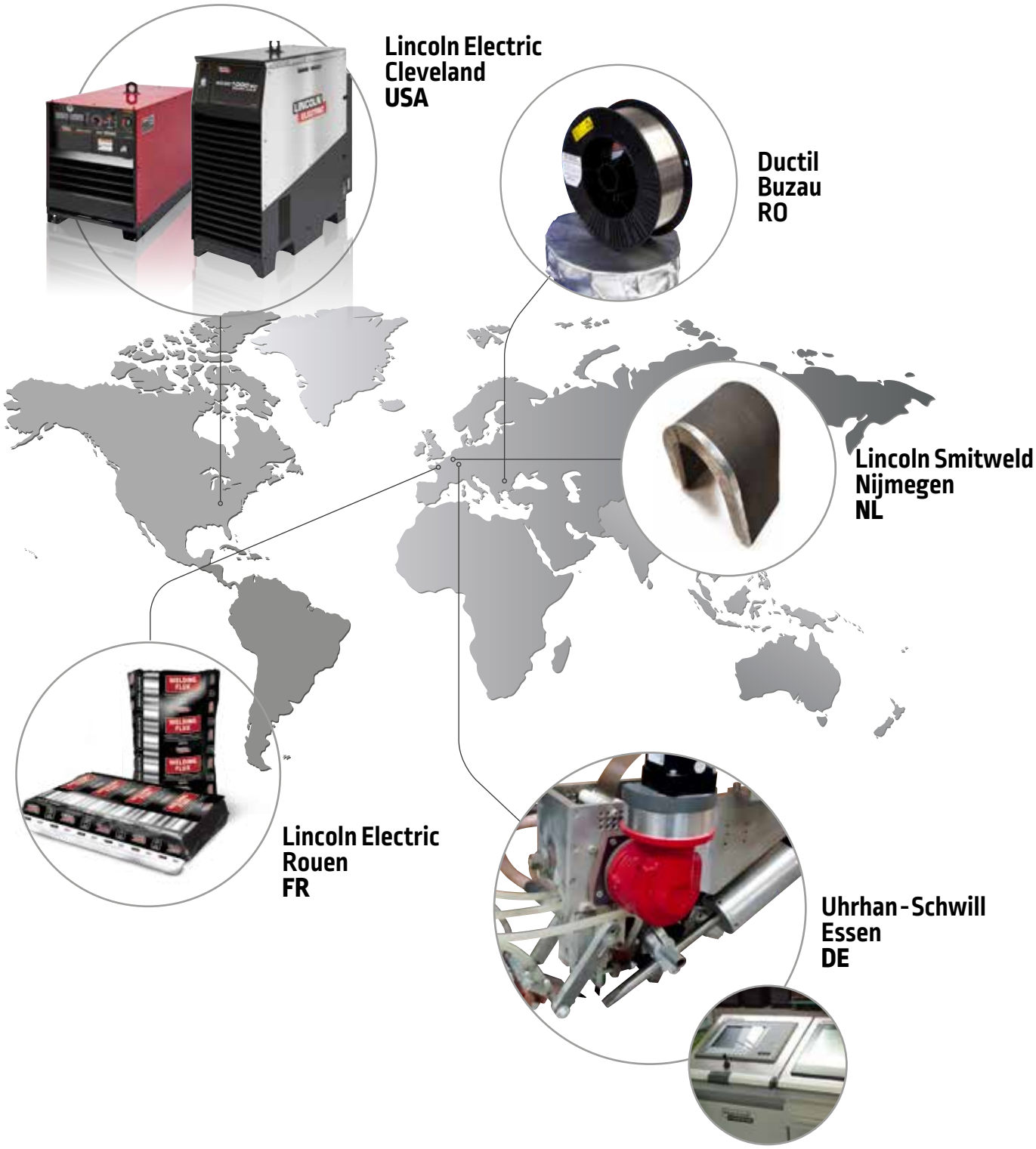

THE COMPLETE SOLUTION FROM A SINGLE SOURCE

TABLE OF CONTENTS

6 / STRIP CLADDING PROCESSES
6 / SUBMERGED ARC STRIP CLADDING
7 / ELECTRO SLAG STRIP CLADDING
13 / TOTAL SOLUTION FOR STRIP CLADDING
22 / UHRHAN-SCHWILL SCHWEISSTECHNIK
23 / ABOUT LINCOLN ELECTRIC

NEW! >

8 / HYBRID TECHNIQUE*

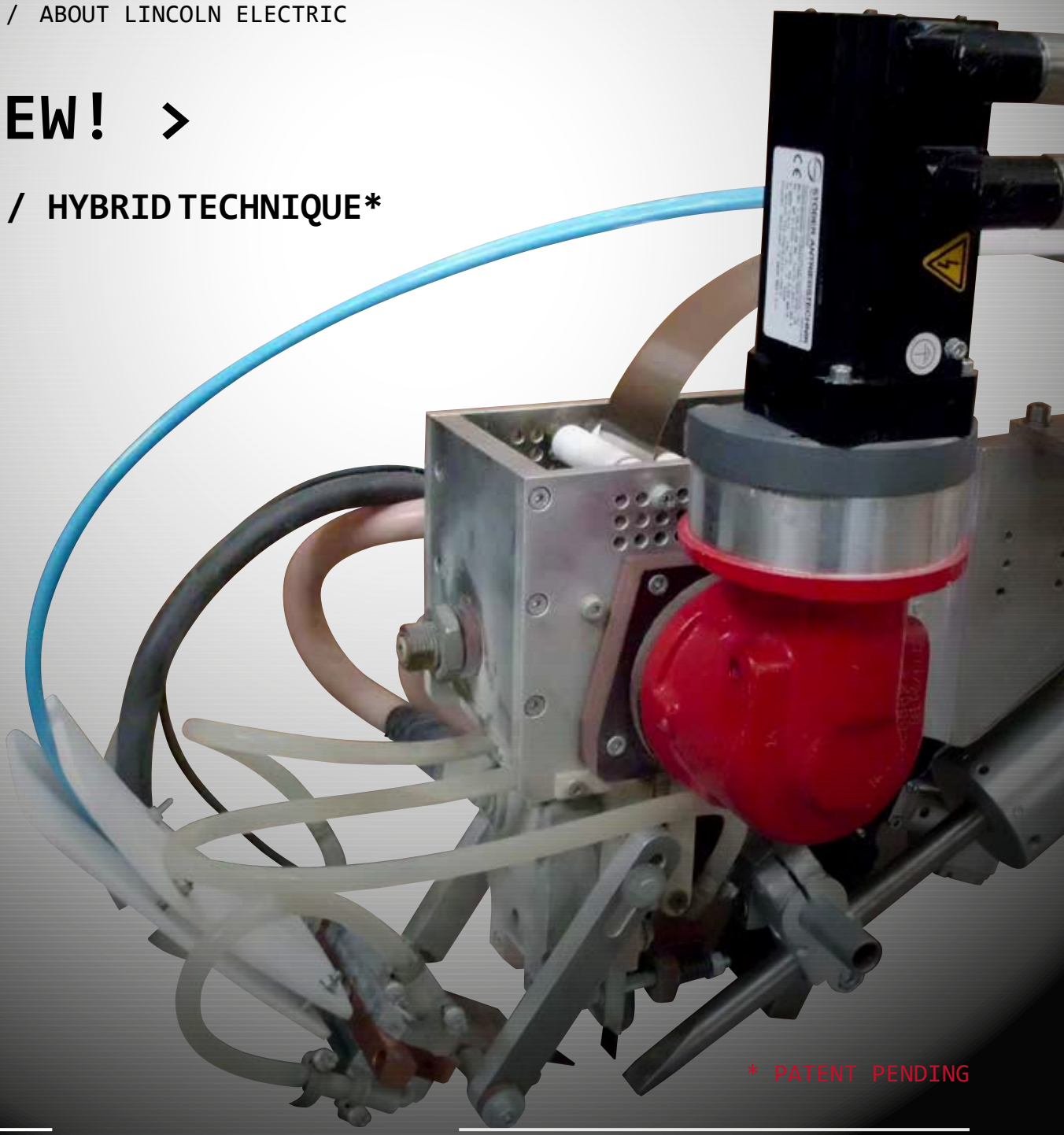

* PATENT PENDING

STRIP CLADDING PROCESSES

INTRODUCTION

Cladding is a fundamental process in the Fabrication industry and is applied across the whole spectrum of applications – from the nuclear, oil and gas industries to petrochemicals and steelmaking. Cladding is required on the process side of high pressure Critical Process Plant Equipment (CPE) to provide corrosion resistance against highly severe corrosive service fluid or to increase wear resistance of a component being subjected to heavy wear and tear applications e.g. continuous casting rollers in Steel mills. While CMn substrates, low alloy steels and other materials provide strength and other physical properties, cladding provides the desired corrosion and wear resistance. The result is extraordinary flexibility and cost savings.

There are many ways to apply this corrosion resistant layer – either by using roll-bonded or explosive bonded clad plates or by applying our more flexible weld cladding on a CMn or low alloy steel base material.

CLADDING PROCESSES

While most of the existing arc and electro slag welding processes can be utilized for weld cladding, strip cladding with submerged arc and electro slag welding process are the most attractive choices for applications that require large surface area coverage due to their substantially higher deposition and surface area coverage rates.

LADDING PROCESSES

There are two conventional strip cladding processes – Submerged Arc and Electro Slag.

SUBMERGED ARC STRIP CLADDING

- Utilises an arc that runs back and forth at high speed along the strip.
- The arc causes more penetration into the base material, resulting in dilution levels of ~20%.
- Deposition rate: 12-14 kg/h for 60x0.5mm strip.
- Current range restricted to limit dilution.

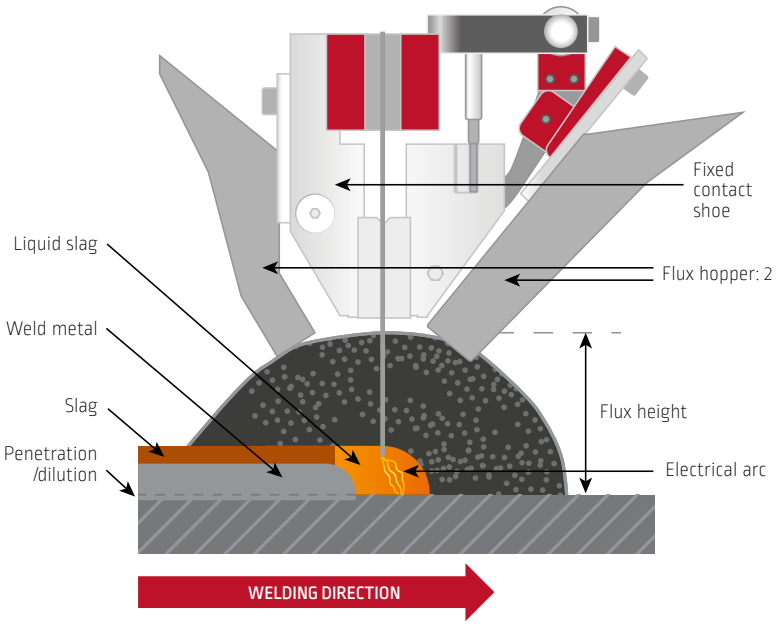

ELECTRO SLAG STRIP CLADDING

CONVENTIONAL

- **Arc-Less** process – uses conductive flux and works on Joule's resistance heating principle.
- The strip current passes through the molten slag. The resulting resistance heating effect melts the strip and deposits the molten weld pool onto the base material.
- Low dilution level (9-12%). Process has significant advantages over SAW.

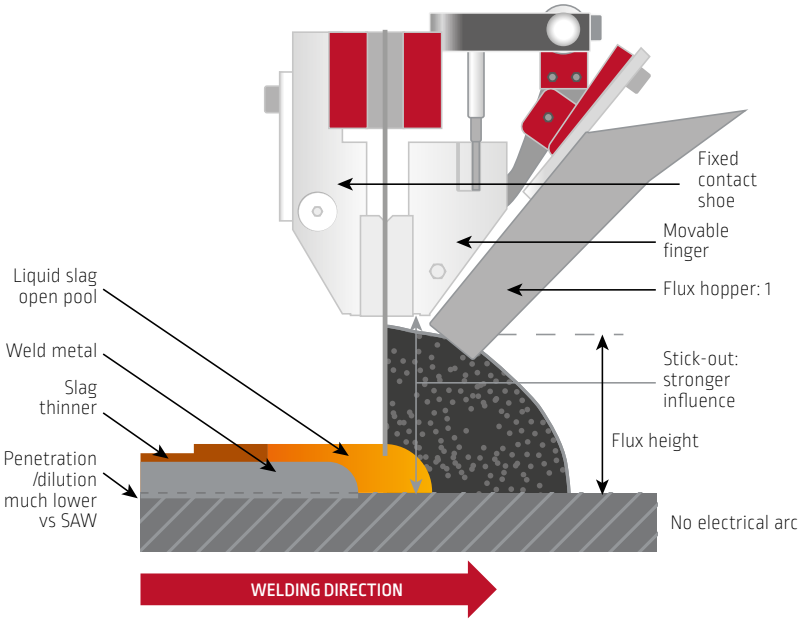

THE NEW DIMENSION IN STRIP CLADDING

AG STRIP CLADDING

HYBRID TECHNIQUE*

* Patent Pending

- New variant of ESW process
- State-of-the-art technique – **first** introduced by Lincoln Electric
- Hot metal cored wires added to the molten pool as 3rd constituent
- Consistently achieves <5% Fe in single layer for Ni-625 alloys
- **Always in single layer** coupled with **high welding speed**
- Completely eliminates the use of alloyed flux - uses fully neutral flux
- Lowest dilution level coupled with the highest deposition and faster surface coverage rates

180° side bend sample for Ni-625 cladding with Hybrid Technique

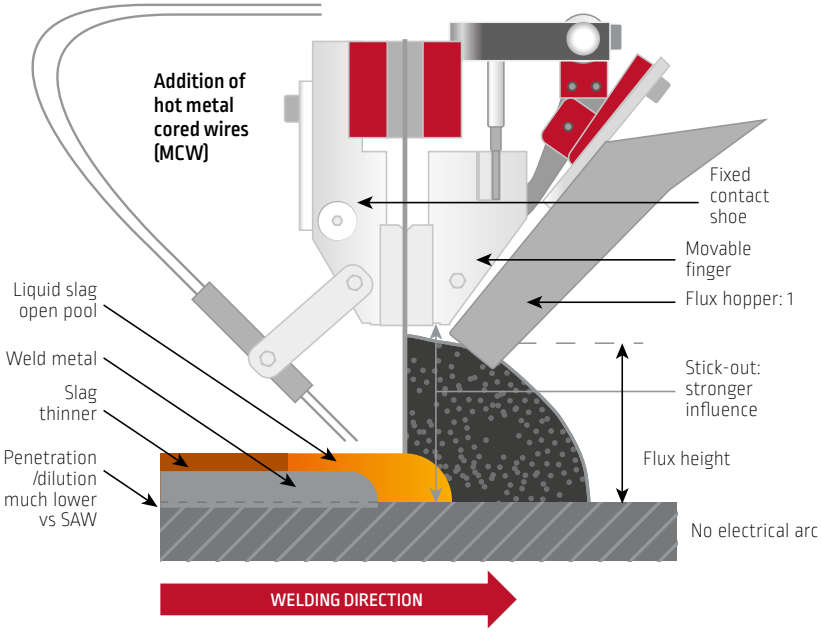

COMPARISON BETWEEN SUBMERGED ARC, ELECTRO SLAG – CONVENTIONAL AND H-ESC*

* Patent Pending

		Consumables	Deposition rate (kg/h) 60x0.5 mm strip	Welding speed (cm/min)	Minimum number of layers in Ni-625 to achieve <5% Fe chemistry	Flux type for high speed cladding in single layer
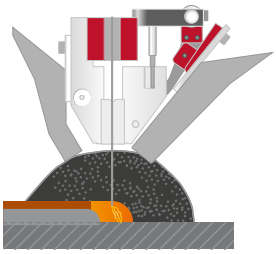	Submerged Arc	Strip + SAW Flux	12-14	10-14	2	NA
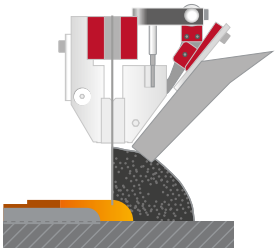	Electro Slag – Conventional	Strip + ESW Flux	22-30	Normal speed: 15-18 High speed: 24-35	2	Alloyed
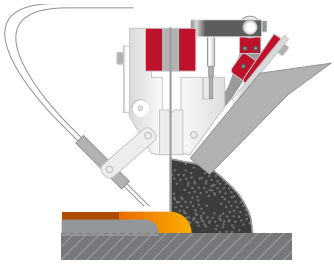	Electro Slag – Hybrid*	Strip + Metal Cored Wire + ESW Flux	28-42	24-40	1	Neutral

HYBRID TECHNIQUE*

* Patent Pending

MAIN BENEFITS

Less dilution: always achieves cleaner chemistry in a single layer

- Ni-625: <5% Fe
- Stainless steel and other Ni alloys: required AWS undiluted chemistry

High Speed Single Layer Solution – eliminates one full layer

- Less welding time: faster completion
- Savings in labor costs: more competitive
- Savings in NDE costs and time by eliminating one additional layer

Highest Deposition Rate (1.3-1.5 x)

- Higher stick-out
- Higher current
- Additional deposition from hot MCW

No active flux required

- Strictly meets licensor specification
- Uniform and homogeneous chemistry in production

ADDITIONAL BENEFITS

Single Flux Solution

- Neutral flux
- 3D CladFlux E200: single flux for all Ni alloys
- 3D CladFlux E100: single flux for all SS alloys

Only One Strip for all SS Alloys

- Single strip
- Only metal cored wire changed
- Faster delivery

H-ESC* Flux for HS ESW

- Advanced and cleaner H-ESC* flux can also be used for high speed ESW of Ni alloys and SS alloys

IMPROVED QUALITY

COST BENEFIT ANALYSIS – Ni-625 (TYPICAL)

* Patent Pending

INLET SEPARATOR

APPLICATION		
Cladding	Alloy 625	**Total**
Diameter	5 m	258.4 m^2
Length	13 m	

			Submerged Arc	Electro Slag		Hybrid*
				Conventional	High Speed (HS)	
PROCESS	Fe <5%	1 layer				●
		2 layers	●	●	●	
	Layer thickness	[mm]	8.7	8.7	6.5	5.0
	Welding speed***	[cm/min]	12.0	16.0	32.0	27.0
CONSUMABLE COST	Weldmetal	[MT]	20	20	15	11
		[€/m^2]	2 648	2 602	1 990	1 718
PRODUCTION COST	Number of beads	[#/m^2]	34	34	34	17
	Welding time	[min/m^2]	287	216	108	64
	Production	[€/m^2]**	479	359	180	106
TOTAL CLADDING	Cost saving (excl. NDE of one additional layer)		6%	–	-27%	-38%
	Production Time (excl. NDE of one additional layer)	[h]	1 238	928	464	275
	Production Time saving (excl. NDE of one additional layer)		33%	–	-50%	-70%

Alloyed flux only suitable for Iron >5% ** Including automation *** For each layer

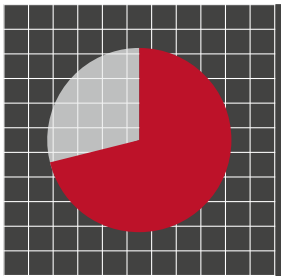

- **The new Hybrid Solution saves an enormous amount of time**
- **Releasing valuable workshop hours for fabricating more equipment within the same period**
- **Hybrid is the only existing single layer solution that guarantees Fe <5% in Ni-625 alloy**
- **Additional saving in time and cost due to elimination of NDE**
- **Eliminates use of alloyed flux**
- **The savings from one project will cover the costs of the investment**

70% TIME SAVING

TOTAL SOLUTION FOR STRIP CLADDING

The most important key to the success of Strip cladding process is to have the **right combination of**:

- Welding Consumables i.e. Strip, Flux and Wire (where applicable)
- Cladding Head
- Magnetic Steering Devices
- Welding Power Sources and Strip Feeding Device
- Hot Wire Feeding Mechanism
- Automatic Welding Control System

If even one of these key elements is absent, the process is likely to fail in achieving its desired output.
Lincoln Electric is the world leader, as it has top quality solutions and the desired expertise in all the above fields.

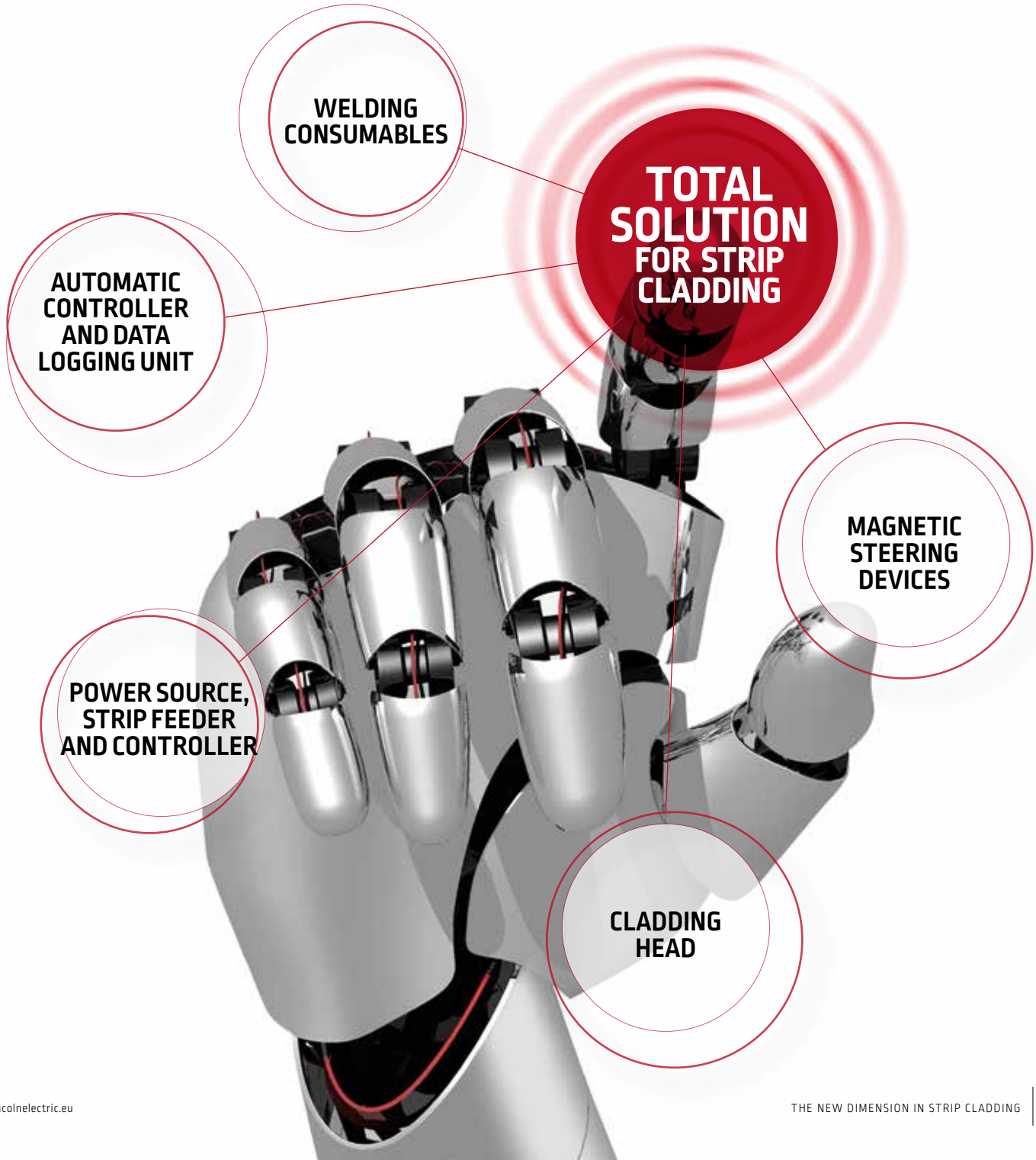

WELDING CONSUMABLES

* Patent Pending

Lincoln Electric manufactures a wide range of fluxes,strips and metal cored wires for these cladding processes to meet a variety of customer demands. The current range is as follows:

FLUX

- **2D CladFlux E200**
  - Neutral and basic in nature electro slag flux for use with nickel based strips
  - Designed for both normal and high speed cladding
  - **3D CladFlux E200** is the improved version of the same neutral flux, specially designed for H-ESC* application, and produces much cleaner weld metal.
- **2D CladFlux E100**
  - Neutral and basic in nature electro slag flux
  - Used for high speed cladding of stainless steel strips
  - **3D CladFlux E100** is the improved version of the same neutral flux, specially designed for H-ESC* application, and produces much cleaner weld metal.
- **2D CladFlux E102**
  - Neutral and highly basic in nature electro slag flux
  - Used for normal speed cladding of stainless steel strips
- **2D CladFlux S200 and 2D CladFlux S100**
  - Submerged arc flux for use with Ni based alloys and stainless steel strips respectively.

Lincoln Electric offers **only Neutral flux** for all ESW and H-ESC* applications as desired by Process Licensors and End Users.

STRIP

- All Ni based alloys and stainless strips are specially designed by Lincoln Electric for Submerged Arc / Eletro Slag - Conventional and H-ESC* applications with their corresponding fluxes.
  - Submerged arc strip cladding with double layer technique
  - Electro slag strip cladding at normal speed with single and double layer technique
  - Electro slag strip cladding at high speed with single and double layer technique
  - Hybrid electro slag cladding at high speed with single layer technique

Stainless steel and Ni alloys strips are available in standard sizes of 30x0.5 / 60x0.5 / 90x0.5 / 120x0.5 (only for SS). Strips of other widths and thicknesses may be made available if required.

METAL CORED WIRE

Metal cored wires for Ni based alloys and stainless steel are specially designed and manufactured in the Ductil facility of Lincoln Electric, in Buzau. The end product is a weld metal with the desired properties. This is **always in a single layer**.

These wires have a special composition and are to be used exclusively for H-ESC* application with corresponding strip – flux combination.

CONSUMABLES PORTFOLIO

* Patent Pending

NICKEL BASE ALLOYS

	Electro Slag	
Submerged Arc	Conventional	Hybrid*
CladStrip 625 (EQ NiCrMo-3)	CladStrip 625 (EQ NiCrMo-3)	CladStrip 625 (EQ NiCrMo-3)
CladStrip 825 (EQ NiFeCr-1)	CladStrip 825 (EQ NiFeCr-1)	CladStrip 825 (EQ NiFeCr-1)
CladStrip 600 (EQ NiCr-3)	CladStrip 600 (EQ NiCr-3)	CladStrip 600 (EQ NiCr-3)
CladStrip 400 (EQ NiCu-7)	CladStrip 400 (EQ NiCu-7)	CladStrip 400 (EQ NiCu-7)
2D CladFlux S200	2D CladFlux E200	3D CladFlux E200
2D CladFlux S100		3D CladCore 625
		3D CladCore 825
		3D CladCore 600
		3D CladCore 400

STAINLESS STEEL

	Electro Slag	
Submerged Arc	Conventional	Hybrid*
CladStrip 24.13L (EQ 309L)	CladStrip 22.11L (~EQ309L)	CladStrip 300
CladStrip 19.9L (EQ 308L)	CladStrip 21.13.3L (EQ309LMo)	3D CladCore 308L
CladStrip 19.12.3L (EQ 316L)	CladStrip 21.11LNb (~EQ347OA)	3D CladCore 316L
CladStrip 24.13LNb (~EQ 309LNb)	CladStrip 19.9L (EQ308L)	3D CladCore 347
CladStrip 19.9LNb (EQ 347)	CladStrip 19.12.3L (EQ316L)	3D CladCore 317L
2D CladFlux S100	CladStrip 19.9LNb (EQ347)	3D CladFlux E100
	CladStrip 24.13L (EQ309L)	
	CladStrip 24.13LNb (~EQ309LNb)	
	CladStrip 19.13.4L (EQ317L)	
	2D CladFlux E102	
	2D CladFlux E100	

CONSUMABLES – Ni ALLOYS

* Patent Pending

				CONSUMABLE DETAILS			
DEPOSIT	**PROCESS / TECHNIQUE**	**SPEED**	**LAYER**	**LAYER-1 STRIP**	**LAYER-2 STRIP**	**FLUX**	**MCW**
Ni-625	H-ESC*	High	1	CladStrip 625	–	3D CladFlux E200	3D CladCore 625
	ESW -Conventional	Standard	1	CladStrip 625	–	2D CladFlux E200	–
		High	2	CladStrip 625	CladStrip 625	2D CladFlux E200	–
	SAW	Standard	2	CladStrip 625	CladStrip 625	2D CladFlux S200	–
Ni-825	H-ESC*	High	1	CladStrip 825	–	3D CladFlux E200	3D CladCore 825
	ESW -Conventional	Standard	1	CladStrip 825	–	2D CladFlux E200	–
		High	2	CladStrip 825	CladStrip 825	2D CladFlux E200	–
	SAW	Standard	2	CladStrip 825	CladStrip 825	2D CladFlux S200	–
Ni-600	H-ESC*	High	1	CladStrip 600	–	3D CladFlux E200	3D CladCore 600
	ESW -Conventional	Standard	1	CladStrip 600	–	2D CladFlux E200	–
		High	2	CladStrip 600	CladStrip 600	2D CladFlux E200	–
	SAW	Standard	2	CladStrip 600	CladStrip 600	2D CladFlux S200	–
Ni-400	H-ESC*	High	1	CladStrip 400	–	3D CladFlux E200	3D CladCore 400
	ESW -Conventional	High	2	CladStrip 400	CladStrip 400	2D CladFlux E200	–
	SAW	Standard	2	CladStrip 400	CladStrip 400	2D CladFlux S200	–

CONSUMABLES – STAINLESS STEEL

* Patent Pending

				CONSUMABLE DETAILS			
DEPOSIT	**PROCESS / TECHNIQUE**	**SPEED**	**LAYER**	**LAYER-1 STRIP**	**LAYER-2 STRIP**	**FLUX**	**MCW**
SS - 347	H-ESC*	High	1	CladStrip 300	–	3D CladFlux E100	3D CladCore 347
	ESW -Conventional	High	1	CladStrip 24.13LNb	–	2D CladFlux E100	–
			2	CladStrip 24.13LNb	CladStrip 19.9LNb	2D CladFlux E100	–
		Standard	1	CladStrip 21.11LNb	–	2D CladFlux E102	–
			2	CladStrip 22.11L	CladStrip 19.9LNb	2D CladFlux E102	–
			2	CladStrip 21.11LNb	CladStrip 19.9LNb	2D CladFlux E102	–
	SAW	Standard	2	CladStrip 24.13LNb	CladStrip 19.9LNb	2D CladFlux S100	–
SS - 308L	H-ESC*	High	1	CladStrip 300	–	3D CladFlux E100	3D CladCore 308L
	ESW -Conventional	High	1	CladStrip 24.13L	–	2D CladFlux E100	–
			2	CladStrip 24.13L	CladStrip 19.9L	2D CladFlux E100	–
		Standard	1	CladStrip 22.11L	–	2D CladFlux E102	–
			2	CladStrip 22.11L	CladStrip 19.9L	2D CladFlux E102	–
	SAW	Standard	2	CladStrip 24.13L	CladStrip 19.9L	2D CladFlux S100	–
SS - 316L	H-ESC*	High	1	CladStrip 300	–	3D CladFlux E100	3D CladCore 316L
	ESW -Conventional	High	2	CladStrip 24.13L	CladStrip 19.12.3L	2D CladFlux E100	–
		Standard	1	CladStrip 21.13.3L	–	2D CladFlux E102	–
			2	CladStrip 21.13.3L	CladStrip 19.12.3L	2D CladFlux E102	–
	SAW	Standard	2	CladStrip 24.13L	CladStrip 19.12.3L	2D CladFlux S100	–
SS - 317L	H-ESC*	High	1	CladStrip 300	–	3D CladFlux E100	3D CladCore 317L
	ESW -Conventional	High	2	CladStrip 24.13L	CladStrip 19.13.4L	2D CladFlux E100	–
		Standard	2	CladStrip 21.13.3L	CladStrip 19.13.4L	2D CladFlux E102	–

WELDING HEADS, ACCESSORIES AND CONTROLLER

CLADDING HEAD

- In-house designed cladding heads for wide range of strip widths (15 to 120 mm)
- Water-cooled and robust modular design
- Power cables can be added as required
- Easily oriented for desired welding direction
- Specifically designed for use in H-ESC* applications involving simultaneous feeding of strip, flux and hot wire

* Patent Pending

MAGNETIC STEERING DEVICES

- Neutralises effect of strong electromagnetic pull generated by high welding current, enabling weld bead to spread wider with smoother overlap and edge profile
- Digitally controlled magnetic steering devices for Electro Slag - Conventional and H-ESC* with strip size ≥ 60 mm
- Air-cooled, and field poles can be changed between North and South quickly
- Current range of up to 15A

HOT WIRE FEEDING MECHANISM

- For H-ESC*, multiple hot metal cored wires are fed to the molten weld pool to achieve final chemistry in single layer with increased productivity
- Hot wire feeding mechanism uses modified Idealarc® DC 1000 or Power Wave® AC/DC 1000 SD power sources.

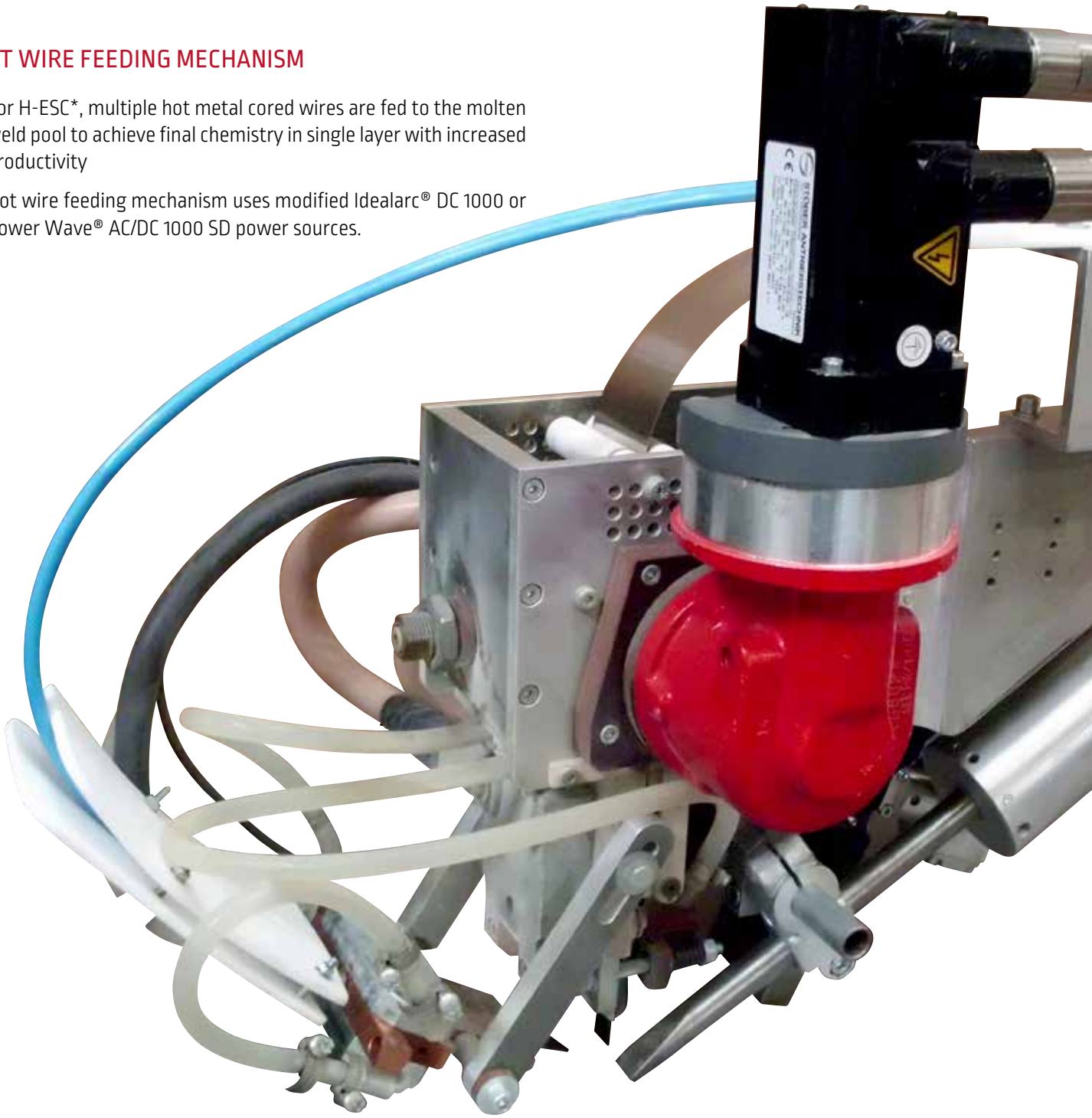

WELDING POWER SOURCES AND STRIP FEEDING DEVICE

* Patent Pending

- Lincoln Idealarc® DC 1000 and 1500 power sources along with NA-5 or NA-3 strip feeding head and controller are the most widely used combinations across the world for conventional strip cladding.
- Multiple power sources can easily be connected in parallel to generate welding currents of up to 3000 Amp or more.
- Set of modified new generation inverter-based Power Wave® AC/DC 1000 SD or Modified Idealarc® DC 1000 power sources are connected in parallel for H-ESC* applications in conjunction with 'Hybrid 3D Z5' control system. Same combinations can now as well be used for conventional strip cladding.

MAIN FEATURES

- The most widely used power sources, controllers and strip feeders in the world.
- Can easily be combined in parallel to supply a current of 3 000 Amp or more.
- Energy saving while using Inverter based power sources.

AUTOMATIC WELDING CONTROL AND DATA LOGGING SYSTEM: HYBRID 3D Z5

- Unique development by Uhrhan-Schwill Schweißtechnik.
- Ensures pre-determined ratio of strip and wire feeding maintained for H-ESC* application.
- Effectively controls all the critical parameters and functions in the cladding process
  - current, voltage, welding speed, strip and wire feeding speed, crater filling, magnetic steering device current, electrical stick-out etc.
- Special Access Control features restrict complete control of welding parameters to welding engineers.
- Records and saves minute details of each of these parameters, thus acting as a high-end data logger.
- Fabricators have perfect data traceability and retrieval.
- Specially features can be added, e.g. preheat control, laser seam tracking control, live video recording facility etc.

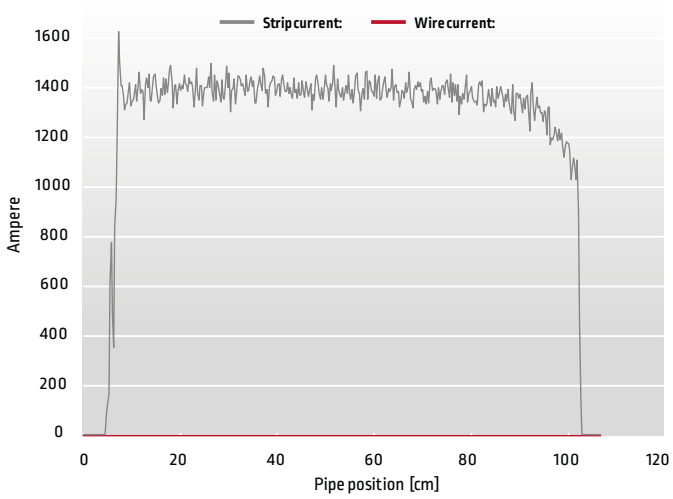

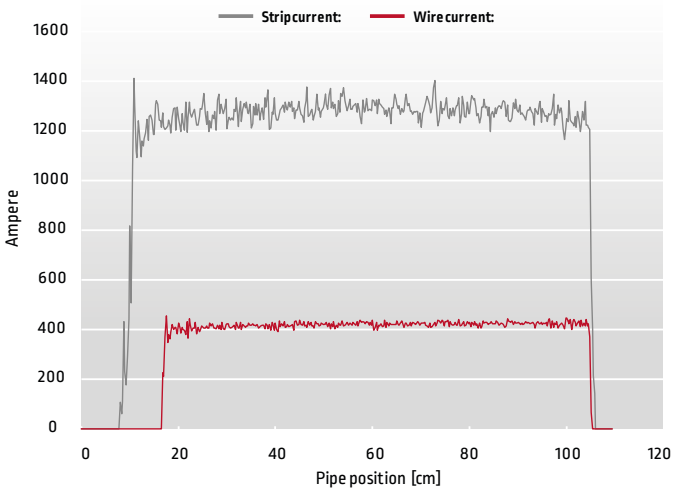

Uhrhan-Schwill SCHWEISSTECHNIK
A Lincoln Electric Company

Pipemills

Multi Arc, Sub Arc Technology

Global Leader in Longitudinal Pipe Welding and Leading Position in Spiral Pipe Welding

Critical Process Equipment

Strip Cladding complete solution

Narrow Gap Welding complete solution

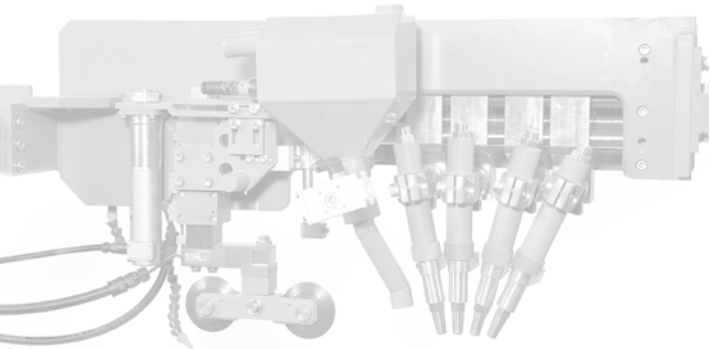

BEING PRESENT LOCALLY
MAKES US MORE AWARE GLOBALLY

120+
YEARS OF EXPERIENCE

325+
GLOBAL R&D TEAM

36
SOLUTION CENTERS

3.0
BILLION USD REVENUE

11 000
EMPLOYEES WORLDWIDE

Global Headquarters
Solution Centers

SPECIAL ALLOYS™

CUSTOMER ASSISTANCE POLICY

The business of The Lincoln Electric Company® is manufacturing and selling high quality welding equipment, consumables, and cutting equipment. Our challenge is to meet the needs of our customers and to exceed their expectations. On occasion, purchasers may ask Lincoln Electric for information or advice about their use of our products. Our employees respond to inquiries to the best of their ability based on information provided to them by the customers and the knowledge they may have concerning the application. Our employees, however, are not in a position to verify the information provided or to evaluate the engineering requirements for the particular weldment. Accordingly, Lincoln Electric does not warrant or guarantee or assume any liability with respect to such information or advice. Moreover, the provision of such information or advice does not create, expand, or alter any warranty on our products. Any express or implied warranty that might arise from the information or advice, including any implied warranty of merchantability or any warranty of fitness for any customers' particular purpose is specifically disclaimed.

Lincoln Electric is a responsive manufacturer, but the selection and use of specific products sold by Lincoln Electric is solely within the control of, and remains the sole responsibility of the customer. Many variables beyond the control of Lincoln Electric affect the results obtained in applying these types of fabrication methods and service requirements.

Subject to Change – This information is accurate to the best of our knowledge at the time of printing. Please refer to www.lincolnelectric.eu for any updated information.

www.lincolnelectricurope.com

LINCOLN ELECTRIC