TIG MODULE MACHINE SCHEMATIC L12063 REV: A

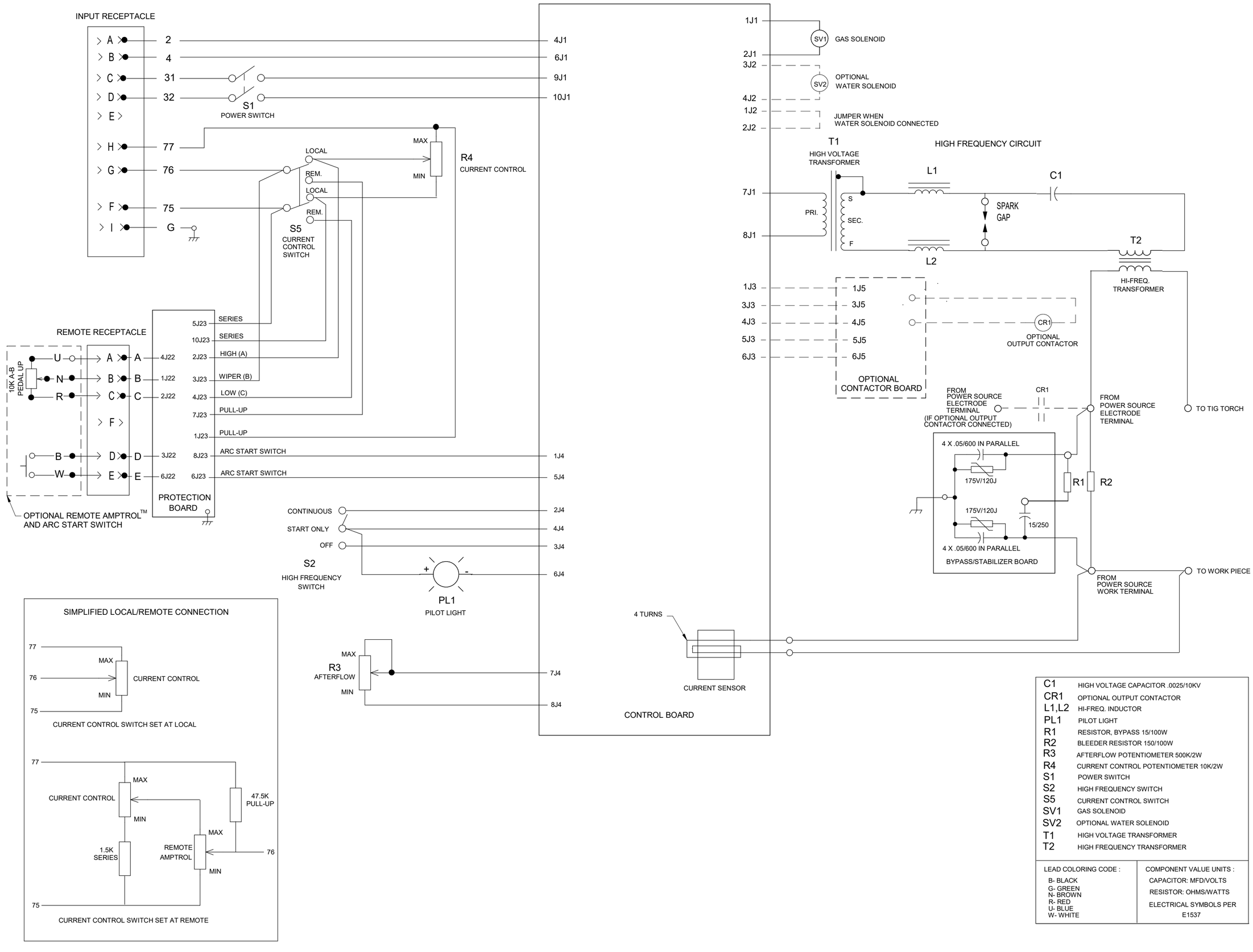

C1	HIGH VOLTAGE CAPACITOR .0025/10KV
CR1	OPTIONAL OUTPUT CONTACTOR
L1,L2	HI-FREQ. INDUCTOR
PL1	PILOT LIGHT
R1	RESISTOR, BYPASS 15/100W
R2	BLEEDER RESISTOR 150/100W
R3	AFTERFLOW POTENTIOMETER 500K/2W
R4	CURRENT CONTROL POTENTIOMETER 10K/2W
S1	POWER SWITCH
S2	HIGH FREQUENCY SWITCH
S5	CURRENT CONTROL SWITCH
SV1	GAS SOLENOID
SV2	OPTIONAL WATER SOLENOID
T1	HIGH VOLTAGE TRANSFORMER
T2	HIGH FREQUENCY TRANSFORMER

LEAD COLORING CODE :	COMPONENT VALUE UNITS :
B- BLACK G- GREEN N- BROWN R- RED U- BLUE W- WHITE	CAPACITOR: MFD/VOLTS RESISTOR: OHMS/WATTS ELECTRICAL SYMBOLS PER E1537