IM474-E

February, 2011

IDEALARC® DC-400

For use with machines having Code Numbers: 9847 thru 9852, 9854, 9855, 9857, 10008, 10275, 10276, 10859, 10880, 11083, 11084, 11277, 11278, 11279 11348, 11349, 11350, 11351, 11352, 11353, 11567

This manual covers equipment which is no longer in production by The Lincoln Electric Co. Specifications and availability of optional features may have changed.

Safety Depends on You

Lincoln arc welding and cutting equipment is designed and built with safety in mind. However, your overall safety can be increased by proper installation ... and thoughtful operation on your part. **DO NOT INSTALL, OPERATE OR REPAIR THIS EQUIPMENT WITHOUT READING THIS MANUAL AND THE SAFETY PRECAUTIONS CONTAINED THROUGHOUT.** And, most importantly, think before you act and be careful.

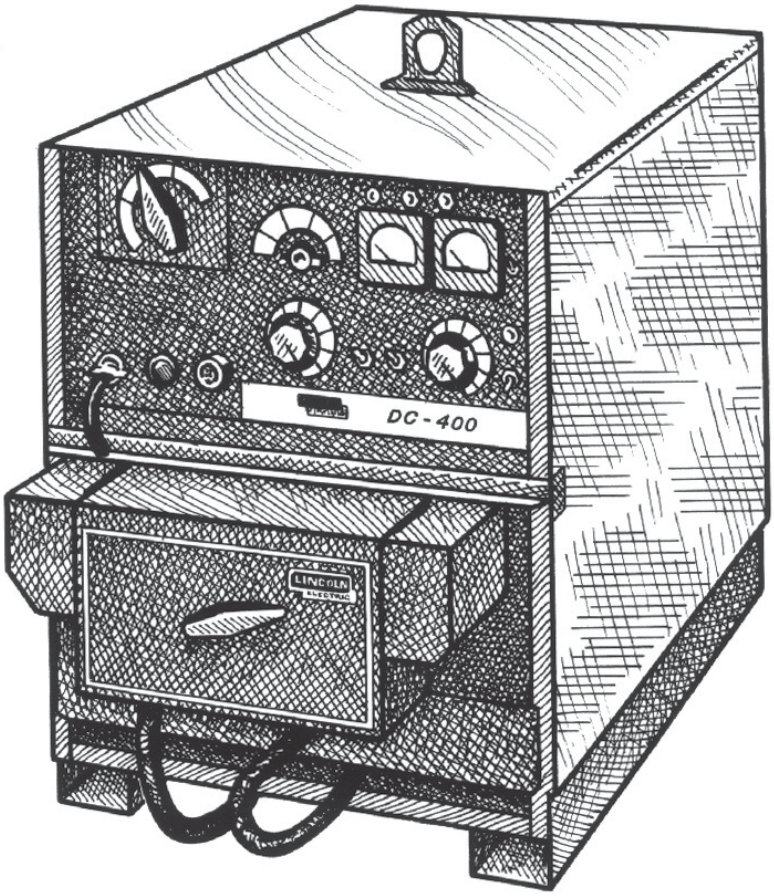

OPERATOR'S MANUAL

ISO 9001

Designed and Manufactured Under a Quality Program Certified by ABS Quality Evaluations, Inc. to ISO 9001 Requirements.
CERTIFICATE NUMBER: 30273

Copyright © Lincoln Global Inc.

LINCOLN® ELECTRIC

• World's Leader in Welding and Cutting Products •
• Sales and Service through Subsidiaries and Distributors Worldwide •

Cleveland, Ohio 44117-1199 U.S.A. TEL: 216.481.8100 FAX: 216.486.1751 WEB SITE: www.lincolnelectric.com

WARNING

CALIFORNIA PROPOSITION 65 WARNINGS

Diesel engine exhaust and some of its constituents are known to the State of California to cause cancer, birth defects, and other reproductive harm.

The Above For Diesel Engines

The engine exhaust from this product contains chemicals known to the State of California to cause cancer, birth defects, or other reproductive harm.

The Above For Gasoline Engines

ARC WELDING CAN BE HAZARDOUS. PROTECT YOURSELF AND OTHERS FROM POSSIBLE SERIOUS INJURY OR DEATH. KEEP CHILDREN AWAY. PACEMAKER WEARERS SHOULD CONSULT WITH THEIR DOCTOR BEFORE OPERATING.

Read and understand the following safety highlights. For additional safety information, it is strongly recommended that you purchase a copy of “Safety in Welding & Cutting - ANSI Standard Z49.1” from the American Welding Society, P.O. Box 351040, Miami, Florida 33135 or CSA Standard W117.2-1974. A Free copy of “Arc Welding Safety” booklet E205 is available from the Lincoln Electric Company, 22801 St. Clair Avenue, Cleveland, Ohio 44117-1199.

BE SURE THAT ALL INSTALLATION, OPERATION, MAINTENANCE AND REPAIR PROCEDURES ARE PERFORMED ONLY BY QUALIFIED INDIVIDUALS.

FOR ENGINE powered equipment.

1.a. Turn the engine off before troubleshooting and maintenance work unless the maintenance work requires it to be running.

1.b. Operate engines in open, well-ventilated areas or vent the engine exhaust fumes outdoors.

1.c. Do not add the fuel near an open flame welding arc or when the engine is running. Stop the engine and allow it to cool before refueling to prevent spilled fuel from vaporizing on contact with hot engine parts and igniting. Do not spill fuel when filling tank. If fuel is spilled, wipe it up and do not start engine until fumes have been eliminated.

1.d. Keep all equipment safety guards, covers and devices in position and in good repair.Keep hands, hair, clothing and tools away from V-belts, gears, fans and all other moving parts when starting, operating or repairing equipment.

1.e. In some cases it may be necessary to remove safety guards to perform required maintenance. Remove guards only when necessary and replace them when the maintenance requiring their removal is complete. Always use the greatest care when working near moving parts.

1.f. Do not put your hands near the engine fan. Do not attempt to override the governor or idler by pushing on the throttle control rods while the engine is running.

1.g. To prevent accidentally starting gasoline engines while turning the engine or welding generator during maintenance work, disconnect the spark plug wires, distributor cap or magneto wire as appropriate.

1.h. To avoid scalding, do not remove the radiator pressure cap when the engine is hot.

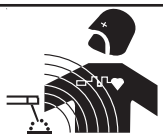

ELECTRIC AND MAGNETIC FIELDS may be dangerous

2.a. Electric current flowing through any conductor causes localized Electric and Magnetic Fields (EMF). Welding current creates EMF fields around welding cables and welding machines

2.b. EMF fields may interfere with some pacemakers, and welders having a pacemaker should consult their physician before welding.

2.c. Exposure to EMF fields in welding may have other health effects which are now not known.

2.d. All welders should use the following procedures in order to minimize exposure to EMF fields from the welding circuit:

2.d.1. Route the electrode and work cables together - Secure them with tape when possible.

2.d.2. Never coil the electrode lead around your body.

2.d.3. Do not place your body between the electrode and work cables. If the electrode cable is on your right side, the work cable should also be on your right side.

2.d.4. Connect the work cable to the workpiece as close as possible to the area being welded.

2.d.5. Do not work next to welding power source.

ELECTRIC SHOCK can kill.

3.a. The electrode and work (or ground) circuits are electrically "hot" when the welder is on. Do not touch these "hot" parts with your bare skin or wet clothing. Wear dry, hole-free gloves to insulate hands.

3.b. Insulate yourself from work and ground using dry insulation. Make certain the insulation is large enough to cover your full area of physical contact with work and ground.

In addition to the normal safety precautions, if welding must be performed under electrically hazardous conditions (in damp locations or while wearing wet clothing; on metal structures such as floors, gratings or scaffolds; when in cramped positions such as sitting, kneeling or lying, if there is a high risk of unavoidable or accidental contact with the workpiece or ground) use the following equipment:

- **Semiautomatic DC Constant Voltage (Wire) Welder.**
- **DC Manual (Stick) Welder.**
- **AC Welder with Reduced Voltage Control.**

3.c. In semiautomatic or automatic wire welding, the electrode, electrode reel, welding head, nozzle or semiautomatic welding gun are also electrically "hot".

3.d. Always be sure the work cable makes a good electrical connection with the metal being welded. The connection should be as close as possible to the area being welded.

3.e. Ground the work or metal to be welded to a good electrical (earth) ground.

3.f. Maintain the electrode holder, work clamp, welding cable and welding machine in good, safe operating condition. Replace damaged insulation.

3.g. Never dip the electrode in water for cooling.

3.h. Never simultaneously touch electrically "hot" parts of electrode holders connected to two welders because voltage between the two can be the total of the open circuit voltage of both welders.

3.i. When working above floor level, use a safety belt to protect yourself from a fall should you get a shock.

3.j. Also see Items 6.c. and 8.

ARC RAYS can burn.

4.a. Use a shield with the proper filter and cover plates to protect your eyes from sparks and the rays of the arc when welding or observing open arc welding. Headshield and filter lens should conform to ANSI Z87. I standards.

4.b. Use suitable clothing made from durable flame-resistant material to protect your skin and that of your helpers from the arc rays.

4.c. Protect other nearby personnel with suitable, non-flammable screening and/or warn them not to watch the arc nor expose themselves to the arc rays or to hot spatter or metal.

FUMES AND GASES can be dangerous.

5.a. Welding may produce fumes and gases hazardous to health. Avoid breathing these fumes and gases. When welding, keep your head out of the fume. Use enough ventilation and/or exhaust at the arc to keep fumes and gases away from the breathing zone. **When welding with electrodes which require special ventilation such as stainless or hard facing (see instructions on container or MSDS) or on lead or cadmium plated steel and other metals or coatings which produce highly toxic fumes, keep exposure as low as possible and within applicable OSHA PEL and ACGIH TLV limits using local exhaust or mechanical ventilation. In confined spaces or in some circumstances, outdoors, a respirator may be required. Additional precautions are also required when welding on galvanized steel.**

5. b. The operation of welding fume control equipment is affected by various factors including proper use and positioning of the equipment, maintenance of the equipment and the specific welding procedure and application involved. Worker exposure level should be checked upon installation and periodically thereafter to be certain it is within applicable OSHA PEL and ACGIH TLV limits.

5.c. Do not weld in locations near chlorinated hydrocarbon vapors coming from degreasing, cleaning or spraying operations. The heat and rays of the arc can react with solvent vapors to form phosgene, a highly toxic gas, and other irritating products.

5.d. Shielding gases used for arc welding can displace air and cause injury or death. Always use enough ventilation, especially in confined areas, to insure breathing air is safe.

5.e. Read and understand the manufacturer's instructions for this equipment and the consumables to be used, including the material safety data sheet (MSDS) and follow your employer's safety practices. MSDS forms are available from your welding distributor or from the manufacturer.

5.f. Also see item 1.b.

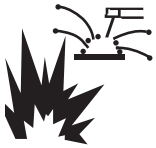

WELDING and CUTTING SPARKS can cause fire or explosion.

6.a. Remove fire hazards from the welding area. If this is not possible, cover them to prevent the welding sparks from starting a fire. Remember that welding sparks and hot materials from welding can easily go through small cracks and openings to adjacent areas. Avoid welding near hydraulic lines. Have a fire extinguisher readily available.

6.b. Where compressed gases are to be used at the job site, special precautions should be used to prevent hazardous situations. Refer to "Safety in Welding and Cutting" (ANSI Standard Z49.1) and the operating information for the equipment being used.

6.c. When not welding, make certain no part of the electrode circuit is touching the work or ground. Accidental contact can cause overheating and create a fire hazard.

6.d. Do not heat, cut or weld tanks, drums or containers until the proper steps have been taken to insure that such procedures will not cause flammable or toxic vapors from substances inside. They can cause an explosion even though they have been "cleaned". For information, purchase "Recommended Safe Practices for the Preparation for Welding and Cutting of Containers and Piping That Have Held Hazardous Substances", AWS F4.1 from the American Welding Society (see address above).

6.e. Vent hollow castings or containers before heating, cutting or welding. They may explode.

6.f. Sparks and spatter are thrown from the welding arc. Wear oil free protective garments such as leather gloves, heavy shirt, cuffless trousers, high shoes and a cap over your hair. Wear ear plugs when welding out of position or in confined places. Always wear safety glasses with side shields when in a welding area.

6.g. Connect the work cable to the work as close to the welding area as practical. Work cables connected to the building framework or other locations away from the welding area increase the possibility of the welding current passing through lifting chains, crane cables or other alternate circuits. This can create fire hazards or overheat lifting chains or cables until they fail.

6.h. Also see item 1.c.

6.I. Read and follow NFPA 51B " Standard for Fire Prevention During Welding, Cutting and Other Hot Work", available from NFPA, 1 Batterymarch Park, PO box 9101, Quincy, Ma 022690-9101.

6.j. Do not use a welding power source for pipe thawing.

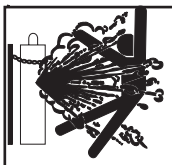

CYLINDER may explode if damaged.

7.a. Use only compressed gas cylinders containing the correct shielding gas for the process used and properly operating regulators designed for the gas and pressure used. All hoses, fittings, etc. should be suitable for the application and maintained in good condition.

7.b. Always keep cylinders in an upright position securely chained to an undercarriage or fixed support.

7.c. Cylinders should be located:

- Away from areas where they may be struck or subjected to physical damage.
- A safe distance from arc welding or cutting operations and any other source of heat, sparks, or flame.

7.d. Never allow the electrode, electrode holder or any other electrically "hot" parts to touch a cylinder.

7.e. Keep your head and face away from the cylinder valve outlet when opening the cylinder valve.

7.f. Valve protection caps should always be in place and hand tight except when the cylinder is in use or connected for use.

7.g. Read and follow the instructions on compressed gas cylinders, associated equipment, and CGA publication P-I, "Precautions for Safe Handling of Compressed Gases in Cylinders," available from the Compressed Gas Association 1235 Jefferson Davis Highway, Arlington, VA 22202.

FOR ELECTRICALLY powered equipment.

8.a. Turn off input power using the disconnect switch at the fuse box before working on the equipment.

8.b. Install equipment in accordance with the U.S. National Electrical Code, all local codes and the manufacturer's recommendations.

8.c. Ground the equipment in accordance with the U.S. National Electrical Code and the manufacturer's recommendations.

Refer to **http://www.lincolnelectric.com/safety** for additional safety information.

PRÉCAUTIONS DE SÛRETÉ

Pour votre propre protection lire et observer toutes les instructions et les précautions de sûreté specifiques qui parraissent dans ce manuel aussi bien que les précautions de sûreté générales suivantes:

Sûreté Pour Soudage A L'Arc

1. Protegez-vous contre la secousse électrique:

   a. Les circuits à l'électrode et à la piéce sont sous tension quand la machine à souder est en marche. Eviter toujours tout contact entre les parties sous tension et la peau nue ou les vétements mouillés. Porter des gants secs et sans trous pour isoler les mains.
   b. Faire trés attention de bien s'isoler de la masse quand on soude dans des endroits humides, ou sur un plancher metallique ou des grilles metalliques, principalement dans les positions assis ou couché pour lesquelles une grande partie du corps peut être en contact avec la masse.
   c. Maintenir le porte-électrode, la pince de masse, le câble de soudage et la machine à souder en bon et sûr état defonctionnement.
   d. Ne jamais plonger le porte-électrode dans l'eau pour le refroidir.
   e. Ne jamais toucher simultanément les parties sous tension des porte-électrodes connectés à deux machines à souder parce que la tension entre les deux pinces peut être le total de la tension à vide des deux machines.
   f. Si on utilise la machine à souder comme une source de courant pour soudage semi-automatique, ces precautions pour le porte-électrode s'applicuent aussi au pistolet de soudage.

2. Dans le cas de travail au dessus du niveau du sol, se protéger contre les chutes dans le cas ou on recoit un choc. Ne jamais enrouler le câble-électrode autour de n'importe quelle partie du corps.

3. Un coup d'arc peut être plus sévère qu'un coup de soliel, donc:

   a. Utiliser un bon masque avec un verre filtrant approprié ainsi qu'un verre blanc afin de se protéger les yeux du rayonnement de l'arc et des projections quand on soude ou quand on regarde l'arc.
   b. Porter des vêtements convenables afin de protéger la peau de soudeur et des aides contre le rayonnement de l'arc.
   c. Protéger l'autre personnel travaillant à proximité au soudage à l'aide d'écrans appropriés et non-inflammables.

4. Des gouttes de laitier en fusion sont émises de l'arc de soudage. Se protéger avec des vêtements de protection libres de l'huile, tels que les gants en cuir, chemise épaisse, pantalons sans revers, et chaussures montantes.

5. Toujours porter des lunettes de sécurité dans la zone de soudage. Utiliser des lunettes avec écrans lateraux dans les zones où l'on pique le laitier.

6. Eloigner les matériaux inflammables ou les recouvrir afin de prévenir tout risque d'incendie dû aux étincelles.

7. Quand on ne soude pas, poser la pince à une endroit isolé de la masse. Un court-circuit accidental peut provoquer un échauffement et un risque d'incendie.

8. S'assurer que la masse est connectée le plus prés possible de la zone de travail qu'il est pratique de le faire. Si on place la masse sur la charpente de la construction ou d'autres endroits éloignés de la zone de travail, on augmente le risque de voir passer le courant de soudage par les chaines de levage, câbles de grue, ou autres circuits. Cela peut provoquer des risques d'incendie ou d'echauffement des chaines et des câbles jusqu'à ce qu'ils se rompent.

9. Assurer une ventilation suffisante dans la zone de soudage. Ceci est particuliérement important pour le soudage de tôles galvanisées plombées, ou cadmiées ou tout autre métal qui produit des fumeés toxiques.

10. Ne pas souder en présence de vapeurs de chlore provenant d'opérations de dégraissage, nettoyage ou pistolage. La chaleur ou les rayons de l'arc peuvent réagir avec les vapeurs du solvant pour produire du phosgéne (gas fortement toxique) ou autres produits irritants.

11. Pour obtenir de plus amples renseignements sur la sûreté, voir le code "Code for safety in welding and cutting" CSA Standard W 117.2-1974.

PRÉCAUTIONS DE SÛRETÉ POUR LES MACHINES À SOUDER À TRANSFORMATEUR ET À REDRESSEUR

1. Relier à la terre le chassis du poste conformement au code de l'électricité et aux recommendations du fabricant. Le dispositif de montage ou la piece à souder doit être branché à une bonne mise à la terre.

2. Autant que possible, l'installation et l'entretien du poste seront effectués par un électricien qualifié.

3. Avant de faires des travaux à l'interieur de poste, la debrancher à l'interrupteur à la boite de fusibles.

4. Garder tous les couvercles et dispositifs de sûreté à leur place.

Thank You

— for selecting a **QUALITY** product by Lincoln Electric. We want you to take pride in operating this Lincoln Electric Company product ••• as much pride as we have in bringing this product to you!

CUSTOMER ASSISTANCE POLICY

The business of The Lincoln Electric Company is manufacturing and selling high quality welding equipment, consumables, and cutting equipment. Our challenge is to meet the needs of our customers and to exceed their expectations. On occasion, purchasers may ask Lincoln Electric for advice or information about their use of our products. We respond to our customers based on the best information in our possession at that time. Lincoln Electric is not in a position to warrant or guarantee such advice, and assumes no liability, with respect to such information or advice. We expressly disclaim any warranty of any kind, including any warranty of fitness for any customer's particular purpose, with respect to such information or advice. As a matter of practical consideration, we also cannot assume any responsibility for updating or correcting any such information or advice once it has been given, nor does the provision of information or advice create, expand or alter any warranty with respect to the sale of our products.

Lincoln Electric is a responsive manufacturer, but the selection and use of specific products sold by Lincoln Electric is solely within the control of, and remains the sole responsibility of the customer. Many variables beyond the control of Lincoln Electric affect the results obtained in applying these types of fabrication methods and service requirements.

Subject to Change – This information is accurate to the best of our knowledge at the time of printing. Please refer to www.lincolnelectric.com for any updated information.

Please Examine Carton and Equipment For Damage Immediately

When this equipment is shipped, title passes to the purchaser upon receipt by the carrier. Consequently, Claims for material damaged in shipment must be made by the purchaser against the transportation company at the time the shipment is received.

Please record your equipment identification information below for future reference. This information can be found on your machine nameplate.

Product _____

Model Number _____

Code Number or Date Code_____

Serial Number_____

Date Purchased_____

Where Purchased_____

Whenever you request replacement parts or information on this equipment, always supply the information you have recorded above. The code number is especially important when identifying the correct replacement parts.

On-Line Product Registration

- Register your machine with Lincoln Electric either via fax or over the Internet.
  - For faxing: Complete the form on the back of the warranty statement included in the literature packet accompanying this machine and fax the form per the instructions printed on it.
  - For On-Line Registration: Go to our **WEB SITE at www.lincolnelectric.com.** Choose "Quick Links" and then "Product Registration". Please complete the form and submit your registration.

Read this Operators Manual completely before attempting to use this equipment. Save this manual and keep it handy for quick reference. Pay particular attention to the safety instructions we have provided for your protection. The level of seriousness to be applied to each is explained below:

⚠ WARNING

This statement appears where the information **must** be followed **exactly** to avoid **serious personal injury** or **loss of life**.

⚠ CAUTION

This statement appears where the information **must** be followed to avoid **minor personal injury** or **damage to this equipment**.

LINCOLN® ELECTRIC

TABLE OF CONTENTS

Page

Installation .....Section A
Technical Specifications A-1
Safety Precautions A-2
Correct Operational use A-2
Stacking and Lifting A-2
Input Power Connections A-2
Output Connections A-3
Installation of Field Installed Options A-3
K843 Amptrol Installation Instructions A-4
Installation of Equipment Requied for Recommended Processes.....A-5 Thru A-6

Operational .....Section B
Safety Precautions.....B-1
Meaning of Graphic Symbols.....B-1 thru B-3
General Machine Description B-4
Recommended Processes & Equipment B-4
Operational Features and Control B-4
Power Source Operation and Controls .....B-5 thru B-7
Auxiliary Power Connections B-8
Solid State Output Control B-8
Case Features.....B-8
Stick Welding B-9
Paralleling B-9
Machine & Circuit Protection B-9

Accessories .....Section C
TIG Welding Options / Accessories.....C-1
Optional Equipment .....C-1 thru C-2

Maintenance .....Section D
Safety Precautions D-1
Routine Maintenance.....D-1

Troubleshooting .....Section E
Safety Precautions.....E-1
How to Use Troubleshooting Guide.....E-1
Troubleshooting Guide.....E-2 thru E-5
Procedure for Replacing P.C. Boards E-6, E-7

Wiring Diagrams .....Section F

Parts Pages P-234, P-239

TECHNICAL SPECIFICATIONS – DC-400

INPUT-THREE PHASE ONLY

Standard Voltage Frequency	Input Current at Rated Output (CVI)		
	100% Duty Cycle	60% Duty Cycle	50% Duty Cycle
230/460/575V/60Hz	400Amps/36V 78/39/31Amps	450Amps/38V 83/41/33Amps	500Amps/40V 84/42/34Amps
220/230/380/400/415/440V/50/60Hz	400Amps/36V 81/77/47/45/43/41Amps	450Amps/38V 85/81/49/47/45/42Amps	500Amps/40V 86/82/50/48/46/43Amps

RATED OUTPUT

Duty Cycle (1)	Amps	Volts at Rated Amps
100% 60% 50%	400 450 500	36 38 40

OUTPUT

OUTPUT	MAXIMUM OPEN CIRCUIT VOLTAGE	AUXILIARY POWER
Min.----60A 12V CV(22V CC) Max.---500A 42V (CC, CV)	57V. (CC) 45.5V. (CVI) 60Hz 54V. (CC) 45.5V. (CVI) 50/60 Hz	115 VAC, 15 AMPS 42 VAC, 10 AMPS

RECOMMENDED INPUT WIRE AND FUSE SIZES FOR MAXIMUM RATED OUTPUT. IN ADDITION, FOLLOW LATEST NATIONAL ELECTRICAL CODE AND LOCAL CODE.

INPUT VOLTAGE / FREQUENCY	INPUT AMPERE RATING ON NAMEPLATE @100% Duty Cycle	TYPE 75°C COPPER WIRE IN CONDUIT AWG (IEC) SIZES (mm^2) 40°C(104°F)	TYPE 75°C GROUND WIRE IN CONDUIT AWG (IEC) SIZES (mm^2)	BUSSMANN SUPER LAG FUSE SIZE AND CATALOG NUMBER*	
				FUSE SIZE	CATALOG NUMBER
230/60Hz 460/60Hz 575/60Hz	78 39 31	3(25) 8(10) 10(6)	6(16) 10(6) 10(6)	100 50 40	REN-100 RES-50 RES-40
220/50/60Hz 230/50/60Hz 380/50/60Hz 400/50/60Hz 415/50/60Hz 440/50/60Hz	81 77 47 45 43 41	3(25) 3(25) 6(16) 6(16) 8(10) 8(10)	8(10) 8(10) 10(6) 10(6) 10(6) 10(6)	100 100 60 60 60 50	REN-100 REN-100 RES-60 RES-60 RES-60 RES-50

PHYSICAL DIMENSIONS

HEIGHT	WIDTH	DEPTH	WEIGHT
27.50 in. 699 mm	22.25 in. 565 mm	32.0 in. 988 mm	473 lbs. 215 kg.

TEMPERATURE RANGES

OPERATING TEMPERATURE RANGE	STORAGE TEMPERATURE RANGE
-22°F to 104°F(-30°C +40°C)	-40°F to 140°F(-40°C+60°C)

(1) Based upon 10 minute time period (i.e., for 60% duty cycle, it is 6 minutes on an 4 minutes off).

* **Use only Bussmann Super-Lag fuses specified. Other fuses may not protect the welder and may cause overheating and possible fire damage.**

Insulation class 155(F)

SAFETY PRECAUTIONS

⚠ WARNING

ELECTRIC SHOCK can kill.
- **Do not touch electrically live parts or electrode with skin or wet clothing.**
- **Insulate yourself from work and ground.**
- **Always wear dry insulating gloves.**

FUMES AND GASES can be dangerous.
- **Keep your head out of fumes.**
- **Use ventilation or exhaust to remove fumes from breathing zone.**

WELDING SPARKS can cause fire or explosion.
- **Keep flammable material away.**
- **Do not weld on closed containers.**

ARC RAYS can burn eyes and skin.
- **Wear eye, ear and body protection.**

See additional warning information at front of this operator's manual.

CORRECT OPERATIONAL USE

The machine should be located in a clean dry place where there is free circulation of clean air such that air movement in through the front and out through the back will not be restricted. Dirt and dust that can be drawn into the machine should be kept to a minimum. Failure to observe these precautions can result in excessive operating temperatures and nuisance shutdown of the machine.

LIMIT ON STACKING

⚠ WARNING

FALLING EQUIPMENT can cause injury.
- **Do not lift this machine using lift bale if it is equipped with a heavy accessory such as trailer or gas cylinder.**
- **Lift only with equipment of adequate lifting capacity.**
- **Be sure machine is stable when lifting.**
- **Do not stack more than three high.**
- **Do not stack the DC-400 on top of any other machine.**

The units may be stacked three high by observing the following safety precautions:

A. Make sure the first or bottom unit is setting on a level, well supported surface.

B. The units must be stacked with their fronts flush, making sure the two holes in the base rails of the unit being stacked on top are over the two pins located on the top front corners of the unit it is being stacked on.

Input Power Connections

By removing the rear access panel the three phase input power is connected to the three line terminals on the input contactor, and the earth grounding lead to the grounding terminal on the input box floor marked with the ⏚ symbol. Install and reconnect panel for the proper input voltage per the diagram pasted inside the access panel cover.

See **Technical Specification** Page:

CAUTION

* **Failure to follow these instructions can cause immediate failure of components within the machine.**
* **When powering welder from a generator be sure to turn off the welder first, before generator is shut down in order to prevent damage to welder.**

Output Cable Connections

The output leads are connected to the output terminals marked "**+**" and "**-**". They are located at the lower right and lower left corners of the front panel.

Output Cables

CABLE SIZES FOR COMBINED LENGTH OF ELECTRODE AND WORK CABLE

CABLE LENGTHS	MACHINE LOAD 400A (100% DUTY CYCLE)	MACHINE LOAD 500A (50% DUTY CYCLE)
UP TO 50 ft (15m)	3/0 85 mm²	2/0 67 mm²
50 to 100 ft (15-30 m)	3/0 85 mm²	2/0 67 mm²
100-150 ft (30-46 m)	3/0 85 mm²	3/0 85 mm²
150-200 ft (46-61 m)	3/0 85 mm²	3/0 85 mm²
200-250 ft (67-76 m)	4/0 107 mm²	4/0 107 mm²

INSTALLATION OF FIELD INSTALLED OPTIONS

Remote Output Control (K857 or K857-1 with K864 Adapter)

An optional "remote out control" is available. The K857 or K857-1 are the same remote control options that are used on other Lincoln power sources. The K857 or K857-1 consist of a control box with 25 feet (7.6 meters) or 100 feet (30.3 meters).

The K857 and K857-1 have a 6-pin connector and K857 require a K864 adapter cable which connects to the 14-pin connector on the case front.

REMOTE CONTROL ADAPTER CABLE (K864)

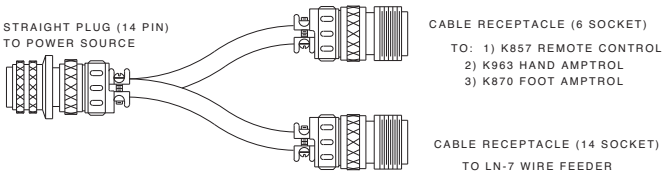

A "V" cable 12" (.30m) long to connect a K857 Remote Control (6 pin connector) with a wire-feeder (14-pin connector) and the machine (14-pin connector). If a remote control is used alone the wire-feeder connection is then not used.

WARNING

ELECTRIC SHOCK can kill.

* **Turn the power switch of the welding power source "OFF" before installing plugs on cables or when connecting or disconnecting plugs to welding power source.**

AMPTROL ADAPTER CABLE (843)

A five wire cable, 12" (.30m) long, used for easy connection of standard K963 Hand Amptrol or K870 Foot amptrol. The cable has a 6-pin MS-style connector which connects to the Amptrol and terminals which connect to 75, 76, and 77 on the machine terminal strip and to the case grounding screw. the Amptrol will control the same range of output as the current control on the welder. (if a smaller range of control is desired for finer adjustment, a K775 Remote may be used in conjunction with the Amptrol Adapter Cable Kit.) The Amptrol arc start switch is nonfunctional unless used with a K799 Hi-Frequency Kit.

See Amptrol Adapter installation Instructions on next page.

K843 AMPTROL™ ADAPTER INSTALLATION INSTRUCTIONS

For use with: DC-250, DC-400, R3R or Weldanpower 250 (D-10 and Pro) with remote control power sources.

WARNING: TURN THE POWER SOURCE OFF BEFORE INSTALLATION

This K843 adapter is used to connect AMPTROL™ (K963*, K813* or K870), remote control (K775), and HI-FREQ™ (K799) accessories to DC-250, DC-400, R3R or Weldanpower 250 (D-10 and Pro) with remote control power sources.

The power source "machine/remote" switch must be in "remote" for Amptrol™ to control current. Accessories may be combined and connected in four different ways, as shown below.

AMPTROL™ ONLY

The Amptrol™ provides remote current control through the full range of the power source.

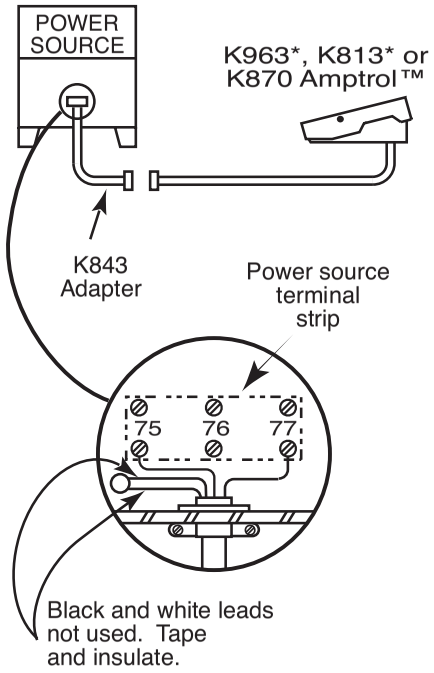

FIG. 1

AMPTROL™ PLUS REMOTE LIMIT CONTROL

The Amptrol™ provides remote current control from the minimum of the power source to a maximum set by the remote limit control.

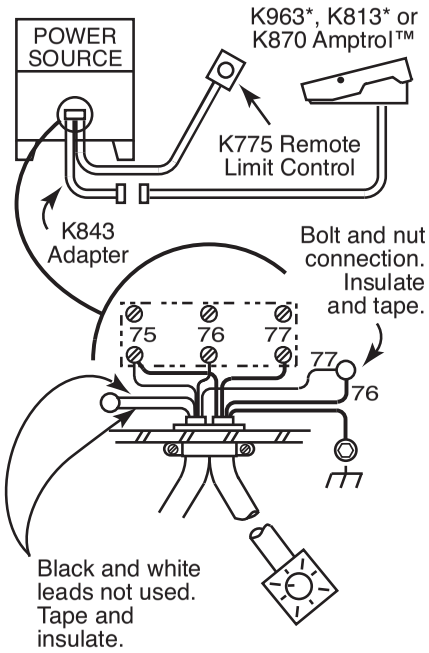

FIG. 2

AMPTROL™ AND HI-FREQ.™ KIT

The Amptrol™ will start the Hi-Freq™ kit to turn on gas and high frequency starting for DC TIG welding. The Amptrol™ controls current through the full range of the power source.

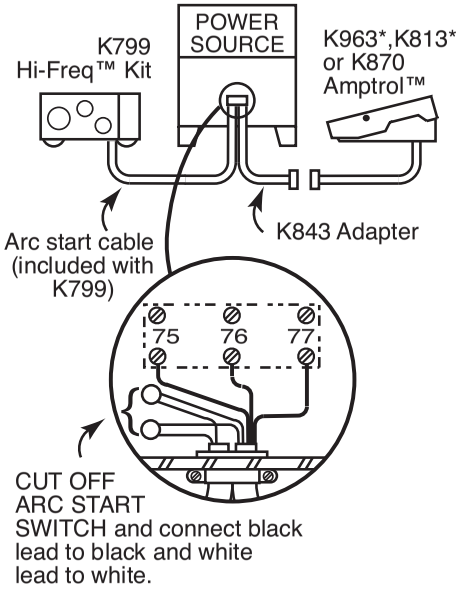

FIG. 3

AMPTROL™ AND HI-FREQ.™ KIT PLUS REMOTE LIMIT CONTROL

The Amptrol™ switch will start the Hi-Freq™ kit to turn on gas and high frequency starting for DC TIG welding. The Amptrol™ controls current from the minimum of the power source to a maximum set by the remote limit control.

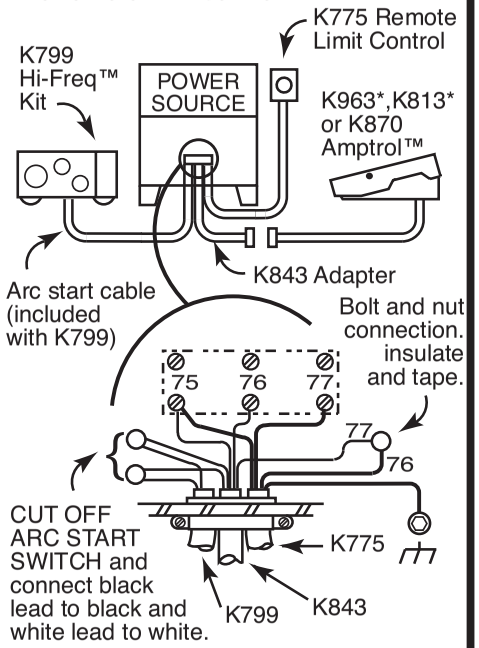

FIG. 4

INSTALLATION OF EQUIPMENT REQUIRED FOR RECOMMENDED PROCESSES

WIRE FEEDER CONTROL CABLE CONNECTIONS

For control cable with 14-pin connector:

Connect control cable to 14-pin connector on the front panel of the machine. See the appropriate connection diagram for the exact instructions for the wire feeder being used. Refer to Section 2.4.1 for connector pin functions.

For control cable with terminal strip connectors:

The control cable from the wire feeding equipment is connected to the terminal strips behind the control panel*. A strain relief box connector is provided for access into the terminal strip section. A chassis ground screw is also provided below the terminal strip marked with the symbol ⏚ for connecting the automatic equipment grounding wire. See the appropriate connection diagram for the exact instructions for the wire feeder being used.

A cover (Lincoln Electric Part Number S17062-3) is available for the unused 14-pin connector to protect it against dirt and moisture.

* See Terminal Strip Connections section for access to the terminal strips.

CONNECTION OF DC-400 TO LN-22 OR LN-25

a) Turn off all power.

b) Place output terminals switch into the “ON” position.

c) Connect the electrode cable to the output terminal of polarity required by electrode. Connect the work lead to the other terminal.

d) Place the OUTPUT CONTROL Switch at “LOCAL” position unless a Remote Control is connected to the DC-400.

e) Place MODE SWITCH in “CONSTANT VOLTAGE (FCAW, GMAW)”.

NOTE: The output terminals are energized at all times.

MULTIPROCESS SWITCH CONNECTION AND OPERATION

PURPOSE

A Multiprocess Switch has been designed for use with the DC-400 or DC-600. With this switch installed on the DC-400, it permits easy changing of the polarity of the wire feed unit connected and also provides separate terminals for connection of stick or air carbon arc. The Multiprocess Switch is available as either a factory installed or field installed option.

NOTE: IF THE DC-400 IS TO BE USED FOR BOTH SEMIAUTOMATIC/AUTOMATIC AND STICK/AIR CARBON ARC, THEN A MULTIPROCESS SWITCH IS REQUIRED.

DESIGN

The Multiprocess Switch consists of a 3-position switch assembly that is mounted in a sheet metal enclosure that has two output terminals on each end of the box. The two terminals on the left side of the box are for connection of wire feed electrode and work leads. The two terminals on the right side of the box are for connection of work and electrode for stick or air carbon arc. The output terminals are protected against accidental contact by hinged covers.

The switch mounts to the front of the DC-400 by means of a bracket that fastens to the case sides. Two 4/0 (107 mm^2) leads connect the switch assembly to each output stud.

CONNECTIONS

1. Connect wire feed unit electrode and work cables through the rectangular strain relief holes in the base of the DC-400 to the output studs on the left side of the box.

2. Connect wire feeder control cable and make other terminal strip connections as specified on the connection diagram for the Lincoln wire feeder being used. “Electrode” and “Work” are connected to the left side of the Multiprocess Switch.

3. Connect stick or air carbon arc electrode and work cables through the rectangular strain relief holes in the base of the DC-400 to the output studs on the right side of the box.

OPERATION

The operation of the switch is as follows:

A semiautomatic or automatic wire feed unit electrode and work cables are connected to the terminals on the left side of the box. Stick or air carbon arc electrode and work leads are connected to the terminals on the right side of the box. There are three positions on the switch. With the switch in the left position, the wire feed terminals are electrode negative. In the center position, the wire feeder terminals are electrode positive. In both the left and center switch position, the right side stick terminals are disconnected. In the right switch position, the wire feed terminals are disconnected from the DC-400 and the stick terminals connected. The polarity of the stick terminals is marked on the end of the box. To change polarity, the electrode and work leads must be interchanged. In the stick position, the stick terminals are energized at all times.

CONNECTIONS

(For those applications where it is <u>not</u> necessary to have separate work cables for stick and semiautomatic welding.)

If both stick and semiautomatic welding is done on the same workpiece, only one work lead is required. To do this, connect a 4/0 (107 mm^2) jumper from the work terminal on the semiautomatic side to the terminal to be used for work on the stick side. The work lead from the semiautomatic side then serves as the work lead for both semiautomatic and stick welding.

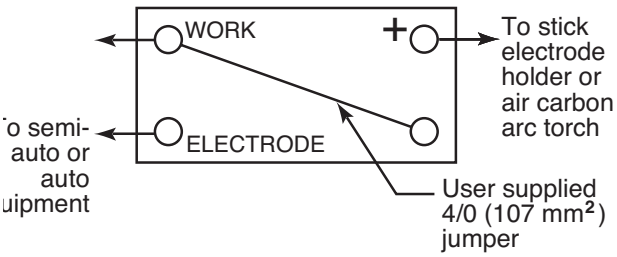

MULTIPROCESS SWITCH

To change stick polarity, reverse the leads at the (+) and (-) terminals on the right side of the Multiprocess Switch.

NOTE: When a DC-400 equipped with Multiprocess Switch is mounted on an undercarriage, the undercarriage handle in the resting position can hit the case of the Multiprocess Switch. This does no harm, but if the user desires, a 1/4" or 3/8" bolt and nut may be placed in the hole in the undercarriage tow bar to limit the travel of the undercarriage handle.

STICK, TIG OR AIR/CARBON ARC *

a) Turn off all power.

b) Disconnect all wire feed unit control, electrode, and work leads.

c) Place MODE SWITCH in the "CONSTANT CURRENT (STICK/TIG)" for air carbon arc.

d) For stick, TIG or air carbon arc, place OUTPUT TERMINALS switch into the "ON" position. With the DC-400 connected for stick, TIG or air carbon arc welding, the output terminals will be energized at all times.

***NOTE:** If stick welding, TIG welding or air carbon arc cutting is to be done on the DC-400 along with semi-automatic/automatic welding, then a K804-1 Multiprocess Switch is required. If the Multiprocess Switch is not used, then all control, electrode, and work leads to wire feed equipment <u>must</u> be disconnected from the DC-400 <u>before</u> connecting the DC-400 for stick or air carbon arc cutting.

SAFETY PRECAUTIONS

⚠ WARNING

ELECTRIC SHOCK can kill.

- **Have an electrician install and service this equipment.**
- **Turn the input power off at the fuse box before working on equipment.**
- **Do not touch electrically hot parts.**
- **This next section applies to DC-400's without the Capacitor Discharge Option:**

When using a DC-400 power source with wire feeders which do not have an electrical trigger interlock (or with wire feeders with the electrical trigger interlock in the OFF position), there will be a small spark if the electrode contacts the work or ground within several seconds after releasing the trigger.

When used with some wire feeders with the electrical trigger interlock in the ON position, the arc can restart if the electrode touches the work or ground during these several seconds.

⚠ WARNING

- Be sure to select OUTPUT TERMINALS "REMOTE ON/OFF" for operation with wire feeders that have leads numbered 2 and 4.

MEANINGS OF GRAPHIC SYMBOLS

The DC-400 nameplate has been redesigned to use international symbols in describing the function of the various components. Below are the symbols used.

POWER ON-OFF SWITCH

Input (Power)

On

Off

OUTPUT CONTROL DIAL

Output (Control)

Increase/Decrease of Output (Voltage or Current)

OUTPUT CONTROL "LOCAL-REMOTE" SWITCH

Remote Output Voltage or Current Control

Local Output Voltage or Current Control

CIRCUIT BREAKER

Circuit Breaker

THERMAL PROTECTION LIGHT

High Temperature

ARC CONTROL SWITCH

Gas Metal Arc Welding

Increase/Decrease of Inductance

Low Inductance

High Inductance

OUTPUT TERMINALS SWITCH

Output (Voltage)

On

Remote On/Off

ARC FORCE CONTROL DIAL

Shielded Metal Arc Welding

Gas Tungsten Arc Welding

Arc Force Current

Increase/Decrease of Current

VOLTMETER SWITCH

Voltmeter

Positive Electrode

Negative Electrode

EARTH GROUND CONNECTION

Signifying the Earth (Ground) Connection

RATING PLATE

Three Phase Power

Transformer

Rectifier

Rectified DC Output

Constant Voltage Characteristic

MODE SWITCH

Do not switch if output voltage or current is present.

Constant Voltage (Submerged Arc Welding)

Constant Voltage (Flux cored arc weldin,gas metal arc welding).

Constant Current (shield metal arc welding, gas tungsten arc welding).

RATING PLATE (Continued)

NEMA EW 1	Designates welder complies with National Electrical Manufacturers Association requirements EW 1. (Export Model only)
IEC 60974-1	Designates welder complies with International Electrotechnical Commission requirements 60974-1. (European model only)
3 ∿	Three Phase Power
	Transformer
	Rectifier
	Rectified DC Output
	Constant Voltage Characteristic
	Constant Current Characteristic
	Line Connection
	Shielded Metal Arc Welding
	Flux Cored Arc Welding
	Submerged Arc Welding
S	Designates Welder can be used in environments with increased hazard of electric shock. (IEC model only)
IP21	Degree of protection provided by the enclosure
CE	Designates welder complies with low voltage directive and with EMC directive. (Export Model only)

GENERAL MACHINE DESCRIPTION

The DC-400 is an SCR controlled three phase DC power source. It is designed with a single range potentiometer control.

RECOMMENDED PROCESSES & EQUIPMENT

The DC-400 model is designed for all open arc processes including Innershield® and GMAW all solid wire and gas procedures within the capacity of the machine, plus the capability of stick and TIG welding and air carbon arc gouging up to 5/16" (8mm) diameter. A mode switch selects CV (FCAW, GMAW), CV Submerged Arc, or CC (Stick/TIG). Stick welding performance is similar to that of the R3R-500.

The DC-400 is designed to be used with the LN-7, LN-7 GMA, LN-8, LN-9, LN-9 GMA, LN-23P, LN-25, or LN-742 semiautomatic wire feeders, the NA-3, NA-5 and NA-5R automatics, and the LT-56 and LT-7 tractors, within the 400 ampere capacity of the machine. The DC-400 Diode Kit option is required to utilize the cold start and cold electrode sensing features of the NA-3, NA-5 and NA-5R.

OPERATIONAL FEATURES & CONTROLS

ARC CHARACTERISTICS

Through the unique combination of the transformer, three phase semiconverter rectifier, capacitor bank, arc control choke, and the solid state control system, outstanding arc characteristics are achieved on constant voltage.

In addition, an arc force control enables the DC-400 to stick weld as well as the R3R-500.

OUTPUT CONTROL

The OUTPUT control, a small 2 watt potentiometer, is calibrated from 1 to 10. The OUTPUT control serves as a voltage control in the CV position and a current control in the CC position.

MACHINE OUTPUT CONTROL SWITCH "LOCAL" OR "REMOTE"

The machine output can be controlled by either the OUTPUT control on the machine control panel, the output control on the wire feed unit, or an optional "remote control" that is available. This switch selects the mode of control, either "LOCAL" or "REMOTE".

OUTPUT TERMINALS "ON" OR OUTPUT TERMINALS "REMOTE"

This switch provides an alternative to the "2 to 4" jumpering function by energizing the machine's output regardless of whether "2 or 4" is jumpered or not.

POLARITY SELECTION

Polarity selection is made by appropriately connecting the electrode and work welding cables to either the "**+**" stud or to the "**-**" stud. Select "VOLTMETER" switch for "**+**" or "**-**" electrode, for the remote (#21) work sensing lead.

VOLTMETER SWITCH "+" ELECTRODE OR "-" ELECTRODE

This switch selects electrode polarity for the remote (#21) work sensing lead of automatic or semiautomatic equipment.

115 VOLT POWER SWITCH

The power input contactor operates from an auxiliary 115 volt transformer that is energized through the POWER toggle switch on the machine control panel. " I " is on and "0" is off.

PILOT LIGHT

A white light on the machine control panel indicates when the power source input contactor is closed. This means the main power transformer and all auxiliary and control transformers are energized.

THERMAL PROTECTION LIGHT

An amber light on the machine control panel indicates when either of the two protective thermostats have opened. Output power will be removed but input power will still be applied to the machine.

INPUT CONTACTOR

The power source is equipped with an input contactor.

POWER SOURCE OPERATION AND CONTROLS

⚠ WARNING

ELECTRIC SHOCK can kill.

- **Have an electrician install and service this equipment.**
- **Turn the input power off at the fuse box before working on equipment.**
- **Do not touch electrically hot parts.**

Duty Cycle and Time Period

The DC-400 is rated at the following duty cycles:

DUTY CYCLE *	AMPS	VOLTS
100%	400	36
60%	450	38
50%	500	40

* Based upon 10 minute time period (i.e., for 60% duty cycle, it is 6 minutes on and 4 minutes off).

Overloading the DC-400 may result in opening of an internal protective thermostat as indicated by the amber thermal protection light turning on.

STARTING THE MACHINE

The POWER toggle switch at the extreme right side of the control panel in the "**I**" position energizes and closes the three phase input contactor from a 115 volt auxiliary transformer. This in turn energizes the main power transformer.

The machine is de-energized when the POWER switch is in the "**0**" position.

The white light below the POWER switch indicates when the input contactor is energized.

OUTPUT CONTROL DIAL

The OUTPUT control to the right of the center of the control panel is a continuous control of the machine output. The control may be rotated from minimum to maximum while under load to adjust the machine output.

The machine is equipped with line voltage compensation as a standard feature. This will hold the output constant except at maximum output of the machine, through a fluctuation of ±10% input line voltage.

OUTPUT CONTROL "LOCAL-REMOTE" SWITCH©

The OUTPUT CONTROL toggle switch on the control panel labeled "LOCAL-REMOTE" gives the operator the option of controlling the output at the machine control panel or at a remote station. For remote control, the toggle switch is set in the "REMOTE" position and controlled at the wire feed unit control, or by connecting a K775 control to terminals 75, 76, and 77 on the terminal strip at the front of the machine, or by connecting a K857 control to the 14-pin connector on the front of the machine. For control at the machine control panel, the toggle switch is set in the "LOCAL".

(Exception: When used with an LN-9, LN-9 GMA or NA-5 wire feeder, the OUTPUT CONTROL switch must be in the "REMOTE" position or automatic shutdown of the LN-9 or NA-5 may occur.)

POLARITY SELECTION

Polarity selection is made by appropriately connecting the electrode and work welding cables to either the "**+**" stud or to the "**-**" stud. Select "VOLTMETER" switch for "**+**" or "**-**" electrode for the remote (#21) work sensing lead.

VOLTMETER SWITCH

Select "+" for positive electrode or "-" for negative electrode polarity for the remote (#21) work sensing lead of automatic or semiautomatic equipment.

THERMAL PROTECTION LIGHT

The amber thermal protection light will be lit if either of the two protective thermostats have opened. The output power will be disabled but input power will still be applied to the welder. (Refer to Machine and Circuit Protection section).

MODE SWITCH

The large MODE SWITCH on the left side of the machine, labeled "Constant Voltage (Submerged Arc), Constant Voltage (FCAW/GMAW) and Constant Current (Stick/TIG)", is used to select the proper welder characteristics for the process being used.

The CV (FCAW/GMAW) Mode permits the DC-400 to produce essentially a flat output characteristic that can be varied from approx. 12 to 42 volts.

In this position, the dynamic characteristics of the machine under welding conditions provide optimum welding characteristics for Innershield® welding, other open arc processes including short arc MIG welding, and air carbon arc. Most submerged arc welding can also be done in this mode.

The CV (Submerged Arc) Mode also produces an essentially flat output characteristic that can be varied from approximately 12 to 42 volts. The dynamic characteristics of the CV Submerged Arc Mode make possible improved submerged arc welding over that possible using the Constant Voltage Innershield Mode. The improvement is most noticeable on high deposition, slow travel speed welds.

There are no means provided to switch between any of the modes remotely. Do not change the position of the MODE SWITCH if output voltage or current is present as this may damage the switch.

The CC Mode permits the DC-400 to produce a constant current output characteristic through the range of 60-500 amps with an open circuit voltage of approximately 57 volts (54V on 50/60 Hz). Stick welding and TIG are done with this position of the Mode Switch.

ARC FORCE CONTROL DIAL (Effective only in CC mode)

The ARC FORCE control is calibrated from one to ten. For most welding, the dial should be set at approximately midrange, 5-6. Adjustments up or down can then be made depending on the electrode, procedures, and operator preference. Lower settings will provide less short circuit current and a softer arc. A setting that is too low may cause the electrode to stick in the puddle. Higher settings will provide a higher short circuit current and a more forceful arc. Excessive spatter may result if the control setting is too high. For most TIG welding applications adjust this control to a minimum for best operating characteristics.

ARC CONTROL SWITCH (Effective only in CV FCAW/GMAW mode)

The ARC CONTROL is a tapped switch numbered from 1 to 5 and changes the pinch effect of the arc. This control is most useful in processes that utilize a "shorting" metal transfer and controls the spatter, fluidity, and bead shape. The pinch effect is increased by turning the control clockwise.

For all applications, a good starting point for the ARC CONTROL is a midrange dial setting of 3. The control can be increased or decreased as desired.

OUTPUT TERMINALS SWITCH

The OUTPUT TERMINALS toggle switch on the control panel labeled "REMOTE - ON" allows the welder output to be activated remotely or to be always on. For remote operation, the toggle switch is set in "REMOTE" position and the welder output will be activated when 2 and 4 are closed when using a wire-feeder. For welder output to always be activated, set the switch to the "ON" position.

110-115V AC and 40-42V AC Auxiliary Power and Control Connections

14-PIN CONNECTOR

The 14-pin connector receptacle supplies auxiliary power.

40-42V AC is available at receptacle pins I and K. A 10 amp circuit breaker protects this circuit.

On the Domestic and Export models 110-115V AC is available at receptacle pins A and J. A 10 amp circuit breaker protects this circuit. Note that the 40-42V AC and 110-115V AC circuits are electrically isolated from each other.

FRONT VIEW OF 14-PIN CONNECTOR RECEPTACLE

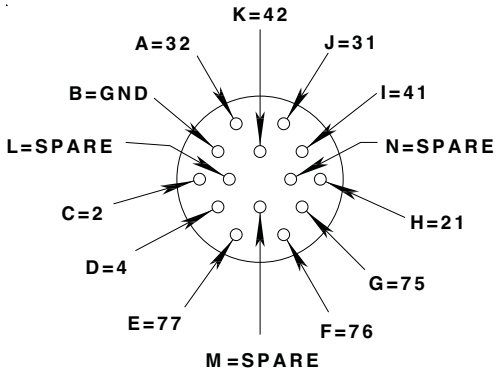

PIN	LEAD NO.	FUNCTION
A	32	110 - 115V AC (Domestic & Export)
B	GND	CHASSIS CONNECTION
C	2	TRIGGER CIRCUIT
D	4	TRIGGER CIRCUIT
E	77	OUTPUT CONTROL
F	76	OUTPUT CONTROL
G	75	OUTPUT CONTROL
H	21	WORK CONNECTION
I	41	40-42V AC
J	31	110-115V AC (Domestic & Export)
K	42	40-42V AC
L	---	---
M	---	---
N	---	---

Terminal Strip Connections

Terminal strip TS2 located behind the hinged control panel on the front of the power source supplies 110-115V AC. A 10 amp circuit breaker protects this circuit. Note that this 110-115V AC is also available in the 14-pin connector on the Domestic and Export models.

To gain access to the terminal strips simply remote the six #10 sheet metal screws from the perimeter of the welder nameplate as shown below. Tilt panel forward so it rests in a horizontal position. See Table showing Front View of 14-Pin Connector Receptacle for lead number functions.

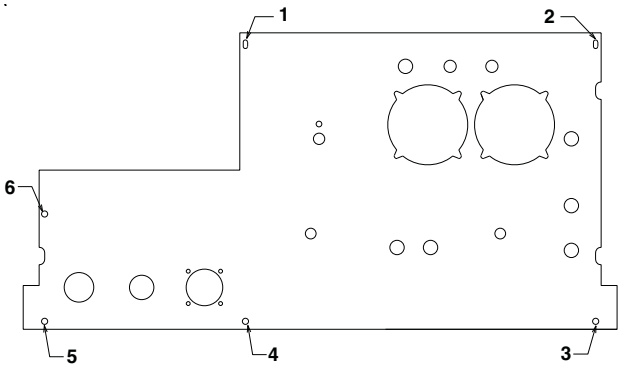

230V AC Auxiliary Power for Water Cooler (European and Export models)

A Continental European receptacle is located on the rear panel for supplying 230V AC to a water cooler. A 3.5 amps, (2 amps below code 11277) circuit breaker which is also located on the rear panel protects this circuit from excessive overloads or short circuits.

Machine and Circuit Protection

The power source is thermostatically protected with proximity thermostats against overload or insufficient cooling. One thermostat is located on the nose of the center bottom primary coil and a second thermostat is attached to the lead connection the secondaries. Both thermostats are connected in series with 2-4 circuit. If the machine is overloaded, the primary thermostat will open, the output will be zero, and the amber thermal protection light will be on.
The fan will continue to run. The secondary thermostat will open either with an excessive overload or insufficient cooling. The output will be zero and the amber protection light will be off.

AUXILIARY POWER CONNECTIONS

The power source is equipped to furnish nominally 110-115 volt AC and 40-42 volt AC auxiliary power for operating wire feeding equipment, etc. The auxiliary power is available at the 14-pin MS-style connector receptacle on the control panel and/or at a terminal strip behind the hinged control panel on the front of the power source. 110-115V AC is available at receptacle pins A and J (Domestic and Export models only), and terminals 31 and 32 (all models). 40-42V AC is available only at receptacle pins I and K. The 110-115V AC and the 40-42V AC are isolated circuits and each is protected by a 10 amp circuit breaker.

REMOTE CONTROL CONNECTIONS

Remote control connections are available both at a 14-pin connector receptacle located on the control panel, and on terminal strips with screw connections located behind the hinged control panel on the front of the power source.

OUTPUT CONNECTIONS

The output terminals are recessed on the case front and labeled “+” and “-”.

INPUT CONNECTIONS

The three input lines are brought in through the rear panel of the power source and attached to the input contactor. Removal of the removable access panel makes the contactor accessible for the input cable connections.

INPUT LINE VOLTAGE COMPENSATION

The power source is equipped with input line voltage compensation as standard. For a line voltage fluctuation of ±10% the output will remain essentially constant. This is accomplished through the feedback network in the control circuit.

SOLID STATE OUTPUT CONTROL

The output of the welder is electronically controlled by SCR’s instead of mechanical contactors, providing extra long life for highly repetitive welding applications.

SOLID STATE CONTROL SYSTEM

The control circuitry consists of six basic circuits: (1) the SCR snubber network, (2) the SCR firing circuit, (3) the control/fault protection circuit, (4) the starting circuit, (5) the power-up delay circuit, and (6) the power circuit.

The SCR snubber board consists of a capacitor and resistor connected across each SCR and across the entire bridge and MOV’s to protect the control circuitry and SCR’s from transient voltages. The snubber board is mounted on the back of the case front.

The SCR firing circuit, the control fault protection circuit, the power-up delay circuit, and the power circuit are mounted on the control PC board located behind the front control panel. (The front control panel hinges down for easy access to the board.)
The starting circuit board is located on the back of the control box.

MACHINE COOLING

The fan pulls air in through the louvered front of the machine over the internal parts and exhausts out the louvered rear of the machine. The fan motor is fully enclosed, has sealed ball bearings, requires no lubrication, and operates when the power switch is turned on.

CASE FEATURES

The machine uses a 32” (813mm) long base. The low profile case facilitates installation of the machine under a workbench and stacking the machines three high to conserve floor space.

The case front incorporates a recessed control panel where all the machine controls are mounted. This recessed panel protects the controls and minimizes the possibilities of accidental contact. This control panel can be easily opened to permit access to the enclosed control section which contains the terminal strips, PC board, etc.

The output lead terminals are also recessed to avoid any object or person accidentally coming in contact with an output terminal. Strain relief is provided by holes in the front of the base. The leads are routed up through these holes to the output terminals. This prevents any damage of the output studs or insulation of same in the event the cables are pulled excessively. An output stud cover protects against accidental contact with the output studs. Cover hinges upward for access to the studs.

The individual case sides are removable for easy access for internal service or inspection. These are removable even though the machines are stacked three high.

The case rear, top section, is equipped with a removable access panel. This provides easy access to the input contactor, easy connection and reconnection of input leads, and easy access for service or inspection.

The total construction of the machine permits outdoor operation. The enclosure is designed with air intake louvers that keep dripping water from being drawn into the unit. The transformer, SCR bridge assembly, and choke are double-dipped in a special corrosion resistant coating.

A permanent lifting hook is located at the top of the machine and is positioned so that it acts as nearly as possible through the center of gravity. This lift hook is so positioned that it fits without interference under the base of the second machine when stacking.

ARC FORCE SELECTOR
(Effective only on CC for Stick and TIG Processes)

An ARC FORCE selector is provided similar to that used on the R3R. This control allows the user to select the ideal arc force for the procedure and electrode being used.

ARC CONTROL
(Effective Only When Using CVI Mode)

The ARC CONTROL is a five-position switch that changes the pinch effect of the arc. This results in the control of spatter, fluidity, and bead shape. The ARC CONTROL is set to provide optimum welding depending on the process being used, position, electrode, etc. The pinch effect is increased by turning the control clockwise and may be adjusted while the machine is in operation.

MODE SWITCH

A MODE SWITCH selects between Constant Voltage (FCAW/GMAW), Constant Voltage (Submerged Arc), and Constant Current (Stick/TIG).

STICK WELDING

When the DC-400 is used for stick welding or air carbon arc, the control leads and welding cables to any semiautomatic or automatic wire feeders must be disconnected from the DC-400 for maximum safety (unless the Multiprocess switch option is installed).

PARALLELING

There are no provisions on the DC-400 to permit paralleling.

DIODE OPTION

The DC-400 Diode option is required to utilize the cold start and cold electrode sensing features of the NA-3, NA-5 or NA-5R. When this option is not used with an NA-3, NA-5 or NA-5R, see the DC-400/NA-3, DC-400/NA-5 or DC-400/NA-5R connection diagram for instructions on how to disable this circuit. If the circuit is not disabled, the wire cannot be inched down.

Machine & Circuit Protection (Thermal Protection Light)

The power source is thermostatically protected with proximity thermostats against overload or insufficient cooling. One thermostat is located on the nose of the center bottom primary coil and a second thermostat is attached to the lead connecting the secondaries. Both thermostats are connected in a series with the 2-4 circuit. If the machine is overloaded, the primary thermostat will be open, the output will be zero, and the amber thermal protection light will be on. The fan will continue to run. The secondary thermostat will open either with an excessive overload or insufficient cooling. The output will be zero and the amber protection light will be on. When the thermostats reset the protection light will be off.

The power source is also protected against overloads on the SCR bridge assembly through an electronic protection circuit. This circuit senses an overload on the power source and limits the output to 550 amps by phasing back the SCR's.

Protection is provided to protect the circuitry from accidental grounds. If the customer accidentally "grounds" 75, 76, or 77 to the positive output lead, the DC-400 will be reduced to a low value, thus preventing any damage to the machine. If the ground occurs between 75, 76, 77 and the negative output lead, one of the PC board "self-restoring" fuses will blow, preventing any machine damage.

TIG OPTIONS

TIG MODULE (K930-2)

Docking Kit
Control Cable Extension-45'
Water valve Kit

AMPTROL ADAPTER FOR K799 HI-FREQUENCY KIT (K915-1, REQUIRES K864 ADAPTER)

A "V" cable to connect a K799 Hi-Freq Kit (5-pin connector) with either a K963 Hand Amptrol or a K870 Foot Amptrol (6-pin connector) and the machine. The cable going to the machine has a 6-pin connector which requires a K864 adapter to connect with the 14-pin connector on the DC-400. Refer to S20909 instructions for connection information.

MULTIPROCESS SWITCH (K804-1)

Kit that mounts on the front of the DC-400, and includes hinged covers over its output studs. The switch has three positions: Positive semiautomatic/automatic, negative semiautomatic/automatic, and stick/air carbon arc. Required when using the DC-400 for both semiautomatic/automatic and stick/air carbon arc.

Install per M17137 instructions included with the field installed kit.

CAPACITOR DISCHARGE CIRCUIT (K828-1)

Circuit that mounts inside the DC-400.
Recommended when:

1) DC-400 is used in conjunction with any LN-23P or older LN-8 or LN-9 semiautomatic wire-feeder. Eliminates possible arc flash re-start of weld when trigger interlock is used. Not required with current LN-8 (above Code 8700), or LN-9's with serial numbers above 115187 (manufactured after 12/83), or any LN-9 having an L6043-1 Power PC Board.

2) DC-400 is used with an LN-22 equipped with an older K279 Contactor-Voltage Control Option. Eliminates electrode overrun when gun trigger is released. Not required when later K279 (above Code 8800) is used.

3) DC-400 is used with any semiautomatic wire-feeder and possible small spark, if electrode touches work just after gun trigger is released, is objectionable. Install per M17060 instructions included with the Kit.

UNDERCARRIAGES (K817, K817R, K841)

For easy moving of the machine, optional undercarriages are available with either steel (K817) or rubber tired (K817R) wheels or a platform undercarriage (K841) with mountings for two gas cylinder at rear of welder.

Install per instructions provided with trailer.

OPTIONAL EQUIPMENT

Factory Installed Options

DIODE OPTION

This internally installed option allows the use of the cold start and cold electrode sensing features of the NA-3, NA-5 or NA-5R.

MULTIPROCESS SWITCH

Factory or field installed kit that mounts on the front of the DC-400, and includes hinged covers over its output studs. The switch has three positions: Positive semiautomatic / automatic, negative semiautomatic / automatic, and stick / air carbon arc. Required when using the DC-400 for both semiautomatic/automatic and stick/air carbon arc. The field installed kit equivalent is identified as K804-1. For details on the Multiprocess Switch, see the Installation of Equipment section.

Field Installed Options

REMOTE OUTPUT CONTROL (K857 WITH K864 ADAPTER OR K775)

The K857 has a 6-pin MS-style connector. The K857 requires a K864 adapter cable which connects to the 14-pin connector on the machine.

An optional "remote output control" is available. This is the same remote control that is used on the Lincoln R3R, and DC-600 power sources (K775). The K775 consists of a control box with 28 ft (8.5m) of four conductor cable. This connects to terminals 75, 76, and 77 on the terminal strip and the case grounding screw so marked with the symbol on the machine. These terminals are located behind the control panel on the front of the power source. This control will give the same control as the output control on the machine.

AMPTROL™ ADAPTER CABLE (K843)

A five wire cable, 12" (.30m) long, is available for easy connection of standard K963 Hand Amptrol or K870 Foot Amptrol. The cable has a 6-pin MS-style connector which connects to the Amptrol and terminals which connect to 75, 76 and 77 on the machine terminal strip and to the case grounding screw. The Amptrol will control the same range of output as the current control on the welder. (If a smaller range of control is desired for finer adjustment, a K775 Remote may be used in conjunction with the Amptrol Adapter Cable Kit. Connection information is included with the Amptrol Adapter Cable Kit.) The Amptrol arc start switch is nonfunctional in this application.

REMOTE CONTROL ADAPTER CABLE (K864)

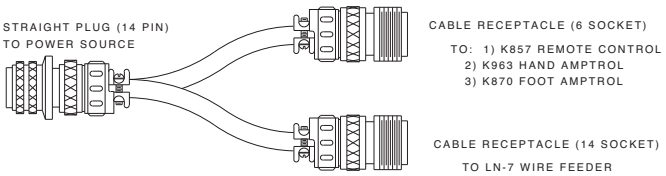

A "V" cable 12" (.30m) long to connect a K857 Remote Control, K963 Hand Amptrol or K870 Foot Amptrol (6-pin connector) with a wire-feeder (14-pin connector) and the machine (14-pin connector). If a remote control or amptrol is used alone the wire-feeder connection is then not used.

MULTIPROCESS SWITCH (K804-1)

Field installed kit that mounts on the front of the DC-400, and includes hinged covers over its output studs. The switch has three positions: Positive semiautomatic / automatic, negative semiautomatic / automatic, and stick / air carbon arc. Required when using the DC-400 for both semiautomatic/automatic and stick / air carbon arc. The field installed kit is equivalent to the factory installed option. For details on the Multiprocess Switch, see the section for Installation of Equipment Required for Recommended Processes.

HI-FREQUENCY KIT (K799 CODES 8634 AND ABOVE ONLY)

Kit supplies the high frequency plus gas valve for DC TIG welding. The DC-400 is shipped with proper R.F. bypass circuitry installed to protect the control circuit when welding with a HI-FREQ unit. K844 Water Valve Option Kit can be used with K799 when TIG welding with water cooled torches.

UNDERCARRIAGES (K817, K817R, K817P K841)

For easy moving of the machine, optional undercarriages are available with either steel (K817) or rubber tired (K817R) wheels or a platform undercarriage (K841) with mountings for two gas cylinder at rear of welder.

Install per instructions provided with trailer.

SAFETY PRECAUTIONS

⚠ WARNING

ELECTRIC SHOCK can kill.
- **Have an electrician install and service this equipment.**
- **Turn the input power off at the fuse box before working on equipment.**
- **Do not touch electrically live parts or electrode with skin or wet clothing.**
- **Insulate yourself from work and ground**
- **Always wear dry insulating gloves.**

See additional warning information throughout this operator's manual and the Engine manual as well.

ROUTINE MAINTENANCE

1. The fan motor has sealed bearings which require no service.

2. In extremely dusty locations, dirt may clog the air channels causing the welder to run hot. Blow out the machine at regular intervals.

3. In extremely dusty locations, dirt may accumulate on the remote control terminal strip TS1. Wipe or blow this terminal strip off at regular intervals. This is particularly important in damp locations.

HOW TO USE TROUBLESHOOTING GUIDE

⚠ WARNING

Service and Repair should only be performed by Lincoln Electric Factory Trained Personnel. Unauthorized repairs performed on this equipment may result in danger to the technician and machine operator and will invalidate your factory warranty. For your safety and to avoid Electrical Shock, please observe all safety notes and precautions detailed throughout this manual.

This Troubleshooting Guide is provided to help you locate and repair possible machine malfunctions. Simply follow the three-step procedure listed below.

Step 1. LOCATE PROBLEM (SYMPTOM).
Look under the column labeled "PROBLEM (SYMPTOMS)". This column describes possible symptoms that the machine may exhibit. Find the listing that best describes the symptom that the machine is exhibiting.

Step 2. POSSIBLE CAUSE.
The second column labeled "POSSIBLE CAUSE" lists the obvious external possibilities that may contribute to the machine symptom.

Step 3. RECOMMENDED COURSE OF ACTION
This column provides a course of action for the Possible Cause, generally it states to contact your local Lincoln Authorized Field Service Facility.

If you do not understand or are unable to perform the Recommended Course of Action safely, contact your local Lincoln Authorized Field Service Facility.

⚠ WARNING

ELECTRIC SHOCK can kill.
- Have an electrician install and service this equipment.
- Turn the input power off at the fuse box before working on equipment.
- Do not touch electrically hot parts.

⚠ CAUTION

If for any reason you do not understand the test procedures or are unable to perform the tests/repairs safely, contact your **Local Lincoln Authorized Field Service Facility** for technical troubleshooting assistance before you proceed.

Observe all Safety Guidelines detailed throughout this manual

PROBLEMS (SYMPTOMS)	POSSIBLE CAUSE	RECOMMENDED COURSE OF ACTION
Input contactor (CR1) chatters.	1. Faulty input contactor (CR1). 2. Low line voltage.	1. Repair or Replace. 2. Check input power.
Machine input contactor does not operate.	1. Supply line fuse blown. 2. Contactor power circuit dead. 3. Broken power lead. 4. Wrong input voltage. 5. Open input contactor coil. 6. POWER “I/0” switch (S1) not closing.	1. Replace if blown - look for reason first. 2. Check control transformer T2 and associated leads. 3. Check input voltage at contactor. 4. Check voltage against instructions. 5. Replace coil. 6. Replace switch.
Machine input contactor operates, but no output when trying to weld.	1. Trigger circuit between #2 and #4 leads is not being closed. 2. Electrode or work lead loose or broken. 3. Open main transformer (T1) primary or secondary circuit. 4. Defective Control PC Board. 5. Primary or secondary thermostats open.	1. Make sure trigger circuit is being closed. 2. Repair Connection. 3. Repair. 4. Replace. See Procedure for Replacing PC Boards. 5. Amber thermal protection light is on: Check for overheating; make sure fan is operating and there is no obstruction to free air flow.
Machine has minimum output and no control.	1. Terminals 75, 76 or 77 grounded to <u>positive</u> output.	1. Check 75, 76, or 77 for ground to positive output circuit. Nearly zero ohms to ground indicates a grounded circuit. A value greater than a few thousand ohms is normal. Self-restraining fuses on PC Board automatically reset within a few seconds after ground is cleared.

⚠ CAUTION

If for any reason you do not understand the test procedures or are unable to perform the tests/repairs safely, contact your **Local Lincoln Authorized Field Service Facility** for technical troubleshooting assistance before you proceed.

Observe all Safety Guidelines detailed throughout this manual

PROBLEMS (SYMPTOMS)	POSSIBLE CAUSE	RECOMMENDED COURSE OF ACTION
Machine has high output or pulsing output and no control.	1. Terminals 75, 76, or 77 grounded to negative output.	1. Check 75, 76, or 77 for ground to negative output circuit. Nearly zero ohms to ground indicates a grounded circuit. A value greater than a few thousand ohms is normal. Self-restoring fuses on PC Board automatically reset within a few seconds after ground is cleared.
Machine has low output and no control.	1. OUTPUT CONTROL "LOCAL-REMOTE" switch (S2) in wrong position.	1. Check position of switch.
	2. OUTPUT CONTROL switch faulty.	2. Check switch & replace if faulty.
	3. Open in feedback circuitry.	3. Check wiring and control PC Board wiring harness plugs.
	4. Faulty Control PC Board.	4. Replace. See Procedure for Replacing PC Boards.
	5. OUTPUT control potentiometer circuit open (lead 75).	5. Check and replace potentiometer if faulty. Check wiring of lead #75.
Machine does not have maximum output.	1. One input fuse blows.	1. Check and replace if blown after checking for reason for blown fuse.
	2. One phase of main transformer open.	2. Check for open and repair.
	3. Faulty Control PC Board.	3. Replace. See Procedure for Replacing PC Boards.
	4. OUTPUT control potentiometer.	4. Check and Replace if faulty.
	5. OUTPUT control potentiometer leads 210, 211 or 75 open.	5. Check and repair broken leads.
Machine will not shut off.	1. Input contactor contacts frozen.	1. Check and replace if necessary.
	2. Defective POWER "1/0" switch, (S1).	2. Replace.

⚠ CAUTION

If for any reason you do not understand the test procedures or are unable to perform the tests/repairs safely, contact your **Local Lincoln Authorized Field Service Facility** for technical troubleshooting assistance before you proceed.

Observe all Safety Guidelines detailed throughout this manual

PROBLEMS (SYMPTOMS)	POSSIBLE CAUSE	RECOMMENDED COURSE OF ACTION
Variable or sluggish welding arc.	1. Poor work or electrode connection. 2. Welding leads too small. 3. Welding current or voltage too low. 4. Defective main SCR bridge. 5. Microswitch S4C or S4D actuator defective.	1. Check and clean all connections. 2. Check table in instruction manual. 3. Check procedures for recommended settings. 4. Check and replace if defective. 5. Check and replace if defective. (If S4C or S4D actuator is found defective, replace mode switch cam also.)
OUTPUT control not functioning on the machine.	1. OUTPUT CONTROL switch in wrong position. 2. Faulty OUTPUT control switch. 3. Faulty OUTPUT control potentiometer. 4. Leads or connections open in control circuit. 5. Faulty Control PC Board.	1. Place switch in “LOCAL”. 2. Check and replace if found faulty. 3. Check and replace if found faulty. 4. Check lead continuity and connections for an open and repair if necessary. 5. Replace. See Procedure for Replacing PC Boards.
OUTPUT control not functioning on “REMOTE” control.	1. OUTPUT CONTROL switch in wrong position. 2. Faulty OUTPUT CONTROL switch. 3. Faulty remote control potentiometer. 4. Leads or connections open in control circuit. 5. Faulty Control PC Board.	1. Place switch in “REMOTE”. 2. Check and replace if found faulty. 3. Check and replace if found faulty. 4. Check all leads and connections, internal or remote, for continuity. Repair if necessary. 5. Replace. See Procedure for Replacing PC Boards.

⚠ CAUTION

If for any reason you do not understand the test procedures or are unable to perform the tests/repairs safely, contact your **Local Lincoln Authorized Field Service Facility** for technical troubleshooting assistance before you proceed.

Observe all Safety Guidelines detailed throughout this manual

PROBLEMS (SYMPTOMS)	POSSIBLE CAUSE	RECOMMENDED COURSE OF ACTION
Poor arc striking with semiautomatic or automatic wire feeders.	1. Defective start circuit. 2. Poor work connection. 3. Improper procedures. 4. Defective Control PC Board.	1. Check Start PC Board and reed switch CR3. 2. Work connection must be adequate for application. 3. Adjust procedures for improved starting. 4. Replace. See Procedure for Replacing PC Boards.
Poor arc characteristics.	1. Start circuit energized at all times (read switch CR3 not closing). 2. Defective Start PC Board. 3. Defective Control PC Board. 4. Capacitor(s) in output circuit failed. A failure is indicated if the small vent plug on top of a capacitor is raised or blown out.	1. Short reed switch CR3 leads together. If welding improves, replace reed switch. 2. If problem is still present with reed switch shorted, unplug Start PC Board. If problem disappears, replace Start PC Board. 3. Replace. See Procedure for Replacing PC Boards. 4. Replace entire bank of capacitors. Do not replace individual capacitors. **WARNING:** **The liquid electrolyte in these capacitors is toxic. Avoid contact with any portion of your body. Clean up vented electrolyte using rubber gloves and a water damped cloth. Any electrolyte which gets on skin, clean with soap and water.**
ARC CONTROL has no effect in CV (FCAW/GMAW) mode with short circuit transfer processes.	1. Defective R1, L1, S4C, S4D actuator or S5.	1. Check and replace if found defective. (If S4C or S4D actuator is found defective, replace mode switch cam also.)
115VAC Receptacle not working.	1. Circuit Breaker Tripped. 2. Defective Circuit Breaker. 3. Broken connection in wiring.	1. Reset circuit breaker. Make sure load on does not exceed 15A rating of circuit breaker. 2. Replace 3. Check all wiring going to receptacle and circuit breaker for possible broken connection.

⚠ CAUTION

If for any reason you do not understand the test procedures or are unable to perform the tests/repairs safely, contact your **Local Lincoln Authorized Field Service Facility** for technical troubleshooting assistance before you proceed.

PROCEDURE FOR REPLACING PC BOARDS

⚠ WARNING

ELECTRIC SHOCK can kill.
- **Have an electrician install and service this equipment.**
- **Turn the input power off at the fuse box before working on equipment.**
- **Do not touch electrically hot parts.**

When a PC Board is suspected to be defective, the following procedure must be followed:

1. Visually inspect the PC Board. If the board has fuses, check to see if any are blown. Are any of the components damaged? Is a conductor on the back side of the board damaged? If electrical damage is visible on the PC Board, inspect the machine wiring for grounds or shorts to avoid damaging a new PC Board, Install a new PC Board only after a visual inspection of the PC Board and machine wiring is satisfactory.
2. If the problem is remedied by a new PC Board, install the old PC Board and see if the problem still exists. If the problem does not return with the old board:
   a) Check the PC Board harness plug and PC Board plug for contamination, corrosion or oversize.
   b) Check leads in the harness for loose connections.

CONNECTING THE REMOTE CONTROL TO THE MACHINE

Extreme caution must be observed when installing or extending the wiring of a remote control. Improper connection of this unit can lead to failure of the output control rheostat or the control circuit. Only the green lead can and should be grounded to the machine case. When extending the standard remote control, make sure the leads are the same and the splice is waterproof. Be very careful not to ground the cable when in use and don't let the lugs touch against the case.

OUTPUT VOLTAGE

The output circuit voltage of the machine should be adjustable from 10 to 46 volts in CV. In the CC mode, the open circuit voltage should be approximately 57 volts (54 volts on 50/60 Hz) except at near minimum settings of the output control where it may be lower. If any other condition exists, refer to the Troubleshooting Guide.

FAULT PROTECTION OPERATION

The overload protection circuit, in the Control PC Board will limit the welding current (heat) to 550 amps if a short or overload is applied to the machine. (Refer to the Machine and Circuit Protection section).

CHECKING SNUBBER CIRCUIT

In case of an SCR malfunction or failure the snubber assembly should be checked. Turn the machine off and remove the sides of the machine. (See the instruction manual parts list for the exact location.)

1. Visually inspect the snubber assembly for overheated components or damaged components.

CHECKING OUTPUT CONTROL RHEOSTAT ON MACHINE

Turn machine off ("0" position).

Remove the control panel screws and open the control panel (see the section on Terminal Strip Connections for screw locations).

Turn the OUTPUT CONTROL switch to "REMOTE".

Disconnect the harness plug from the Control PC Board.

With an ohmmeter on X1K, connect it to lead 210 and 75 on R4.

Exercise caution to avoid damaging POT taps.

POWER "I/0" SWITCH CHECK

1. Turn off the machine power input ("0" position). S1 has 115V across it when the input power is connected.
2. Isolate the switch to be tested by removing all connecting leads.
3. Check to make sure the switch is making connections with an ohmmeter. The meter should read zero resistance.
4. Put the ohmmeter on X1K scale and measure the resistance between the terminal and the case of the machine (touch a self-tapping screw). Reading should be infinite.
5. If either step (3) or step (4) fails, replace the switch.

⚠ CAUTION

If for any reason you do not understand the test procedures or are unable to perform the tests/repairs safely, contact your **Local Lincoln Authorized Field Service Facility** for technical troubleshooting assistance before you proceed.

REMOTE CONTROL CHECK

Disconnect the remote output control and connect an ohmmeter across 75 to 76 and rotate the rheostat in the remote control. The resistance reading should go from zero to 10K ohms. Repeat with ohmmeter across 75 and 76 with same results. Connect ohmmeter across 75 and 77. The reading should be 10K ohms. A lower reading will indicate a shorted or partially shorted rheostat. A very high reading will indicate an open rheostat. In either of the last two cases, replace rheostat. Check cable for any physical damage.

POWER RECTIFIER BRIDGE ASSEMBLY CHECKING PROCEDURE

⚠ WARNING

ELECTRIC SHOCK can kill.
• Have an electrician install and service this equipment.
• Turn the input power off at the fuse box before working on equipment.
• Do not touch electrically hot parts.

---

1. **Bridge and Device Isolation (See the instruction manual parts list for the exact location.)**

   Disconnect the following leads from the bridge, shown in Diagram 1:

   a) Unplug P3 (G1, G2, G3 and 204) from the Control PC Board.

   b) Unplug P5 from the Snubber PC Board.

   c) Secondary leads X1, X2, and X3 from the anodes of the SCR's and cathodes of the diodes.

   d) Disconnect positive bridge lead from shunt and positive capacitor bank lead and from lug with triple 204 leads.

   e) Perform the following steps 2 and 3. If diodes and SCR's are not shorted, bridge test is completed. If any device appears shorted, disconnect the cathode lead of each diode (4 total) and repeat Steps 2 and 3.

2. **Power Diode Test**

   a) Establish the polarity of the ohmmeter leads and set to X10 scale.

   b) Connect the ohmmeter positive lead to anode and negative lead to cathode.

   c) Reverse the leads of the ohmmeter from Step b.

   d) A shorted diode will indicate zero or an equally low resistance in both directions. An open diode will have an infinite or high resistance in both directions and a good diode will have a low resistance in Step b and Step a much higher resistance in Step c.

3. **Power Silicon Controlled Rectifier Test**

   a) Connect the ohmmeter (set to m X10 scale) leads to the anode and cathode.

   b) Reverse the leads of the ohmmeter from Step a.

   c) A shorted SCR will indicate zero or an equally low resistance in one or both directions.

   d) Establish the polarity of the ohmmeter. Connect the positive lead to the gate and the negative lead to the cathode.

   e) An open gate circuit will have an infinite or high resistance. A good gate circuit will read a low resistance, but not zero ohms. If gate circuit reads zero ohms, check gate harness for shorts between gate leads and 204 before replacing SCR.

⚠ CAUTION

If for any reason you do not understand the test procedures or are unable to perform the tests/repairs safely, contact your **Local Lincoln Authorized Field Service Facility** for technical troubleshooting assistance before you proceed.

POWER RECTIFIER BRIDGE
DIAGRAM 1

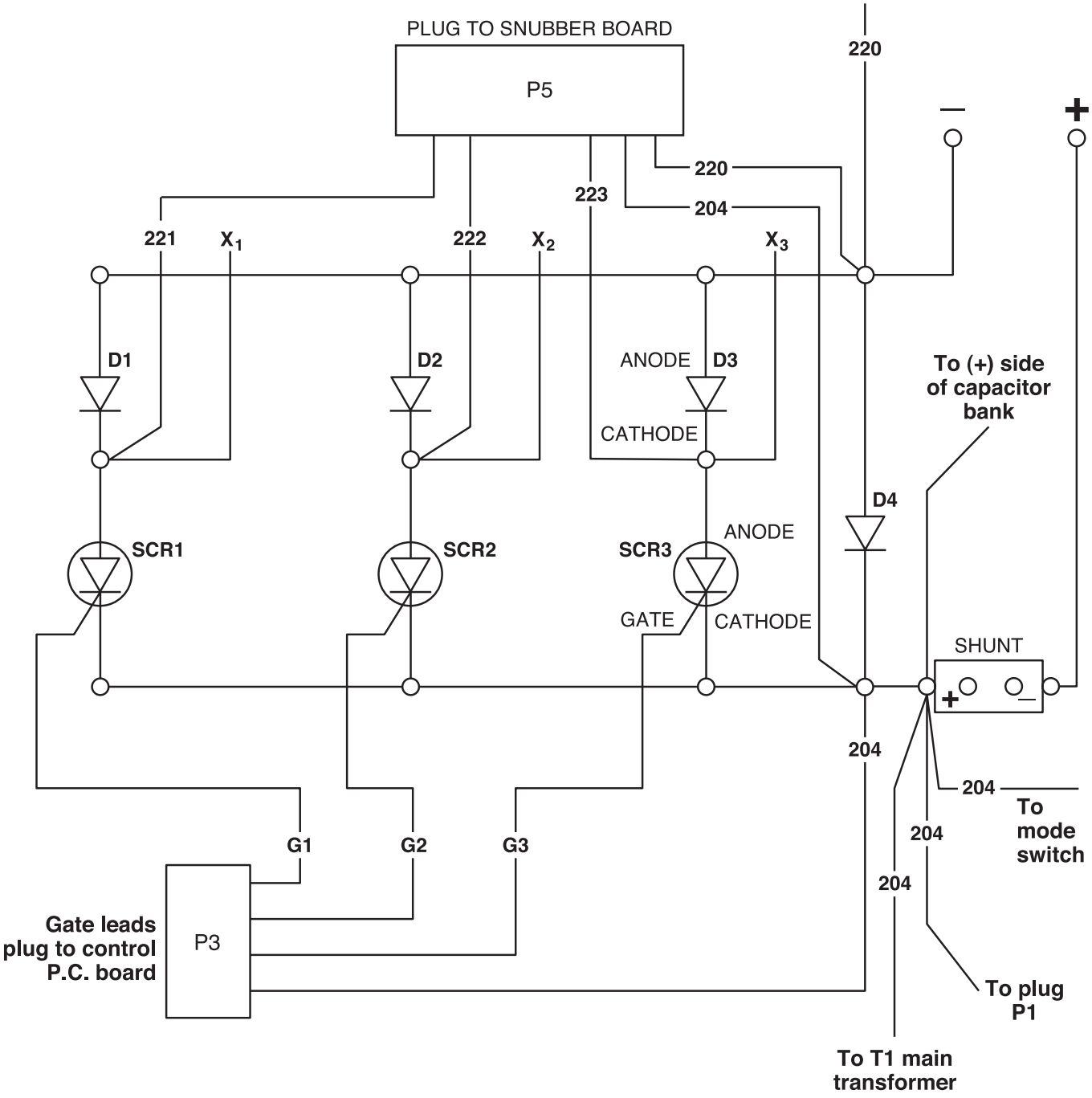

WIRING DIAGRAM FOR CODES 9847 THRU 9852, 9854, 9855, 9857, 10008, 10275, 11350, 11351

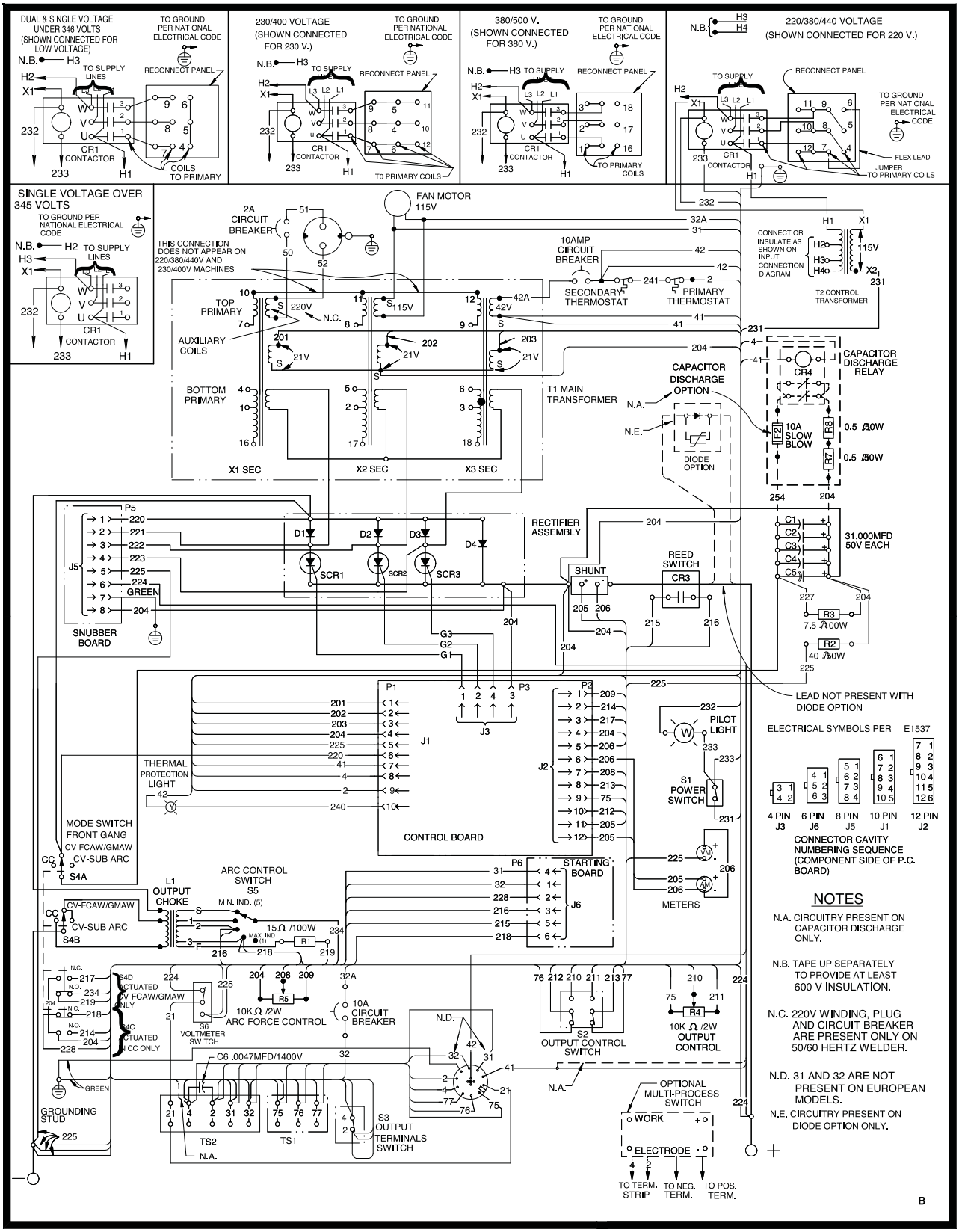

L9106

NOTE: This diagram is for reference only. It may not be accurate for all machines covered by this manual. The specific diagram for a particular code is pasted inside the machine on one of the enclosure panels. If the diagram is illegible, write to the Service Department for a replacement. Give the equipment code number.

WIRING DIAGRAM FOR CODES 10859, 10880,11083, 11084

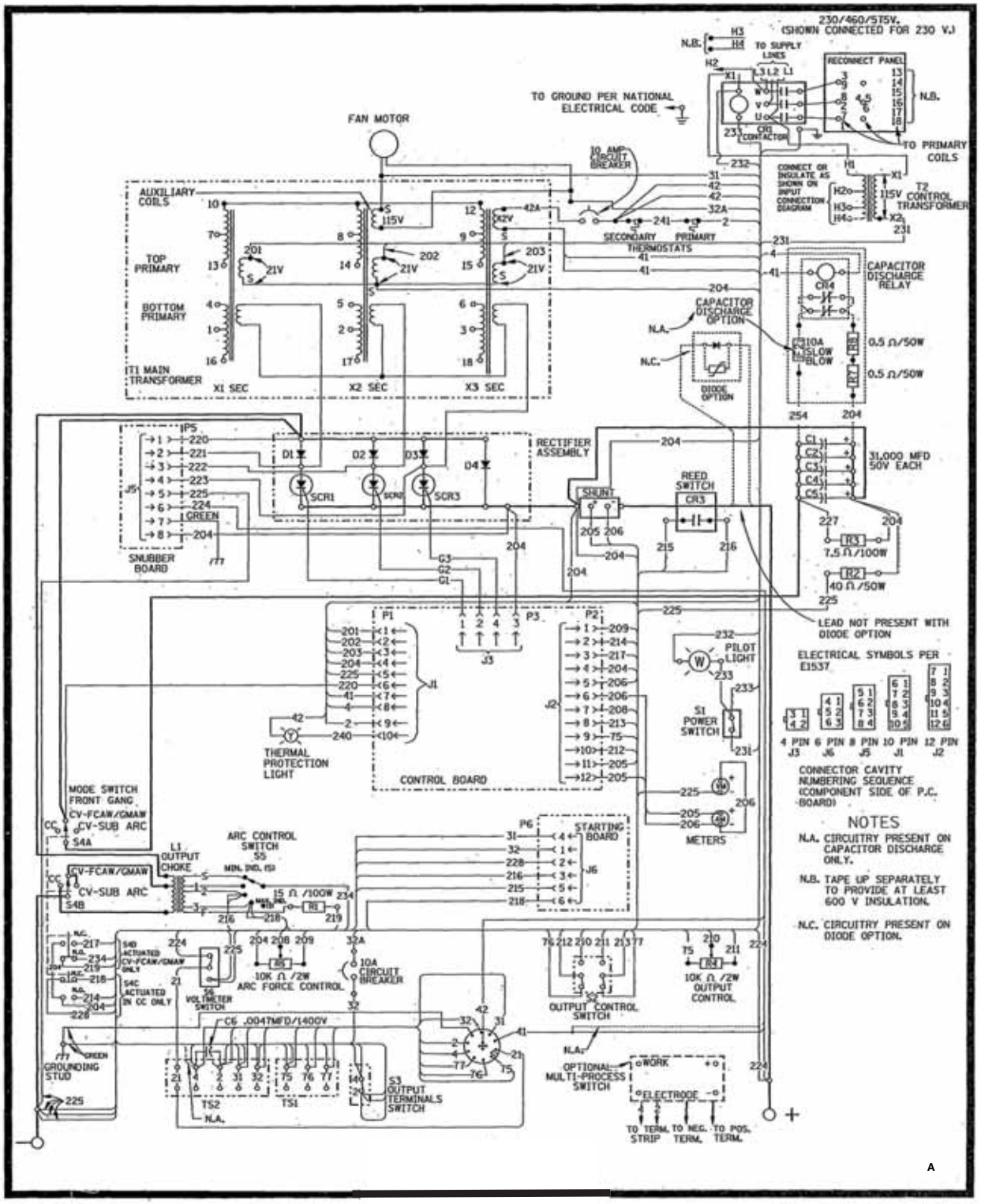

L9107

NOTE: This diagram is for reference only. It may not be accurate for all machines covered by this manual. The specific diagram for a particular code is pasted inside the machine on one of the enclosure panels. If the diagram is illegible, write to the Service Department for a replacement. Give the equipment code number.

WIRING DIAGRAM FOR CODE 9847, 11349

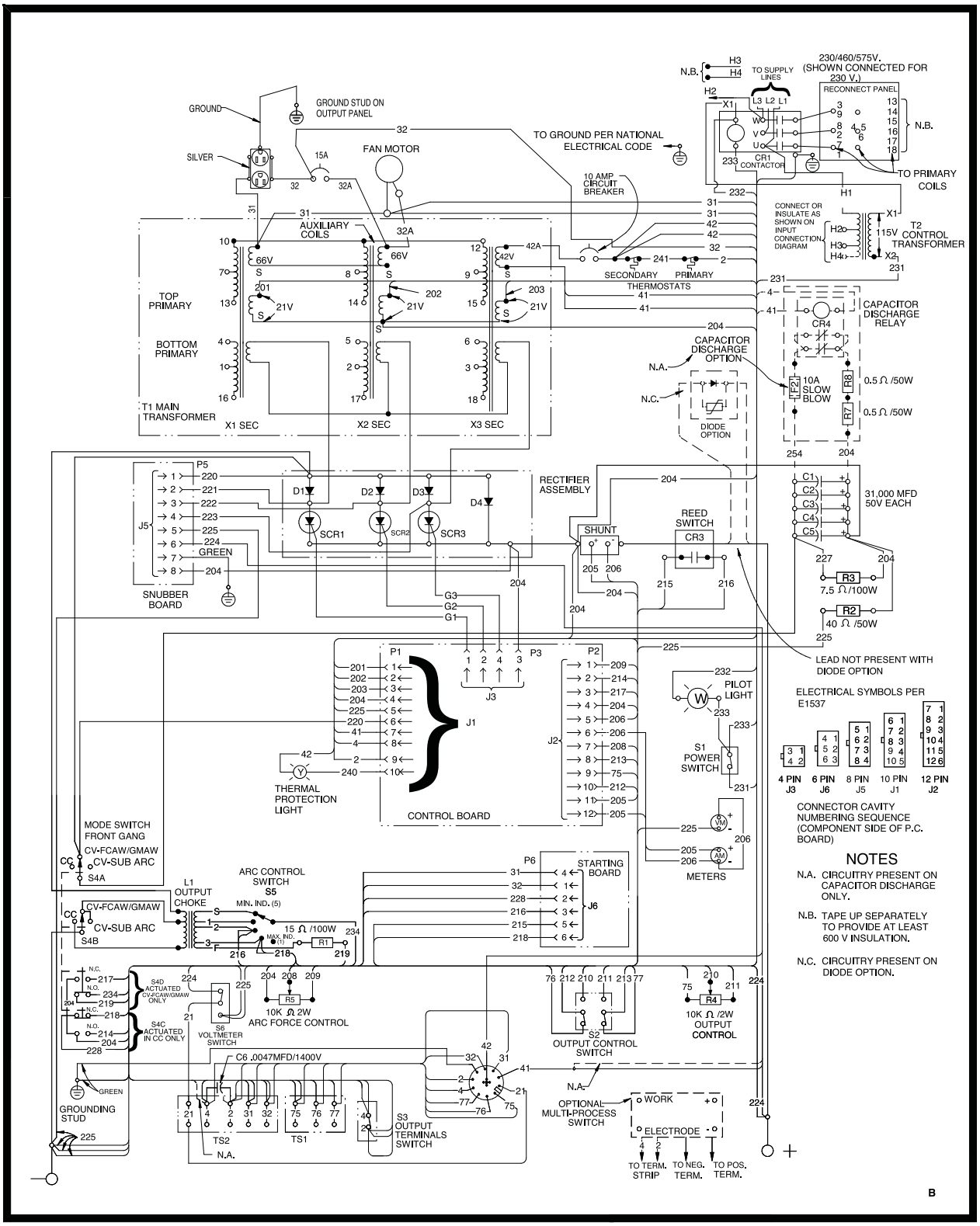

L11460

NOTE: This diagram is for reference only. It may not be accurate for all machines covered by this manual. The specific diagram for a particular code is pasted inside the machine on one of the enclosure panels. If the diagram is illegible, write to the Service Department for a replacement. Give the equipment code number.

WIRING DIAGRAM FOR CODES 11277, 11278 AND 11279, 11348, 11352, 11353 and 11567

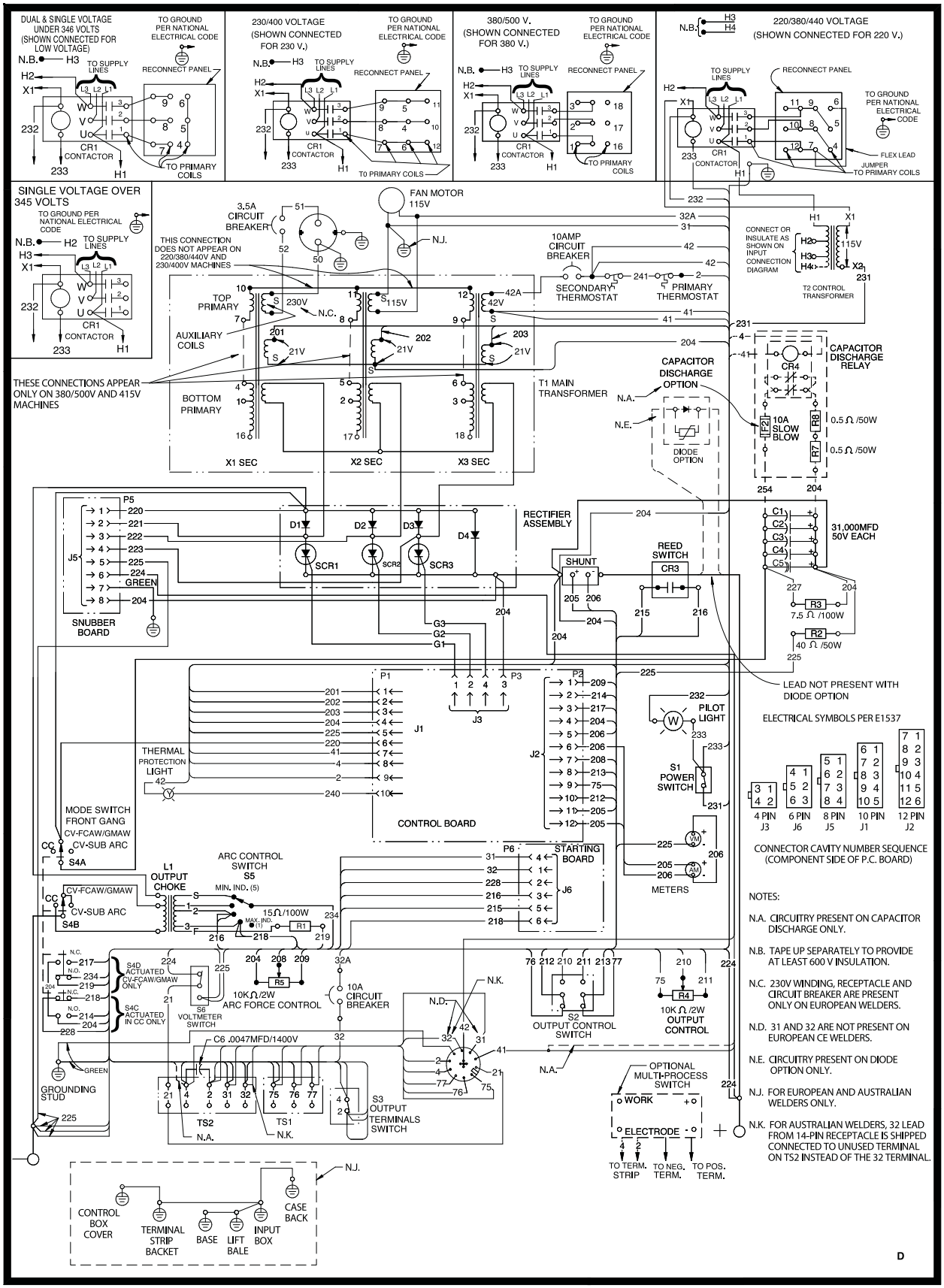

L12722

NOTE: This diagram is for reference only. It may not be accurate for all machines covered by this manual. The specific diagram for a particular code is pasted inside the machine on one of the enclosure panels. If the diagram is illegible, write to the Service Department for a replacement. Give the equipment code number.

NOTES

NOTES

WARNING	• Do not touch electrically live parts or electrode with skin or wet clothing. • Insulate yourself from work and ground.	• Keep flammable materials away.	• Wear eye, ear and body protection.
Spanish **AVISO DE PRECAUCION**	• No toque las partes o los electrodos bajo carga con la piel o ropa mojada. • Aíslese del trabajo y de la tierra.	• Mantenga el material combustible fuera del área de trabajo.	• Protéjase los ojos, los oídos y el cuerpo.
French **ATTENTION**	• Ne laissez ni la peau ni des vêtements mouillés entrer en contact avec des pièces sous tension. • Isolez-vous du travail et de la terre.	• Gardez à l'écart de tout matériel inflammable.	• Protégez vos yeux, vos oreilles et votre corps.
German **WARNUNG**	• Berühren Sie keine stromführenden Teile oder Elektroden mit Ihrem Körper oder feuchter Kleidung! • Isolieren Sie sich von den Elektroden und dem Erdboden!	• Entfernen Sie brennbarres Material!	• Tragen Sie Augen-, Ohren- und Körperschutz!
Portuguese **ATENÇÃO**	• Não toque partes elétricas e electrodos com a pele ou roupa molhada. • Isole-se da peça e terra.	• Mantenha inflamáveis bem guardados.	• Use proteção para a vista, ouvido e corpo.
Japanese **注意事項**	● 通電中の電気部品、又は溶材にヒフやぬれた布で触れないこと。 ● 施工物やアースから身体が絶縁されている様にして下さい。	● 燃えやすいものの側での溶接作業は絶対にしてはなりません。	● 目、耳及び身体に保護具をして下さい。
Chinese **警 告**	● 皮肤或濕衣物切勿接觸帶電部件及銲條。 ● 使你自己與地面和工件絶緣。	● 把一切易燃物品移離工作場所。	● 佩戴眼、耳及身體勞動保護用具。
Korean **위 험**	● 전도체나 용접봉을 젖은 헝겁 또는 피부로 절대 접촉치 마십시요. ● 모재와 접지를 접촉치 마십시요.	● 인화성 물질을 접근 시키지 마시요.	● 눈, 귀와 몸에 보호장구를 착용하십시요.
Arabic **تحذير**	● لا تلمس الاجزاء التي يسري فيها التيار الكهربائي أو الالكترود بجلد الجسم أو بالملابس المبللة بالماء. ● ضع عازلا على جسمك خلال العمل.	● ضع المواد القابلة للاشتعال في مكان بعيد.	● ضع أدوات وملابس واقية على عينيك وأذنيك وجسمك.

READ AND UNDERSTAND THE MANUFACTURER'S INSTRUCTION FOR THIS EQUIPMENT AND THE CONSUMABLES TO BE USED AND FOLLOW YOUR EMPLOYER'S SAFETY PRACTICES.

SE RECOMIENDA LEER Y ENTENDER LAS INSTRUCCIONES DEL FABRICANTE PARA EL USO DE ESTE EQUIPO Y LOS CONSUMIBLES QUE VA A UTILIZAR, SIGA LAS MEDIDAS DE SEGURIDAD DE SU SUPERVISOR.

LISEZ ET COMPRENEZ LES INSTRUCTIONS DU FABRICANT EN CE QUI REGARDE CET EQUIPMENT ET LES PRODUITS A ETRE EMPLOYES ET SUIVEZ LES PROCEDURES DE SECURITE DE VOTRE EMPLOYEUR.

LESEN SIE UND BEFOLGEN SIE DIE BETRIEBSANLEITUNG DER ANLAGE UND DEN ELEKTRODENEINSATZ DES HERSTELLERS. DIE UNFALLVERHÜTUNGSVORSCHRIFTEN DES ARBEITGEBERS SIND EBENFALLS ZU BEACHTEN.

• Keep your head out of fumes. • Use ventilation or exhaust to remove fumes from breathing zone.	• Turn power off before servicing.	• Do not operate with panel open or guards off.	**WARNING**
• Los humos fuera de la zona de respiración. • Mantenga la cabeza fuera de los humos. Utilice ventilación o aspiración para gases.	• Desconectar el cable de alimentación de poder de la máquina antes de iniciar cualquier servicio.	• No operar con panel abierto o guardas quitadas.	Spanish **AVISO DE PRECAUCION**
• Gardez la tête à l'écart des fumées. • Utilisez un ventilateur ou un aspirateur pour ôter les fumées des zones de travail.	• Débranchez le courant avant l'entretien.	• N'opérez pas avec les panneaux ouverts ou avec les dispositifs de protection enlevés.	French **ATTENTION**
• Vermeiden Sie das Einatmen von Schweibrauch! • Sorgen Sie für gute Be- und Entlüftung des Arbeitsplatzes!	• Strom vor Wartungsarbeiten abschalten! (Netzstrom völlig öffnen; Maschine anhalten!)	• Anlage nie ohne Schutzgehäuse oder Innenschutzverkleidung in Betrieb setzen!	German **WARNUNG**
• Mantenha seu rosto da fumaça. • Use ventilação e exhaustão para remover fumo da zona respiratória.	• Não opere com as tampas removidas. • Desligue a corrente antes de fazer serviço. • Não toque as partes elétricas nuas.	• Mantenha-se afastado das partes moventes. • Não opere com os paineis abertos ou guardas removidas.	Portuguese **ATENÇÃO**
● ヒュームから頭を離すようにして下さい。 ● 換気や排煙に十分留意して下さい。	● メンテナンス・サービスに取りかかる際には、まず電源スイッチを必ず切って下さい。	● パネルやカバーを取り外したままで機械操作をしないで下さい。	Japanese **注意事項**
●頭部遠離煙霧。 ●在呼吸區使用通風或排風器除煙。	● 維修前切斷電源。	●儀表板打開或沒有安全罩時不準作業。	Chinese **警 告**
● 얼굴로부터 용접가스를 멀리하십시요. ● 호흡지역으로부터 용접가스를 제거하기 위해 가스제거기나 통풍기를 사용하십시요.	● 보수전에 전원을 차단하십시요.	● 판넬이 열린 상태로 작동치 마십시요.	Korean **위 험**
● ابعد رأسك بعيداً عن الدخان. ● استعمل التهوية أو جهاز ضغط الدخان للخارج لكي تبعد الدخان عن المنطقة التي تتنفس فيها.	● اقطع التيار الكهربائي قبل القيام بأية صيانة.	● لا تشغل هذا الجهاز اذا كانت الاغطية الحديدية الواقية ليست عليه.	Arabic **تحذير**

LEIA E COMPREENDA AS INSTRUÇÕES DO FABRICANTE PARA ESTE EQUIPAMENTO E AS PARTES DE USO, E SIGA AS PRÁTICAS DE SEGURANÇA DO EMPREGADOR.

使う機械や溶材のメーカーの指示書をよく読み、まず理解して下さい。そして貴社の安全規定に従って下さい。

請詳細閱讀並理解製造廠提供的説明以及應該使用的銀捍材料，並請遵守貴方的有関勞動保護規定。

이 제폼에 동봉된 작업지침서를 숙지하시고 귀사의 작업자 안전수칙을 준수하시기 바랍니다.

اقرأ بتمعن وافهم تعليمات المصنع المنتج لهذه المعدات والمواد قبل استعمالها واتبع تعليمات الوقاية لصاحب العمل.

• World's Leader in Welding and Cutting Products •
• Sales and Service through Subsidiaries and Distributors Worldwide •
Cleveland, Ohio 44117-1199 U.S.A. TEL: 216.481.8100 FAX: 216.486.1751 WEB SITE: www.lincolnelectric.com