Return to Master TOC
View Safety Info

GENUINE LINCOLN PARTS™

NOTE: This manual will cover most of the troubleshooting and repair procedures for the code numbers listed. Some variances may exist when troubleshooting/repairing later code numbers.

LN-15™ WIRE FEEDER

For use with machines having Code Numbers:

11033, 11034, 11035, 11036, 11600, 11601

SERVICE MANUAL

SVM166-B | Issue Date 12, Jul
© Lincoln Global, Inc. All Rights Reserved.

THE LINCOLN ELECTRIC COMPANY
22801 St. Clair Avenue • Cleveland, OH • 44117-1199 • U.S.A.
Phone: +1.216.481.8100 • www.lincolnelectric.com

WARNING

CALIFORNIA PROPOSITION 65 WARNINGS

Diesel engine exhaust and some of its constituents are known to the State of California to cause cancer, birth defects, and other reproductive harm.

The Above For Diesel Engines

The engine exhaust from this product contains chemicals known to the State of California to cause cancer, birth defects, or other reproductive harm.

The Above For Gasoline Engines

ARC WELDING can be hazardous. PROTECT YOURSELF AND OTHERS FROM POSSIBLE SERIOUS INJURY OR DEATH. KEEP CHILDREN AWAY. PACEMAKER WEARERS SHOULD CONSULT WITH THEIR DOCTOR BEFORE OPERATING.

Read and understand the following safety highlights. For additional safety information, it is strongly recommended that you purchase a copy of "Safety in Welding & Cutting - ANSI Standard Z49.1" from the American Welding Society, P.O. Box 351040, Miami, Florida 33135 or CSA Standard W117.2-1974. A Free copy of "Arc Welding Safety" booklet E205 is available from the Lincoln Electric Company, 22801 St. Clair Avenue, Cleveland, Ohio 44117-1199.

BE SURE THAT ALL INSTALLATION, OPERATION, MAINTENANCE AND REPAIR PROCEDURES ARE PERFORMED ONLY BY QUALIFIED INDIVIDUALS.

FOR ENGINE powered equipment.

1.a. Turn the engine off before troubleshooting and maintenance work unless the maintenance work requires it to be running.

1.b. Operate engines in open, well-ventilated areas or vent the engine exhaust fumes outdoors.

1.c. Do not add the fuel near an open flame welding arc or when the engine is running. Stop the engine and allow it to cool before refueling to prevent spilled fuel from vaporizing on contact with hot engine parts and igniting. Do not spill fuel when filling tank. If fuel is spilled, wipe it up and do not start engine until fumes have been eliminated.

1.d. Keep all equipment safety guards, covers and devices in position and in good repair.Keep hands, hair, clothing and tools away from V-belts, gears, fans and all other moving parts when starting, operating or repairing equipment.

1.e. In some cases it may be necessary to remove safety guards to perform required maintenance. Remove guards only when necessary and replace them when the maintenance requiring their removal is complete. Always use the greatest care when working near moving parts.

1.f. Do not put your hands near the engine fan. Do not attempt to override the governor or idler by pushing on the throttle control rods while the engine is running.

1.g. To prevent accidentally starting gasoline engines while turning the engine or welding generator during maintenance work, disconnect the spark plug wires, distributor cap or magneto wire as appropriate.

1.h. To avoid scalding, do not remove the radiator pressure cap when the engine is hot.

ELECTRIC AND MAGNETIC FIELDS may be dangerous

2.a. Electric current flowing through any conductor causes localized Electric and Magnetic Fields (EMF). Welding current creates EMF fields around welding cables and welding machines

2.b. EMF fields may interfere with some pacemakers, and welders having a pacemaker should consult their physician before welding.

2.c. Exposure to EMF fields in welding may have other health effects which are now not known.

2.d. All welders should use the following procedures in order to minimize exposure to EMF fields from the welding circuit:

2.d.1. Route the electrode and work cables together - Secure them with tape when possible.

2.d.2. Never coil the electrode lead around your body.

2.d.3. Do not place your body between the electrode and work cables. If the electrode cable is on your right side, the work cable should also be on your right side.

2.d.4. Connect the work cable to the workpiece as close as possible to the area being welded.

2.d.5. Do not work next to welding power source.

Return to Master TOC
Return to Master TOC
Return to Master TOC
Return to Master TOC

Return to Master TOC
Return to Master TOC
Return to Master TOC
Return to Master TOC

ELECTRIC SHOCK can kill.

3.a. The electrode and work (or ground) circuits are electrically "hot" when the welder is on. Do not touch these "hot" parts with your bare skin or wet clothing. Wear dry, hole-free gloves to insulate hands.

3.b. Insulate yourself from work and ground using dry insulation. Make certain the insulation is large enough to cover your full area of physical contact with work and ground.

In addition to the normal safety precautions, if welding must be performed under electrically hazardous conditions (in damp locations or while wearing wet clothing; on metal structures such as floors, gratings or scaffolds; when in cramped positions such as sitting, kneeling or lying, if there is a high risk of unavoidable or accidental contact with the workpiece or ground) use the following equipment:

- **Semiautomatic DC Constant Voltage (Wire) Welder.**
- **DC Manual (Stick) Welder.**
- **AC Welder with Reduced Voltage Control.**

3.c. In semiautomatic or automatic wire welding, the electrode, electrode reel, welding head, nozzle or semiautomatic welding gun are also electrically "hot".

3.d. Always be sure the work cable makes a good electrical connection with the metal being welded. The connection should be as close as possible to the area being welded.

3.e. Ground the work or metal to be welded to a good electrical (earth) ground.

3.f. Maintain the electrode holder, work clamp, welding cable and welding machine in good, safe operating condition. Replace damaged insulation.

3.g. Never dip the electrode in water for cooling.

3.h. Never simultaneously touch electrically "hot" parts of electrode holders connected to two welders because voltage between the two can be the total of the open circuit voltage of both welders.

3.i. When working above floor level, use a safety belt to protect yourself from a fall should you get a shock.

3.j. Also see Items 6.c. and 8.

ARC RAYS can burn.

4.a. Use a shield with the proper filter and cover plates to protect your eyes from sparks and the rays of the arc when welding or observing open arc welding. Headshield and filter lens should conform to ANSI Z87. I standards.

4.b. Use suitable clothing made from durable flame-resistant material to protect your skin and that of your helpers from the arc rays.

4.c. Protect other nearby personnel with suitable, non-flammable screening and/or warn them not to watch the arc nor expose themselves to the arc rays or to hot spatter or metal.

FUMES AND GASES can be dangerous.

5.a. Welding may produce fumes and gases hazardous to health. Avoid breathing these fumes and gases.When welding, keep your head out of the fume. Use enough ventilation and/or exhaust at the arc to keep fumes and gases away from the breathing zone. **When welding with electrodes which require special ventilation such as stainless or hard facing (see instructions on container or MSDS) or on lead or cadmium plated steel and other metals or coatings which produce highly toxic fumes, keep exposure as low as possible and within applicable OSHA PEL and ACGIH TLV limits using local exhaust or mechanical ventilation. In confined spaces or in some circumstances, outdoors, a respirator may be required. Additional precautions are also required when welding on galvanized steel.**

5. b. The operation of welding fume control equipment is affected by various factors including proper use and positioning of the equipment, maintenance of the equipment and the specific welding procedure and application involved. Worker exposure level should be checked upon installation and periodically thereafter to be certain it is within applicable OSHA PEL and ACGIH TLV limits.

5.c. Do not weld in locations near chlorinated hydrocarbon vapors coming from degreasing, cleaning or spraying operations. The heat and rays of the arc can react with solvent vapors to form phosgene, a highly toxic gas, and other irritating products.

5.d. Shielding gases used for arc welding can displace air and cause injury or death. Always use enough ventilation, especially in confined areas, to insure breathing air is safe.

5.e. Read and understand the manufacturer's instructions for this equipment and the consumables to be used, including the material safety data sheet (MSDS) and follow your employer's safety practices. MSDS forms are available from your welding distributor or from the manufacturer.

5.f. Also see item 1.b.

Return to Master TOC
Return to Master TOC
Return to Master TOC
Return to Master TOC

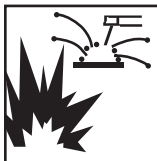

WELDING and CUTTING SPARKS can cause fire or explosion.

6.a. Remove fire hazards from the welding area.If this is not possible, cover them to prevent the welding sparks from starting a fire. Remember that welding sparks and hot materials from welding can easily go through small cracks and openings to adjcent areas. Avoid welding near hydraulic lines. Have a fire extinguisher readily available.

6.b. Where compressed gases are to be used at the job site, special precautions should be used to prevent hazardous situations. Refer to “Safety in Welding and Cutting” (ANSI Standard Z49.1) and the operating information for the equipment being used.

6.c. When not welding, make certain no part of the electrode circuit is touching the work or ground. Accidental contact can cause overheating and create a fire hazard.

6.d. Do not heat, cut or weld tanks, drums or containers until the proper steps have been taken to insure that such procedures will not cause flammable or toxic vapors from substances inside. They can cause an explosion even though they have been “cleaned”. For information, purchase “Recommended Safe Practices for the Preparation for Welding and Cutting of Containers and Piping That Have Held Hazardous Substances”, AWS F4.1 from the American Welding Society (see address above).

6.e. Vent hollow castings or containers before heating, cutting or welding. They may explode.

6.f. Sparks and spatter are thrown from the welding arc. Wear oil free protective garments such as leather gloves, heavy shirt, cuffless trousers, high shoes and a cap over your hair. Wear ear plugs when welding out of position or in confined places. Always wear safety glasses with side shields when in a welding area.

6.g. Connect the work cable to the work as close to the welding area as practical. Work cables connected to the building framework or other locations away from the welding area increase the possibility of the welding current passing through lifting chains, crane cables or other alternate circuits. This can create fire hazards or overheat lifting chains or cables until they fail.

6.h. Also see item 1.c.

6.I. Read and follow NFPA 51B “ Standard for Fire Prevention During Welding, Cutting and Other Hot Work”, available from NFPA, 1 Batterymarch Park,PO box 9101, Quincy, Ma 022690-9101.

6.j. Do not use a welding power source for pipe thawing.

CYLINDER may explode if damaged.

7.a. Use only compressed gas cylinders containing the correct shielding gas for the process used and properly operating regulators designed for the gas and pressure used. All hoses, fittings, etc. should be suitable for the application and maintained in good condition.

7.b. Always keep cylinders in an upright position securely chained to an undercarriage or fixed support.

7.c. Cylinders should be located:

- Away from areas where they may be struck or subjected to physical damage.
- A safe distance from arc welding or cutting operations and any other source of heat, sparks, or flame.

7.d. Never allow the electrode, electrode holder or any other electrically “hot” parts to touch a cylinder.

7.e. Keep your head and face away from the cylinder valve outlet when opening the cylinder valve.

7.f. Valve protection caps should always be in place and hand tight except when the cylinder is in use or connected for use.

7.g. Read and follow the instructions on compressed gas cylinders, associated equipment, and CGA publication P-I, “Precautions for Safe Handling of Compressed Gases in Cylinders,” available from the Compressed Gas Association 1235 Jefferson Davis Highway, Arlington, VA 22202.

FOR ELECTRICALLY powered equipment.

8.a. Turn off input power using the disconnect switch at the fuse box before working on the equipment.

8.b. Install equipment in accordance with the U.S. National Electrical Code, all local codes and the manufacturer’s recommendations.

8.c. Ground the equipment in accordance with the U.S. National Electrical Code and the manufacturer’s recommendations.

Refer to **http://www.lincolnelectric.com/safety** for additional safety information.

Return to Master TOC
Return to Master TOC
Return to Master TOC
Return to Master TOC

PRÉCAUTIONS DE SÛRETÉ

Pour votre propre protection lire et observer toutes les instructions et les précautions de sûreté specifiques qui parraissent dans ce manuel aussi bien que les précautions de sûreté générales suivantes:

Sûreté Pour Soudage A L'Arc

1. Protegez-vous contre la secousse électrique:

   a. Les circuits à l'électrode et à la piéce sont sous tension quand la machine à souder est en marche. Eviter toujours tout contact entre les parties sous tension et la peau nue ou les vétements mouillés. Porter des gants secs et sans trous pour isoler les mains.
   b. Faire trés attention de bien s'isoler de la masse quand on soude dans des endroits humides, ou sur un plancher metallique ou des grilles metalliques, principalement dans les positions assis ou couché pour lesquelles une grande partie du corps peut être en contact avec la masse.
   c. Maintenir le porte-électrode, la pince de masse, le câble de soudage et la machine à souder en bon et sûr état defonctionnement.
   d.Ne jamais plonger le porte-électrode dans l'eau pour le refroidir.
   e. Ne jamais toucher simultanément les parties sous tension des porte-électrodes connectés à deux machines à souder parce que la tension entre les deux pinces peut être le total de la tension à vide des deux machines.
   f. Si on utilise la machine à souder comme une source de courant pour soudage semi-automatique, ces precautions pour le porte-électrode s'applicuent aussi au pistolet de soudage.

2. Dans le cas de travail au dessus du niveau du sol, se protéger contre les chutes dans le cas ou on recoit un choc. Ne jamais enrouler le câble-électrode autour de n'importe quelle partie du corps.

3. Un coup d'arc peut être plus sévère qu'un coup de soliel, donc:

   a. Utiliser un bon masque avec un verre filtrant approprié ainsi qu'un verre blanc afin de se protéger les yeux du rayonnement de l'arc et des projections quand on soude ou quand on regarde l'arc.
   b. Porter des vêtements convenables afin de protéger la peau de soudeur et des aides contre le rayonnement de l'arc.
   c. Protéger l'autre personnel travaillant à proximité au soudage à l'aide d'écrans appropriés et non-inflammables.

4. Des gouttes de laitier en fusion sont émises de l'arc de soudage. Se protéger avec des vêtements de protection libres de l'huile, tels que les gants en cuir, chemise épaisse, pantalons sans revers, et chaussures montantes.

5. Toujours porter des lunettes de sécurité dans la zone de soudage. Utiliser des lunettes avec écrans lateraux dans les zones où l'on pique le laitier.

6. Eloigner les matériaux inflammables ou les recouvrir afin de prévenir tout risque d'incendie dû aux étincelles.

7. Quand on ne soude pas, poser la pince à une endroit isolé de la masse. Un court-circuit accidental peut provoquer un échauffement et un risque d'incendie.

8. S'assurer que la masse est connectée le plus prés possible de la zone de travail qu'il est pratique de le faire. Si on place la masse sur la charpente de la construction ou d'autres endroits éloignés de la zone de travail, on augmente le risque de voir passer le courant de soudage par les chaines de levage, câbles de grue, ou autres circuits. Cela peut provoquer des risques d'incendie ou d'echauffement des chaines et des câbles jusqu'à ce qu'ils se rompent.

9. Assurer une ventilation suffisante dans la zone de soudage. Ceci est particuliérement important pour le soudage de tôles galvanisées plombées, ou cadmiées ou tout autre métal qui produit des fumeés toxiques.

10. Ne pas souder en présence de vapeurs de chlore provenant d'opérations de dégraissage, nettoyage ou pistolage. La chaleur ou les rayons de l'arc peuvent réagir avec les vapeurs du solvant pour produire du phosgéne (gas fortement toxique) ou autres produits irritants.

11. Pour obtenir de plus amples renseignements sur la sûreté, voir le code "Code for safety in welding and cutting" CSA Standard W 117.2-1974.

PRÉCAUTIONS DE SÛRETÉ POUR LES MACHINES À SOUDER À TRANSFORMATEUR ET À REDRESSEUR

1. Relier à la terre le chassis du poste conformement au code de l'électricité et aux recommendations du fabricant. Le dispositif de montage ou la piece à souder doit être branché à une bonne mise à la terre.

2. Autant que possible, l'installation et l'entretien du poste seront effectués par un électricien qualifié.

3. Avant de faires des travaux à l'interieur de poste, la debrancher à l'interrupteur à la boite de fusibles.

4. Garder tous les couvercles et dispositifs de sûreté à leur place.

Return to Master TOC

Electromagnetic Compatibility (EMC)

Conformance
Products displaying the CE mark are in conformity with European Community Council Directive of 15 Dec 2004 on the approximation of the laws of the Member States relating to electromagnetic compatibility, 2004/108/EC. It was manufactured in conformity with a national standard that implements a harmonized standard: EN 60974-10 Electromagnetic Compatibility (EMC) Product Standard for Arc Welding Equipment. It is for use with other Lincoln Electric equipment. It is designed for industrial and professional use.

Introduction
All electrical equipment generates small amounts of electromagnetic emission. Electrical emission may be transmitted through power lines or radiated through space, similar to a radio transmitter. When emissions are received by other equipment, electrical interference may result. Electrical emissions may affect many kinds of electrical equipment; other nearby welding equipment, radio and TV reception, numerical controlled machines, telephone systems, computers, etc. Be aware that interference may result and extra precautions may be required when a welding power source is used in a domestic establishment.

Installation and Use
The user is responsible for installing and using the welding equipment according to the manufacturer's instructions. If electromagnetic disturbances are detected then it shall be the responsibility of the user of the welding equipment to resolve the situation with the technical assistance of the manufacturer. In some cases this remedial action may be as simple as earthing (grounding) the welding circuit, see Note. In other cases it could involve construction of an electromagnetic screen enclosing the power source and the work complete with associated input filters. In all cases electromagnetic disturbances must be reduced to the point where they are no longer troublesome.

Note: The welding circuit may or may not be earthed for safety reasons according to national codes. Changing the earthing arrangements should only be authorized by a person who is competent to access whether the changes will increase the risk of injury, e.g., by allowing parallel welding current return paths which may damage the earth circuits of other equipment.

Assessment of Area
Before installing welding equipment the user shall make an assessment of potential electromagnetic problems in the surrounding area. The following shall be taken into account:

a) other supply cables, control cables, signaling and telephone cables; above, below and adjacent to the welding equipment;

b) radio and television transmitters and receivers;

c) computer and other control equipment;

d) safety critical equipment, e.g., guarding of industrial equipment;

e) the health of the people around, e.g., the use of pacemakers and hearing aids;

f) equipment used for calibration or measurement

g) the immunity of other equipment in the environment. The user shall ensure that other equipment being used in the environment is compatible. This may require additional protection measures;

h) the time of day that welding or other activities are to be carried out.

Return to Master TOC

Electromagnetic Compatibility (EMC)

The size of the surrounding area to be considered will depend on the structure of the building and other activities that are taking place. The surrounding area may extend beyond the boundaries of the premises.

Methods of Reducing Emissions

Mains Supply
Welding equipment should be connected to the mains supply according to the manufacturer's recommendations. If interference occurs, it may be necessary to take additional precautions such as filtering of the mains supply. Consideration should be given to shielding the supply cable of permanently installed welding equipment, in metallic conduit or equivalent. Shielding should be electrically continuous throughout its length. The shielding should be connected to the welding power source so that good electrical contact is maintained between the conduit and the welding power source enclosure.

Maintenance of the Welding Equipment
The welding equipment should be routinely maintained according to the manufacturer's recommendations. All access and service doors and covers should be closed and properly fastened when the welding equipment is in operation. The welding equipment should not be modified in any way except for those changes and adjustments covered in the manufacturers instructions. In particular, the spark gaps of arc striking and stabilizing devices should be adjusted and maintained according to the manufacturer's recommendations.

Welding Cables
The welding cables should be kept as short as possible and should be positioned close together, running at or close to floor level.

Equipotential Bonding
Bonding of all metallic components in the welding installation and adjacent to it should be considered. However, metallic components bonded to the work piece will increase the risk that the operator could receive a shock by touching these metallic components and the electrode at the same time. The operator should be insulated from all such bonded metallic components.

Earthing of the Workpiece
Where the workpiece is not bonded to earth for electrical safety, not connected to earth because of its size and position, e.g., ships hull or building steelwork, a connection bonding the workpiece to earth may reduce emissions in some, but not all instances. Care should be taken to prevent the earthing of the workpiece increasing the risk of injury to users, or damage to other electrical equipment. Where necessary, the connection of the workpiece to earth should be made by a direct connection to the workpiece, but in some countries where direct connection is not permitted, the bonding should be achieved by suitable capacitance, selected according to national regulations.

Screening and Shielding
Selective screening and shielding of other cables and equipment in the surrounding area may alleviate problems of interference. Screening of the entire welding installation may be considered for special applications. [1]

---

[1] Portions of the preceding text are contained in EN 60974-10: "Electromagnetic Compatibility (EMC) product standard for arc welding equipment."

MASTER TABLE OF CONTENTS FOR ALL SECTIONS

Safety	i-vi
Installation	Section A
Operation	Section B
Accessories	Section C
Maintenance	Section D
Theory of Operation	Section E
Troubleshooting and Repair	Section F
Electrical Diagrams	Section G
Parts Manual	P482 Series-Across the Arc Models
Parts Manual	P483 Series-Control Cable Models

TABLE OF CONTENTS
- INSTALLATION SECTION -

Installation .....Section A

Technical Specifications.....A-2
Safety Precautions.....A-3
High Frequency Protection.....A-3
Connections.....A-4
Gun & Cable Assembly.....A-6
Feeding Wire Electrode.....A-7

Return to Master TOC
Return to Master TOC
Return to Master TOC
Return to Master TOC

TECHNICAL SPECIFICATIONS – LN-15™ (K1870-1), (K1870-2 CE) Across the Arc LN-15™ (K1871-1), (K1871-2 CE) Control Cable

INPUT VOLTAGE	
15-110 VDC (5 Amps Maximum) Across the Arc Model	42 VAC/1/50/60 (5 Amps Maximum) CONTROL CABLE MODEL

RATED CURRENT	
300 Amps 60% Duty Cycle	500 Amps 60% Duty Cycle
250 Amps 100% Duty Cycle	350 Amps 100% Duty Cycle

ELECTRODE DIAMETERS and SPEED RANGE		
	Electrode Size	Speed Range
Solid Electrode Steel	0.023 - 0.052" (0.6 - 1.3 mm)	50 - 700 in/min (1.3 - 17.8 m/min)
Flux Cored Electrode	0.0345 - 5/64" (0.9 - 2.3 mm)	50 - 400 in/min (1.3 - 10.1 m/min)

PHYSICAL DIMENSIONS				
HEIGHT	WIDTH	DEPTH	WEIGHT	SPOOL SIZE CAPABILITY
12.7 Inches (323 mm)	8.7 Inches (221mm)	23 Inches (584 mm)	30lbs (14kg)	8 (200mm) Dia. x 4 (100mm) Wide Spools including AWS 8 DIA. (10-15lbs) JIS S-3 200mm max. (5 - 7 kg) DIN 200 (5 kg)

TEMPERATURE RANGE	
OPERATION:	- 20° C to +50° C (- 4° F to +122 F)
STORAGE:	- 40° C to +70° C (- 40° F to +158 F)

Return to Section TOC
Return to Master TOC

Return to Section TOC
Return to Master TOC

SAFETY PRECAUTIONS

⚠ WARNING

ELECTRIC SHOCK CAN KILL.

- **ONLY QUALIFIED PERSONNEL SHOULD PERFORM THIS INSTALLATION.**
- **Turn off input power to the power source at the disconnect switch or fuse box before working on this equipment. Turn off the input power to any other equipment connected to the welding system at the disconnect switch or fuse box before working on the equipment.**
- **Do not touch electrically hot parts.**
- **Do not touch metal portions of the LN-15™ work lead clip when the welding power source is.**
- **Do not connect the LN-15™ to a non-Lincoln TIG power source, a SQUARE WAVE TIG power source, or a PLASMA CUTTING power source.**

LOCATION

The LN-15™ should be positioned upright on a horizontal surface. Do not submerge the LN-15™ in water. The best practice is to keep the wire feeder in a dry environment. When working outdoors in severe wet weather, place the LN-15™ with the door facing up.

WORK CLIP LEAD

⚠ WARNING

ELECTRIC SHOCK CAN KILL.

- **ONLY QUALIFIED PERSONNEL SHOULD PERFORM THIS INSTALLATION.**
- **Do not touch metal portions of the LN-15™ work clip lead when the welding power source is on. The work clip lead is electrically "hot" to work if the input electrode cable to the LN-15™ is electrically "hot", even if the gun trigger is off. Care should be taken to only handle the LN-15™ work clip lead by its nonmetal insulated portions and/or the welding power source should be turned off before handling the work clip.**
- **Do not attach the work clip lead to the roll cage or bottom skids of the LN-15™.**
- **Attach the work clip only to the work piece.**

** The work clip lead is present only on Across-the-Arc models.

The work clip lead attached to the front of the LN-15™ must be connected directly to the work using the spring clip on the end of the lead.

If the work clip lead is not connected, the LN-15™ will not operate.

The work clip lead also serves as a work sensing lead for the LN-15™. If the work clip lead is extended by the user beyond the standard 15' (4.6m) length, the voltmeter reading will be lower than the actual arc volts due to resistance in the extended lead. To minimize the error, the following lead size is recommended for the maximum extended lengths shown.

AWG	Max. Length
#14	25 ft (7.6m)
#12	50 ft (15.2m)
#10	100 ft (30.5m)
#6	200 ft (61.0m)

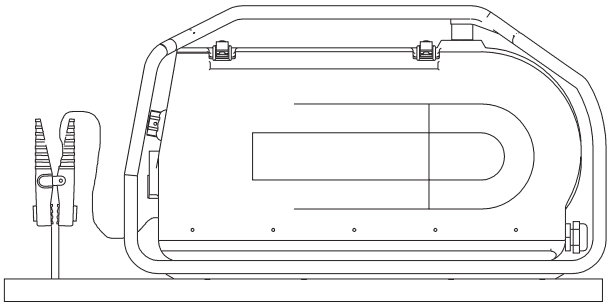

CORRECT WORK CLIP ATTACHED TO WORK

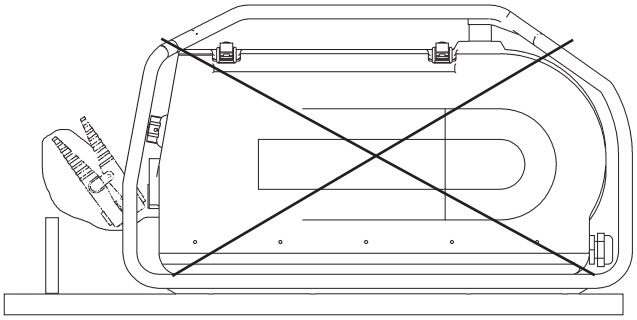

INCORRECT WORK CLIP ATTACHED TO ROLL CAGE

HIGH FREQUENCY PROTECTION

⚠ CAUTION

To prevent possible damage to the LN-15™, do not connect the LN-15™ to non-Lincoln TIG or SQUARE WAVE power sources. TIG high frequency should never be applied to the LN-15™.

Locate the LN-15™ away from radio controlled machinery. The normal operation of the LN-15™ may adversely affect the operation of RF controlled equipment, which may result in bodily injury or damage to the equipment total.

Return to Section TOC
Return to Master TOC

WELD CABLE CONNECTIONS

⚠ WARNING

ELECTRIC SHOCK CAN KILL.

- **Only a qualified electrician should connect the electrode leads to the LN-15™. Connections should be made in accordance with all local and national electrical codes. Failure to do so may result in bodily injury or death.**

The size of the electrode cable and work cable must be sufficient for the maximum weld current and total cable length used.

To avoid interference problems with other equipment and to achieve the best possible operation, route all cables directly to the work or wire feeder. Avoid excessive lengths and do not coil excess cable. Be sure the connection to the work makes tight metal-to-metal electrical contact. (See Table A.1)

TABLE A.1

Weld Current 60% Duty Cycle	Total Cable Length (electrode cable + work cable)			
	50 - 100' (15-30 m)	100 - 150' (30 - 46m)	150 - 200' (46 - 61m)	200 - 250' (61m - 76m)
200 Amps	2 AWG	2 AWG	1 AWG	1/0
300 Amps	1 AWG	1 AWG	1/0	2/0
400 Amps	2/0	2/0	3/0	3/0

ELECTRODE CONNECTION

Route the electrode cable through the strain relief in the rear of the case. Connect the electrode cable to the LN-15™ input stud using the mounting hardware provided. Secure the cable by tightening the strain relief.

All domestic models are supplied with pigtail for customers that prefer to make a taped and bolted connection externally. **CE** models have a male twist connector for the electrode connection.

WORK CONNECTION

Connect a work lead of sufficient size between the proper output stud on the power source and the work. Be sure the connection to the work makes tight metal to metal electrical contact. Poor work lead connections can result in poor welding performance.

POWER SOURCE CONNECTION

The LN-15™ can be used with any DC welding power source. A constant voltage power source is recommend; however, the LN-15™ can also be used with a constant current power source as long as the open circuit voltage is less than 110VDC.

⚠ CAUTION

To prevent possible damage to the LN-15™, do not connect the LN-15™ to non-Lincoln TIG or square wave power sources. TIG high frequency should never be applied to the LN-15™.

ENGINE DRIVE POWER SOURCE CONNECTION

The LN-15™ has an internal contactor and the electrode is not energized until the gun trigger is closed. When the gun trigger is closed the wire will begin to feed and the welding process is started.

1. Shut the welder off.
2. For electrode Positive polarity welding, connect the electrode cable to the "+" terminal of the welder and work cable to the "-" terminal of the welder. For Electrode Negative welding, connect the electrode cable to the "-" terminal of the welder and work cable to the "+" terminal of the welder.
3. Attach the work clip lead from the front of the LN-15™ to work using the spring clip at the end of the lead. This is a control lead to supply current to the wire feeder motor; it does not carry welding current.
4. Set the MODE switch on the engine drive to CV-WIRE.
5. Set the WELD TERMINALS switch to WELD TERMINALS ON.
6. Set the WIRE FEEDER VOLTMETER switch to either "+" or "-" as required by the electrode polarity being used.
7. Set the ARC CONTROL knob to "0" initially and adjust to suit.
8. Set the IDLE switch to the AUTO position. Important: Some older engine drives may require the IDLE switch to be in the HIGH position for proper LN-15™ operation.

Return to Section TOC
Return to Master TOC

CONNECTION DIAGRAM, ACROSS THE ARC MODEL Set-Up (See Figure A.1)

Typically used for general fabrication, maintenance and repair jobs because it's easy to set up and operate. Requires only one cable-less to carry. Contactor standard on Across The Arc Model.

FIGURE A.1

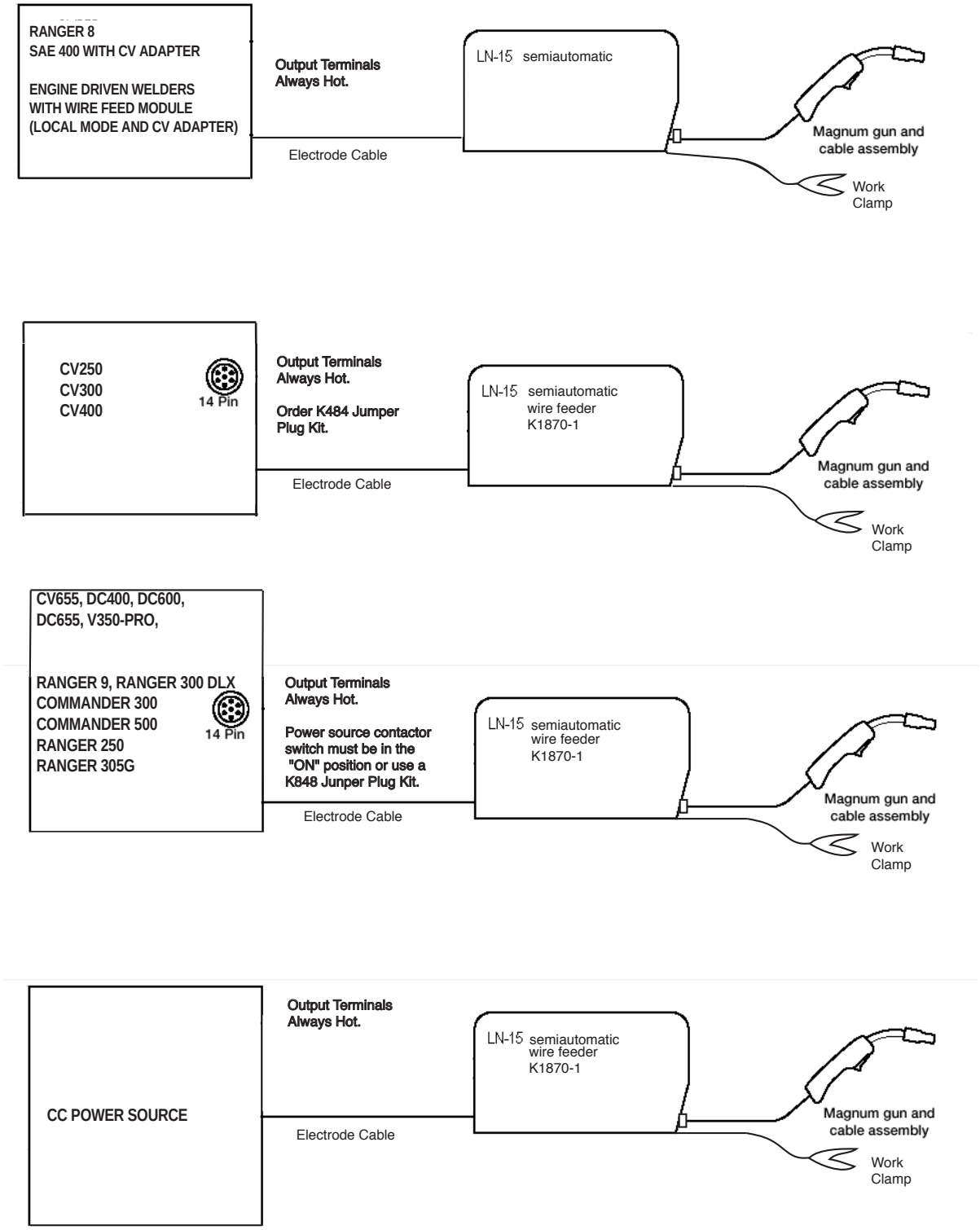

Although a constant voltage (CV) power source is recommended for best results with Innershield® and gas metal arc (GMAW) open arc welding, satisfactory general purpose welding may be obtained using the LN-15™ with a constant current (CC) power source for non-critical commercial quality mild steel welding applications.

Return to Section TOC
Return to Master TOC

GUN AND CABLE ASSEMBLIES

A variety of Lincoln 10' (3.0m) or 15' (4.6m) gun and cable assemblies are available for use with the LN-15™, including the Magnum™ models for GMAW, K126 or K115 models for Innershield®.

The LN-15™ comes factory equipped with a K1500-2 gun connection kit, designed for guns having a Magnum Tweco™ compatible #2-#4 connector. Many other guns can easily be used with the LN-15™ with other K1500 series gun connection kits.

Gun Cable Connection to the Feeder
Lay the cable out straight. Insert the connector on the welding conductor cable into the brass bushing on the front of the wire drive unit. Keep the all mating surfaces clean. Make sure it is fully seated and tighten the thumb screw.

Connect the control cable plug into the 5 pin receptacle on the front panel of the wire feeder.

ELECTRODE POLARITY

The LN-15™ automatically adjusts for positive and negative polarity. When welding with negative polarity procedures, the voltmeter will display a "-" sign; example "-23.6" Volts.

CONNECTIONS

Across the Arc LN-15™ models do not use a control cable.

Table A.2 Trigger Connector J1 (5 Pin)

PIN	Lead #	Function
A	556	Trigger
B	-	Not used
C	554	Trigger/ 83% Procedure ground
D	555	83% Procedure
E	554	Trigger/ 83% Procedure ground

PROCEDURE TO INSTALL DRIVE ROLLS AND WIRE GUIDES

⚠ WARNING

- **Turn off input power at the welding power source before installation or changing drive roll and/or wire guides.**
- **Do not touch electrically live parts 0such as the wire drive or internal wiring.**
- **When feeding with the gun trigger, the electrode and wire drive mechanism are "hot" to work and ground and could remain energized several seconds after the gun trigger is released.**
- **Only qualified personnel should perform this operation.**

---

1. Turn OFF the welding power source.
2. Open the LN-15™ case and then release the idle roll pressure arm.
3. Remove the outer wire guide by turning the knurled thumbscrews counter-clockwise to unscrew them from the feed plate.
4. Rotate the triangular shaped drive roll retaining mechanism to unlock the drive rolls and remove the drive rolls.

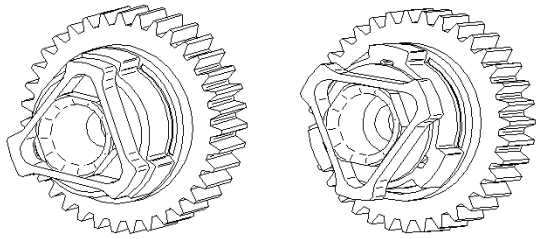

UNLOCKED POSITION LOCKED POSITION

5. Remove the inner wire guide.
6. Insert the new inner wire guide, groove side out, over the two locating pins in the feed plate.
7. Install a drive roll on each hub assembly and lock by rotating the triangular drive roll retaining mechanism.
8. Install the outer wire guide by aligning it with the pins and tightening the knurled thumbscrews.
9. Close the idle arm and engage the idle roll pressure arm. Adjust the pressure appropriately.

FEEDING WIRE ELECTRODE

⚠ WARNING

• ELECTRIC SHOCK CAN KILL.

• When feeding electrode with the gun trigger, the electrode and wire drive mechanism are always "hot" to work and ground and could remain "hot" several seconds after the gun trigger is released.

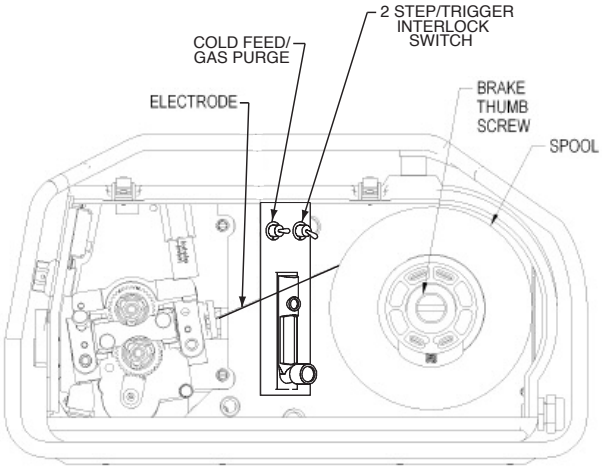

1. Turn the reel or spool until the free end of the electrode is accessible.

2. While tightly holding the electrode, cut off the bent end and straighten the first 6" (15 cm). Cut off the first 1" (2.5 cm). If the electrode is not properly straightened, it may not feed or may jam.

3. Insert the free end through the incoming guide bushing.

4. Press the Cold Feed switch and push the electrode into the drive roll.

5. Feed the electrode through the gun.

6. Adjust the brake tension with the thumbscrew on the spindle hub, until the reel turns freely but with little or no overrun when the wire feeding stops. Do not over tighten.

Return to Section TOC
Return to Master TOC

NOTES

A-8

Return to Section TOC
Return to Master TOC
Return to Section TOC
Return to Master TOC
Return to Section TOC
Return to Master TOC
Return to Section TOC
Return to Master TOC

TABLE OF CONTENTS
- OPERATION SECTION -

Return to Master TOC

Operation .....Section B

Safety Precautions B-2
General Description B-3
Duty Cycle.....B-3
Operational Features and Controls.....B-3
Case Front Controls B-4
Power-up Sequence.....B-5
CV/CC Mode.....B-6
WFS Units.....B-6
Internal Controls.....B-6
Cold/Feed/Gas Purge Switch.....B-7
Two Step Trigger Interlock.....B-8
Constant Current Operation.....B-9
Setting Wire Feed Speed B-10
Making a Weld.....B-11

Return to Section TOC
Return to Master TOC

SAFETY PRECAUTIONS

READ AND UNDERSTAND ENTIRE SECTION BEFORE OPERATING MACHINE.

⚠ WARNING

- ELECTRIC SHOCK CAN KILL. Unless using COLD FEED feature, when feeding with gun trigger, the electrode and drive mechanism are always electrically energized and could remain energized several seconds after the welding ceases..
- Do not attach the work clip to the roll cage or bottom skids. The work clip is energized any time the output of the welding power source is "ON", even when the feeder is not welding.
- Do not touch electrically live part or electrode with skin or wet clothing.
- Insulate yourself from work and ground.
- Always wear dry insulating gloves.
- The serviceability of a product or structure utilizing the LN-15™ wire feeder is and must be the sole responsibility of the builder/user. Many variables beyond the control of The Lincoln Electric Company affect the results obtained in using the LN-15™ wire feeder. These variables include, but are not limited to, welding procedure, plate chemistry and temperature, weldment design, fabrication methods and service requirements. The available range of the LN-15™ wire feeder may not be suitable for all applications, and the builder/user is and must be solely responsible for welding settings.

- FUMES AND GASSES can be dangerous.
- Keep your head out of fumes.
- Use ventilation or exhaust at the arc, or both, to remove fumes and gases from breathing zone and general area.

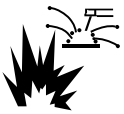

- WELDING SPARKS can cause fire or explosion.
- Keep flammable material away.

ARC RAYS can burn.

- Wear eye, ear and body protection.

SEE ADDITIONAL WARNING INFORMATION UNDER ARC WELDING SAFETY PRECAUTIONS AND IN THE FRONT OF THIS OPERATING MANUAL.

GRAPHIC SYMBOLS THAT APPEAR ON THIS MACHINE OR IN THIS MANUAL

→	INPUT POWER
|	ON
○	OFF
	WIRE FEEDER
+	POSITIVE OUTPUT
—	NEGATIVE OUTPUT
	INPUT POWER
⎓	DIRECT CURRENT
U_0	OPEN CIRCUIT VOLTAGE
U_1	INPUT VOLTAGE
U_2	OUTPUT VOLTAGE
I_1	INPUT CURRENT
I_2	OUTPUT CURRENT
⏚	PROTECTIVE GROUND
⚠	WARNING OR CAUTION

Return to Section TOC
Return to Master TOC

GENERAL DESCRIPTION

The LN-15™ is a light weight, portable, durable semi-automatic wire feeder.

The LN-15™ accommodates spools 8" (200mm) diameter up to 4" (100mm) wide.

The domestic feeders comes factory equipped with a K1500-2 Magnum Tweco-compatible style #2-#4 gun bushing. Other K1500 series gun bushings are available as field installed options. European models are factory equipped with a Fast-Mate adapter.

The wire drive is capable of operating in either a "CV" or "CC" mode. A constant voltage (CV) power source is recommended for flux-cored arc welding (FCAW) and gas metal arc welding (GMAW) to obtain code quality results. However, the LN-15™ may also be used with a constant current (CC) power source to obtain passable results for non-critical quality applications.

The “dual procedure” mode drops the WFS to 83% of the original set point. The voltage setting remains the same.

- Burn-back is adjustable from 0.0 to 0.25 seconds, with a default of 0.00 seconds.
- The preflow time is adjustable from 0.00 to 2.50 seconds, with a default of 0.00 seconds.
- The postflow time is adjustable from 0.0 to 10.0 seconds, with a default setting of 0.0 seconds.

The Across the Arc Model is capable of operating with Lincoln DC power sources supplying between 15VDC and 110 VDC. Simply attach the work clip to the work piece and then connect the LN-15™ to the electrode cable to the power source and it is ready to weld.

An internal contactor in Across the Arc Models energizes the electrode output in response to the gun trigger.

DUTY CYCLE

The LN-15™ wire feeders are intended for semi-automatic use. The maximum rating of the LN-15™ is based upon a 60% duty cycle; welding 6 minutes of welding followed by 4 minutes of idling within a 10 minute period.

RECOMMENDED PROCESSES

The LN-15™ wire drive feeds electrode for various processes as follows:(See Table B.1)

The Across the Arc Model is suitable for GMAW, GMAW-Pulse and FCAW semi-automatic applications within the rated duty cycle.

PROCESS LIMITATIONS

- The across the arc model is not recommended for spot or stitch welding.
- The across the arc model is not recommended for GMAW-STT, SAW, SMAW, GTAW or CAG.

EQUIPMENT LIMITATIONS

Codes 10864, 10865
- The LN-15™ cannot be used with K489-7 Fast Mate Gun receiver bushing or K1500-4 gun adapter bushing.

Codes 11033 and higher
- The LN-15™ cannot be used with the K1500-4 gun adapter bushing.

OPERATIONAL FEATURES AND CONTROLS

- Built in flow meter for adjusting shielding gas.
- Cold Feed/Gas Purge switch.
- 2 step/Trigger Interlock switch (codes 11033 and above only.)
- Digital wire feed speed control.
- Digital display of welding voltage.
- Adjustable preflow and postflow times
- Adjustable burnback times.
- On/Off switch (codes 11033 and above only.)

TABLE B.1

Process	Wire Diameter Range	Wire Feed Speed Range
GMAW	0.023 - 0.052" (0.6 - 1.3 mm)	50 - 700 ipm (1.3 - 17.8 m/minute)
FCAW	0.045 - 0.052" (1.2 - 1.3 mm)	50 - 700 ipm (1.3 - 17.8 m/minute)
FCAW	1/16 - 5/64" (1.6 - 2.0 mm)	50 - 400 ipm (1.3 - 10.2 m/minute)

Return to Section TOC
Return to Master TOC

CASE FRONT CONTROLS (See Figure B.1) ACROSS THE ARC MODEL

1. **WIRE FEED SPEED DISPLAY-**The Wire Feed Speed display shows the rate the LN-15™ will feed electrode during welding. The default WFS units for domestic models are inches/minute and can be changed to meters/minute through the configuration menu. The default WFS units for the European models are m/min. The wire feed speed is calibrated to within ±2%.

2. **VOLTAGE DISPLAY-**The voltage display shows the average arc voltage during welding. A minus sign "-" appears when welding with electrode negative welding procedures. While welding, an LED will illuminate below the voltage display. After welding, the average voltage will continue to be shown for 5 seconds after the end and the LED will flash. of the weld. When not welding, the display shows "- - - ". The voltage is calibrated to ±2% over a range of 10 to 45 volts.

The voltage display is not a "preset" voltage.

Refer to the examples from Figure B.1a.

FIGURE B.1a

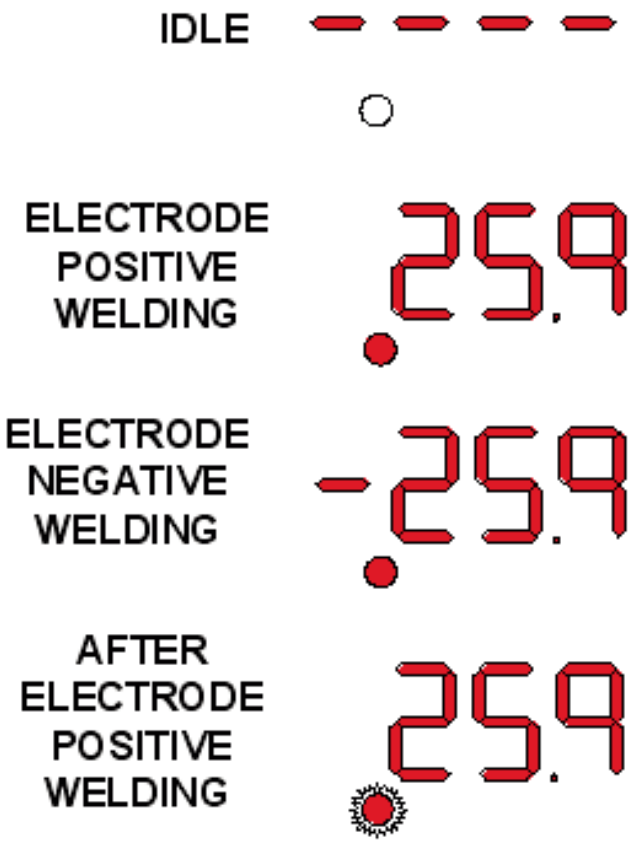

3. **WIRE FEED SPEED KNOB-**The Wire Feed Speed knob is a 3-3/4 turn potentiometer that adjusts of the rate of feeding electrode. The wire feed speed range is 50 - 700 inches/min (1.3 - 17.8 m/min)

4. **TRIGGER CONNECTOR-**5 Pin Receptacle is used to activate the Magnum Gun Switch.

5. **CONNECTOR BUSHING-**This connection is for welding conductor cable assembly.

6. **WORK CLIP LEAD-**This lead must be connected directly to the work using the spring clip.

7. **ON / OFF SWITCH-**For codes 11033 and above: The ON / OFF Switch turns power on and off to the wire feeder.

83% PROCEDURE

The LN-15™ supports a special "dual procedure" mode. When activated, the wire feed speed is reduced to 83% of the set value, but no less than 50 inches/minute (1.27 m/min). The 83% procedure is most commonly used during pipe and out of position welding. Requires Magnum 400 Dual Procedure Gun Equivalent.

FIGURE B.1

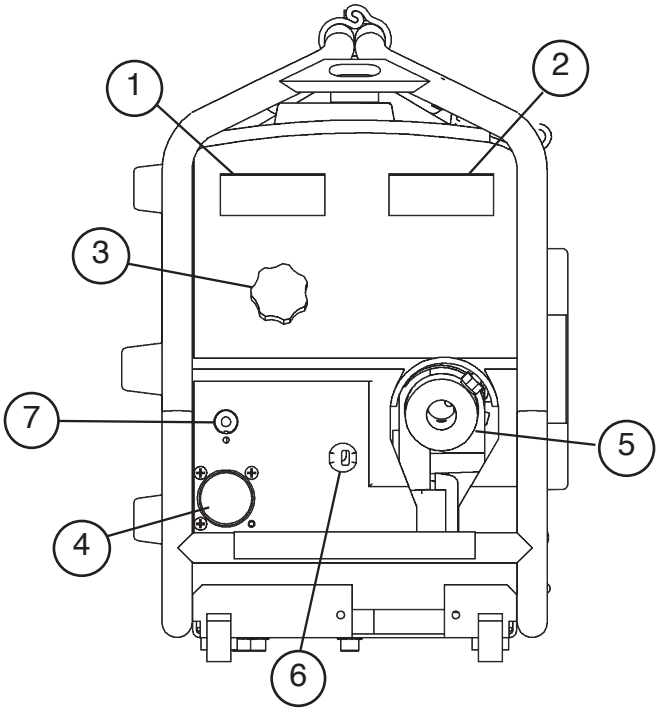

Return to Section TOC
Return to Master TOC

LN-15™ POWER-UP SEQUENCE

NORMAL POWER-UP DISPLAY

When power is first applied to the LN-15™, the display will momentarily show set-up information. For example, it may show **"CV"** and **"HI"**, indicating operation from a **CV** power source and the wire drive is configured for the high speed gear. Because of limitations in the display, **"CV" will appear as "Cu"**.

After a brief moment, the LN-15™ will then display the WFS and "---". No voltage is displayed until the trigger is pressed.

PREFLOW, POSTFLOW AND BURNBACK TIMES

Preflow, Postflow and Burnback times are all adjustable on the LN-15™. The LN-15™ is factory set with all the times set to 0.0 seconds.

- The burnback time is adjustable from 0.00 to 0.25 seconds.
- The preflow time is adjustable from 0.0 to 2.50 seconds.
- The postflow time is adjustable from 0.0 to 10.0 seconds.

CHANGING PREFLOW, POSTFLOW OR BURNBACK TIMES:

1. Enter the “Press Spin” Set-Up Mode:
   While the power to the LN-15™ is off, activate and hold the GAS PURGE switch (Down Position). Turn on power to the LN-15™, and continue to hold the GAS PURGE switch until the LN-15™ displays

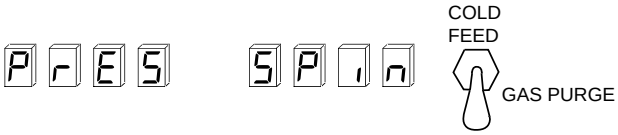

   "Press Spin". Release the GAS PURGE switch. The LN-15™ is now in the "Press Spin" set-up mode. If after 15 seconds no other action is taken, the LN-15™ will then revert to normal operation.

2. Rotate the WFS knob until the desired timer is displayed.

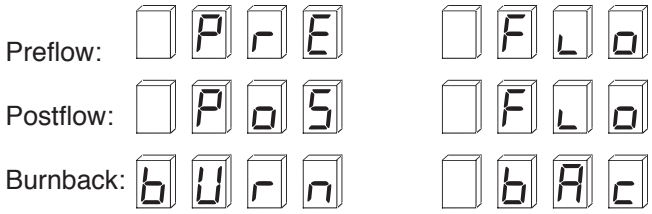

3. Activate and then release the GAS PURGE switch to select the timer. The time will then display in the right hand side of the display. Example:

4. Rotate the WFS knob to adjust the time to the new setting.

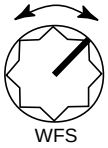

5. Press the GAS PURGE switch again to save the setting. The LN-15™ will then return to the original "Press Spin" mode in step 1.
6. To exit the "Press Spin" set-up mode, turn off power to the LN-15™, or simply wait 15 seconds and the LN-15™ will enter normal operation.

WELDING MODE CV/CC MODE AND WFS UNITS

The CV/CC mode and WFS units are all readily changed during the power-up sequence. The LN-15™ is factory set for "CV" welding power sources and "inches per minute" for the wire feed speed units.

- The CV/CC mode is selectable for either CV for Constant Voltage power sources and CC for Constant Current power sources. Use CV power sources when making critical welds.
- The WFS units is selectable for either in/min and m/min.

CHANGING THE CV/CC MODE, OR WFS UNITS:

1. Enter the “Press Spin” Set-Up Mode:
   While the power to the LN-15™ is off, activate and hold the GAS PURGE switch (Down Position). Turn on power to the LN-15™, and continue to hold the GAS PURGE switch until the LN-15™ displays "Press spin". Release the GAS PURGE switch.
   The LN-15™ is now in the "Press Spin" set-up mode. If after 15 seconds no other action is taken, the LN-15™ will then revert to normal operation.

Rotate the WFS knob until the desired parameter is displayed.

CV/CC Mode: CU CC

WFS Units: US Eur

2. Activate and release the GAS PURGE switch to select the parameter. The present value will then display in the right hand side of the display. Example:

USE US

3. Rotate the WFS knob to change the parameter setting.

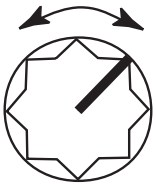

WFS

CV/CC MODE:

- "CU" for Constant Voltage power sources
- "CC" for Constant Current power sources

WFS UNITS:

- "US" for in/min
- "Eur" for m/min

4. Press the GAS PURGE switch to save the setting. The LN-15™ will then return to the original "Press Spin" mode in step 1.

5. To exit the "Press Spin" set-up mode, turn off power to the LN-15™, or simply wait 15 seconds and the LN-15™ will enter normal operation.

INTERNAL CONTROLS (Figure B.2)

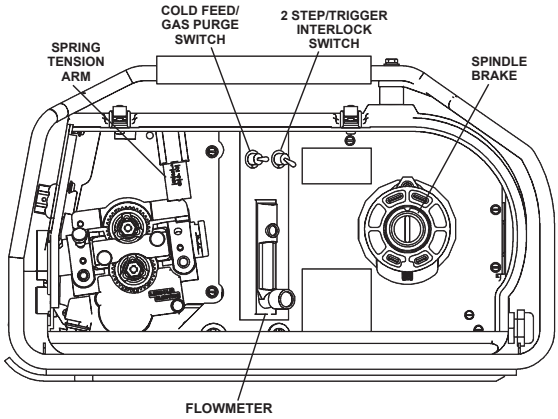

SPRING TENSION ARM

The pressure arm controls the amount of force the drive rolls exert on the wire. Proper adjustment of both pressure arm gives the best welding performance. For best results, set both pressure arms to the same value.

Set the pressure arm as follows (See Figure B.2a):

Aluminum wires	between 1 and 3
Cored wires	between 3 and 4
Steel, Stainless wires	between 4 and 6

Figure B.2a

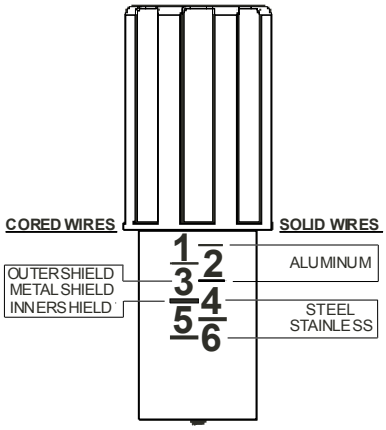

Return to Section TOC
Return to Master TOC

Return to Section TOC
Return to Master TOC

WIRE DRIVE CONFIGURATION

(See Figure B..2b)

Changing the Gun Receiver Bushing

ELECTRIC SHOCK can kill.

- **Turn the input power OFF at the welding power source before installation or changing drive rolls and/or guides.**
- **Do not touch electrically live parts.**
- **When inching with the gun trigger, electrode and drive mechanism are "hot" to work and ground and could remain energized several seconds after the gun trigger is released.**
- **Only qualified personnel should perform maintenance work.**

Tools required:

- 1/4" hex key wrench.

Note: Some gun bushings do not require the use of the thumb screw.

1. Turn power off at the welding power source.
2. Remove the welding wire from the wire drive.
3. Remove the thumb screw from the wire drive.
4. Remove the welding gun from the wire drive.
5. Loosen the socket head cap screw that holds the connector bar against the gun bushing.
   Important: Do not attempt to completely remove the socket head cap screw.
6. Remove the outer wire guide, and push the gun bushing out of the wire drive. Because of the precision fit, light tapping may be required to remove the gun bushing.
7. Disconnect the shielding gas hose from the gun bushing, if required.
8. Connect the shielding gas hose to the new gun bushing, if required.
9. Rotate the gun bushing until the thumb screw hole aligns with the thumb screw hole in the feed plate. Slide the gun receiver bushing into the wire drive and verify the thumb screw holes are aligned.
10. Tighten the socket head cap screw.
11. Insert the welding gun into the gun bushing and tighten the thumb screw.

COLD FEED/GAS PURGE SWITCH

Cold Feed and Gas Purge are combined into a single spring centered toggle switch.

To activate Cold Feeding, hold the switch in the UP position. The wire drive will feed electrode but neither the power source nor the gas solenoid will be energized. Adjust the speed of cold feeding by rotating the WFS knob. Cold feeding, or "cold inching" the electrode is useful for threading the electrode through the gun.

FIGURE B.2b

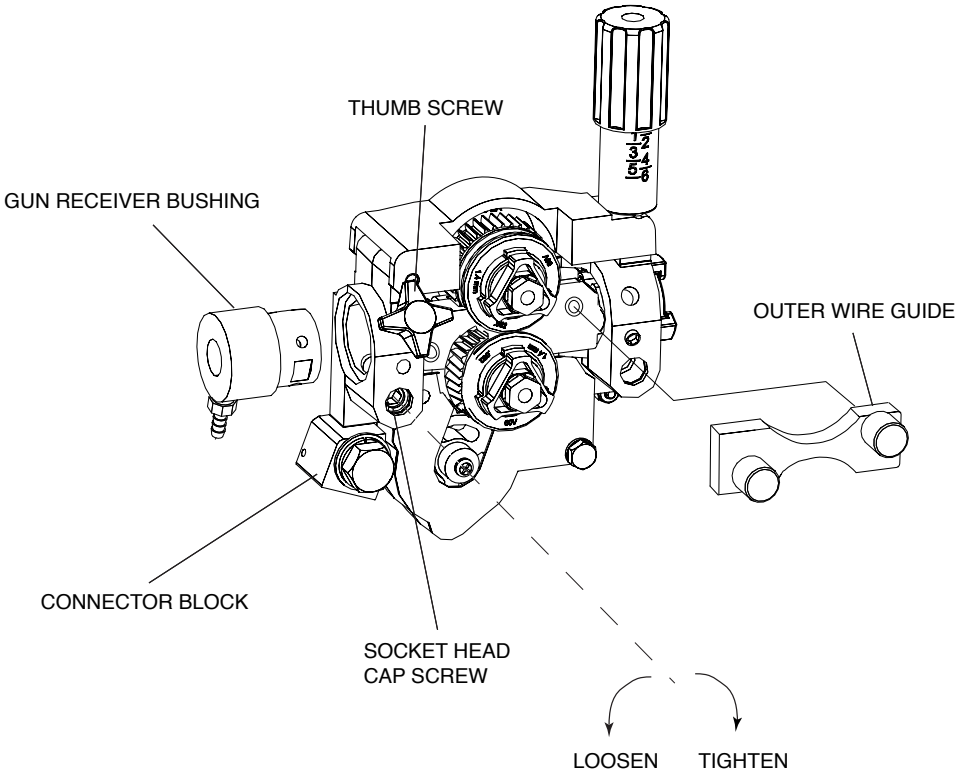

Hold with toggle switch in the DOWN position to activate Gas Purge and let the shielding gas flow. The gas solenoid valve will energize but neither the power source output nor the drive motor will be turned on. The Gas Purge switch is useful for setting the proper flow rate of shielding gas. Flow meters should always be adjusted while the shielding gas is flowing.

2 STEP - TRIGGER INTERLOCK SWITCH

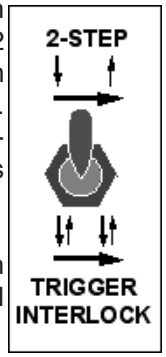

The 2 Step - Trigger Interlock switch changes the function of the gun trigger. 2 Step trigger operation turns welding on and off in direct response to the trigger. Trigger Interlock operation allows welding to continue when the trigger is released for comfort on long welds.

Place the toggle switch in the UP position for 2 Step operation or in the DOWN position for Trigger Interlock operation.

2 Step Trigger

2 Step trigger operation is the most common. When the gun trigger is pulled, the welding power source energizes the electrode output and the wire feeder feeds wire for welding. The power source and wire feeder continue welding until the trigger is released.

Trigger Interlock

Trigger Interlock operation provides for operator comfort when making long welds. When the gun trigger is first pulled, the welding power source energizes the output and the wire feeder feeds wire for welding. The gun trigger is then released while the weld is made. To stop welding, the gun trigger is pulled again, and when it is released the welding power source output turns off and the wire feeder stops feeding wire.

⚠ CAUTION

If the arc goes out while welding with trigger interlock operation, the electrode output from the welding power source remains energized and the wire feeder will continue to feed wire until the gun trigger is again pulled and then released.

FLOW METER

The flowmeter shows the flow rate of shielding gas and has a valve to adjust the flow. The flow meter is calibrated for CO2, Ar, and CO2/Ar blends. The middle of the ball indicates the flow rate of shielding gas.

Adjust the flow rate by turning the valve at the bottom of the meter. Most weld procedures require 25-40 scfh (11.8 - 18.9 lpm) for sufficient shielding gas coverage. Gun angle, nozzle diameter, joint configuration and wind conditions may effect the amount of shielding gas required.

SCFH	Liter/Min.
10	4.7
20	9.4
30	14.2
40	18.9
50	23.6
60	28.3
70	33.1
80	37.8

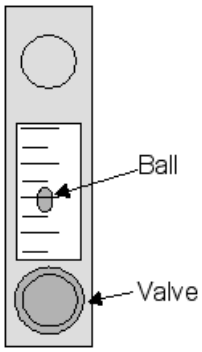

SPINDLE BRAKE

Adjust the spindle brake tension to allow the spool to spin freely, yet have enough resistance for little or no overrun when wire feeding is stopped.

SHIELDING GAS CONNECTION

⚠ WARNING

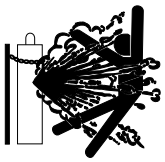

CYLINDER may explode if damaged.

- **Keep cylinder upright and chained to support.**
- **Keep cylinder away from areas where it may be damaged.**
- **Never lift welder with cylinder attached.**
- **Never allow welding electrode to touch cylinder.**
- **Keep cylinder away from welding or other live electrical circuits.**

⚠ WARNING

- **BUILD UP OF SHIELDING GAS MAY HARM HEALTH OR KILL.**
- **Shut off shielding gas supply when not in use.**
- **See American National Standard Z-49.1, "Safety in Welding and Cutting" Published by the American Welding Society.**

Customer must provide a cylinder of shielding gas, a pressure regulator, a flow control valve and a hose from the flow valve to the gas inlet fitting of the LN-15™.

Connect a supply hose from the gas cylinder flow valve outlet to the 5/8-18 female inert gas fitting on the back of the LN-15™.

Return to Section TOC
Return to Master TOC

Return to Section TOC
Return to Master TOC

CONSTANT CURRENT OPERATION

(See Figure B.3)

⚠ CAUTION

Lincoln Electric does NOT recommend constant current semiautomatic welding for applications which need to meet specified weld metal chemical or mechanical property requirements or weld quality requirements.

Most semiautomatic welding processes perform better using constant voltage power sources.

Welding codes usually do not address the power source selection or specifically, whether the welding process is to be operated in the constant voltage or constant current mode. Instead, codes typically specify limitations on the current, voltage, heat input and preheat temperature based on the material to be welded. The intention is to assure that proper weld material properties will develop.

Welding is sometimes performed using constant current power sources. The operation can be more convenient because it may allow the use of an existing stick (SMAW) power source and the power source can be placed at a distant location without any provision for adjusting the output settings.

For constant current operation, the power source is set to deliver the specified current. The power source regulates this current regardless of changes in the welding circuit, including cable length, electrode diameter, wire feed speed, contact tip to work distance, etc.

Changes in the wire feed speed (WFS) or contact tip to work distance (CTWD) affect the arc voltage when constant current power sources are used. Lowering the wire feed speed raises the voltage, raising the wire feed speed lowers the voltage. Lengthening the contact tip to work distance raises the voltage, shortening the contact tip to work distance lowers the voltage.

If the contact tip to work distance is properly maintained, a satisfactory operating voltage range may be achieved, and a sound weld may result. However, when a welder uses a longer contact tip to work distance, an arc-sensing wire feeder compensates by increasing the wire feed speed to regulate the voltage. Even if the voltage and current remain unchanged, the increased wire feed speed may result in a deposition rate well beyond the specified range of the electrode. Under these conditions, the specified weld metal properties may not be achieved.

Constant voltage power sources deliver large current surges to stabilize the arc when the electrode is shorted or the arc length is very short. However, a constant current power source does not provide such a response to stabilize the arc. It may be difficult to achieve required weld metal properties, or to achieve the required quality of welds needed to pass nondestructive tests, when such welds are made under constant current operation.

FIGURE B.3

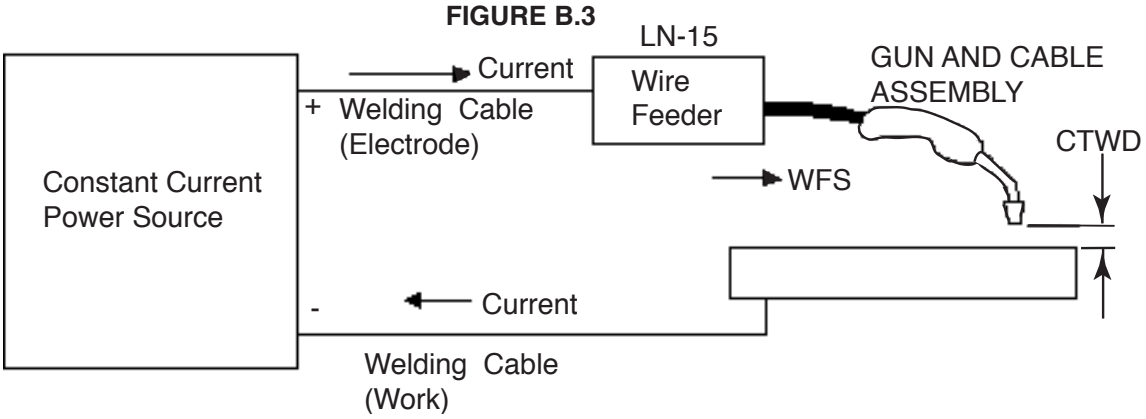

Return to Section TOC
Return to Master TOC

SETTING ARC SENSING WIRE FEED SPEED FOR CONSTANT CURRENT OPERATION

When using a constant current (formerly variable voltage) power source, welding performance is improved using arc sensing wire feed speed (CC operation). In this wire feed mode the wire speed increases if arc voltage increases, and decreases if arc voltage decreases, but remains constant at any specific voltage level.

The LN-15™ permits accurate presetting of the desired wire feed speed, for the desired arc voltage to be used, by setting the Wire Feed Speed in the following manner before welding:

a. Activate press and spin during power up and change to the CC mode. See “Changing the CV/CC mode or WFS units” in this Operation Section.

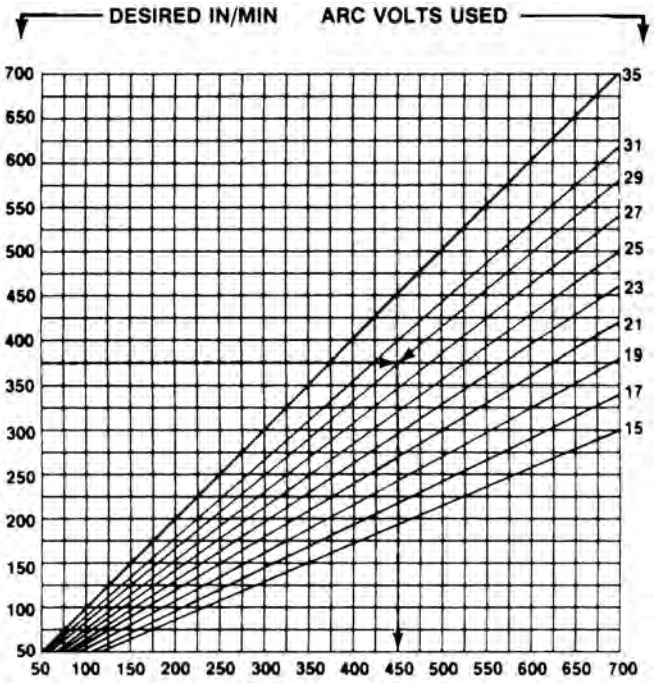

FIGURE B.4 CC WIRE SPEED SETTING

b. Referring to the graph located above the Mode switch (also shown in Figure B.4):

1. Select the horizontal line representing the DESIRED IN/MIN. for the welding procedure. (See example arrow line for 375 in/min.)
2. Select the diagonal line representing the ARC VOLTS to be used for the welding procedure. (See example arrow line for 29 volts.)
3. Determine the vertical line representing the CC WIRE SPEED SETTING where the above two lines cross. (See example arrow line for 450.)

c. Adjust the WFS display to the value determined in Step (3) above (450 for example used).

The wire will feed at the DESIRED IN/MIN speed when the welding power source is set to the arc voltage to be used for the weld procedure (375 in/min. at 29V for example used).

The CC wire speed setting graph is shown in TABLE B.1, giving the Wire Speed dial setting required for the DESIRED IN/MIN and ARC VOLTS used for the welding procedures:

TABLE B.1 CC WIRE SPEED SETTING

Desired In/Min	Arc Volts Used									
	16	18	20	22	24	26	28	30	32	34
50	109	97	88	80	73	67	63	58	55	51
60	131	117	105	95	88	81	75	70	66	62
70	153	136	123	111	102	94	88	82	77	72
80	175	156	140	127	117	108	100	93	88	82
90	197	175	158	143	131	121	113	105	98	93
100	219	194	175	159	146	135	125	117	109	103
110	241	214	193	175	160	148	138	128	120	113
120	263	233	210	191	175	162	150	140	131	124
130	284	253	228	207	190	175	163	152	142	134
140	306	272	245	223	204	188	175	163	153	144
150	328	292	263	239	219	202	188	175	164	154
160	350	311	280	255	233	215	200	187	175	165
170	372	331	298	270	248	229	213	198	186	175
180	394	350	315	286	263	242	225	210	197	185
190	416	369	333	302	277	256	238	222	208	196
200	438	389	350	318	292	269	250	233	219	206
210	459	408	368	334	306	283	263	245	230	216
220	481	428	385	350	321	296	275	257	241	226
230	503	447	403	366	335	310	288	268	252	237
240	525	467	420	382	350	323	300	280	263	247
250	547	486	438	398	365	337	313	292	273	257
260	569	506	455	414	379	350	325	303	284	268
270	591	525	473	430	394	365	338	315	295	278
280	613	544	490	445	408	377	350	327	306	288
290	634	564	508	461	423	390	363	338	317	299
300	656	583	525	477	438	404	375	350	328	309
310	678	603	543	493	452	417	388	362	339	319
320	700	622	560	509	467	431	400	373	350	329
330		642	578	525	481	444	413	385	361	340
340		661	595	541	496	458	425	397	372	350
350		681	613	557	510	471	438	408	383	360
360		700	630	572	526	484	450	420	394	370
380			666	604	554	512	472	444	416	392
400			700	636	584	538	500	466	438	412
420				668	612	566	526	490	460	432
440				700	642	592	550	514	482	452
460					670	620	576	536	504	472
480					700	646	600	560	526	494
500						674	626	584	546	514
520						700	650	606	568	536
540							676	630	590	556
560							700	654	612	576
580								676	634	598
600								700	656	618
620									678	638
640									700	658
660										680
680										700
700										

$$\text{CC Speed Setting} = \frac{\text{Desired IPM}}{\text{Arc Volts}} \times 35$$

Return to Section TOC
Return to Master TOC

MAKING A WELD

The serviceability of a product or structure utilizing the LN-15™ wire feeder is and must be the sole responsibility of the builder/user. Many variables beyond the control of The Lincoln Electric Company affect the results obtained in using the LN-15™ wire feeder. These variables include, but are not limited to, welding procedure, plate chemistry and temperature, weldment design, fabrication methods and service requirements. The available range of the LN-15™ wire feeder may not be suitable for all applications, and the builder/user is and must be solely responsible for welding settings.

- Close the door on the LN-15™.
- Connect the work cable to the metal to be welded. The work cable must make good electrical contact to the work. The work must also be grounded as stated in "Arc Welding Safety Precautions".
- Connect the LN-15™ electrode cable to the power source for the polarity and process to be used. Check that the appropriate power source settings are made for the procedure to be used. (Refer to the power source operating and connection instructions.)
- Place the LN-15™ conveniently near the work area in a safe location to minimize exposure to weld spatter and to avoid sharp bends in the gun cable.
- Connect the LN-15™ work clip to the work.
- Be sure the proper contact tip for the wire size being used is in the gun.
- Turn on the welding power source, as well as the shielding gas supply (if used.)
- Cut the electrode within approximately 3/8" (10mm) of the end of the contact tip for solid wire and within 3/4" (19mm) of the extension guide for cored wire.
- Position the electrode over the joint. The end of the electrode should be slightly off the work.
- Lower welding helmet, close the gun trigger and begin welding. Hold the gun so the contact tip to work distance gives the correct electrical stickout as required for the procedure being used.
- To stop welding, release the gun trigger and the pull the gun away from the work.

NOTES

B-12

Return to Section TOC
Return to Master TOC
Return to Section TOC
Return to Master TOC
Return to Section TOC
Return to Master TOC
Return to Section TOC
Return to Master TOC

TABLE OF CONTENTS
- ACCESSORIES SECTION -

Accessories .....Section C

Factory Installed Equipment C-2
Optional Equipment C-2

Return to Master TOC
Return to Master TOC
Return to Master TOC
Return to Master TOC

Return to Section TOC
Return to Master TOC

FACTORY INSTALLED EQUIPMENT

• K1500-2 Gun Receiver Bushing.

OPTIONAL EQUIPMENT

• K1797-[ ] control cable extensions
• K1798 Adapter Cable for Control Cable to Terminal Strip Power Sources
• K1500-1, -2, -3, -5 Gun Receiver Bushings • Drive Roll Kits

• Drive Roll Kits (Includes drive rolls and guide tube necessary to feed the identified wire size and type.

WIRE TYPE	ELECTRODE SIZE	KP KIT
Steel Wires: (Including stainless steel)	.023-.030" (0.6-0.8mm)	KP1696-030S
	.035" (0.9mm)	KP1696-035S
	.040-.045" (1.0-1.2mm)	KP1696-045S
	.052" (1.4mm)	KP1696-052S
Cored Wires:	.030-.035" (0.8-0.9mm)	KP1697-035C
	.040-.045" (1.0-1.2mm)	KP1697-045C
	.052" (1.4mm)	KP1697-052C
	1/16" (1.6mm)	KP1697-1/16C
	.068" (1.7mm)	KP1697-068
	5/64" (2.0mm)	KP1697-5/64
Aluminum Wires:	.035" (0.9mm)	KP1695-035A
	.040" (1.0mm)	KP1695-040A
	3/64" (1.2mm)	KP1695-3/64A

TABLE OF CONTENTS
- MAINTENANCE SECTION -

Maintenance .....Section D

Routine Maintenance D-2
Periodic Maintenance D-2
Calibration Specification D-2
Major Component Locations D-3

Return to Master TOC
Return to Master TOC
Return to Master TOC
Return to Master TOC

Return to Section TOC
Return to Master TOC

SAFETY PRECAUTIONS

⚠ WARNING

ELECTRIC SHOCK can kill.

- **Do not operate with covers removed.**
- **Turn off power source before installing or servicing.**
- **Do not touch electrically hot parts.**

- **Turn the input power to the welding power source off at the fuse box before working in the terminal strip.**
- **Only qualified personnel should install, use or service this equipment.**

ROUTINE MAINTENANCE

Routine maintenance consists of periodically blowing out the machine, using a low pressure airstream, to remove accumulated dust and dirt from inside the feeder.

PERIODIC MAINTENANCE

- Replace the drive rolls and inner wire guide when they are worn.

- Replace the pig tail if the insulation is cut, abraded or damaged.

CALIBRATION SPECIFICATION

All calibration is factory set on the LN-15™.

To verify the wire feed speed:

- Assemble a .045 (1.2mm) drive roll kit into the LN-15™.
- Load a spool of .045 (1.2mm) electrode and thread the electrode through the wire drive.
- Adjust the wire feed speed to 300 in/min (7.62m/min).
- Press the COLD FEED switch and measure the actual wire feed speed with a calibrated wire feed speed tachometer.
- The measured wire feed speed should be within 2% of the set value.

To verify the voltage display:

- Set the welding power source and LN-15™ to a CV procedure that gives steady "spray" transfer in the arc.
- While a weld is being made, measure the voltage from the feed plate to work.
- The displayed voltage on the LN-15™ should be within 2% of the measured value.

Return to Section TOC
Return to Master TOC

FIGURE D.1 – MAJOR COMPONENT LOCATIONS

1. Molded Case Assembly
2. Control Box Assembly
3. Control Box Cover Assembly
4. Wire Drive & Contactor Assembly

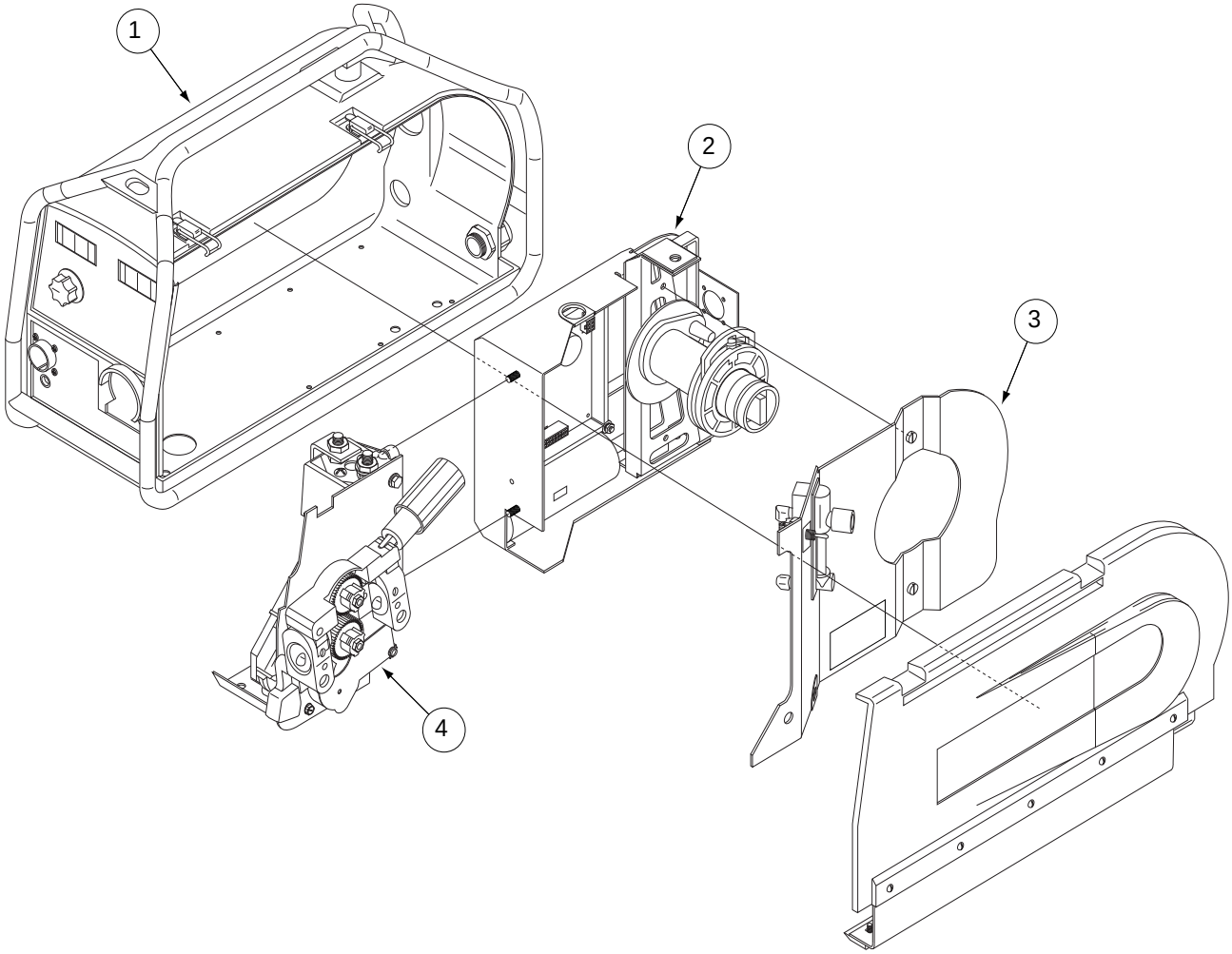

NOTES

D-4

Return to Section TOC
Return to Master TOC
Return to Section TOC
Return to Master TOC
Return to Section TOC
Return to Master TOC
Return to Section TOC
Return to Master TOC

TABLE OF CONTENTS
- THEORY OF OPERATION SECTION -

Return to Master TOC

Theory of Operation ..... Section E

General Description E-2
Input Power E-2
Trigger & Control Circuits E-3
Wirefeed Speed Control & Feedback E-4
Display Board E-5

FIGURE E.1 – LN-15™ BLOCK LOGIC DIAGRAM

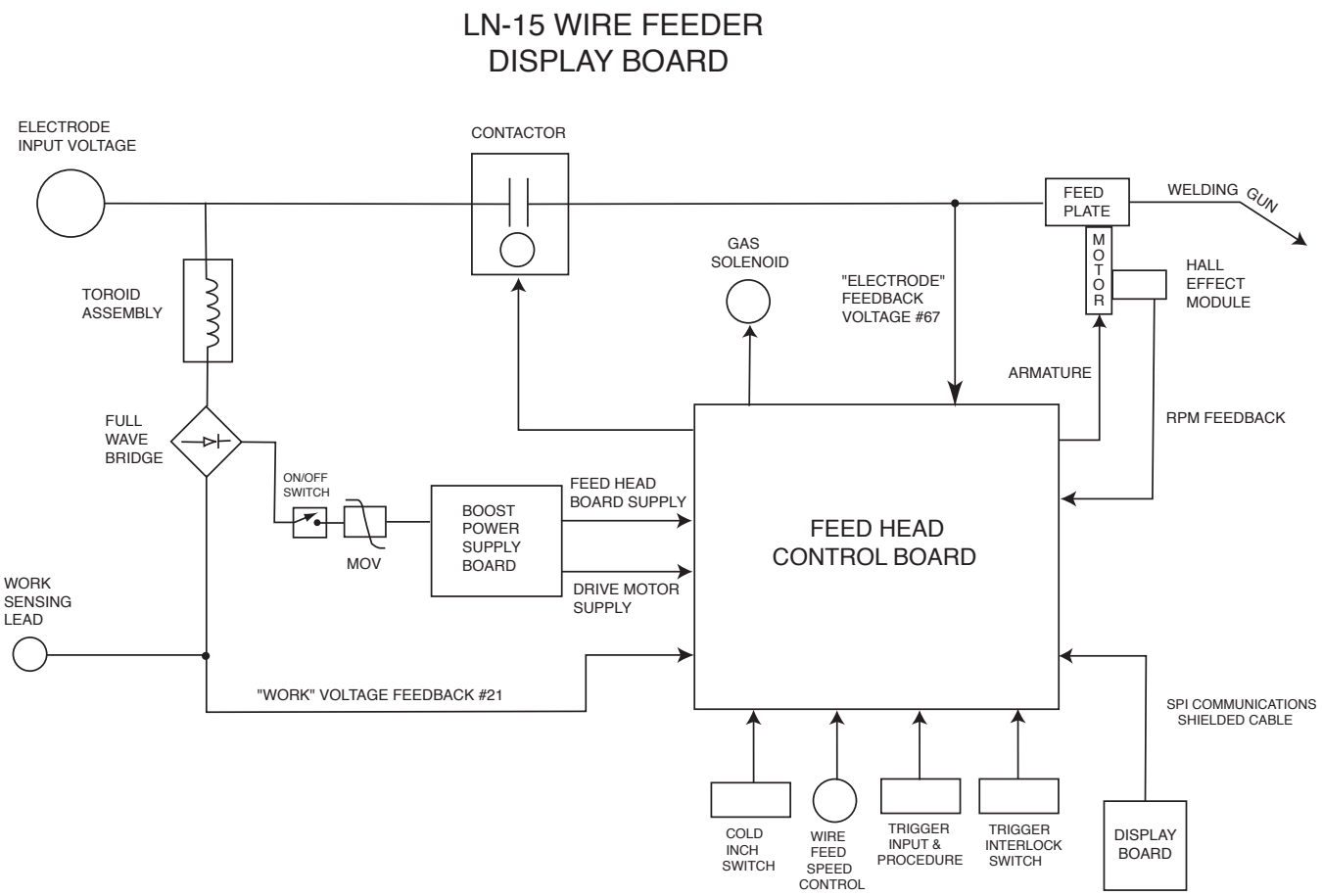

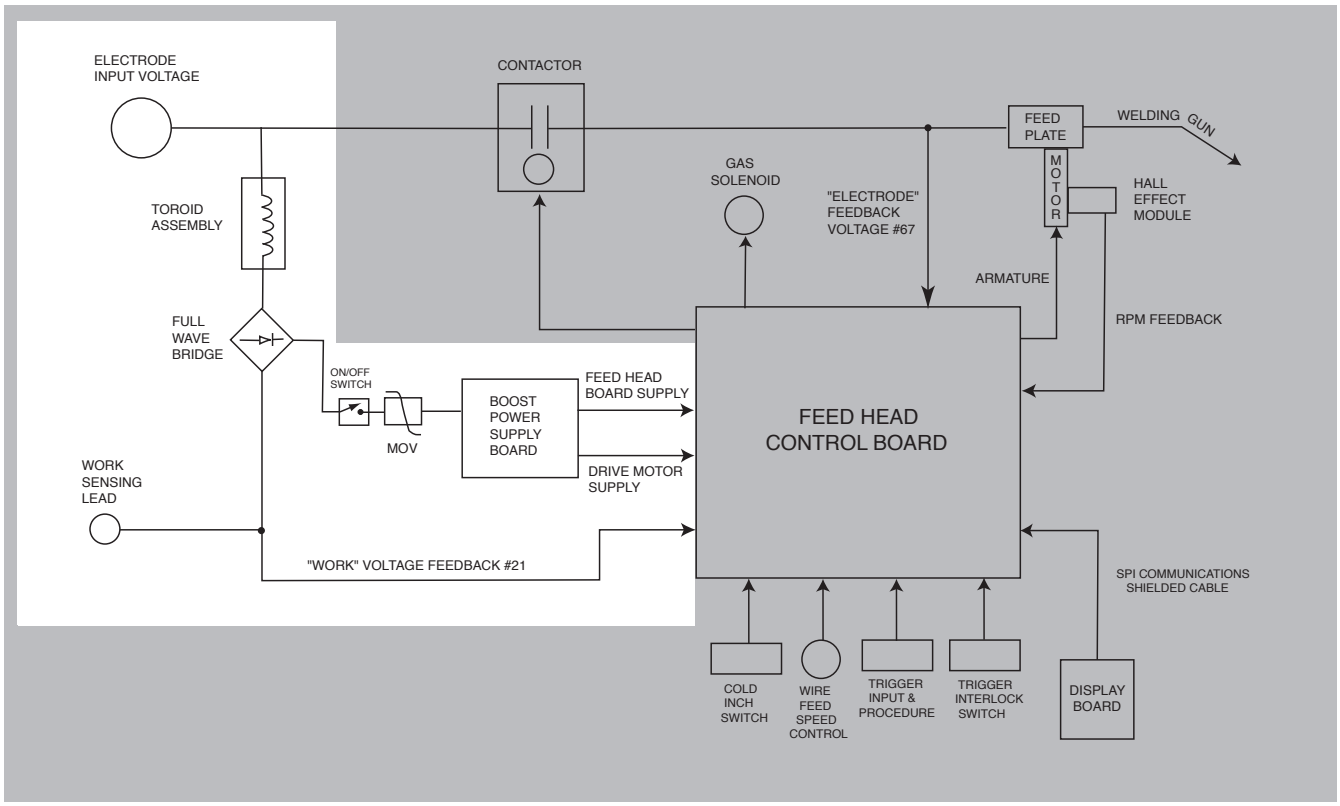

GENERAL DESCRIPTION

The LN-15™ is a lightweight portable semi-automatic wire feeder. The "Across the Arc" model is capable of operating with Lincoln DC power sources supplying between 15VDC to 110VDC. The LN-15™ is designed for semi-automatic use and has a 60% duty cycle rating.

By attaching the work clip to the work piece and the LN-15™ electrode cable to the Lincoln power source the LN-15™ is ready to feed wire and weld. The LN-15™ can be connected for either welding polarity without any changes to the LN-15™. When the gun trigger is activated and wire feeds and an internal contactor energizes the electrode output.

The wire drive is capable of operating in either the constant voltage or the constant current mode. A constant current voltage power source is recommended for flux-cored arc welding (FCAW) and gas metal arc welding (GMAW) to obtain code quality results.

For non-critical quality applications a constant current power source may be used.

The LN-15™ comes factory equipped with a K1500-2 Tweco style #2-#4 gun bushing.

The "dual procedure" mode drops the wire feed speed 83% from the original set point. The voltage setting remains the same.

INPUT POWER

The DC voltage supplied from the power source is applied to the LN-15™ through the electrode cable and the work sensing lead. The voltage is applied to the full wave bridge through a toroid assembly. When the ON/OFF switch is put in the ON position the positive DC voltage from the bridge is applied to the Boost/Power Supply board through an M.O.V. assembly. This M.O.V. is needed to protect the Boost/Power board from inductive energy stored in the welding cables.

The Boost/Power Board takes the weld voltage and boosts it to 80VDC or the actual arc voltage being applied. (Whichever is greater). The outputs of the Boost/Power board are two separate 80VDC+ supply voltages. One of these is utilized and regulated by the Feed Head Control board to power the wire drive motor. The other 80VDC supply is regulated to create several plus and minus regulated DC supplies. These +/-15VDC and +/-5VDC supplies are used to power the electronics within the Feed Head board and other components in the LN-15™ such as the gas solenoid.

Return to Section TOC
Return to Master TOC

FIGURE E.3 – TRIGGER & CONTROL CIRCUITS

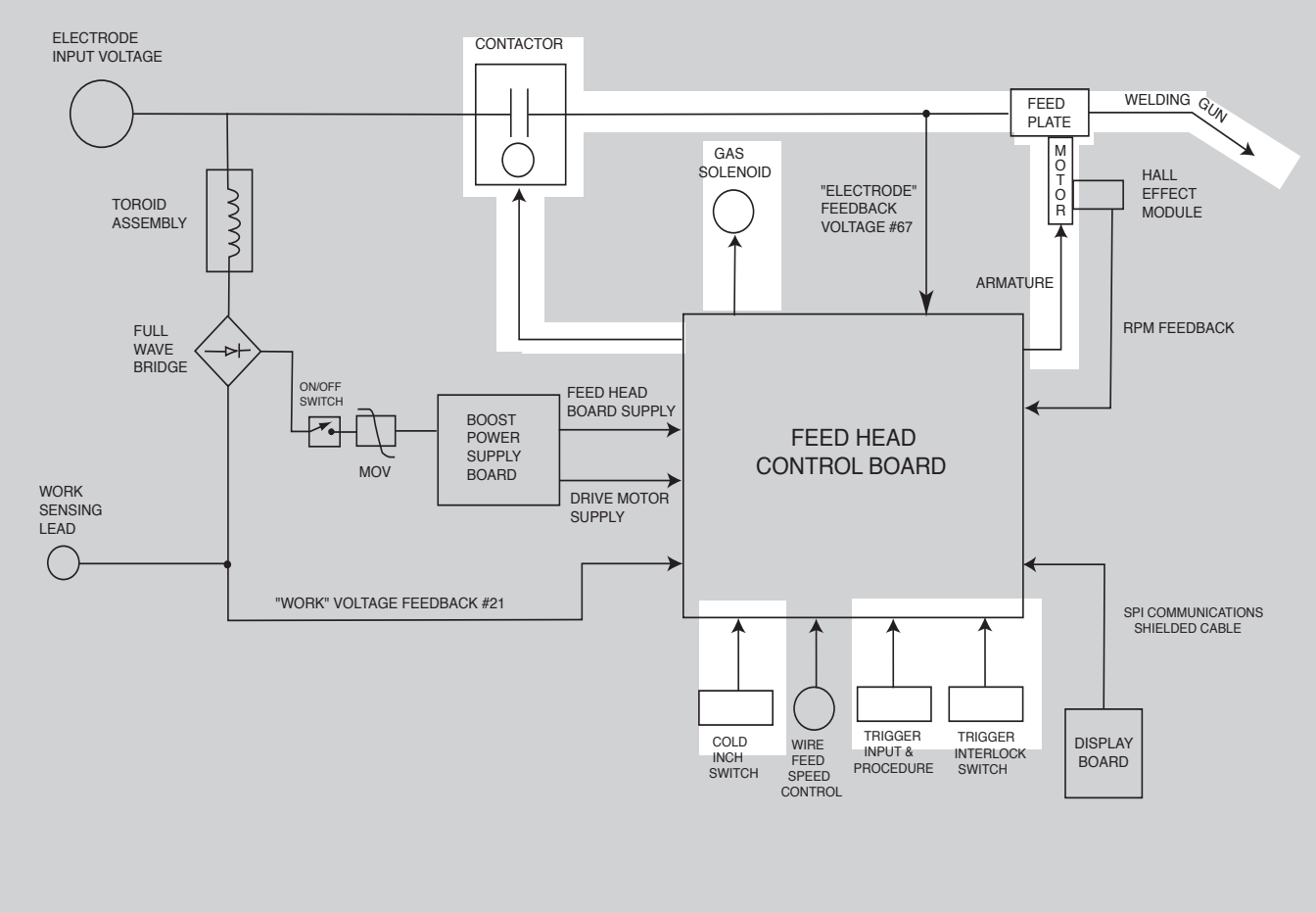

TRIGGER AND CONTROL CIRCUITS

When the gun trigger is closed (activated) the Feed Head Board is “signaled” to apply armature voltage to the drive motor, activate the gas solenoid and close the LN-15™ internal contactor. When the contactor is closed the welding current path from the electrode cable to the conductor block is completed. This sequence will supply electrode wire, arc voltage and current to the welding gun.

The Cold Inch/Gas Purge Switch allows the user to feed wire without closing the contactor. This feature gives the operator an electrically “cold” electrode even though the power source’s output terminals are electrically “hot”. This switch also allows the user to activate the gas solenoid without feeding wire or closing the contactor.

When activated the Trigger Interlock Switch keeps the gun trigger circuit closed even when the operator releases the trigger. This is useful when making long welds.

NOTE: Unshaded areas of Block Logic Diagram are the subject of discussion.

Return to Section TOC
Return to Master TOC

FIGURE E.4 – WIRE FEED SPEED CONTROL & FEEDBACK

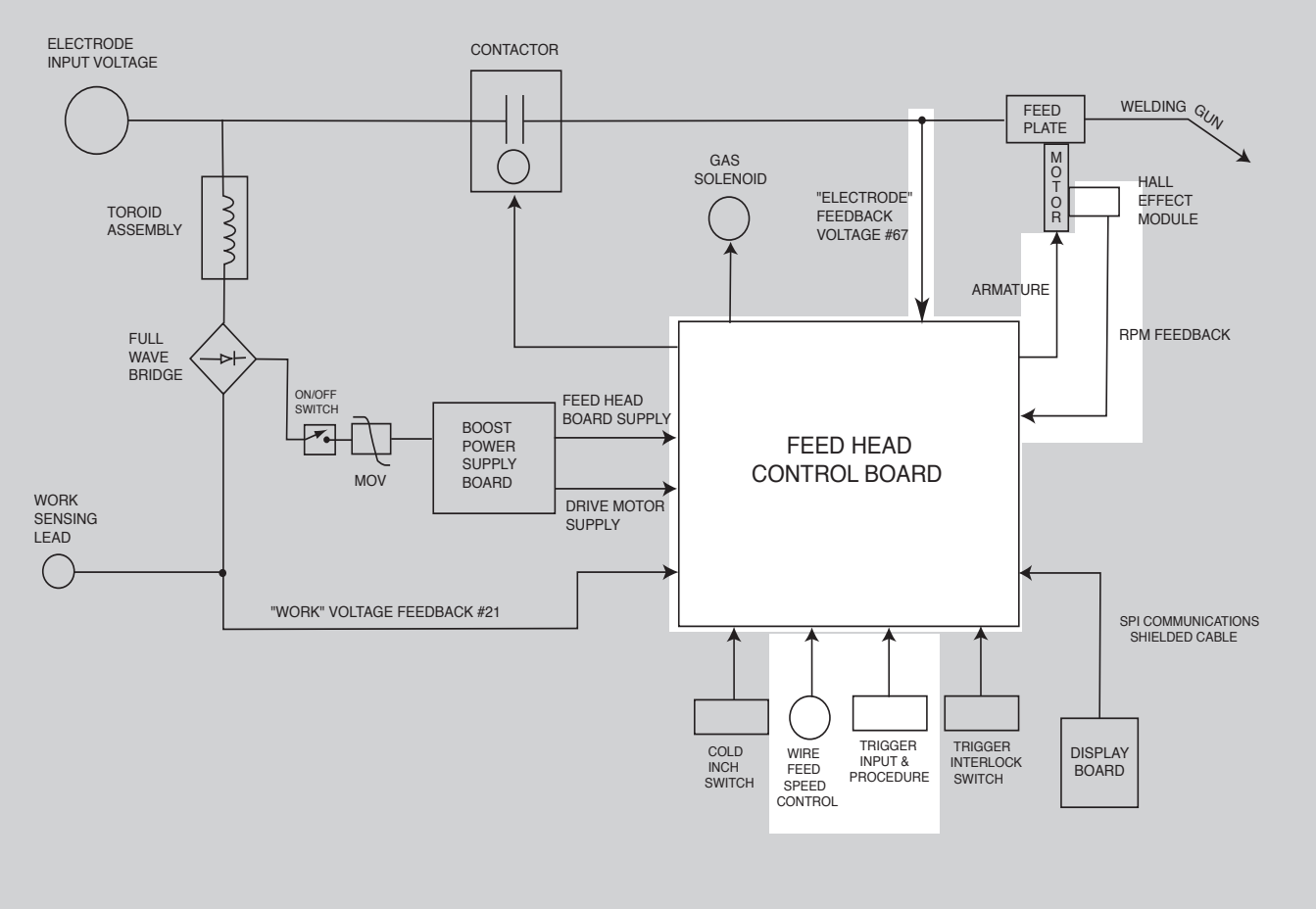

WIRE FEED SPEED CONTROL AND FEEDBACK

The combination of the Procedure Switch and the Wire Feed Speed control provide a command voltage for the Feed Head Control Board. The Hall Effect module (Tach) monitors the motor RPM and outputs a digital voltage frequency “feed back” that is delivered to the Feed Head Board.

When operating in the constant voltage (CV) mode the Feed Head Board monitors the feedback signal and compares it to the command voltage and delivers the appropriate armature voltage to the wire feed motor. In this manner a constant wire feed speed is maintained.

When the LN-15™ is connected to a constant current (CC) power source a variable wire feed speed is desirable to compensate for the varying arc voltages associated with the constant current process. To accomplish this the Feed Head Board monitors the command voltage, the feed back signal from the Hall Effect module and the arc voltage. These three factors are compared and the appropriate armature voltage is applied to the wire feed motor to compensate for the varying arc lengths and associated arc voltages.

NOTE: Unshaded areas of Block Logic Diagram are the subject of discussion.

Return to Section TOC
Return to Master TOC

FIGURE E.5 – DISPLAY BOARD

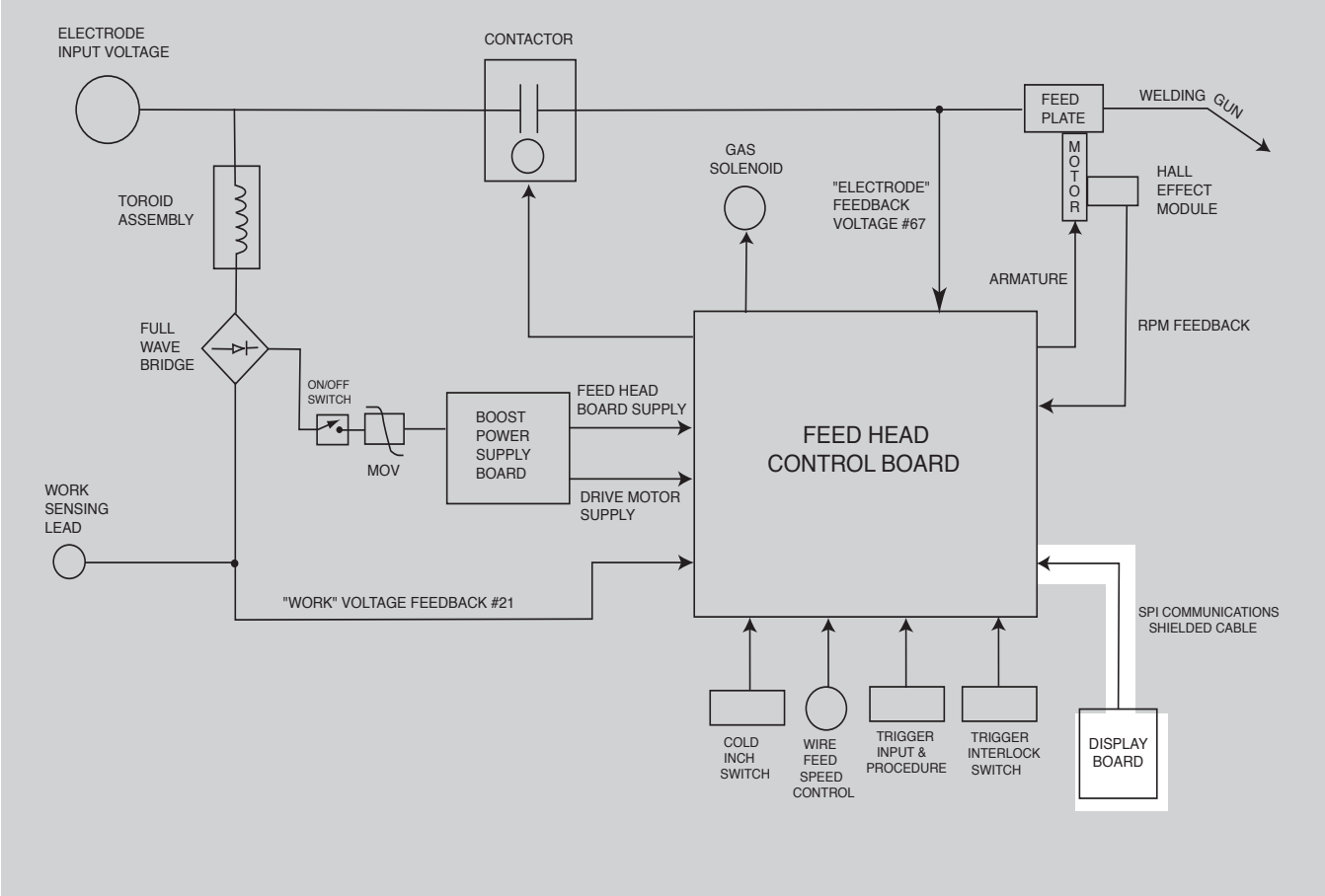

DISPLAY BOARD

The Display Board provides information to the user through digital displays and LED's. The Display Board communicates with the Feed Head Board via the SPI Bus cable.

The wire feed speed display shows the rate that the LN-15™ will feed wire during the welding process. The wire feed speed is calibrated to within +/-2%. It always displays the preset WFS.

The arc voltage display shows the average actual arc voltage during the welding process. When welding ceases the average arc voltage will continue to be shown for 5 seconds. When not welding the display show "----". The voltage is calibrated to +/-2% over a range of 10 to 45VDC. A negative "-" will be automatically displayed when the LN-15™ is configured for electrode negative processes.

All of the LEDs will briefly light when the machine is first turned on.

NOTE: Unshaded areas of Block Logic Diagram are the subject of discussion.

Return to Section TOC
Return to Master TOC

NOTES

E-6

Return to Section TOC
Return to Master TOC
Return to Section TOC
Return to Master TOC
Return to Section TOC
Return to Master TOC
Return to Section TOC
Return to Master TOC

TABLE OF CONTENTS
- TROUBLESHOOTING & REPAIR SECTION -

Return to Master TOC

Troubleshooting & Repair Section .....Section F

How to Use Troubleshooting Guide F-2

PC Board Troubleshooting Procedures and Replacement.....F-3

Troubleshooting Guide F-4

Test Procedures

Boost Power Board Test (Across the Arc Models only) F-11

Gas Solenoid Valve Test.....F-15

Contactor Test.....F-17

Drive Motor Test F-19

Hall Effect Module Test.....F-21

Replacement Procedures

Contactor Removal and Replacement.....F-23

Feedhead Control Board Removal and Replacement.....F-27

Boost Power Supply Board Removal and Replacement (A t A Models only) F-31

Wire Drive Assembly Removal and Replacement.....F-35

Cover & Spindle Mount Removal and Replacement.....F-37

Roll Cage Removal and Replacement F-41

Retest After Repair F-43

Return to Section TOC
Return to Master TOC

HOW TO USE TROUBLESHOOTING GUIDE

⚠ WARNING

Service and Repair should only be performed by Lincoln Electric Factory Trained Personnel. Unauthorized repairs performed on this equipment may result in danger to the technician and machine operator and will invalidate your factory warranty. For your safety and to avoid Electrical Shock, please observe all safety notes and precautions detailed throughout this manual.

This Troubleshooting Guide is provided to help you locate and repair possible machine malfunctions. Simply follow the three-step procedure listed below.

Step 1. LOCATE PROBLEM (SYMPTOM).
Look under the column labeled "PROBLEM (SYMPTOMS)". This column describes possible symptoms that the machine may exhibit. Find the listing that best describes the symptom that the machine is exhibiting. Symptoms are grouped into the following categories: output problems, function problems, wire feeding problems, and welding problems.

Step 2. PERFORM EXTERNAL TESTS.
The second column labeled "POSSIBLE AREAS OF MISADJUSTMENT(S)" lists the obvious external possibilities that may contribute to the machine symptom. Perform these tests/checks in the order listed. In general, these tests can be conducted without removing the case wrap-around cover.

Step 3. RECOMMENDED COURSE OF ACTION
The last column labeled "Recommended Course of Action" lists the most likely components that may have failed in your machine. It also specifies the appropriate test procedure to verify that the subject component is either good or bad. If there are a number of possible components, check the components in the order listed to eliminate one possibility at a time until you locate the cause of your problem.

All of the referenced test procedures referred to in the Troubleshooting Guide are described in detail at the end of this chapter. Refer to the Troubleshooting and Repair Table of Contents to locate each specific Test Procedure. All of the specified test points, components, terminal strips, etc. can be found on the referenced electrical wiring diagrams and schematics. Refer to the Electrical Diagrams Section Table of Contents to locate the appropriate diagram.

⚠ CAUTION

If for any reason you do not understand the test procedures or are unable to perform the tests/repairs safely, contact the Lincoln Electric Service Department for technical troubleshooting assistance before you proceed. Call 1-888-935-3877.

PC BOARD TROUBLESHOOTING PROCEDURES

⚠ WARNING

ELECTRIC SHOCK can kill.

- Have an electrician install and service this equipment. Turn the input power OFF at the fuse box before working on equipment. Do not touch electrically hot parts.

⚠ CAUTION

Sometimes machine failures appear to be due to PC board failures. These problems can sometimes be traced to poor electrical connections. To avoid problems when troubleshooting and replacing PC boards, please use the following procedure:

1. Determine to the best of your technical ability that the PC board is the most likely component causing the failure symptom.
2. Check for loose connections at the PC board to assure that the PC board is properly connected.
3. If the problem persists, replace the suspect PC board using standard practices to avoid static electrical damage and electrical shock. Read the warning inside the static resistant bag and perform the following procedures:

PC board can be damaged by static electricity.

ATTENTION Static-Sensitive Devices Handle only at Static-Safe Workstations

- Remove your body's static charge before opening the static-shielding bag. Wear an anti-static wrist strap. For safety, use a 1 Meg ohm resistive cord connected to a grounded part of the equipment frame.

- If you don't have a wrist strap, touch an un-painted, grounded, part of the equipment frame. Keep touching the frame to prevent static build-up. Be sure not to touch any electrically live parts at the same time.

- Tools which come in contact with the PC board must be either conductive, anti-static or static-dissipative.

- Remove the PC board from the static-shielding bag and place it directly into the equipment. Don't set the PC board on or near paper, plastic or cloth which could have a static charge. If the PC board can't be installed immediately, put it back in the static-shielding bag.

- If the PC board uses protective shorting jumpers, don't remove them until installation is complete.

- If you return a PC board to The Lincoln Electric Company for credit, it must be in the static-shielding bag. This will prevent further damage and allow proper failure analysis.

4. Test the machine to determine if the failure symptom has been corrected by the replacement PC board.

NOTE: It is desirable to have a spare (known good) PC board available for PC board troubleshooting.

NOTE: Allow the machine to heat up so that all electrical components can reach their operating temperature.

5. Remove the replacement PC board and substitute it with the original PC board to recreate the original problem.
   a. If the original problem does not reappear by substituting the original board, then the PC board was not the problem. Continue to look for bad connections in the control wiring harness, junction blocks, and terminal strips.
   b. If the original problem is recreated by the substitution of the original board, then the PC board was the problem. Reinstall the replacement PC board and test the machine.
6. Always indicate that this procedure was followed when warranty reports are to be submitted.

NOTE: Following this procedure and writing on the warranty report, "INSTALLED AND SWITCHED PC BOARDS TO VERIFY PROBLEM," will help avoid denial of legitimate PC board warranty claims.

Return to Section TOC
Return to Master TOC

TROUBLESHOOTING GUIDE

Observe Safety Guidelines detailed in the beginning of this manual.

PROBLEMS (SYMPTOMS)	POSSIBLE AREAS OF MISADJUSTMENT(S)	RECOMMENDED COURSE OF ACTION
FEEDING PROBLEMS		
Major physical or electrical damage is evident when the sheet metal cover(s) are removed.	1. Contact your local authorized Lincoln Electric Field Service Facility for assistance.	1. Contact the Lincoln Electric Service Department, 1-888-935-3877.
The LN-15™ does not "power-up" when the on/off switch is turned to the "ON"position.	1. Make sure the correct input voltage is being applied (15 to 110VDC). See ***Specifications Pages.*** 2. Make certain the "Work Clip" is attached securely to the work piece.	1. Check the on/off switch. See the wiring diagram. 2. Check the input rectifier bridge. See the wiring diagram. 3. Perform the ***Boost Power Supply Board Test*** if applicable. 4. The control board may be faulty. 5. If the Display Board is not lit check the input voltages to the Display Board. See the Wiring Diagram.
When the gun trigger is activated the wire drive runs and electrode wire feeds, but there is no welding output.	1. Make sure the contactor is functioning correctly. 2. Check the current carrying leads at the contactor and between the contactor and the feed plate for loose or faulty connections. See the Wiring Diagram. 3. Make sure the welding gun is connected correctly and functioning correctly. 4. Make certain the DC power source is functioning correctly.	1. ***Perform The Contactor Test.*** 2. The Control Board may be faulty.

CAUTION

If for any reason you do not understand the test procedures or are unable to perform the tests/repairs safely, contact the Lincoln Electric Service Department for technical troubleshooting assistance before you proceed. Call 1-888-935-3877.

Return to Section TOC
Return to Master TOC

TROUBLESHOOTING GUIDE

Observe Safety Guidelines detailed in the beginning of this manual.

PROBLEMS (SYMPTOMS)	POSSIBLE AREAS OF MISADJUSTMENT(S)	RECOMMENDED COURSE OF ACTION
FEEDING PROBLEMS		
When the gun trigger is activated there is no wire feed.	1. Check to see if the drive rolls are turning when the gun trigger is pulled. If the drive rolls are turning, then check for a mechanical restriction in the wire feed path. 2. If the drive rolls do not turn then check to make sure the correct DC voltage is being applied to the LN-15™. (15-110VDC). 3. Make sure the gun trigger is functioning correctly.	1. With the gun trigger circuit activated (see the Wiring Diagram) and the LN-15™ set for constant voltage operation, check the presence of 2.6 to 27.4VDC at leads 550+ to 551-. This is the voltage that is applied to the wire drive motor. This voltage is dependent upon the wire feed speed setting. 2. If the correct voltage is being applied to the drive motor and the motor does not run the motor or motor brushes may be faulty. 3. If the correct voltage is not being applied to the drive motor the Control Board may be faulty.
The wire feeds for a short period of time but then stops feeding. When the gun trigger is released then re-activated the wire resumes feeding but soon stops again.	1. The drive motor may be overloaded. Check the wire feeding path for mechanical restrictions. 2. While welding make certain the power source arc voltage is staying above 15VDC. The feeder will not function properly on less than 15VDC.	1. Check the motor armature current through either of the armature leads (550 or 551). It should not exceed 3.5 amps DC. 2. If more than 3.5 amps is indicated, then the motor is drawing too much current. Check or replace the motor brushes. 3. If less than 3.5 amps is indicated and the motor is being disabled by the Control Board, then the Control Board may be faulty. Replace. 4. The motor or gearbox may be faulty. Replace.

⚠ CAUTION

If for any reason you do not understand the test procedures or are unable to perform the tests/repairs safely, contact the Lincoln Electric Service Department for technical troubleshooting assistance before you proceed. Call 1-888-935-3877.

Return to Section TOC
Return to Master TOC

TROUBLESHOOTING GUIDE

Observe Safety Guidelines detailed in the beginning of this manual.

PROBLEMS (SYMPTOMS)	POSSIBLE AREAS OF MISADJUSTMENT(S)	RECOMMENDED COURSE OF ACTION
FEEDING PROBLEMS		
The wire stops or stubs while welding.	1. If the LN-15™ is connected to a constant current power source the arc voltage may be "dipping" below the 15VDC threshold that is essential for proper operation. 2. Try connecting the LN-15™ to a constant voltage power source. 3. Check for mechanical restrictions in the wire feeding path.	1. Monitor the motor armature voltage (leads 550 to 551). Normal voltage range is 2.6VDC to 27.4VDC dependent upon wire feed speed. If the armature voltage is correct then check or replace the motor brushes. 2. If the motor armature voltage is not correct then the Control Board may be faulty.
The wire feed speed range is only 50 to 374 IPM.(1.3 to 9.5m/min.	1. The 83%wire feed speed dual procedure is activated with the low speed gear.	1. Turn off the 83% procedure switch to return to the full wire feed speed range. 2. Check the wiring between the procedure switch and the control board. See the Wiring Diagram. 3. The control board may be faulty. Replace.
The wire feed speed range is only 50 to 600 IPM.(1.3 to 15.3 m/min)	1. The 83%wire feed speed dual procedures switch is activated with the high speed gear in place.	1. Turn off the 83% procedure switch to return to the full wire feed speed range. 2. Check the wiring between the procedure switch and the Control Board. See the wiring diagram. 3. The Control Board may be faulty. Replace.

⚠ CAUTION

If for any reason you do not understand the test procedures or are unable to perform the tests/repairs safely, contact the Lincoln Electric Service Department for technical troubleshooting assistance before you proceed. Call 1-888-935-3877.

Return to Section TOC
Return to Master TOC

Return to Section TOC
Return to Master TOC

TROUBLESHOOTING GUIDE

Observe Safety Guidelines detailed in the beginning of this manual.

PROBLEMS (SYMPTOMS)	POSSIBLE AREAS OF MISADJUSTMENT(S)	RECOMMENDED COURSE OF ACTION
FEEDING PROBLEMS		
The wire feed motor runs very fast and there is no control.	1. Make sure the LN-15™ is operating in the CV mode. 2. Make sure the wire speed control and procedure switch are operating correctly. See the wiring diagram	1. Perform the ***Drive Motor Test.*** 2. Perform the ***Hall Effect Module Test.*** 3. The Control Board may be faulty. Replace.
The wire feed speed varies during welding but the meter reading remains constant.	1. The drive rolls may be slipping causing feeding problems. 2. The LN-15™ may be in the Constant Current mode. Verify on power-up that the LN-15™ is set for Constant Voltage welding. 3. Reduce the spindle brake resistance.	1. Perform the ***Drive Motor Test.*** 2. Perform the ***Hall Effect Module Test.***

⚠ CAUTION

If for any reason you do not understand the test procedures or are unable to perform the tests/repairs safely, contact the Lincoln Electric Service Department for technical troubleshooting assistance before you proceed. Call 1-888-935-3877.

TROUBLESHOOTING GUIDE

Observe Safety Guidelines detailed in the beginning of this manual.

PROBLEMS (SYMPTOMS)	POSSIBLE AREAS OF MISADJUSTMENT(S)	RECOMMENDED COURSE OF ACTION
WELDING PROBLEMS		
No shielding gas.	1. Make sure the gas supply is adequate and the gas hoses are not loose or kinked.	1. If the gas solenoid is not operating perform the ***Gas Solenoid Test.*** 2. The Control Board may be faulty.
The shielding gas turns on sporadically, or remains on all the time.	1. The pressure in the gas line may have exceeded 80psi (5.5 bar)	1. Perform the ***Gas Solenoid Test.*** 2. The Control Board may be faulty.
The Display board shows "POS" "PRE" or "BRN".	1. The LN-15™ is in the "Press and Spin" set-up mode. 2. One of the dip switches on the control board is set to "ON" for the timer setting mode.	1. The Control board may be faulty. 2. The Display Board may be faulty.
There is porosity in the weld.	1. The part being welded may be wet or very dirty. 2. The electrode being used may be wet or rusty. 3. The shielding gas may be wrong for the process. 4. There may not be enough shielding gas. 5. Make sure the wire feed speed and arc voltage are correct for the process.	
The welding arc burns back to the tip.	1. Check the wire feeding path for mechanical restrictions, 2. Make sure the polarity is correct for the process. 3. The contact tip may be worn. 4. The welding voltage may be set too high or the wire feed speed set too low. 5. Check the wire drive tension.	1. Perform the ***Wire Drive Motor Test.*** 2. Perform the ***Hall Effect Module Test.***

CAUTION

If for any reason you do not understand the test procedures or are unable to perform the tests/repairs safely, contact the Lincoln Electric Service Department for technical troubleshooting assistance before you proceed. Call 1-888-935-3877.

Return to Section TOC Return to Master TOC

Return to Section TOC
Return to Master TOC

FAULT CODES	DESCRIPTION/ DEFINITION	RESOLUTION
0081	Average motor over current shutdown	• The wire drive motor has overheated. • Check to make sure the electrode slides easily through the liner of the gun. • Reduce the spindle brake resistance. • Reduce the amount of tension in the wire drive tension arm. • For the best results, use only Lincoln electrodes. • Wait 10 minutes for the wire feeder to cool.
0082	Locked rotor condition on the wire drive motor.	• Verify that nothing is jammed in the wire drive or gears.
0086	Trigger lockout.	• The ripple of the power source OCV is too high, greater than 110V. (Across the Arc Models only) • Verify that the power source is reconnected for the proper input voltage. • Repair or replace the power source. The power source does not conform to NEMA.

NOTE: If more than one fault message is being displayed, perform all the checks for the faults before replacing the printed circuit board

NOTES

F-10

Return to Section TOC
Return to Master TOC
Return to Section TOC
Return to Master TOC
Return to Section TOC
Return to Master TOC
Return to Section TOC
Return to Master TOC

Return to Section TOC
Return to Master TOC

BOOST POWER BOARD TEST

Across the Arc Models only

WARNING

Service and repair should be performed by only Lincoln Electric factory trained personnel. Unauthorized repairs performed on this equipment may result in danger to the technician or machine operator and will invalidate your factory warranty. For your safety and to avoid electrical shock, please observe all safety notes and precautions detailed throughout this manual.

If for any reason you do not understand the test procedures or are unable to perform the test / repairs safely, contact the Lincoln Electric Service Department for electrical troubleshooting assistance before you proceed. Call 1-888-935-3877.

TEST DESCRIPTION

This procedure will determine if the correct input voltage is being applied to the Boost Power Board and if the correct output voltage is being produced by the Boost Power Board.

MATERIALS NEEDED

Volt/Ohm Meter

DC Voltage Source (15 to 110 VDC)

Return to Section TOC
Return to Master TOC

BOOST POWER BOARD TEST *(continued)*

TEST PROCEDURE

1. Remove input power to the LN-15™.

2. Perform the ***Cover and Spindle Mount removal procedure.***

3. Locate the Boost Power Board. See Figure F.1.

4. Apply the correct DC voltage to the LN-15™ (15-110 VDC).

5. Check for the correct input voltage to the Boost Power Board at leads 526A (+) to 527A(-) (15-110 VDC). ***See Figure F.3.*** If the input voltage is not present check the input rectifier bridge and associiated circuits. See the wiring diagram.

6. Check for approximately 80 VDC at leads 501(+) to 502(-) . ***See Figure F.3.***

7. Check for approximately 80 VDC at leads labeled POS to NEG. ***See Figure F.3.***

8. If the correct input voltage is present in step 5 and either of the voltages in steps 6 or 7 are not present the Boost Power Board is faulty. Replace.

FIGURE F.1 – BOOST POWER BOARD LOCATION

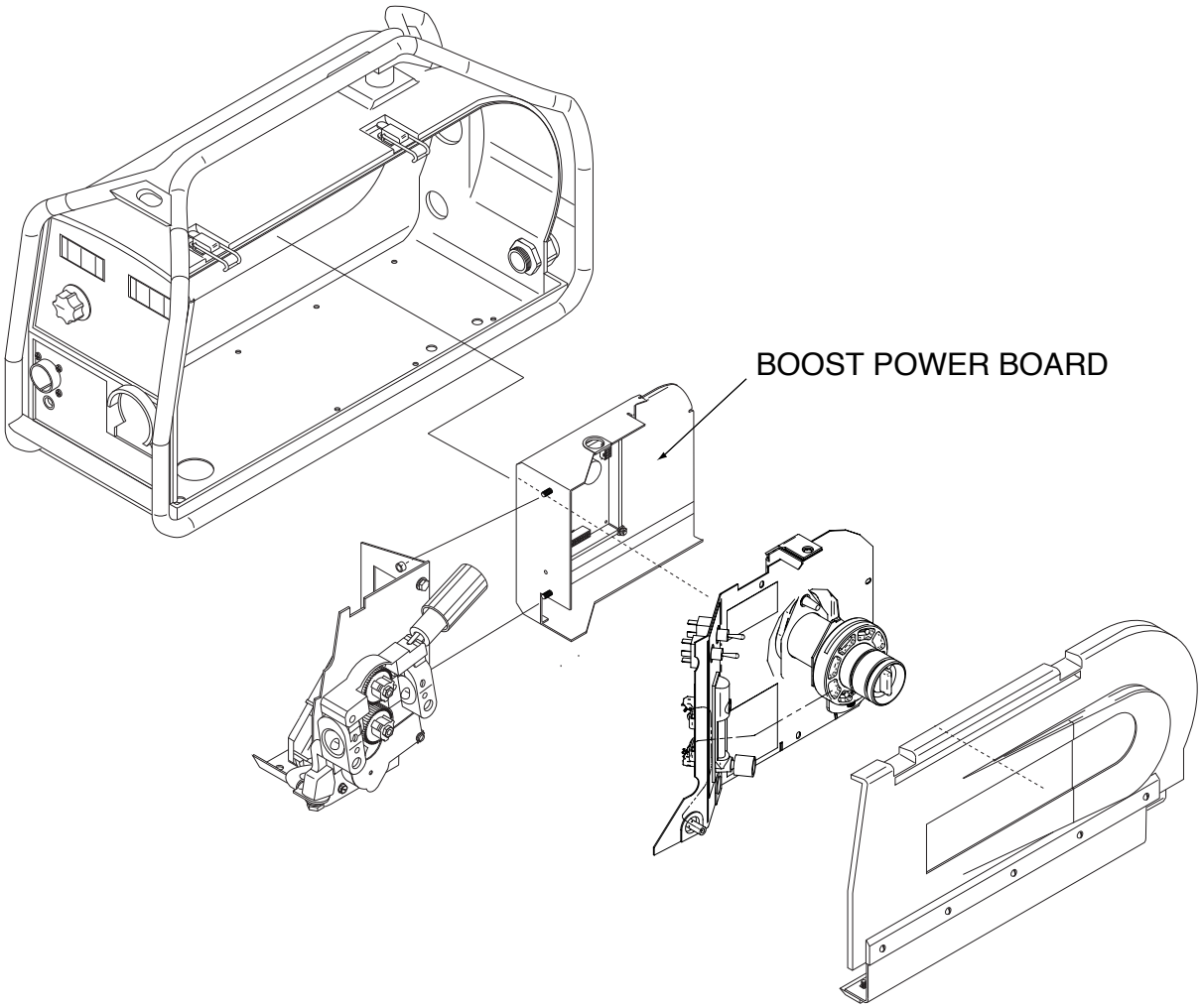

BOOST POWER BOARD TEST *(continued)*

FIGURE F.2 – BOOST POWER BOARD

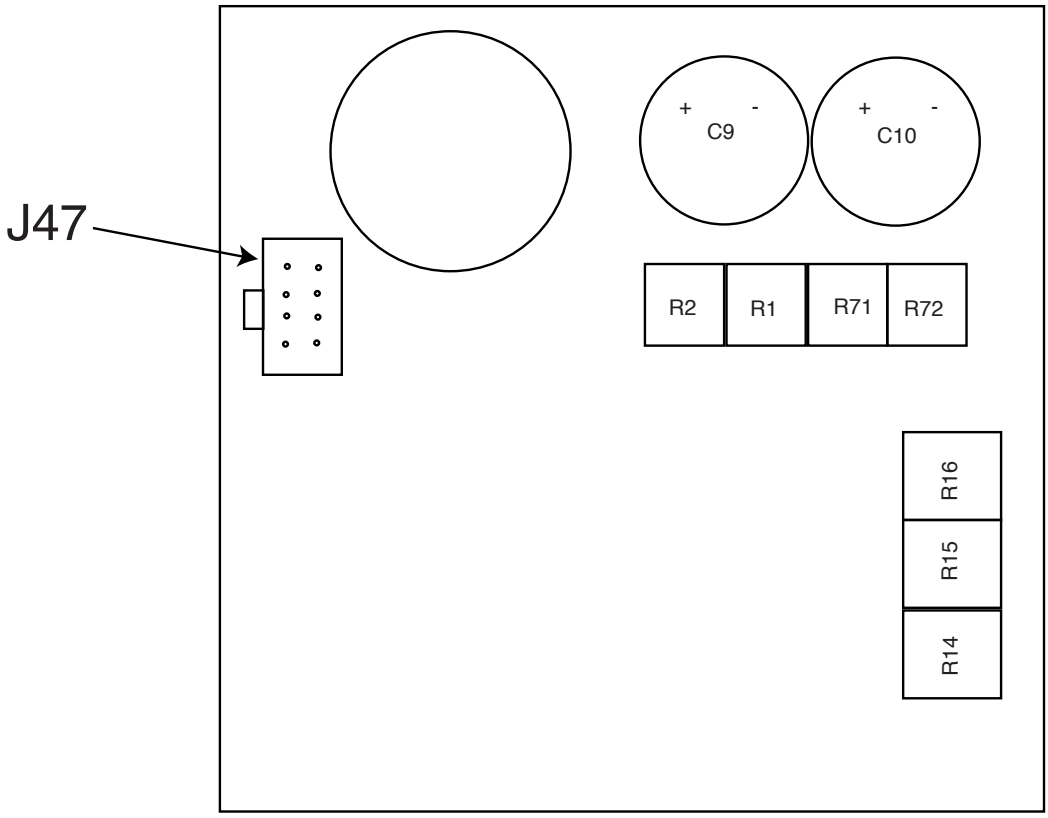

FIGURE F.3 – PLUG J47 LEAD LOCATIONS

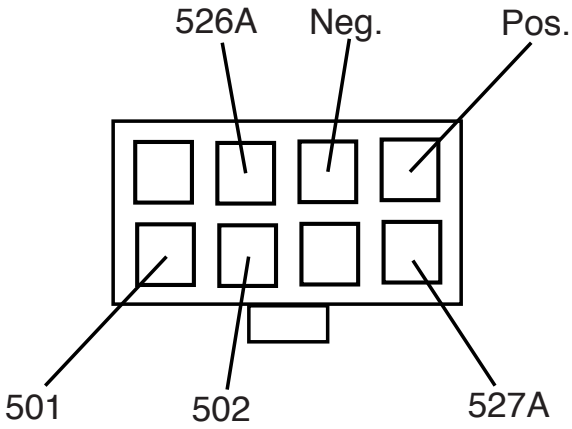

Return to Section TOC
Return to Master TOC

NOTES

F-14

Return to Section TOC
Return to Master TOC
Return to Section TOC
Return to Master TOC
Return to Section TOC
Return to Master TOC
Return to Section TOC
Return to Master TOC

Return to Section TOC
Return to Master TOC

GAS SOLENOID VALVE TEST

WARNING

Service and repair should be performed by only Lincoln Electric factory trained personnel. Unauthorized repairs performed on this equipment may result in danger to the technician or machine operator and will invalidate your factory warranty. For your safety and to avoid electrical shock, please observe all safety notes and precautions detailed throughout this manual.

If for any reason you do not understand the test procedures or are unable to perform the test / repairs safely, contact the Lincoln Electric Service Department for electrical troubleshooting assistance before you proceed. Call 1-888-935-3877.

TEST DESCRIPTION

This test will determine if the gas solenoid valve is functional.

MATERIALS NEEDED

12 VDC Supply
Volt/Ohmmeter
DC Voltage Source (15 to 110 VDC)

GAS SOLENOID VALVE TEST
(continued)

FIGURE F.4 – LEADS 552 & 553

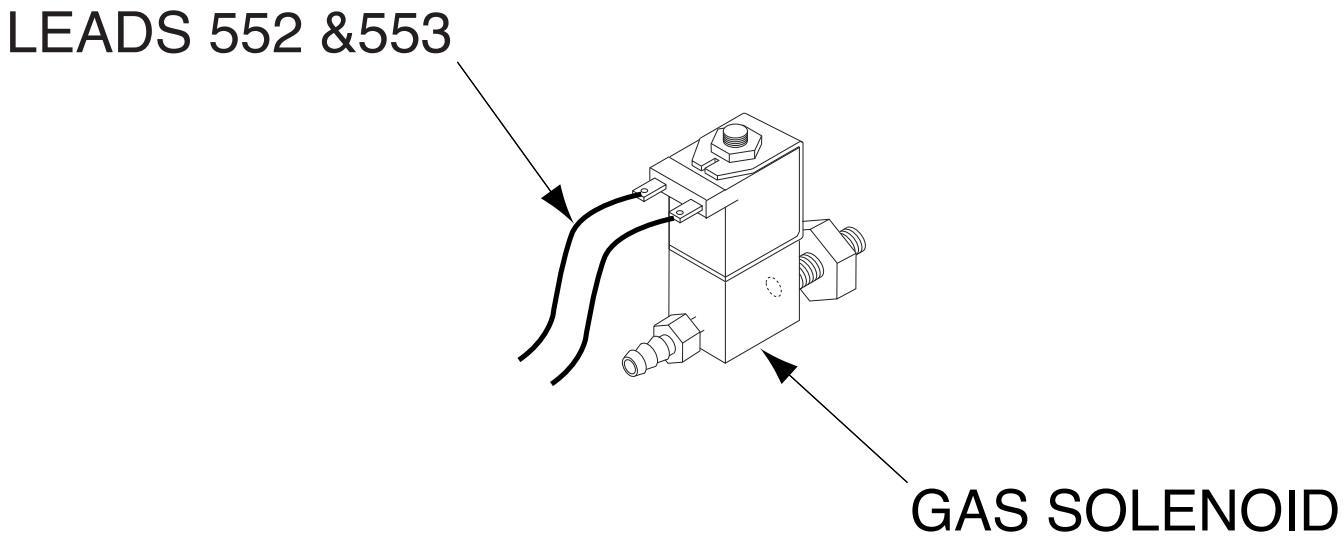

TEST PROCEDURE

1. Remove power to the LN-15™ machine.
2. Perform the ***Cover and Spindle Mount removal procedure***.
3. Locate and remove the two solenoid leads 552 & 553 from the solenoid valve. See Figure F.4.
4. Make sure the gas supply for the solenoid is hooked up, and then apply 12 VDC to the gas solenoid.
5. If the solenoid activates and allows gas flow, then the solenoid valve is good.

NOTE: There should not be any gas flow until the solenoid is activated.

6. If the solenoid does not activate and allow gas to flow, then the solenoid is faulty. Replace.
7. The normal solenoid resistance is approximately 20 to 21 ohms.
8. Normal voltage (with gun trigger activated) measured at the solenoid is 6.5 VDC (leads 552 & 553).
9. If the voltage is not present at leads 552 & 553 the feed head control board may be faulty.

Return to Section TOC
Return to Master TOC

Return to Section TOC
Return to Master TOC

CONTACTOR TEST

WARNING

Service and repair should be performed by only Lincoln Electric factory trained personnel. Unauthorized repairs performed on this equipment may result in danger to the technician or machine operator and will invalidate your factory warranty. For your safety and to avoid electrical shock, please observe all safety notes and precautions detailed throughout this manual.

If for any reason you do not understand the test procedures or are unable to perform the test / repairs safely, contact the Lincoln Electric Service Department for electrical troubleshooting assistance before you proceed. Call 1-888-935-3877.

TEST DESCRIPTION

This test will determine if the contactor is functional.

MATERIALS NEEDED

12 VDC Supply
Volt/Ohmmeter

CONTACTOR TEST
(continued)

FIGURE F.5 – CONTACTOR

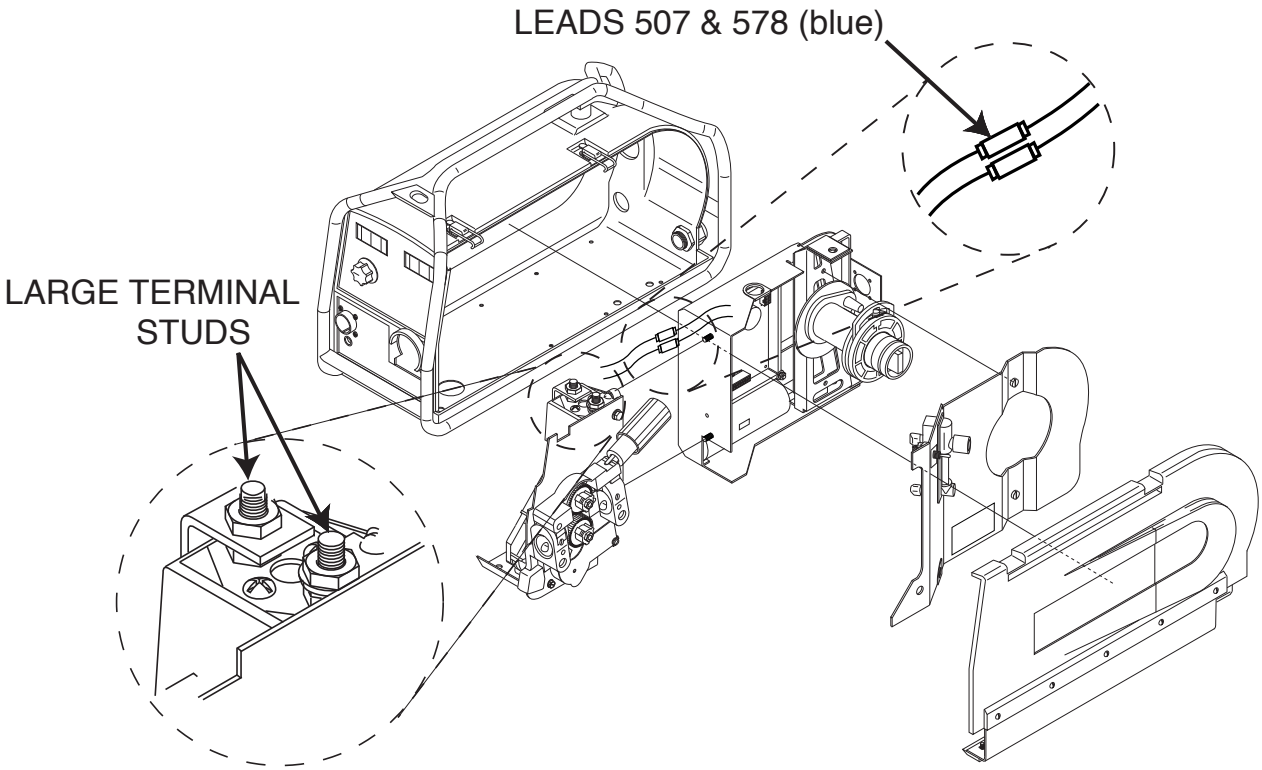

TEST PROCEDURE

1. Remove input power to the LN-15™.
2. Perform the ***Wire Drive Assembly removal procedure.***
3. Locate the contactor and leads 507 and 578 (blue) and separate the two in line connectors. See Figure F.5.
4. Apply 12 VDC to the contactor coil leads.

⚠ CAUTION

Do not leave the 12 VDC applied to the contactor coil for a prolonged period of time (15 seconds maximum). Damage to contactor may result.

5. If the contactor does not activate when the 12 VDC is applied, the contactor is faulty. Replace.

Note: The normal contactor coil resistance is approximately 4.4 ohms.

6. If the contactor activates when the 12 VDC is applied, check the resistance between the two large terminal studs with the contactor activated. The resistance should be very low (0 to 1 ohm).
7. If the resistance is “high” or “open” between the two large terminal studs when the contactor is activated, the contactor is faulty. Replace.
8. If the contactor activates and the resistance between the terminals is low when the 12 VDC is applied, the contactor is good.

NOTE: When the contactor is not activated, the resistance between the terminals should be very high (infinite). If the resistance is always low, the contacts are “stuck” and the contactor is faulty. Replace.

Return to Section TOC
Return to Master TOC

Return to Section TOC
Return to Master TOC

DRIVE MOTOR TEST

WARNING

Service and repair should be performed by only Lincoln Electric factory trained personnel. Unauthorized repairs performed on this equipment may result in danger to the technician or machine operator and will invalidate your factory warranty. For your safety and to avoid electrical shock, please observe all safety notes and precautions detailed throughout this manual.

If for any reason you do not understand the test procedures or are unable to perform the test / repairs safely, contact the Lincoln Electric Service Department for electrical troubleshooting assistance before you proceed. Call 1-888-935-3877.

TEST DESCRIPTION

This test will determine if the Wire Drive Motor is functioning properly.

MATERIALS NEEDED

Voltage Source (variable 3 to 26 VDC)

Volt/Ohmmeter

DRIVE MOTOR TEST *(Continued)*

Figure F.6- Motor Leads

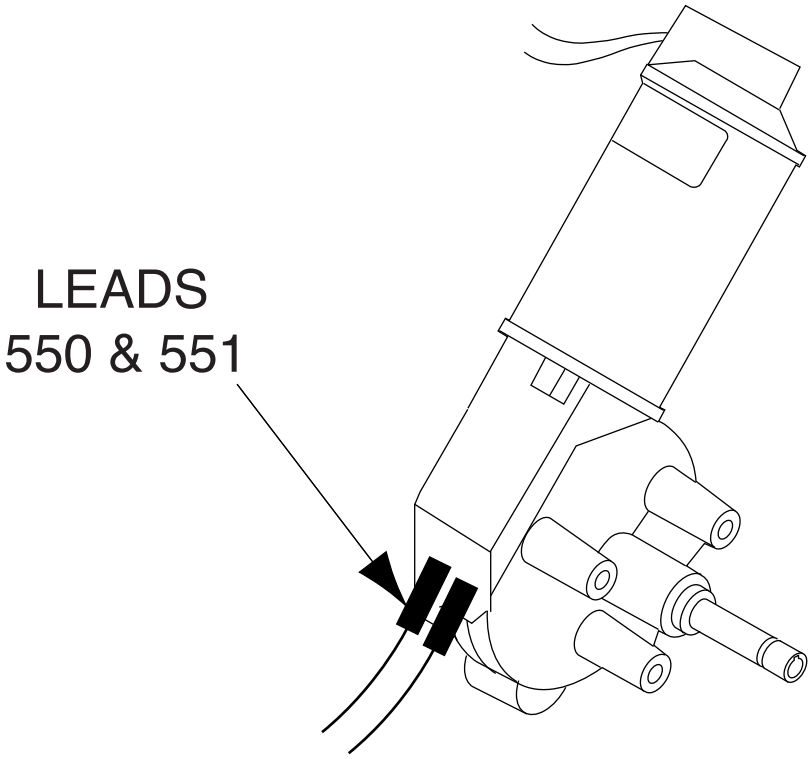

TEST PROCEDURE

1. Remove the input power to the LN-15™.
2. Perform the ***Wire Drive Assembly Removal procedure.***
3. Locate the Positive lead 550 (white) and disconnect from motor. Note pin location for reassembly. See Figure F.6.
4. Locate the Negative lead 551 (gray) and disconnect from motor. **Note pin location for reassembly.** See Figure F.6.
5. Apply a variable DC voltage to the drive motor from lead 550(white)(+) to lead 551(gray)(-).
6. When the supply voltage is varied from 3 to 26 VDC, the drive motor speed (RPM) should vary accordingly. If the motor does not run or vary in speed, the motor, gearbox or motor brushes may be faulty. Check or replace.
7. Check the resistance between each of the motor leads and the motor case. The resistance should be very high (at least 500,000 ohms). If the resistance is low, the motor is grounded to the motor case and should be replaced.

Return to Section TOC
Return to Master TOC

Return to Section TOC
Return to Master TOC

HALL EFFECT MODULE TEST

WARNING

Service and repair should be performed by only Lincoln Electric factory trained personnel. Unauthorized repairs performed on this equipment may result in danger to the technician or machine operator and will invalidate your factory warranty. For your safety and to avoid electrical shock, please observe all safety notes and precautions detailed throughout this manual.

If for any reason you do not understand the test procedures or are unable to perform the test / repairs safely, contact the Lincoln Electric Service Department for electrical troubleshooting assistance before you proceed. Call 1-888-935-3877.

TEST DESCRIPTION

This test will determine if the Hall Effect Module is functioning properly.

MATERIALS NEEDED

Voltage Source (variable 15 to 110 VDC)

Volt/Ohmmeter

HALL EFFECT MODULE TEST *(Continued)*

Figure F.7 - PLUG J2 LEAD LOCATION

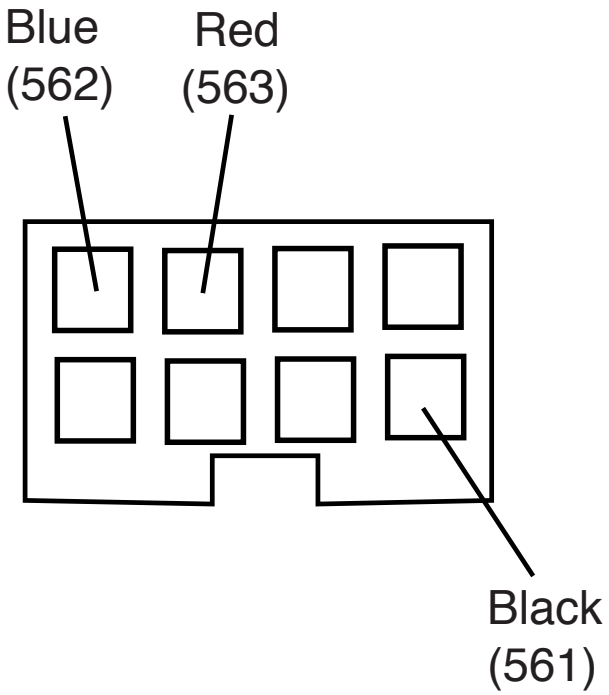

TEST PROCEDURE

1. Remove the input power to the LN-15™.
2. Perform the ***Wire Drive Assembly Removal procedure.***
3. Locate the three Hall Effect leads at Plug J2. See Figure F7.
4. Apply at least 15VDC but no more than 115VDC to the LN-15™ from the electrode cable to the work sensing lead.
5. Check for the presence of 5VDC from lead 563 (Red+) to lead 561 (Black-). If the 5VDC is not present or low, the feed head control board may be faulty.
6. Activate the LN-15™ trigger circuit, make sure the drive motor is running and check for the presence of approximately 2.8VDC from lead 562 (Red+) to lead 561 (Black-). The value of 2.8VDC represents the correct feedback voltage from the Hall Effect device to the control board. This value can also be measured using a frequency counter

   50 in./min. = 120 HZ

   700 in./min. = 1.6 KHZ
7. If the above voltage reading is not correct, the Hall Effect device may be faulty.

Return to Section TOC
Return to Master TOC

CONTACTOR REMOVAL AND REPLACEMENT PROCEDURE

WARNING

Service and repair should be performed by only Lincoln Electric factory trained personnel. Unauthorized repairs performed on this equipment may result in danger to the technician or machine operator and will invalidate your factory warranty. For your safety and to avoid electrical shock, please observe all safety notes and precautions detailed throughout this manual.

If for any reason you do not understand the test procedures or are unable to perform the test / repairs safely, contact the Lincoln Electric Service Department for electrical troubleshooting assistance before you proceed. Call 1-888-935-3877.

TEST DESCRIPTION

This procedure will aid the technician in the removal and replacement of the contactor.

MATERIALS NEEDED

7/16” Wrench
3/4” Wrench
11/16” Wrench
Screwdriver

Return to Section TOC
Return to Master TOC

CONTACTOR REMOVAL AND REPLACEMENT PROCEDURE *(Continued)*

Figure F.8 - CONTACTOR LEAD LOCATION

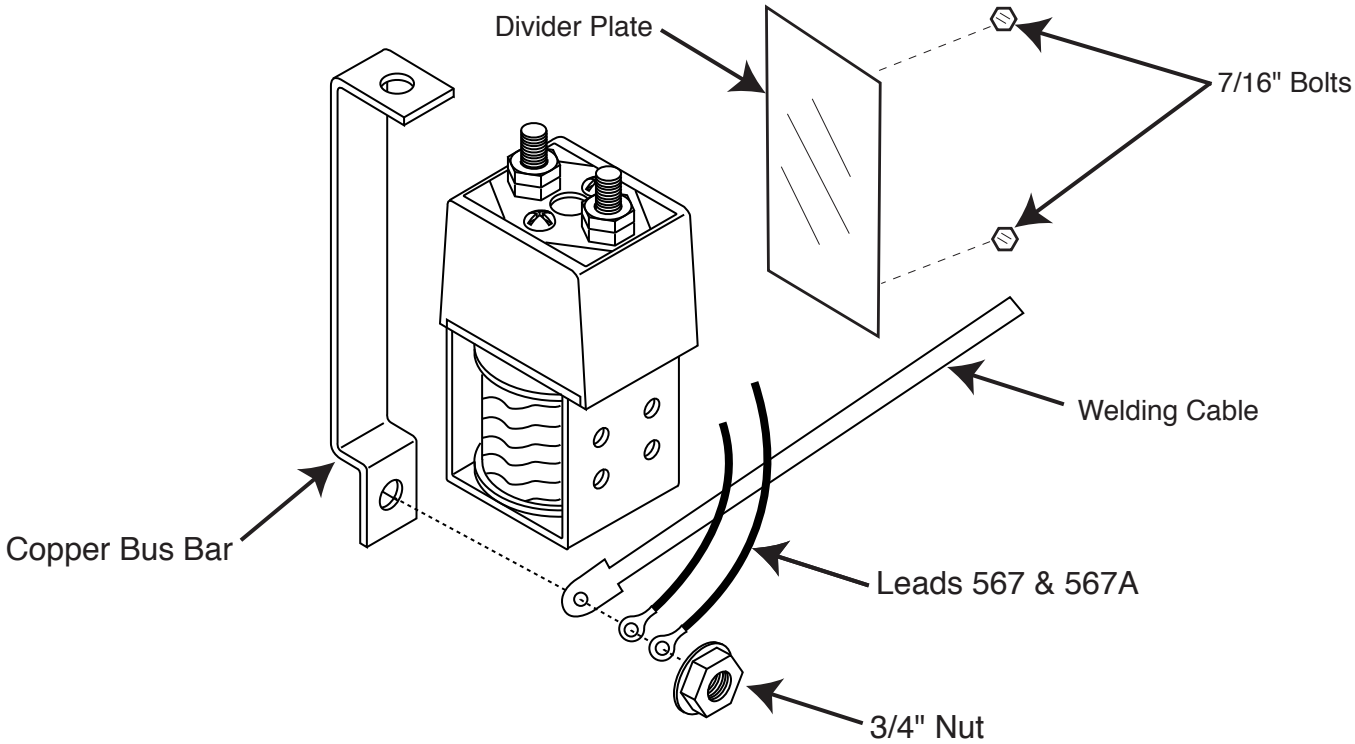

REMOVAL PROCEDURE

1. Remove the input power to the LN-15™.
2. Perform the ***Roll Cage Removal Procedure.***
3. Perform the ***Wire Drive Assembly Removal procedure.***
4. Remove the two rubber roll cage mounts that hold the contactor assembly to the case bottom.
5. Using the 3/4” wrench remove the welding cable from the contactor assembly stud. See Figure F.8. Also leads 567 & 567A.
6. Disconnect the two coil leads at their in line connectors.
7. Disconnect and clear ground leads as necessary.
8. Using the 7/16” wrench remove the two bolts mounting the contactor assembly to the divider plate. See Figure F.8.
9. Carefully remove the contactor assembly from the LN-15™.
10. Using the 11/16” wrench remove the cable and copper bus bar from the contactor.
11. The contactor may now be removed by using the screwdriver to remove the four screws mounting the contactor to the mounting plate.

Return to Section TOC
Return to Master TOC

CONTACTOR REMOVAL AND REPLACEMENT PROCEDURE *(Continued)*

REPLACEMENT PROCEDURE

1. Install the new contactor using the four screws previously removed.
2. Replace the copper bus bar and cable.
3. Install the the contactor assembly into the case.
4. Using the 7/16” wrench mount the contactor assembly to the divider plate.
5. Install the two rubber mounts previously removed.
6. Connect the two coil leads.
7. Connect all group leads previously removed.
8. Using the 3/4” wrench replace the welding cable and lead 567 and 567A.
9. Replace the wire drive assembly.
10. Replace the roll cage.

Return to Section TOC
Return to Master TOC
Return to Section TOC
Return to Master TOC
Return to Section TOC
Return to Master TOC
Return to Section TOC
Return to Master TOC

NOTES

F-26

Return to Section TOC
Return to Master TOC
Return to Section TOC
Return to Master TOC
Return to Section TOC
Return to Master TOC
Return to Section TOC
Return to Master TOC

Return to Section TOC
Return to Master TOC

FEED HEAD CONTROL BOARD REMOVAL AND REPLACEMENT PROCEDURE

WARNING

Service and repair should be performed by only Lincoln Electric factory trained personnel. Unauthorized repairs performed on this equipment may result in danger to the technician or machine operator and will invalidate your factory warranty. For your safety and to avoid electrical shock, please observe all safety notes and precautions detailed throughout this manual.

If for any reason you do not understand the test procedures or are unable to perform the test / repairs safely, contact the Lincoln Electric Service Department for electrical troubleshooting assistance before you proceed. Call 1-888-935-3877.

TEST DESCRIPTION

This procedure will aid the technician in the removal and replacement of the Feed head Control Board.

MATERIALS NEEDED

3/8” Wrench

Return to Section TOC
Return to Master TOC

FEED HEAD CONTROL BOARD REMOVAL AND REPLACEMENT PROCEDURE *(Continued)*

Figure F.9 - FEED HEAD CONTROL BOARD LOCATION

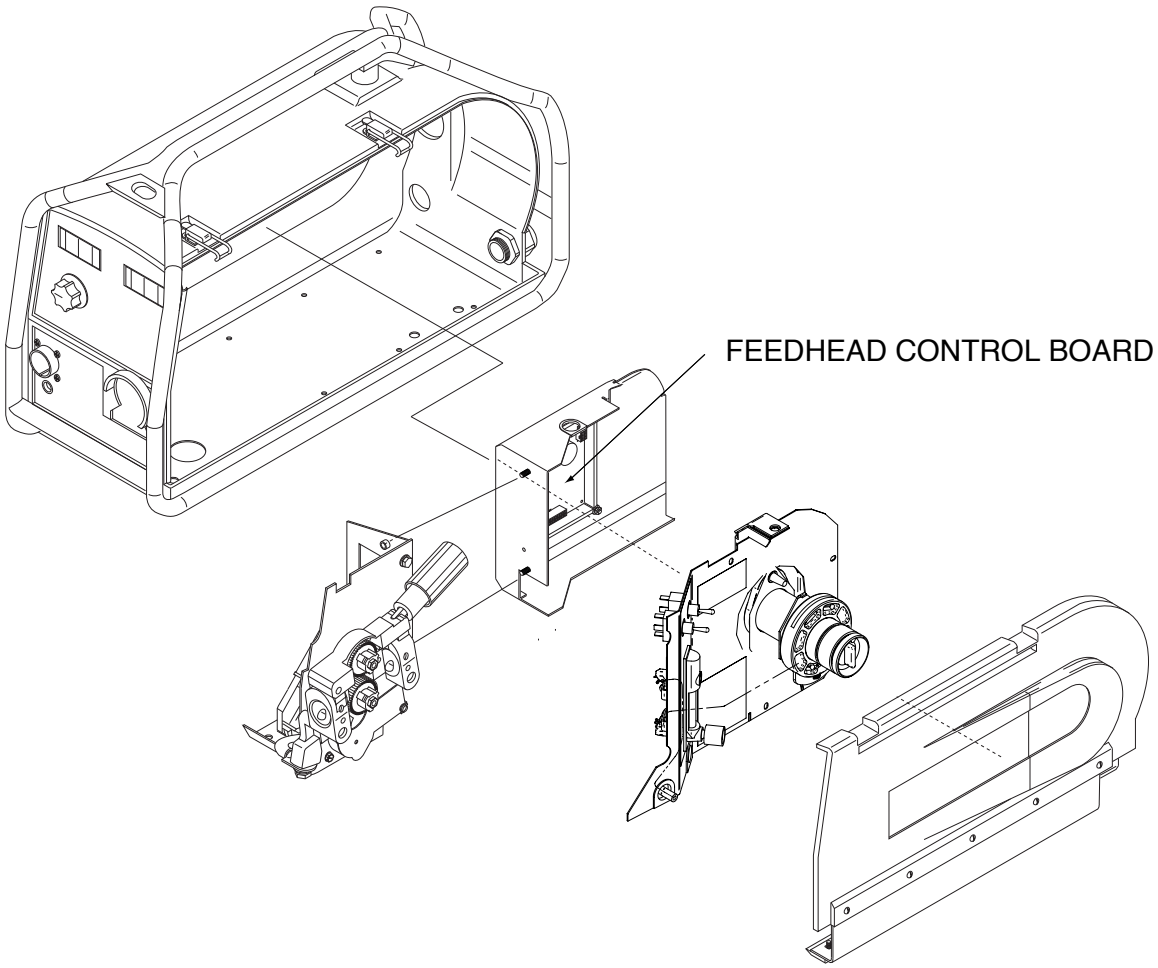

REMOVAL PROCEDURE

1. Remove input power to the LN-15™.
2. Perform the ***Cover and Spindle Mount Removal Procedure.***
3. Locate the Feed head Control Board. and plugs J81, J82, J83, J84, J85, J86 and J88. See Figure F.9 & ***See Figure F.10.***
4. Remove the seven plugs from the board taking note of placement for reassembly.
5. Using the 3/8” wrench remove the four nuts holding the board in place.
6. Carefully remove the Feed head Control Board.

REPLACEMENT PROCEDURE

1. Set the new Feed head Control Board on the four mounting studs.
2. Secure with the four nuts previously removed.
3. Replace the seven plugs previously removed. ***See Figure F.10.***
4. Replace the Cover and Spindle mount.

FEED HEAD CONTROL BOARD REMOVAL AND REPLACEMENT PROCEDURE *(Continued)*

Figure F.10 - FEED HEAD CONTROL BOARD

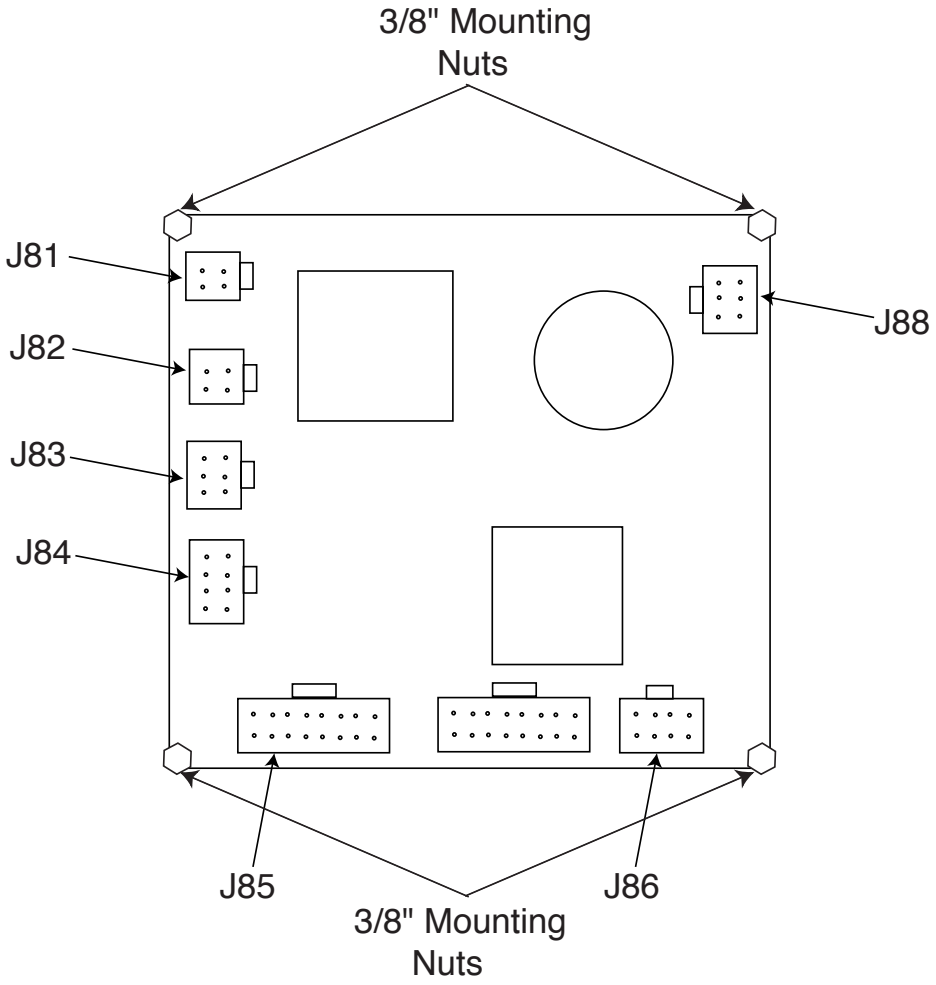

Return to Section TOC
Return to Master TOC

NOTES

F-30

Return to Section TOC
Return to Master TOC
Return to Section TOC
Return to Master TOC
Return to Section TOC
Return to Master TOC
Return to Section TOC
Return to Master TOC

Return to Section TOC
Return to Master TOC

BOOST POWER SUPPLY BOARD REMOVAL AND REPLACEMENT PROCEDURE (ACROSS THE ARC MODELS ONLY)

WARNING

Service and repair should be performed by only Lincoln Electric factory trained personnel. Unauthorized repairs performed on this equipment may result in danger to the technician or machine operator and will invalidate your factory warranty. For your safety and to avoid electrical shock, please observe all safety notes and precautions detailed throughout this manual.

If for any reason you do not understand the test procedures or are unable to perform the test / repairs safely, contact the Lincoln Electric Service Department for electrical troubleshooting assistance before you proceed. Call 1-888-935-3877.

TEST DESCRIPTION

This procedure will aid the technician in the removal and replacement of the Boost Power Supply Board.

MATERIALS NEEDED

3/8” Wrench

Return to Section TOC
Return to Master TOC

BOOST POWER SUPPLY BOARD REMOVAL AND REPLACEMENT PROCEDURE *(Continued)*

Figure F.11 - BOOST POWER BOARD LOCATION

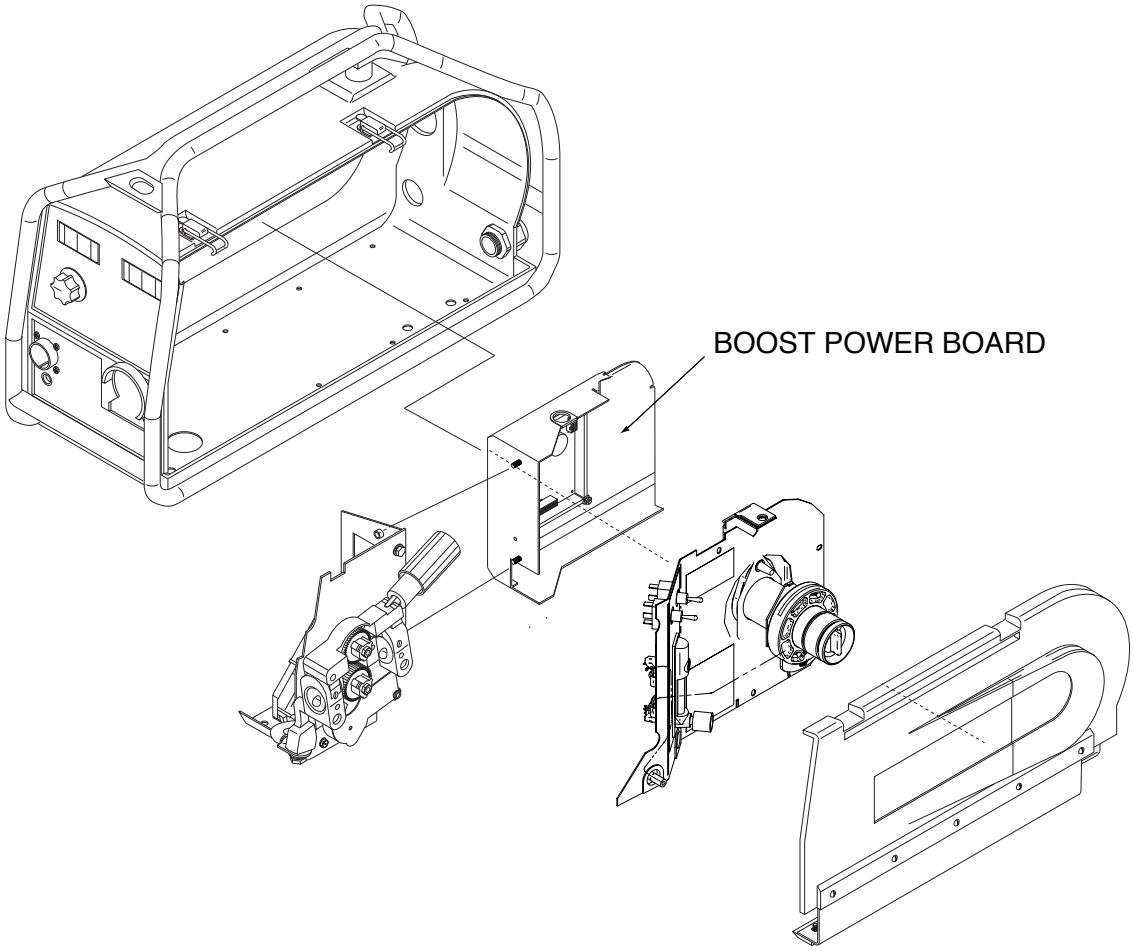

REMOVAL PROCEDURE

1. Remove input power to the LN-15™.
2. Perform the ***Cover and Spindle Mount Removal Procedure.***
3. Locate the Boost Power Supply Board. See Figure F.11.
4. Disconnect plug J47. ***See Figure F.12.***
5. Using the 3/8" wrench remove the three nuts holding the board in place.
6. Carefully remove the Boost Power Supply Board.

REPLACEMENT PROCEDURE

1. Set the new Board on the mounting studs.
2. Secure with the three nuts previously removed.
3. Replace plug J47 previously removed. ***See Figure F.12.***
4. Replace the Cover and Spindle mount.

BOOST POWER SUPPLY BOARD REMOVAL AND REPLACEMENT PROCEDURE *(Continued)*

Figure F.12 - BOOST POWER BOARD PLUG/MOUNT LOCATION

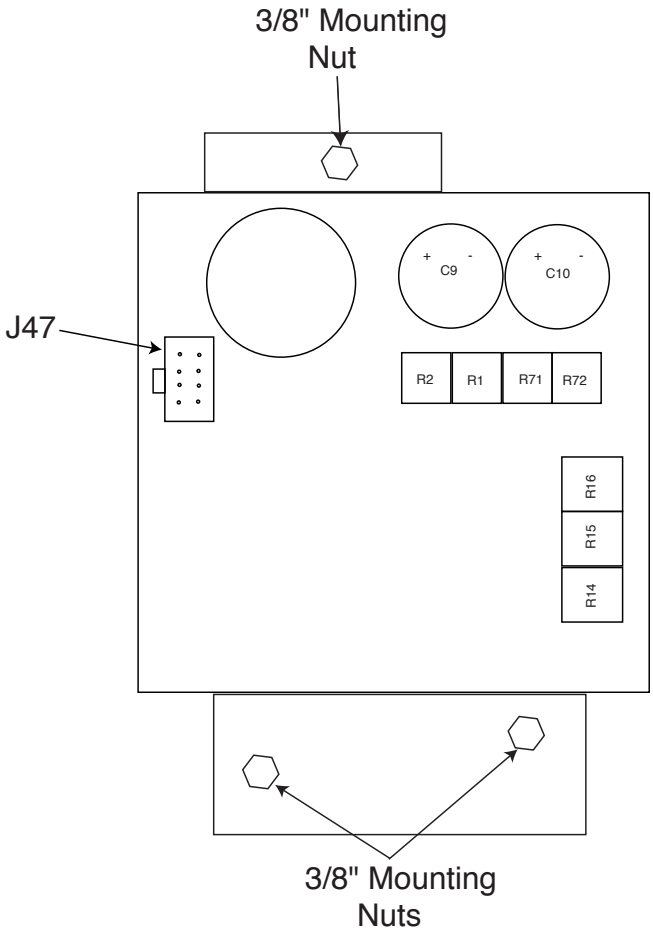

Return to Section TOC
Return to Master TOC

NOTES

F-34

Return to Section TOC
Return to Master TOC
Return to Section TOC
Return to Master TOC
Return to Section TOC
Return to Master TOC
Return to Section TOC
Return to Master TOC

Return to Section TOC
Return to Master TOC

WIRE DRIVE ASSEMBLY REMOVAL AND REPLACEMENT PROCEDURE

WARNING

Service and repair should be performed by only Lincoln Electric factory trained personnel. Unauthorized repairs performed on this equipment may result in danger to the technician or machine operator and will invalidate your factory warranty. For your safety and to avoid electrical shock, please observe all safety notes and precautions detailed throughout this manual.

If for any reason you do not understand the test procedures or are unable to perform the test / repairs safely, contact the Lincoln Electric Service Department for electrical troubleshooting assistance before you proceed. Call 1-888-935-3877.

TEST DESCRIPTION

This procedure will aid the technician in the removal and replacement of the Wire Drive Assembly.

MATERIALS NEEDED

3/8” Wrench
3/4” Wrench
Screwdriver
Small Pliers

WIRE DRIVE ASSEMBLY
REMOVAL AND REPLACEMENT PROCEDURE *(Continued)*

Figure F.13 - WIRE DRIVE MOUNTING SCREW LOCATION

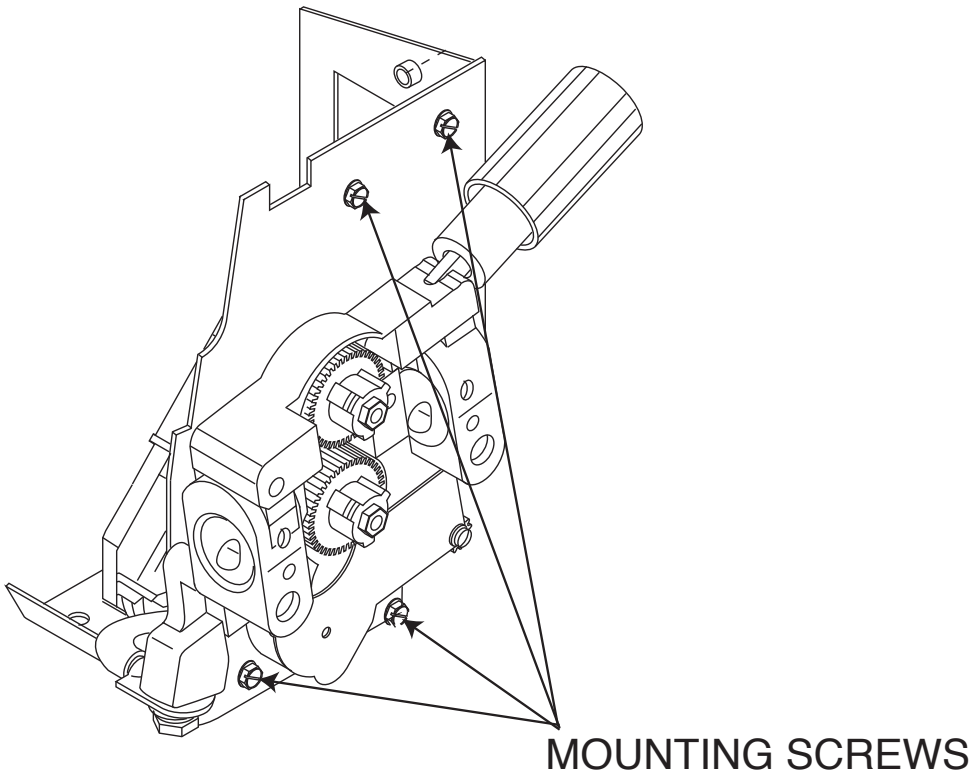

REMOVAL PROCEDURE

1. Remove input power to the LN-15™.
2. Open door.
3. Remove the four screws mounting the wire drive assembly to the case. See Figure F.13.
4. Using small pliers disconnect the gas hose from the conductor block.
5. Carefully maneuver the drive assembly out of the case.
6. Using the 3/4” wrench remove the cable from the conductor block.
7. Remove lead 67 from the conductor block. See Wiring Diagram.
8. Remove plug J2.

REPLACEMENT PROCEDURE

1. Connect previously removed plug J2 to the new conductor block.
2. Replace lead 67 into the conductor block.
3. Replace the cable onto the conductor block.
4. Replace the gas hose onto the conductor block.
5. Carefully maneuver the Wire Drive Assembly into the case.
6. Secure assembly to machine using the four previously removed screws.

Return to Section TOC
Return to Master TOC

Return to Section TOC
Return to Master TOC

COVER AND SPINDLE MOUNT REMOVAL AND REPLACEMENT PROCEDURE

WARNING

Service and repair should be performed by only Lincoln Electric factory trained personnel. Unauthorized repairs performed on this equipment may result in danger to the technician or machine operator and will invalidate your factory warranty. For your safety and to avoid electrical shock, please observe all safety notes and precautions detailed throughout this manual.

If for any reason you do not understand the test procedures or are unable to perform the test / repairs safely, contact the Lincoln Electric Service Department for electrical troubleshooting assistance before you proceed. Call 1-888-935-3877.

TEST DESCRIPTION

This procedure will aid the technician in the removal and replacement of the Cover and Spindle Mount Assembly.

MATERIALS NEEDED

3/8” Wrench
1/2” Wrench
Large Pliers

Return to Section TOC
Return to Master TOC

COVER AND SPINDLE MOUNT REMOVAL AND REPLACEMENT PROCEDURE *(Continued)*

Figure F.14 - COVER AND SPINDLE MOUNT LOCATION

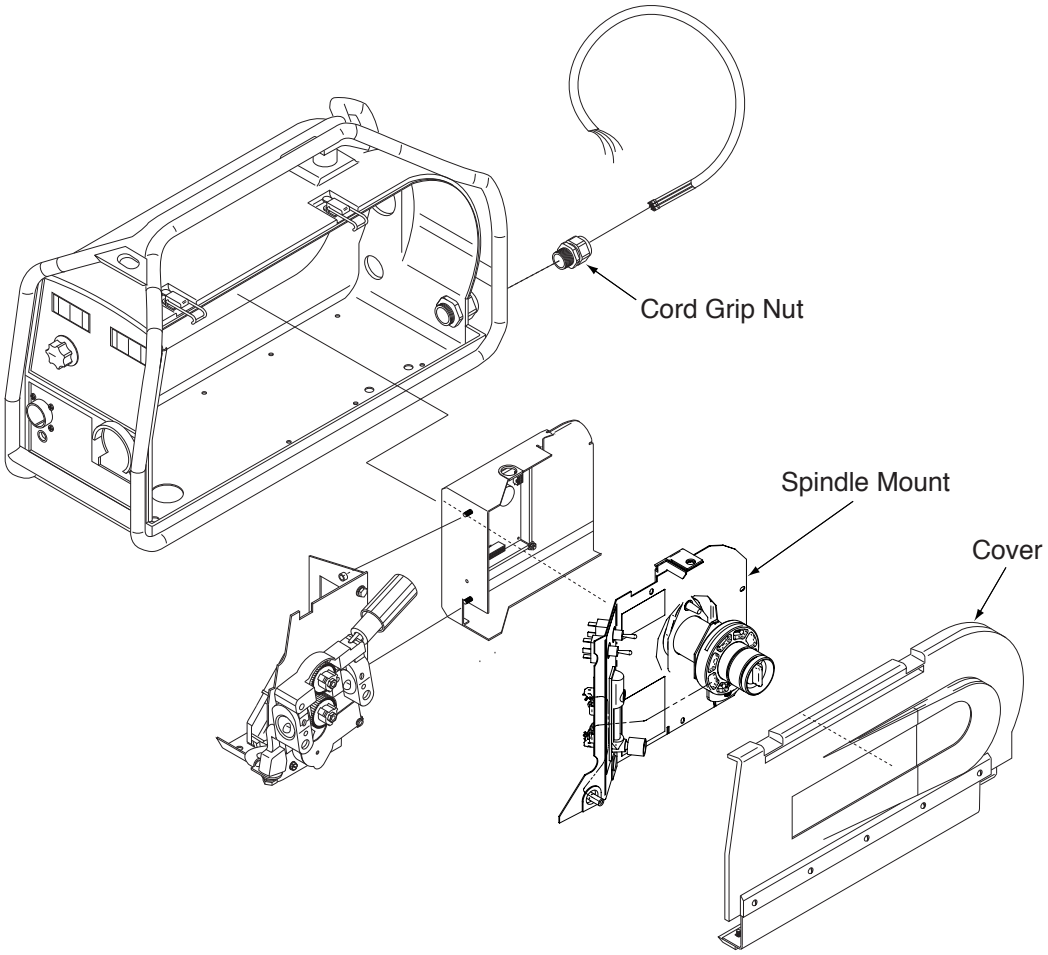

REMOVAL PROCEDURE

1. Remove input power to the LN-15™.
2. Open door.
3. Locate the spindle mount and cover assembly. See Figure F.14.
4. Using the 1/2” wrench remove the one bolt from the top of the cover.
5. Using the 3/8” wrench remove the five mounting screws. ***See Figure F.15.***
6. Using the large pliers loosen and remove the cord grip nut. See Figure F.14.
7. Pull the electrode cable inward through the rear case.
8. Disconnect the gas hose from the conductor block on the Wire Drive Assembly.
9. Carefully remove the cover and spindle assembly from the case. Be careful not to damage the switches, leads or solenoid.
10. If complete removal is necessary disconnect the leads from the switches and solenoid. Be sure to label for reassembly.

COVER AND SPINDLE MOUNT REMOVAL AND REPLACEMENT PROCEDURE *(Continued)*

Figure F.15 - COVER AND SPINDLE MOUNT SCREW LOCATION

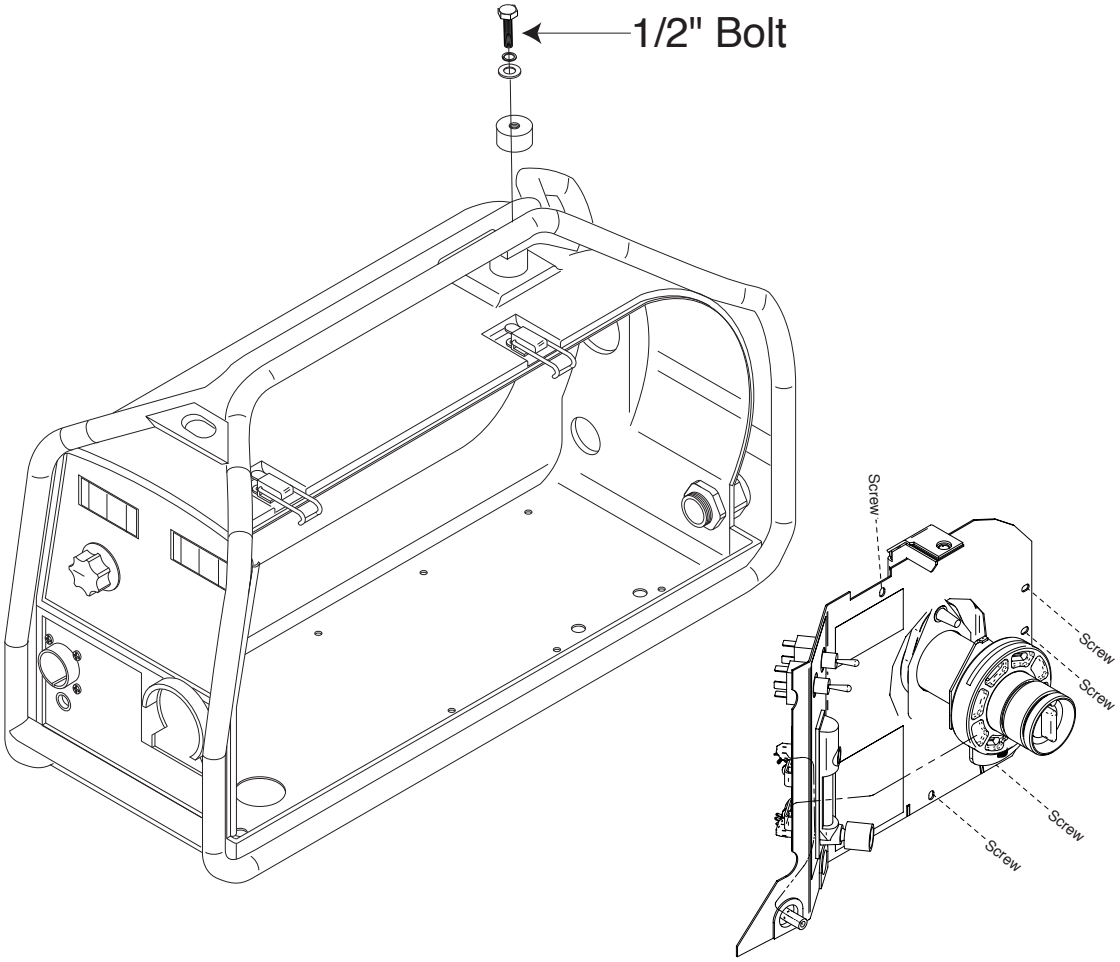

REPLACEMENT PROCEDURE

1. Replace all leads to switches and solenoid.
2. Maneuver assembly into case.
3. Connect gas hose to conductor block.
4. Replace five mounting screws.
5. Replace bolt into top of case.
6. Replace the electrode cable into the cord grip. Replace and tighten the nut.

Return to Section TOC
Return to Master TOC

NOTES

F-40

Return to Section TOC
Return to Master TOC
Return to Section TOC
Return to Master TOC
Return to Section TOC
Return to Master TOC
Return to Section TOC
Return to Master TOC

Return to Section TOC
Return to Master TOC

ROLL CAGE
REMOVAL AND REPLACEMENT PROCEDURE

WARNING

Service and repair should be performed by only Lincoln Electric factory trained personnel. Unauthorized repairs performed on this equipment may result in danger to the technician or machine operator and will invalidate your factory warranty. For your safety and to avoid electrical shock, please observe all safety notes and precautions detailed throughout this manual.

If for any reason you do not understand the test procedures or are unable to perform the test / repairs safely, contact the Lincoln Electric Service Department for electrical troubleshooting assistance before you proceed. Call 1-888-935-3877.

TEST DESCRIPTION

This procedure will aid the technician in the removal and replacement of the Roll Cage.

MATERIALS NEEDED

7/16” Wrench

Return to Section TOC
Return to Master TOC

ROLL CAGE
REMOVAL AND REPLACEMENT PROCEDURE *(Continued)*

Figure F.16 - ROLL CAGE BOLT LOCATION

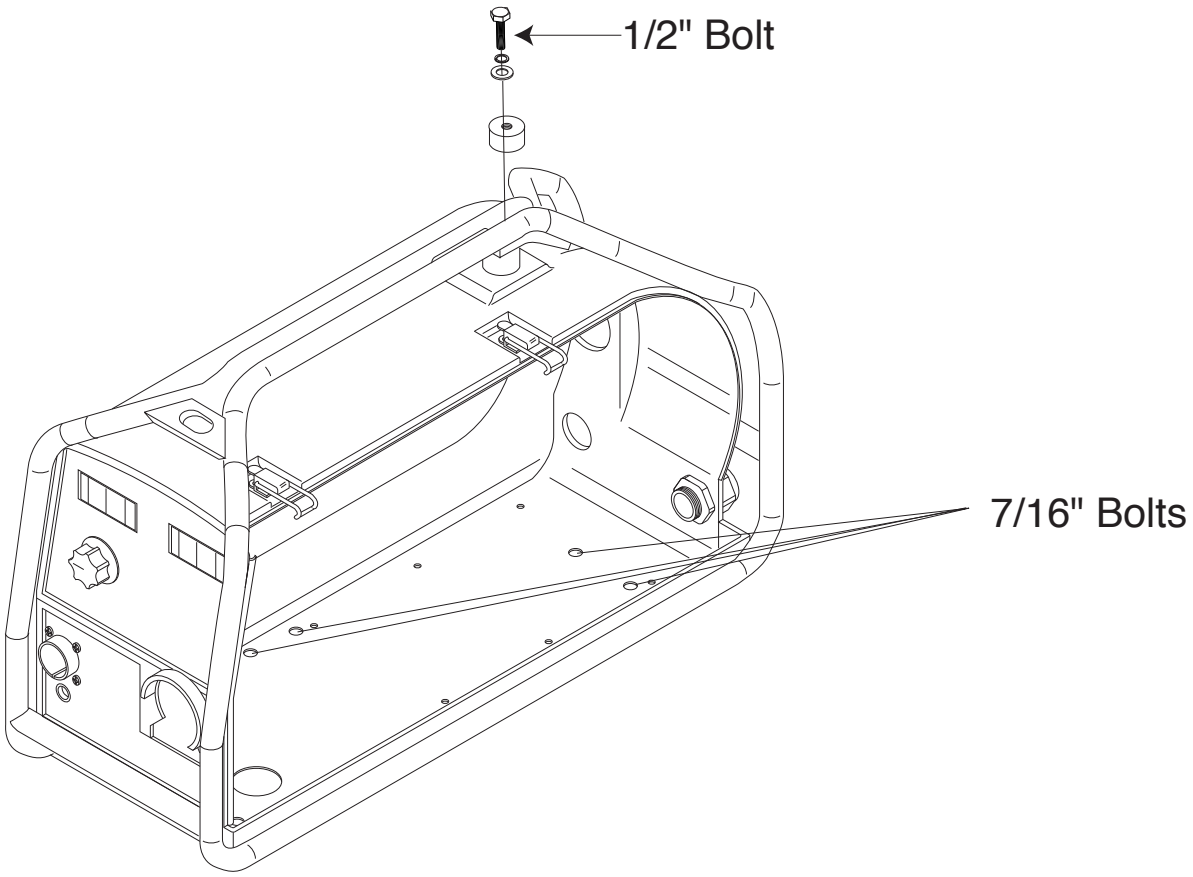

REMOVAL PROCEDURE

1. Remove input power to the LN-15™.
2. Using a 7/16” Wrench remove the five bolts securing the roll cage to the LN-15™ case.
3. Carefully remove the roll cage.

Return to Section TOC
Return to Master TOC

RETEST AFTER REPAIR

If a failed test indicates that any mechanical part that could affect the machine's electrical characteristics must be replaced or if any electrical components are repaired of replaced, the machine must be retested and meet the following standards.

Wire Feed Speed..... 50 thru 700 inches per minute
Gas Solenoid..... Must operate when gun trigger is activated
Contactor..... Must operate when gun trigger is activated

NOTES

F-44

Return to Section TOC
Return to Master TOC
Return to Section TOC
Return to Master TOC
Return to Section TOC
Return to Master TOC
Return to Section TOC
Return to Master TOC

TABLE OF CONTENTS
- ELECTRICAL DIAGRAMS SECTION -

Electrical Diagrams .....Section G

Wiring Diagram (Code 11033, 11035) (L11436-1).....G-2
Wiring Diagram (Code 11600) (L11436-2).....G-3
Wiring Diagram (Code 11034, 11036) (L11657-1).....G-4
Wiring Diagram (Code 11601) (L11657-2).....G-5
Schematic - Entire Machine (Code 11033, 11035) (G4198-1) G-6
Schematic - Entire Machine (Code 11600) (G4198-2) G-7
Schematic - Entire Machine (Code 11034, 11036) (G4197-1) G-8
Schematic - Entire Machine (Code 11601) (G4197-2) G-9
Schematic - Boost PC Board (Across the Arc Models only) (L11818) G-10
Schematic - Display PC Board - All Codes (L11756).....G-11
Schematic - Feedhead PC Board - All Codes (G3883 PG1) G-12
Schematic - Feedhead PC Board - All Codes (G3883 PG2) G-13

*** NOTE:** Many PC Board Assemblies are now totally encapsulated, surface mounted and or multi-layered and are therefore considered to be unserviceable. Assembly drawings of these boards are no longer provided.

Return to Master TOC
Return to Master TOC
Return to Master TOC
Return to Master TOC

WIRING DIAGRAM - (CODE 11033, 11035) (L11436-1)

LN-15 ACROSS THE ARC MODEL

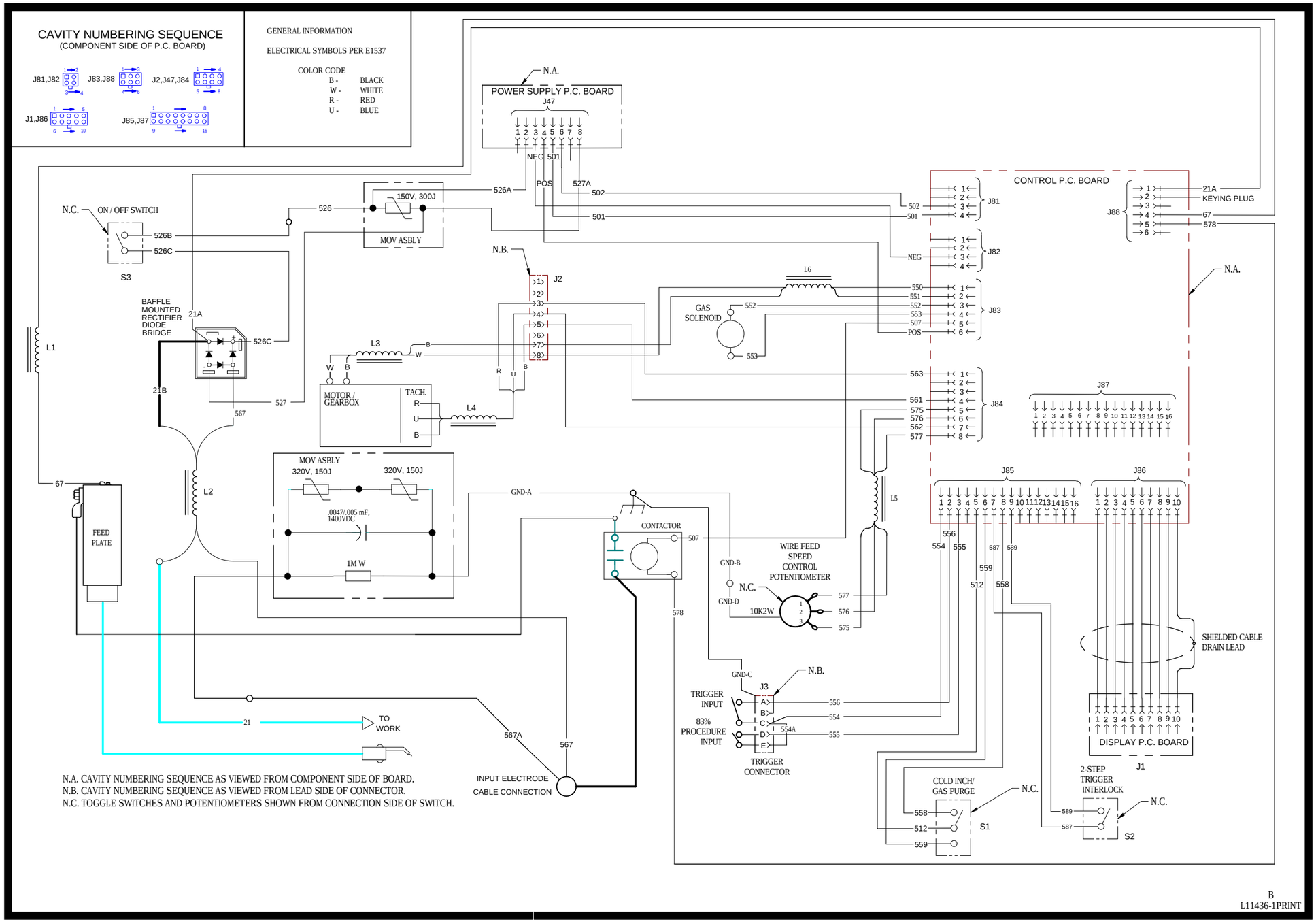

NOTE: This diagram is for reference only. It may not be accurate for all machines covered by this manual. The wiring diagram specific to your code is pasted inside one of the enclosure panels of your machine.

Return to Section TOC Return to Master TOC

WIRING DIAGRAM - (CODE 11600) (L11436-2)

LN-15 ACROSS THE ARC MODEL

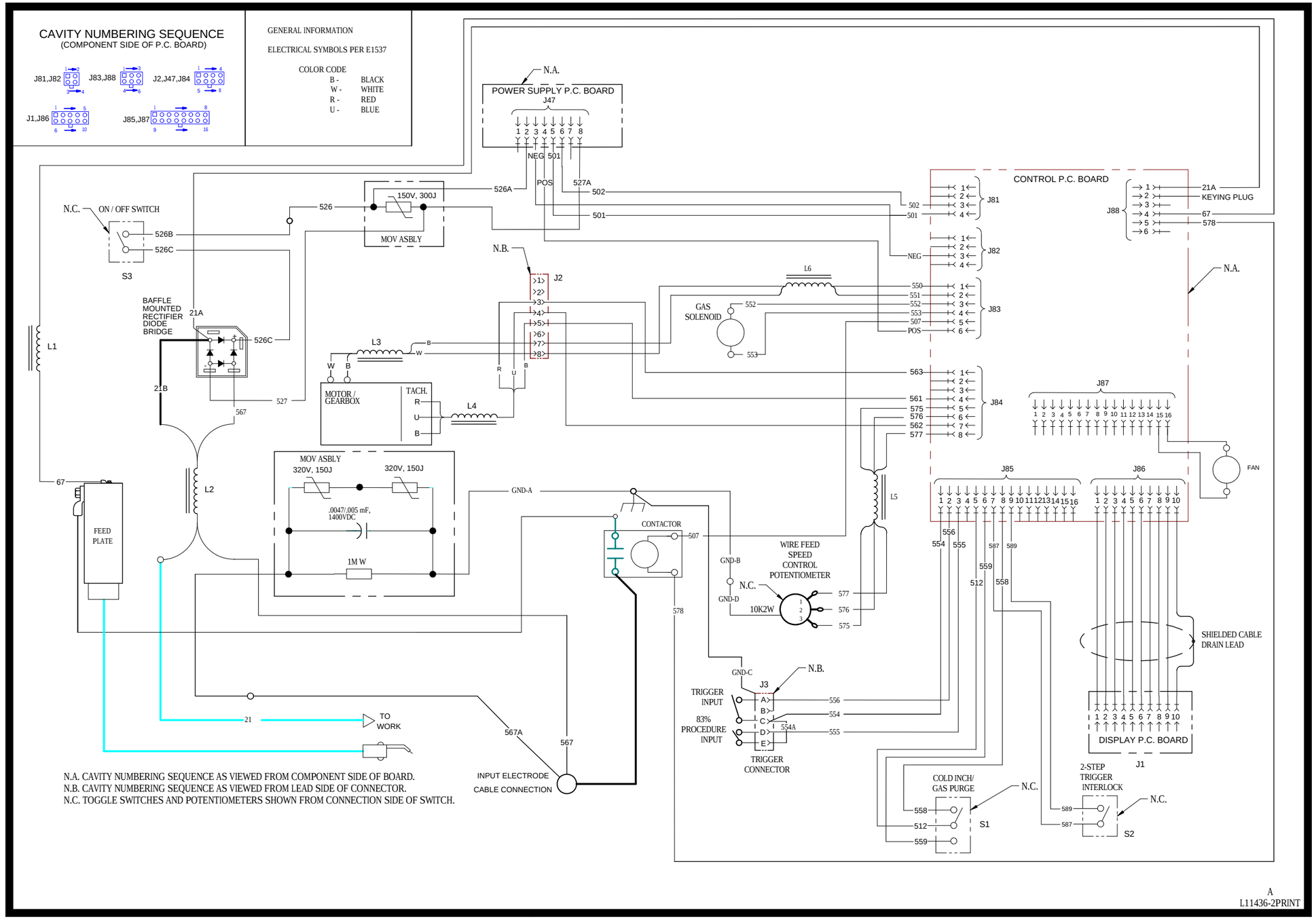

NOTE: This diagram is for reference only. It may not be accurate for all machines covered by this manual. The wiring diagram specific to your code is pasted inside one of the enclosure panels of your machine.

Return to Section TOC
Return to Master TOC

WIRING DIAGRAM - (CODE 11034, 11036) (L11657-1)

LN-15 CONTROL CABLE MODEL

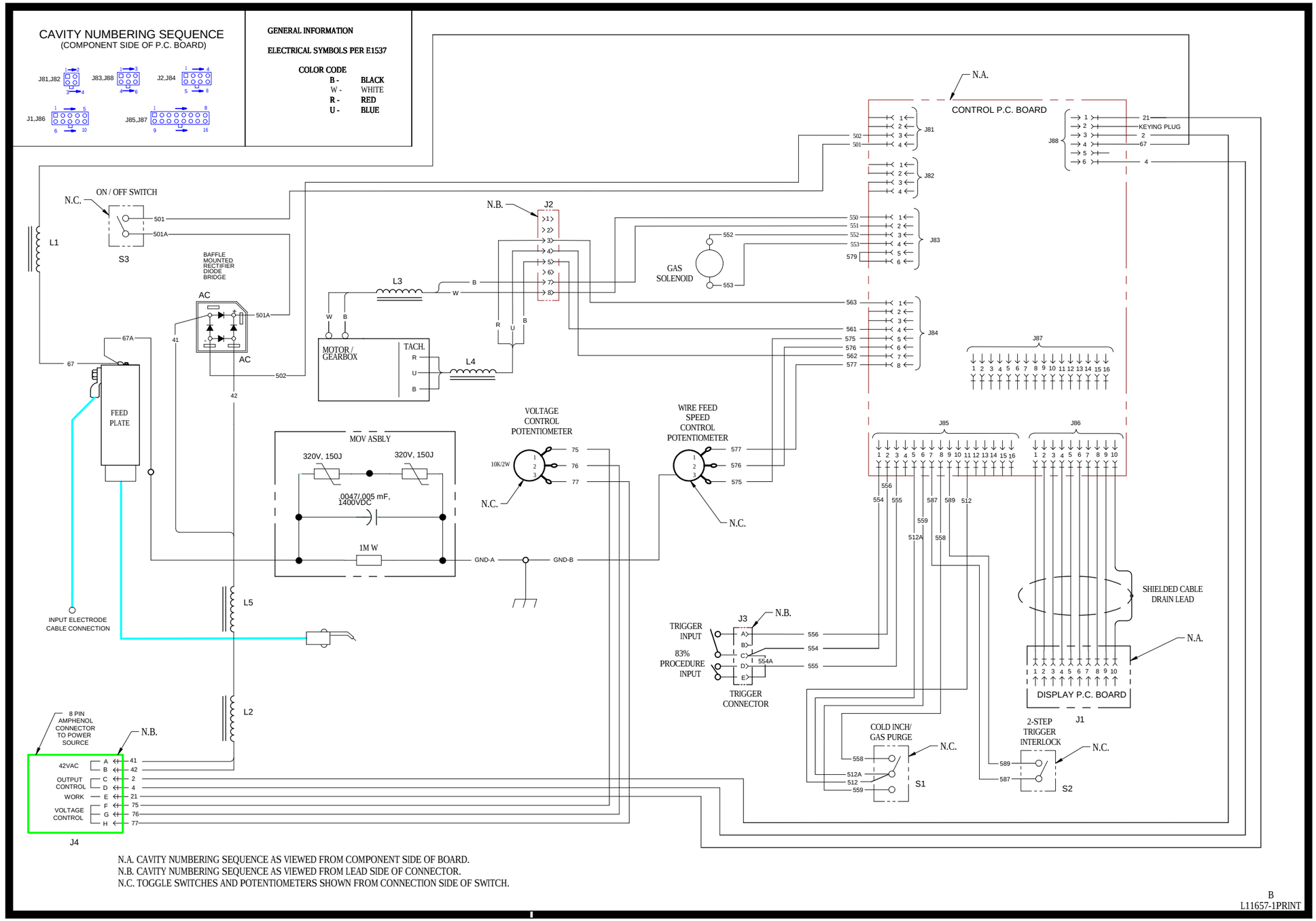

NOTE: This diagram is for reference only. It may not be accurate for all machines covered by this manual. The wiring diagram specific to your code is pasted inside one of the enclosure panels of your machine.

Return to Section TOC
Return to Master TOC

WIRING DIAGRAM - (CODE 11601) (L11657-2)

LN-15 CONTROL CABLE MODEL

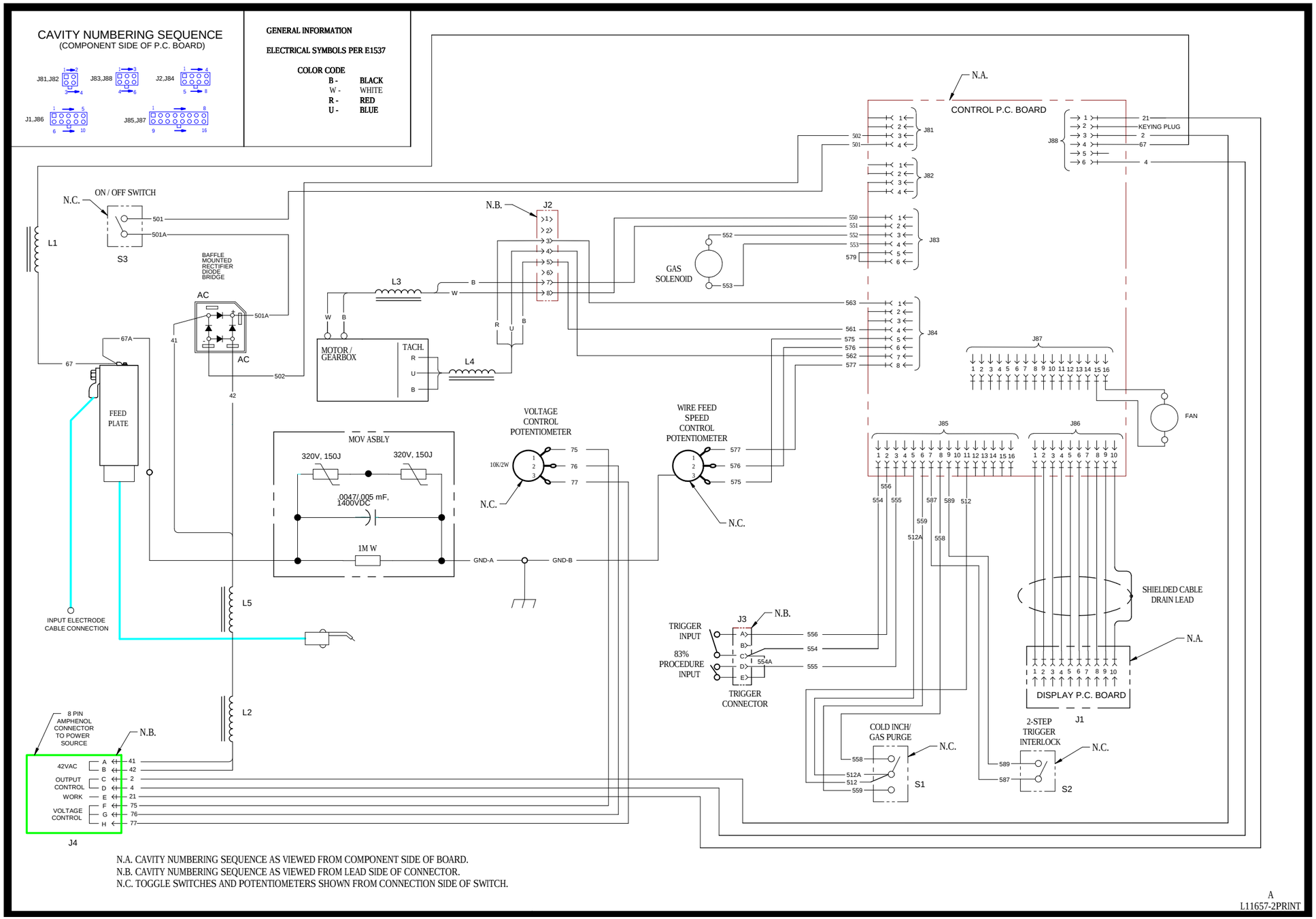

NOTE: This diagram is for reference only. It may not be accurate for all machines covered by this manual. The wiring diagram specific to your code is pasted inside one of the enclosure panels of your machine.

Return to Section TOC
Return to Master TOC

SCHEMATIC - (CODE 11033,11035) (G4198-1)

G4198-1

ENGINEERING CONTROLLED RELEASED A.03 FROM "X"
MANUFACTURER: No

General Notes:

- Codes 10864,11033 & 11035 do not support the high/low speed gear change. Only the high speed (1.8" diameter) gear may be used.

Error Code	Description	Cause and Remedy
Err 0081	Average motor Over-current shutdown	The wire drive has exceeded the current rating: • 10 amps for 0.5 seconds or • 3.5 amps for 10 seconds. Wait 45 seconds for the error to reset. Reduce the current load on the motor by: • Verifying the electrode slides easily through the liner of the gun. • Reduce the spindle brake resistance. • Reduce the amount of tension in the wire drive pressure arm. • Use only Lincoln electrodes.
Err 0086	Trigger lockout	The voltage into the feed head board exceeds 150 VDC. Some inverters and choppers may have spikes on the output that charge the capacitors inside the LN-15 beyond limits. If this error occurs, lower the OCV of the power source. It may be likely that a different power source is required.

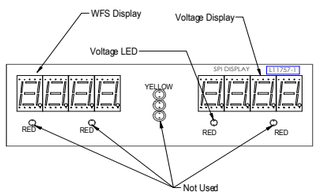

The display board communicates to the feedhead board through the SPI bus. Only the power supply signals can be monitored during servicing.

The WFS always shows the present WFS.

The voltage display shows the voltage while welding, plus holds the voltage for 5 seconds after the weld. It shows "- - -" when idle. A negative "-" sign will automatically be shown when welding with reverse polarity procedures.

All the LEDs, including those not used, will briefly light on power up. The LED's not used are visible behind the nameplate when lit.

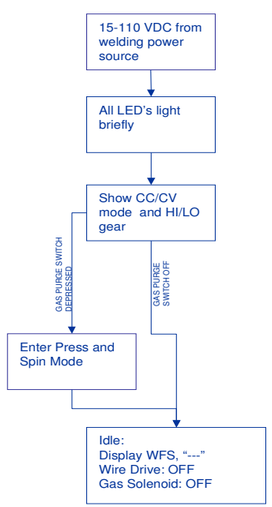

LN-15 ACROSS THE ARC MODEL

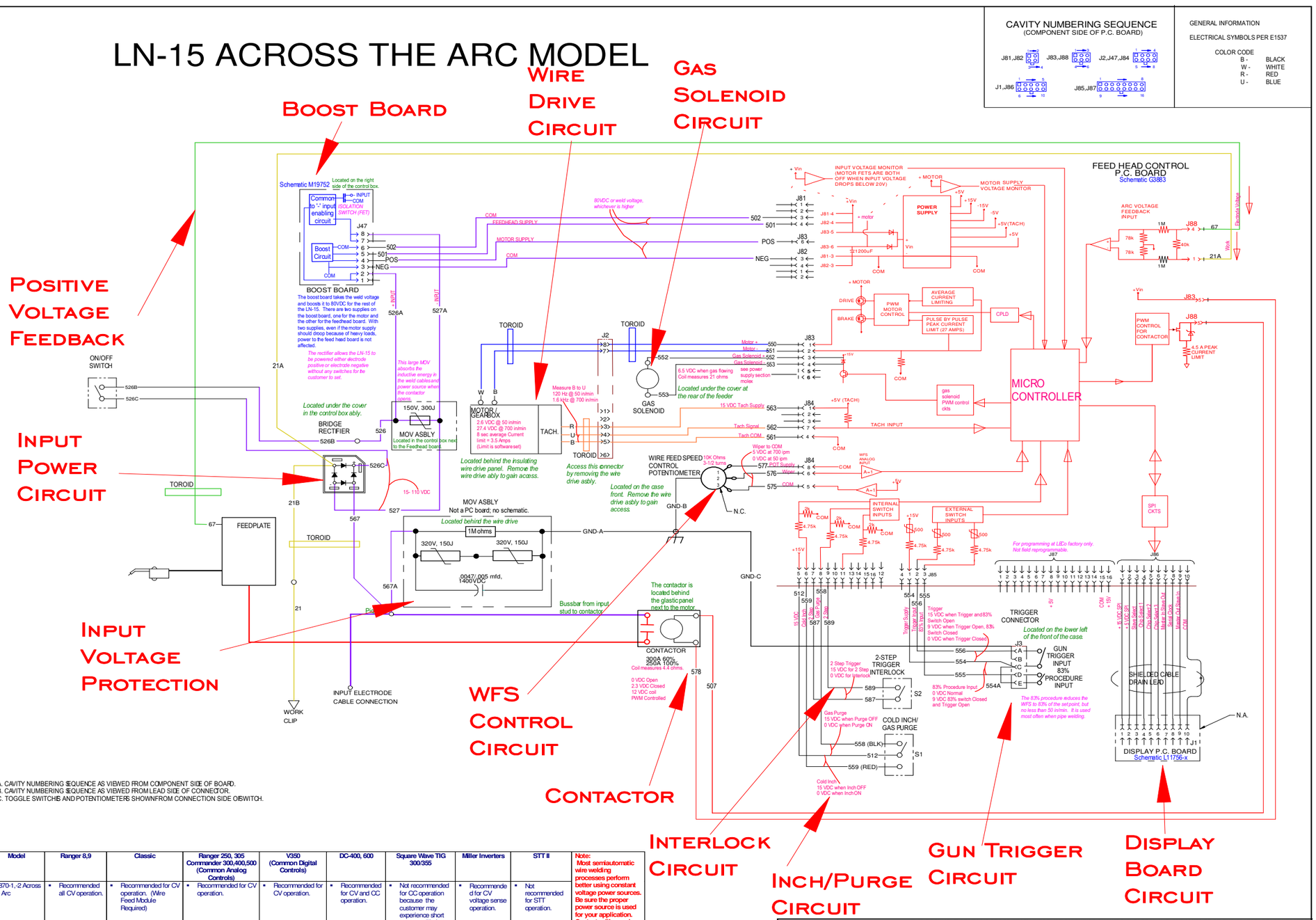

N.A. CAVITY NUMBERING SEQUENCE AS VIEWED FROM COMPONENT SIDE OF BOARD.
N.B. CAVITY NUMBERING SEQUENCE AS VIEWED FROM LEAD SIDE OF CONNECTOR.
N.C. TOGGLE SWITCHES AND POTENTIOMETERS SHOWN FROM CONNECTION SIDE OF SWITCH.

Model	Ranger 8,9	Classic	Ranger 250, 305 Commander 300,400,500 (Common Analog Controls)	V350 (Common Digital Controls)	DC-400, 600	Square Wave TIG 300/355	Miller Inverters	STT II	Note:
K1870-1,-2 Across the Arc	• Recommended all CV operation.	• Recommended for CV operation. (Wire Feed Module Required)	• Recommended for CV operation.	• Recommended for CV operation.	• Recommended for CV and CC operation.	• Not recommended for CC operation because the customer may experience short contactor life from inductive nature of the power source.	• Recommended for CV voltage sense operation.	• Not recommended for STT operation.	Most semiautomatic wire welding processes perform better using constant voltage power sources. Be sure the proper power source is used for your application. Contactor life may be shortened in applications using CC machines with high OCV.

PROPRIETARY & CONFIDENTIAL: THIS DOCUMENT CONTAINS PROPRIETARY INFORMATION OWNED BY LINCOLN GLOBAL, INC. AND MAY NOT BE DUPLICATED, COMMUNICATED TO OTHER PARTIES OR USED FOR ANY PURPOSE WITHOUT THE EXPRESS WRITTEN PERMISSION OF LINCOLN GLOBAL, INC.

UNLESS OTHERWISE SPECIFIED TOLERANCES MANUFACTURING TOLERANCE PER E0056 ON 2 PLACE DECIMALS IS ± .02 ON 3 PLACE DECIMALS IS ± .002 ON ALL ANGLES IS ± .5 OF A DEGREE MATERIAL TOLERANCE IS ± .002 & GREE WITH PUBLISHED STANDARDS
DO NOT SCALE THIS DRAWING

DESIGN INFORMATION	REFERENCE:	EQUIPMENT TYPE:	LN-15 (ACROSS THE ARC)	PAGE 1 OF 1	
DRAWN BY: E. ENYEDY/KJ	G4198	SUBJECT:	MACHINE SCHEMATIC	DOCUMENT NUMBER: G4198-1	DOCUMENT REVISION: A
ENGINEER: E. ENYEDY	SCALE: NONE	MATERIAL DISPOSITION: NA	APPROVAL DATE: 05/27/2003	PROJECT NUMBER: CRM35166	
APPROVED:					

SOLID EDGE

NOTE: This diagram is for reference only. It may not be accurate for all machines covered by this manual.

Return to Section TOC
Return to Master TOC

SCHEMATIC - (CODE 11600) (G4198-2)

G4198-2 | ENGINEERING CONTROLLED MANUFACTURER: No | CHANGE DETAIL: NEW

General Notes:

- Codes 10864,11033 & 11035 do not support the high/low speed gear change. Only the high speed (1.8" diameter) gear may be used.

Error Code	Description	Cause and Remedy
Err 0081	Average motor Over-current shutdown	The wire drive has exceeded the current rating: ▪ 10 amps for 0.5 seconds or ▪ 3.5 amps for 10 seconds. Wait 45 seconds for the error to reset. Reduce the current load on the motor by: ▪ Verifying the electrode slides easily through the liner of the gun. ▪ Reduce the spindle brake resistance. ▪ Reduce the amount of tension in the wire drive pressure arm. ▪ Use only Lincoln electrodes.
Err 0086	Trigger lockout	The voltage into the feed head board exceeds 150 VDC. Some inverters and choppers may have spikes on the output that charge the capacitors inside the LN-15 beyond limits. If this error occurs, lower the OCV of the power source. It may be likely that a different power source is required.

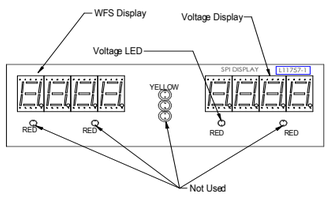

The display board communicates to the feedhead board through the SPI bus. Only the power supply signals can be monitored during servicing

The WFS always shows the present WFS.

The voltage display shows the voltage while welding, plus holds the voltage for 5 seconds after the weld. It shows "- - -" when idle. A negative "-" sign will automaticallybe shown when welding with reverse polarity procedures.

All the LEDs, including those not used, will briefly light on power up. The LED's not used are visible behind the nameplate when lit.

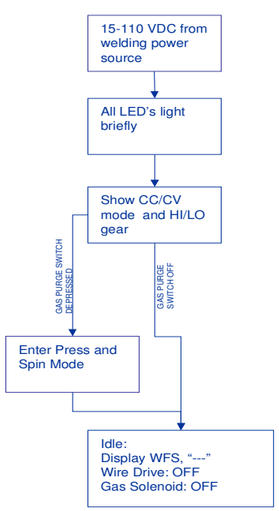

LN-15 ACROSS THE ARC MODEL

Boost Board

Wire Drive Circuit

Gas Solenoid Circuit

Positive Voltage Feedback

Input Power Circuit

Input Voltage Protection

WFS Control Circuit

Contactor

Interlock Circuit

Inch/Purge Circuit

Gun Trigger Circuit

Display Board Circuit

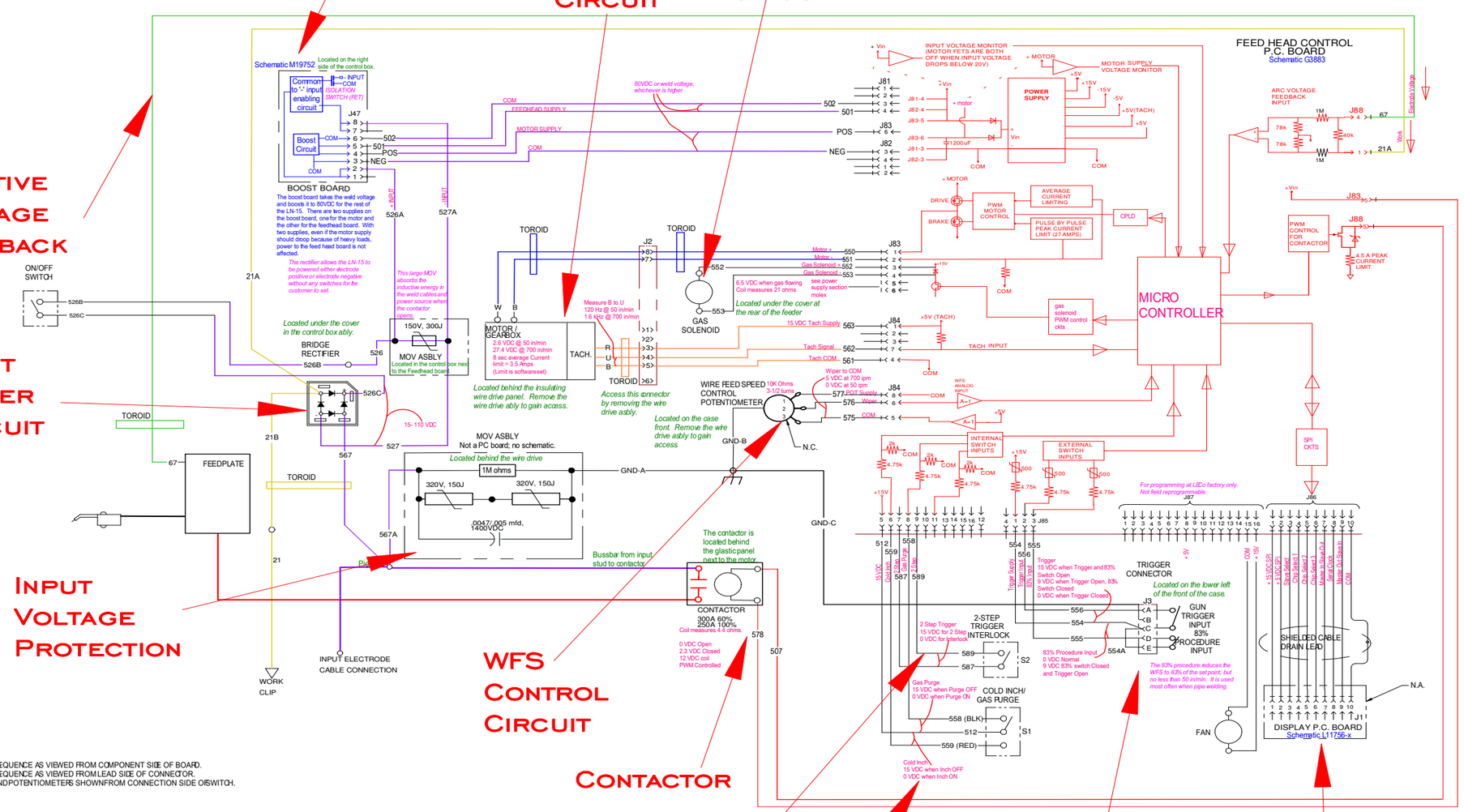

N.A. CAVITY NUMBERING SEQUENCE AS VIEWED FROM COMPONENT SIDE OF BOARD.
N.B. CAVITY NUMBERING SEQUENCE AS VIEWED FROM LEAD SIDE OF CONNECTOR.
N.C. TOGGLE SWITCHES AND POTENTIOMETERS SHOWN FROM CONNECTION SIDE OF SWITCH.

Model	Ranger 8,9	Classic	Ranger 250, 305 Commander 300,400,500 (Common Analog Controls)	V350 (Common Digital Controls)	DC-400, 600	Square Wave TIG 300/355	Miller Inverters	STT II	Note:
K1870-1,-2 Across the Arc	▪ Recommended all CV operation.	▪ Recommended for CV operation. (Wire Feed Module Required)	▪ Recommended for CV operation.	▪ Recommended for CV operation.	▪ Recommended for CV and CC operation.	▪ Not recommended for CC operation because the customer may experience short contactor life from inductive nature of the power source.	▪ Recommended for CV voltage sense operation.	▪ Not recommended for STT operation.	Most semiautomatic wire welding processes perform better using constant voltage power sources. Be sure the proper power source is used for your application. Contactor life may be shortened in applications using CC machines with high CCV.

CAVITY NUMBERING SEQUENCE (COMPONENT SIDE OF P.C. BOARD)

J81,J82 J83,J88 J2,J47,J84 J1,J86 J85,J87

GENERAL INFORMATION

ELECTRICAL SYMBOLS PER E1537

COLOR CODE
B - BLACK
W - WHITE
R - RED
U - BLUE

PROPRIETARY & CONFIDENTIAL: THIS DOCUMENT CONTAINS PROPRIETARY INFORMATION OWNED BY LINCOLN GLOBAL, INC. AND MAY NOT BE DUPLICATED, COMMUNICATED TO OTHER PARTIES OR USED FOR ANY PURPOSE WITHOUT THE EXPRESS WRITTEN PERMISSION OF LINCOLN GLOBAL, INC.

MANUFACTURING TOLERANCE PER E2026 UNLESS OTHERWISE SPECIFIED TOLERANCE ON 2 PLACE DECIMALS IS ± .02 in. (± 0.5 mm) ON 3 PLACE DECIMALS IS ± .002 in. (± 0.05 mm) ON ALL ANGLES IS ± 5.0F A DEGREE MATERIAL TOLERANCE (*1) TO AGREE WITH PUBLISHED STANDARDS.

DO NOT SCALE THIS DRAWING

CONTROL: CLEVELAND | DRAWN BY: Ivory | ENGINEER: | APPROVED: DRS | SCALE: NONE IF PRINTED @ A1 SIZE | UNITS: INCH

EQUIPMENT TYPE: LN-15 (ACROSS THE ARC) | PAGE 1 OF 1

SUBJECT: MACHINE SCHEMATIC

MATERIAL DISPOSITION: NA | APPROVAL DATE: 3-12-2010 | PROJECT NUMBER: CRM41256-B | REFERENCE: G4198-1 | DOCUMENT NUMBER: G4198-2 | DOCUMENT REVISION: A

SOLID EDGE Insight

EN-170

NOTE: This diagram is for reference only. It may not be accurate for all machines covered by this manual.

Return to Section TOC Return to Master TOC

SCHEMATIC - (CODE 11034,11036) (G4197-1)

G4197-1 | ENGINEERING CONTROLLED | RELEASED A.02 FROM "X"
MANUFACTURER: No

General Notes:

- Codes 10865,11034 & 11036 do not support the high/low speed gear change. Only the high speed (1.8" diameter) gear may be used.

Error Code	Description	Cause and Remedy
Err 0081	Average motor Over-current shutdown	The wire drive has exceeded the current rating: ▪ 10 amps for 0.5 seconds or ▪ 3.5 amps for 10 seconds. Wait 45 seconds for the error to reset. Reduce the current load on the motor by: ▪ Verifying the electrode slides easily through the liner of the gun. ▪ Reduce the spindle brake resistance. ▪ Reduce the amount of tension in the wire drive pressure arm. ▪ Use only Lincoln electrodes.
Err 0086	Trigger lockout	The voltage into the feed head board exceeds 150 VDC. This error should never occur on the Control Cable LN-15 because it gets is power from rectified 42 VAC (approx. 62 VDC).

Platform	Ranger 8/Ranger 9	Classic	Ranger 250, 305 Commander 300,400,500 (Common Analog Controls)	V350 (Common Digital Controls)	DC-400, 600	Square Wave TIG 300/355	STT II	Note:
K1871-1,-2 Control Cable	▪ N.A. The Ranger 8 does not have a 14 pin remote.	▪ Requires Wire Feed Module and 42VAC transformer kit	▪ Recommended for CV and CC operation.	▪ Recommended for CV, Pulse and CC operation.	▪ Recommended for CV and CC operation.	▪ N.A. The SQ TIG 300/355 does not have a 14 pin remote.	▪ Recommended for STT operation	Most semiautometic wire welding processes perform better using constant voltage power sources. Be sure the proper power source is used for your application.

CAVITY NUMBERING SEQUENCE
(COMPONENT SIDE OF P.C. BOARD)

GENERAL INFORMATION
ELECTRICAL SYMBOLS PER E1537

COLOR CODE
B - BLACK
W - WHITE
R - RED
U - BLUE

LN-15 CONTROL CABLE MODEL

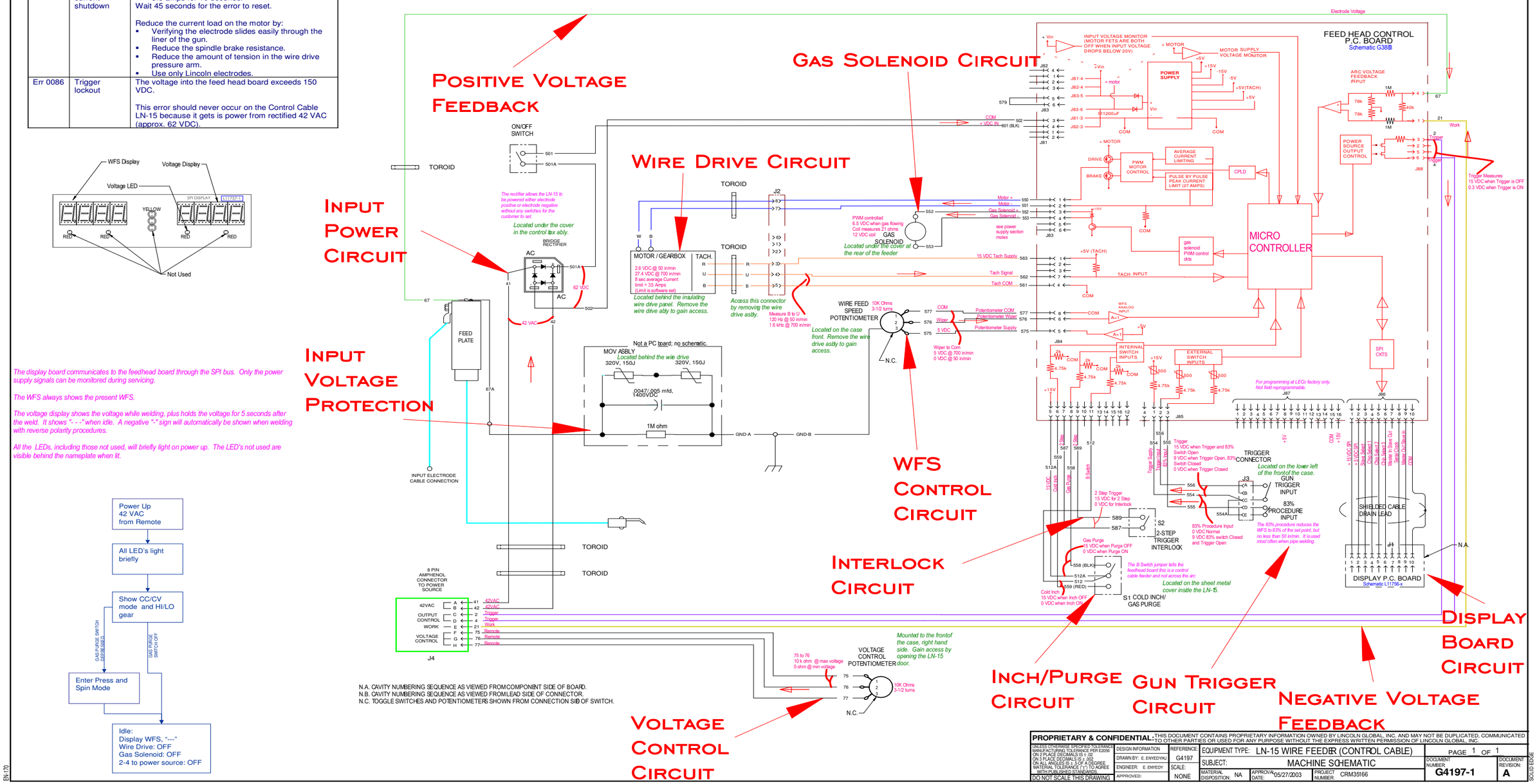

NOTE: This diagram is for reference only. It may not be accurate for all machines covered by this manual.

SCHEMATIC - (CODE 11601) (G4197-2)

G4198-2 | ENGINEERING CONTROLLED MANUFACTURER: No | CHANGE DETAIL: NEW

General Notes:

- Codes 10864,11033 & 11035 do not support the high/low speed gear change. Only the high speed (1.8" diameter) gear may be used.

Error Code	Description	Cause and Remedy
Err 0081	Average motor Over-current shutdown	The wire drive has exceeded the current rating: • 10 amps for 0.5 seconds or • 3.5 amps for 10 seconds. Wait 45 seconds for the error to reset. Reduce the current load on the motor by: • Verifying the electrode slides easily through the liner of the gun. • Reduce the spindle brake resistance. • Reduce the amount of tension in the wire drive pressure arm. • Use only Lincoln electrodes.
Err 0086	Trigger lockout	The voltage into the feed head board exceeds 150 VDC. Some inverters and choppers may have spikes on the output that charge the capacitors inside the LN-15 beyond limits. If this error occurs, lower the OCV of the power source. It may be likely that a different power source is required.

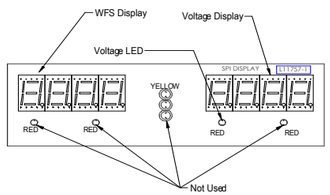

The display board communicates to the feedhead board through the SPI bus. Only the power supply signals can be monitored during servicing.

The WFS always shows the present WFS.

The voltage display shows the voltage while welding, plus holds the voltage for 5 seconds after the weld. It shows "- - -" when idle. A negative "-" sign will automatically be shown when welding with reverse polarity procedures.

All the LEDs, including those not used, will briefly light on power up. The LED's not used are visible behind the nameplate when lit.

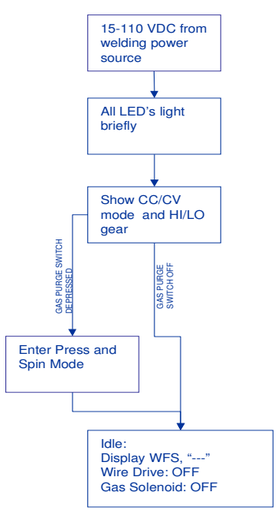

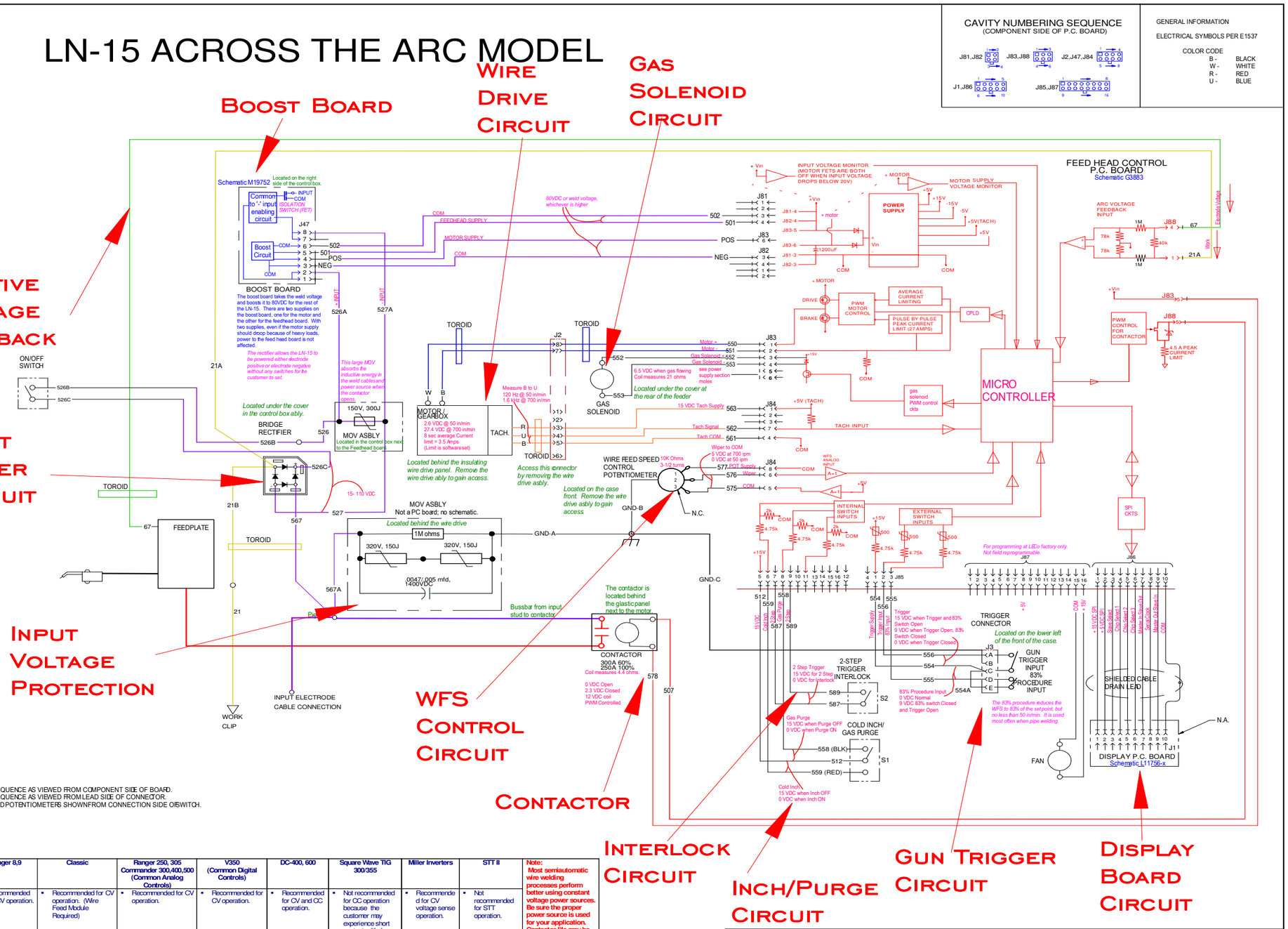

Model	Ranger 8,9	Classic	Ranger 250, 305 Commander 300,400,500 (Common Analog Controls)	V350 (Common Digital Controls)	DC-400, 600	Square Wave TIG 300/355	Miller Inverters	STT II	Note:
K1870-1,-2 Across the Arc	• Recommended all CV operation.	• Recommended for CV operation. (Wire Feed Module Required)	• Recommended for CV operation.	• Recommended for CV operation.	• Recommended for CV and CC operation.	• Not recommended for CC operation because the customer may experience short contactor life from inductive nature of the power source.	• Recommended for CV voltage sense operation.	• Not recommended for STT operation.	Most semiautomatic wire welding processes perform better using constant voltage power sources. Be sure the proper power source is used for your application. Contactor life may be shortened in applications using CC machines with high OCV.

NOTE: This diagram is for reference only. It may not be accurate for all machines covered by this manual.

SCHEMATIC - BOOST PC BOARD (ACROSS THE ARC MODELS ONLY) (L11818)

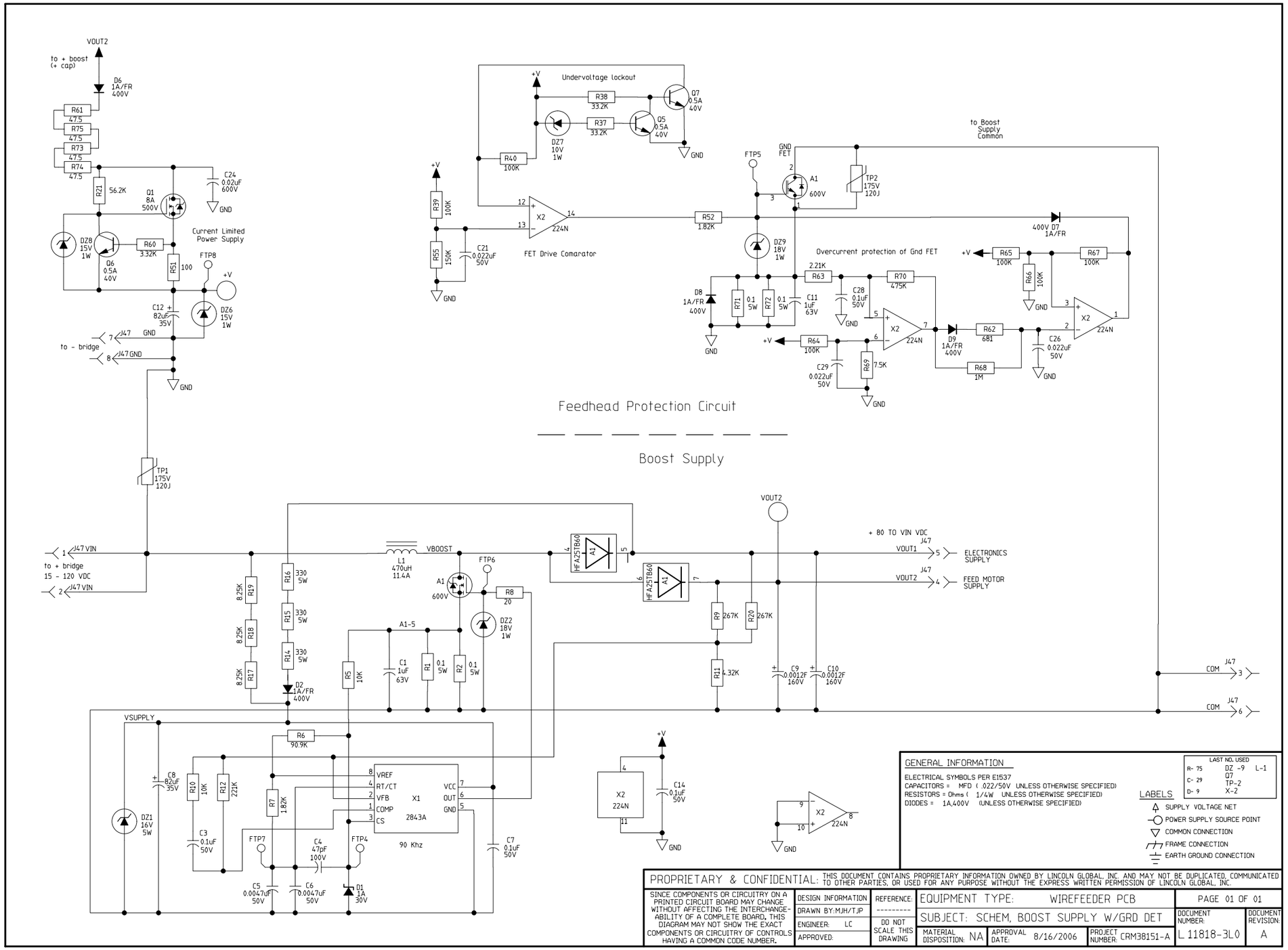

NOTE: This diagram is for reference only. It may not be accurate for all machines covered by this manual.

SCHEMATIC - DISPLAY PC BOARD - ALL CODES (L11756)

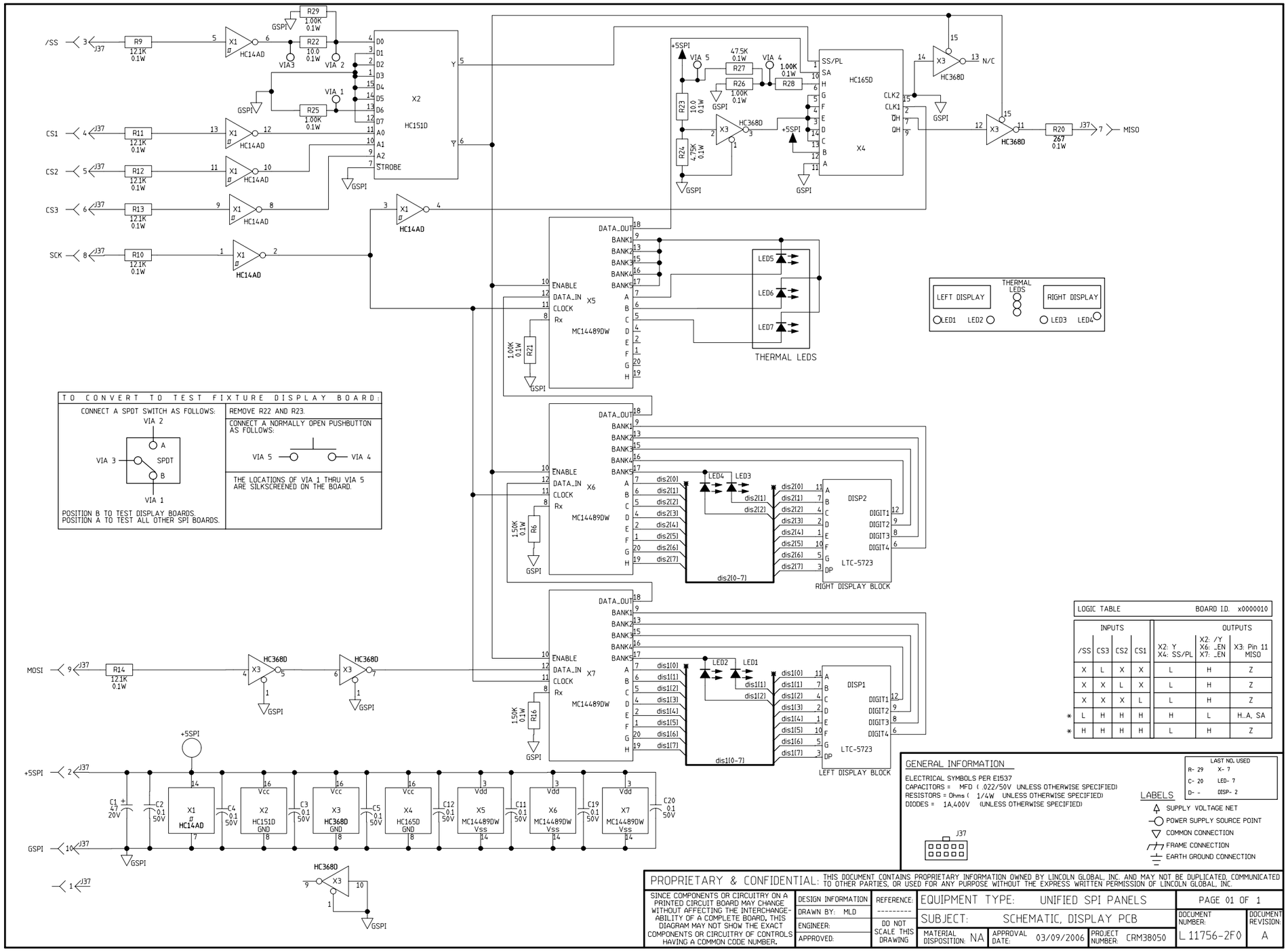

NOTE: This diagram is for reference only. It may not be accurate for all machines covered by this manual.

SCHEMATIC - FEEDHEAD PC BOARD - ALL CODES (G3883 PG1)

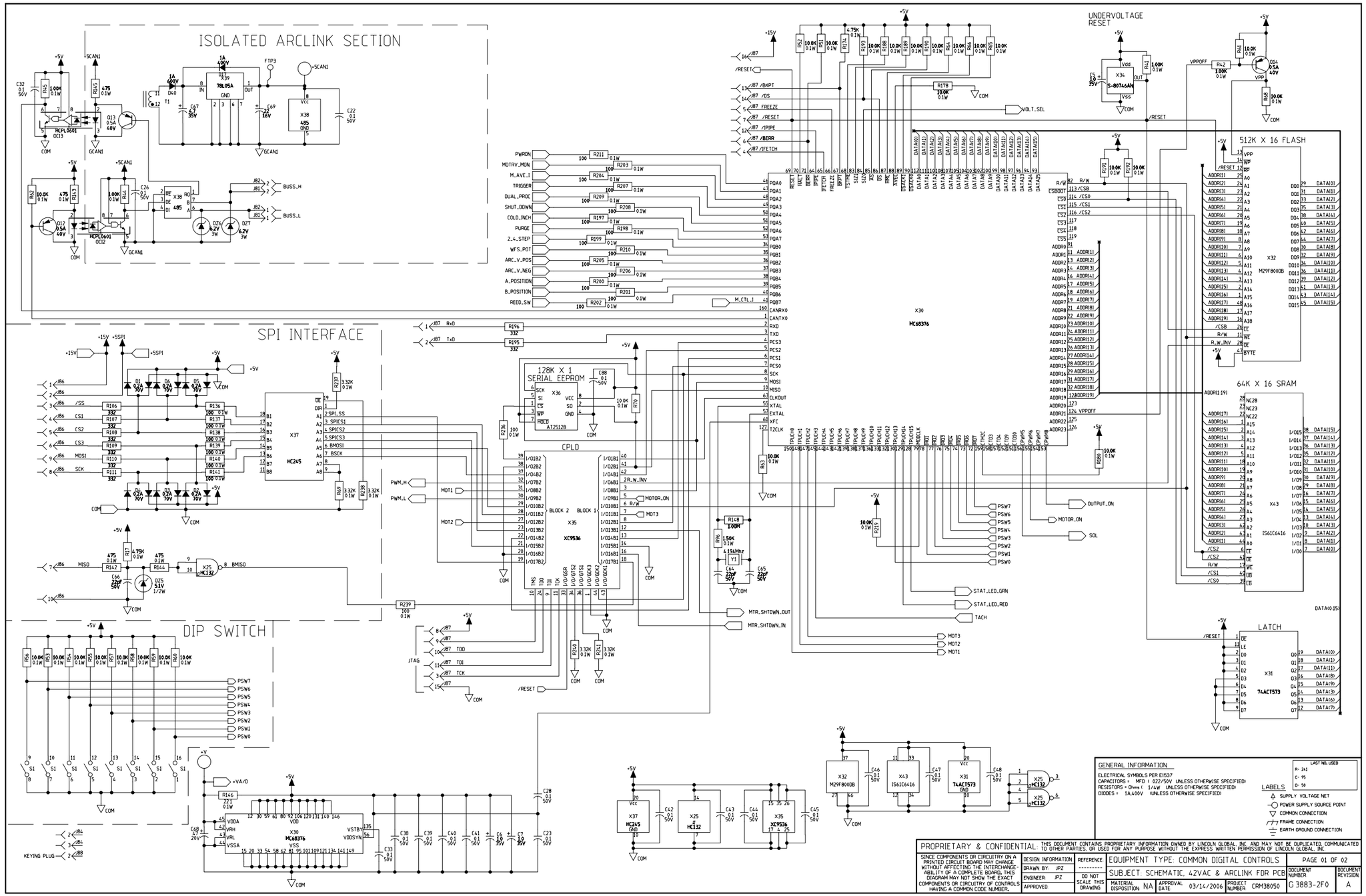

NOTE: This diagram is for reference only. It may not be accurate for all machines covered by this manual.

SCHEMATIC - FEEDHEAD PC BOARD - ALL CODES (G3883 PG2)

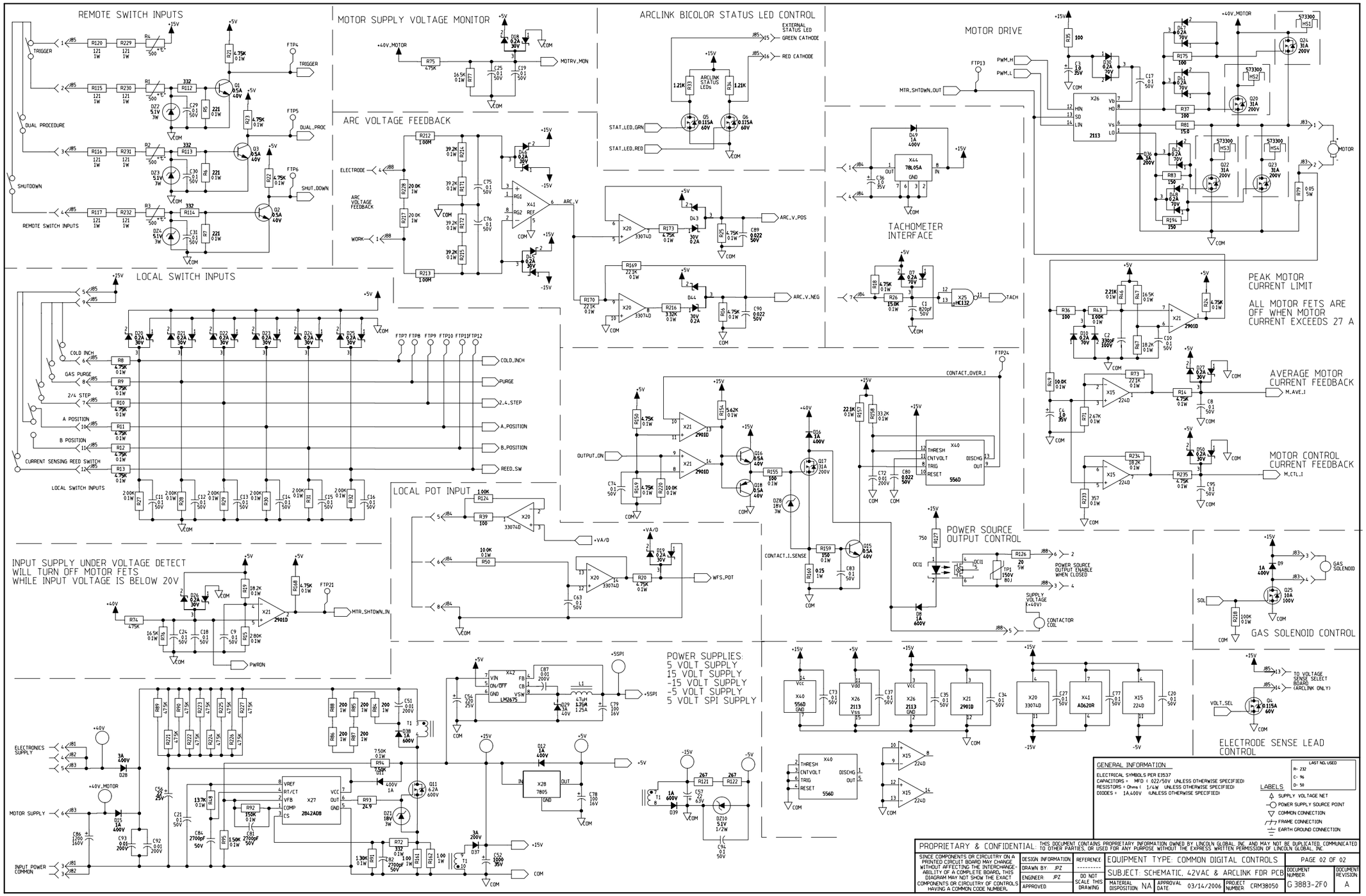

NOTE: This diagram is for reference only. It may not be accurate for all machines covered by this manual.