Operator's Manual

POWER WAVE® STT® MODULE

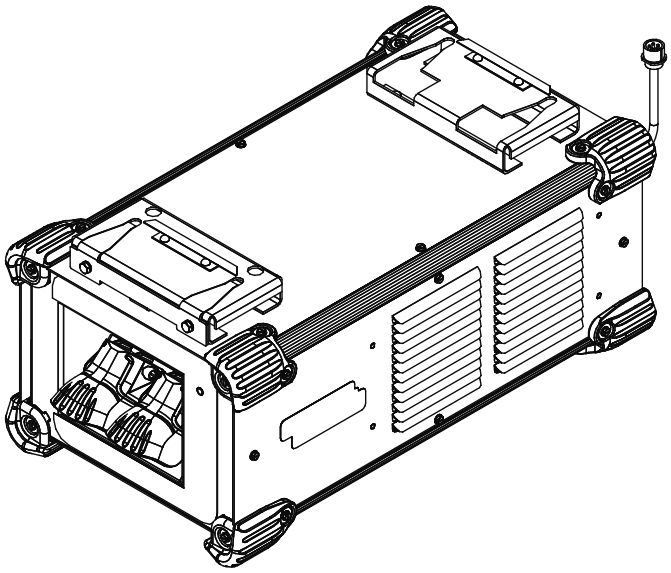

For use with machines having Code Numbers:

12852, 13706 (North American)
12853, 13708 (CE)
12854, 13707 (CCC)

GENUINE LINCOLN PARTS™

Register your machine:
www.lincolnelectric.com/register

Authorized Service and Distributor Locator:
www.lincolnelectric.com/locator

Save for future reference

Date Purchased

Code: (ex: 10859)

Serial: (ex: U1060512345)

Need Help? Call 1.888.935.3877
to talk to a Service Representative

Hours of Operation:
8:00 AM to 6:00 PM (ET) Mon. thru Fri.

After hours?
Use "Ask the Experts" at lincolnelectric.com
A Lincoln Service Representative will contact you no later than the following business day.

For Service outside the USA:
Email: globalservice@lincolnelectric.com

IM10492 | Issue Date Mar-24

© Lincoln Global, Inc. All Rights Reserved.

THE LINCOLN ELECTRIC COMPANY
22801 St. Clair Avenue • Cleveland, OH • 44117-1199 • U.S.A.
Phone: +1.216.481.8100 • www.lincolnelectric.com

THANK YOU FOR SELECTING A QUALITY PRODUCT BY LINCOLN ELECTRIC.

PLEASE EXAMINE CARTON AND EQUIPMENT FOR DAMAGE IMMEDIATELY

When this equipment is shipped, title passes to the purchaser upon receipt by the carrier. Consequently, claims for material damaged in shipment must be made by the purchaser against the transportation company at the time the shipment is received.

SAFETY DEPENDS ON YOU

Lincoln arc welding and cutting equipment is designed and built with safety in mind. However, your overall safety can be increased by proper installation ... and thoughtful operation on your part. **DO NOT INSTALL, OPERATE OR REPAIR THIS EQUIPMENT WITHOUT READING THIS MANUAL AND THE SAFETY PRECAUTIONS CONTAINED THROUGHOUT.** And, most importantly, think before you act and be careful.

⚠ WARNING

This statement appears where the information must be followed exactly to avoid serious personal injury or loss of life.

⚠ CAUTION

This statement appears where the information must be followed to avoid minor personal injury or damage to this equipment.

KEEP YOUR HEAD OUT OF THE FUMES.

DON'T get too close to the arc. Use corrective lenses if necessary to stay a reasonable distance away from the arc.

READ and obey the Safety Data Sheet (SDS) and the warning label that appears on all containers of welding materials.

USE ENOUGH VENTILATION or exhaust at the arc, or both, to keep the fumes and gases from your breathing zone and the general area.

IN A LARGE ROOM OR OUTDOORS, natural ventilation may be adequate if you keep your head out of the fumes (See below).

USE NATURAL DRAFTS or fans to keep the fumes away from your face.

If you develop unusual symptoms, see your supervisor. Perhaps the welding atmosphere and ventilation system should be checked.

WEAR CORRECT EYE, EAR & BODY PROTECTION

PROTECT your eyes and face with welding helmet properly fitted and with proper grade of filter plate (See ANSI Z49.1).

PROTECT your body from welding spatter and arc flash with protective clothing including woolen clothing, flame-proof apron and gloves, leather leggings, and high boots.

PROTECT others from splatter, flash, and glare with protective screens or barriers.

IN SOME AREAS, protection from noise may be appropriate.

BE SURE protective equipment is in good condition.

Also, wear safety glasses in work area **AT ALL TIMES.**

SPECIAL SITUATIONS

DO NOT WELD OR CUT containers or materials which previously had been in contact with hazardous substances unless they are properly cleaned. This is extremely dangerous.

DO NOT WELD OR CUT painted or plated parts unless special precautions with ventilation have been taken. They can release highly toxic fumes or gases.

Additional precautionary measures

PROTECT compressed gas cylinders from excessive heat, mechanical shocks, and arcs; fasten cylinders so they cannot fall.

BE SURE cylinders are never grounded or part of an electrical circuit.

REMOVE all potential fire hazards from welding area.

ALWAYS HAVE FIRE FIGHTING EQUIPMENT READY FOR IMMEDIATE USE AND KNOW HOW TO USE IT.

SECTION A: WARNINGS

CALIFORNIA PROPOSITION 65 WARNINGS

WARNING: Breathing diesel engine exhaust exposes you to chemicals known to the State of California to cause cancer and birth defects, or other reproductive harm.

- Always start and operate the engine in a well-ventilated area.
- If in an exposed area, vent the exhaust to the outside.
- Do not modify or tamper with the exhaust system.
- Do not idle the engine except as necessary.

For more information go to www.P65 warnings.ca.gov/diesel

WARNING: This product, when used for welding or cutting, produces fumes or gases which contain chemicals known to the State of California to cause birth defects and, in some cases, cancer. (California Health & Safety Code § 25249.5 *et seq.)*

WARNING: Cancer and Reproductive Harm www.P65warnings.ca.gov

ARC WELDING CAN BE HAZARDOUS. PROTECT YOURSELF AND OTHERS FROM POSSIBLE SERIOUS INJURY OR DEATH. KEEP CHILDREN AWAY. PACEMAKER WEARERS SHOULD CONSULT WITH THEIR DOCTOR BEFORE OPERATING.

Read and understand the following safety highlights. For additional safety information, it is strongly recommended that you purchase a copy of "Safety in Welding & Cutting - ANSI Standard Z49.1" from the American Welding Society, P.O. Box 351040, Miami, Florida 33135 or CSA Standard W117.2. A Free copy of "Arc Welding Safety" booklet E205 is available from the Lincoln Electric Company, 22801 St. Clair Avenue, Cleveland, Ohio 44117-1199.

BE SURE THAT ALL INSTALLATION, OPERATION, MAINTENANCE AND REPAIR PROCEDURES ARE PERFORMED ONLY BY QUALIFIED INDIVIDUALS.

FOR ENGINE POWERED EQUIPMENT.

1.a. Turn the engine off before troubleshooting and maintenance work unless the maintenance work requires it to be running.

1.b. Operate engines in open, well-ventilated areas or vent the engine exhaust fumes outdoors.

1.c. Do not add the fuel near an open flame welding arc or when the engine is running. Stop the engine and allow it to cool before refueling to prevent spilled fuel from vaporizing on contact with hot engine parts and igniting. Do not spill fuel when filling tank. If fuel is spilled, wipe it up and do not start engine until fumes have been eliminated.

1.d. Keep all equipment safety guards, covers and devices in position and in good repair. Keep hands, hair, clothing and tools away from V-belts, gears, fans and all other moving parts when starting, operating or repairing equipment.

1.e. In some cases it may be necessary to remove safety guards to perform required maintenance. Remove guards only when necessary and replace them when the maintenance requiring their removal is complete. Always use the greatest care when working near moving parts.

1.f. Do not put your hands near the engine fan. Do not attempt to override the governor or idler by pushing on the throttle control rods while the engine is running.

1.g. To prevent accidentally starting gasoline engines while turning the engine or welding generator during maintenance work, disconnect the spark plug wires, distributor cap or magneto wire as appropriate.

1.h. To avoid scalding, do not remove the radiator pressure cap when the engine is hot.

1.i. Using a generator indoors CAN KILL YOU IN MINUTES.

1.j. Generator exhaust contains carbon monoxide. This is a poison you cannot see or smell.

1.k. NEVER use inside a home or garage, EVEN IF doors and windows are open.

1.l. Only use OUTSIDE and far away from windows, doors and vents.

1.m. Avoid other generator hazards. READ MANUAL BEFORE USE.

ELECTRIC AND MAGNETIC FIELDS MAY BE DANGEROUS

2.a. Electric current flowing through any conductor causes localized Electric and Magnetic Fields (EMF). Welding current creates EMF fields around welding cables and welding machines

2.b. EMF fields may interfere with some pacemakers, and welders having a pacemaker should consult their physician before welding.

2.c. Exposure to EMF fields in welding may have other health effects which are now not known.

2.d. All welders should use the following procedures in order to minimize exposure to EMF fields from the welding circuit:

2.d.1. Route the electrode and work cables together - Secure them with tape when possible.

2.d.2. Never coil the electrode lead around your body.

2.d.3. Do not place your body between the electrode and work cables. If the electrode cable is on your right side, the work cable should also be on your right side.

2.d.4. Connect the work cable to the workpiece as close as possible to the area being welded.

2.d.5. Do not work next to welding power source.

ELECTRIC SHOCK CAN KILL.

3.a. The electrode and work (or ground) circuits are electrically “hot” when the welder is on. Do not touch these “hot” parts with your bare skin or wet clothing. Wear dry, hole-free gloves to insulate hands.

3.b. Insulate yourself from work and ground using dry insulation. Make certain the insulation is large enough to cover your full area of physical contact with work and ground.

In addition to the normal safety precautions, if welding must be performed under electrically hazardous conditions (in damp locations or while wearing wet clothing; on metal structures such as floors, gratings or scaffolds; when in cramped positions such as sitting, kneeling or lying, if there is a high risk of unavoidable or accidental contact with the workpiece or ground) use the following equipment:

- Semiautomatic DC Constant Voltage (Wire) Welder.
- DC Manual (Stick) Welder.
- AC Welder with Reduced Voltage Control.

3.c. In semiautomatic or automatic wire welding, the electrode, electrode reel, welding head, nozzle or semiautomatic welding gun are also electrically “hot”.

3.d. Always be sure the work cable makes a good electrical connection with the metal being welded. The connection should be as close as possible to the area being welded.

3.e. Ground the work or metal to be welded to a good electrical (earth) ground.

3.f. Maintain the electrode holder, work clamp, welding cable and welding machine in good, safe operating condition. Replace damaged insulation.

3.g. Never dip the electrode in water for cooling.

3.h. Never simultaneously touch electrically “hot” parts of electrode holders connected to two welders because voltage between the two can be the total of the open circuit voltage of both welders.

3.i. When working above floor level, use a safety belt to protect yourself from a fall should you get a shock.

3.j. Also see Items 6.c. and 8.

ARC RAYS CAN BURN.

4.a. Use a shield with the proper filter and cover plates to protect your eyes from sparks and the rays of the arc when welding or observing open arc welding. Headshield and filter lens should conform to ANSI Z87. I standards.

4.b. Use suitable clothing made from durable flame-resistant material to protect your skin and that of your helpers from the arc rays.

4.c. Protect other nearby personnel with suitable, non-flammable screening and/or warn them not to watch the arc nor expose themselves to the arc rays or to hot spatter or metal.

FUMES AND GASES CAN BE DANGEROUS.

5.a. Welding may produce fumes and gases hazardous to health. Avoid breathing these fumes and gases. When welding, keep your head out of the fume. Use enough ventilation and/or exhaust at the arc to keep fumes and gases away from the breathing zone. **When welding hardfacing (see instructions on container or SDS) or on lead or cadmium plated steel and other metals or coatings which produce highly toxic fumes, keep exposure as low as possible and within applicable OSHA PEL and ACGIH TLV limits using local exhaust or mechanical ventilation unless exposure assessments indicate otherwise. In confined spaces or in some circumstances, outdoors, a respirator may also be required. Additional precautions are also required when welding on galvanized steel.**

5. b. The operation of welding fume control equipment is affected by various factors including proper use and positioning of the equipment, maintenance of the equipment and the specific welding procedure and application involved. Worker exposure level should be checked upon installation and periodically thereafter to be certain it is within applicable OSHA PEL and ACGIH TLV limits.

5.c. Do not weld in locations near chlorinated hydrocarbon vapors coming from degreasing, cleaning or spraying operations. The heat and rays of the arc can react with solvent vapors to form phosgene, a highly toxic gas, and other irritating products.

5.d. Shielding gases used for arc welding can displace air and cause injury or death. Always use enough ventilation, especially in confined areas, to insure breathing air is safe.

5.e. Read and understand the manufacturer’s instructions for this equipment and the consumables to be used, including the Safety Data Sheet (SDS) and follow your employer’s safety practices. SDS forms are available from your welding distributor or from the manufacturer.

5.f. Also see item 1.b.

WELDING AND CUTTING SPARKS CAN CAUSE FIRE OR EXPLOSION.

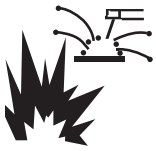

6.a. Remove fire hazards from the welding area. If this is not possible, cover them to prevent the welding sparks from starting a fire. Remember that welding sparks and hot materials from welding can easily go through small cracks and openings to adjacent areas. Avoid welding near hydraulic lines. Have a fire extinguisher readily available.

6.b. Where compressed gases are to be used at the job site, special precautions should be used to prevent hazardous situations. Refer to “Safety in Welding and Cutting” (ANSI Standard Z49.1) and the operating information for the equipment being used.

6.c. When not welding, make certain no part of the electrode circuit is touching the work or ground. Accidental contact can cause overheating and create a fire hazard.

6.d. Do not heat, cut or weld tanks, drums or containers until the proper steps have been taken to insure that such procedures will not cause flammable or toxic vapors from substances inside. They can cause an explosion even though they have been “cleaned”. For information, purchase “Recommended Safe Practices for the Preparation for Welding and Cutting of Containers and Piping That Have Held Hazardous Substances”, AWS F4.1 from the American Welding Society (see address above).

6.e. Vent hollow castings or containers before heating, cutting or welding. They may explode.

6.f. Sparks and spatter are thrown from the welding arc. Wear oil free protective garments such as leather gloves, heavy shirt, cuffless trousers, high shoes and a cap over your hair. Wear ear plugs when welding out of position or in confined places. Always wear safety glasses with side shields when in a welding area.

6.g. Connect the work cable to the work as close to the welding area as practical. Work cables connected to the building framework or other locations away from the welding area increase the possibility of the welding current passing through lifting chains, crane cables or other alternate circuits. This can create fire hazards or overheat lifting chains or cables until they fail.

6.h. Also see item 1.c.

6.I. Read and follow NFPA 51B “Standard for Fire Prevention During Welding, Cutting and Other Hot Work”, available from NFPA, 1 Batterymarch Park, PO box 9101, Quincy, MA 022690-9101.

6.j. Do not use a welding power source for pipe thawing.

CYLINDER MAY EXPLODE IF DAMAGED.

7.a. Use only compressed gas cylinders containing the correct shielding gas for the process used and properly operating regulators designed for the gas and pressure used. All hoses, fittings, etc. should be suitable for the application and maintained in good condition.

7.b. Always keep cylinders in an upright position securely chained to an undercarriage or fixed support.

7.c. Cylinders should be located:

- Away from areas where they may be struck or subjected to physical damage.
- A safe distance from arc welding or cutting operations and any other source of heat, sparks, or flame.

7.d. Never allow the electrode, electrode holder or any other electrically “hot” parts to touch a cylinder.

7.e. Keep your head and face away from the cylinder valve outlet when opening the cylinder valve.

7.f. Valve protection caps should always be in place and hand tight except when the cylinder is in use or connected for use.

7.g. Read and follow the instructions on compressed gas cylinders, associated equipment, and CGA publication P-I, “Precautions for Safe Handling of Compressed Gases in Cylinders,” available from the Compressed Gas Association, 14501 George Carter Way Chantilly, VA 20151.

FOR ELECTRICALLY POWERED EQUIPMENT.

8.a. Turn off input power using the disconnect switch at the fuse box before working on the equipment.

8.b. Install equipment in accordance with the U.S. National Electrical Code, all local codes and the manufacturer’s recommendations.

8.c. Ground the equipment in accordance with the U.S. National Electrical Code and the manufacturer’s recommendations.

Refer to http://www.lincolnelectric.com/safety for additional safety information.

Page

General Description 4
Installation ....**Section A**
Technical Specifications....A-1
Safety Precautions. A-2
Electromagnetic Compatibility....A-2
Tilting, Location and Mounting....A-2
Control Cable Connection....A-2
Connection between Power Source and STT® Module A-3
Electrode and Work Connections....A-3
Output Cable Guide Lines....A-4
Cable Inductance and its Effects on Welding A-4
Remote Sense lead Connections A-5
Connection Diagram System A-7

Operation Section B
Safety Precautions. B-1
Power-Up Sequence B-1
Duty Cycle B-1
Common Welding Procedures B-1
Recommended Processes and Limitations B-1
Recommended Processes....B-2
Process Limitations B-2
Equipment Limitations B-2
Common Equipment Packages....B-2
Case Front and Description B-3
Case Back and Description B-6

Maintenance....**Section D**
Safety Precautions....D-1
Routine Maintenance and Calibration Specification D-1

Troubleshooting....**Section E**
How to Use Troubleshooting Guide....E-1
Using the Status LED to Troubleshoot System Problems....E-2
Error Codes....E-3
On Board LED's for the STT Switch PC Board E-4
Troubleshooting Guide E-5, E-6
STT-Module Functional Test....E-7

Wiring Diagram and Dimension Print ....**Section F**

Parts List ....**parts.lincolnelectric.com**

Content/details may be changed or updated without notice. For most current Instruction Manuals, go to parts.lincolnelectric.com.

ELECTROMAGNETIC COMPATIBILITY (EMC)

CONFORMANCE

Products displaying the CE mark are in conformity with European Community Council Directive of 3 May 1989 on the approximation of the laws of the Member States relating to electromagnetic compatibility (89/336/EEC). It was manufactured in conformity with a national standard that implements a harmonized standard: EN 60974-10 Electromagnetic Compatibility (EMC) Product Standard for Arc Welding Equipment. It is for use with other Lincoln Electric equipment. It is designed for industrial and professional use.

INTRODUCTION

All electrical equipment generates small amounts of electromagnetic emission. Electrical emission may be transmitted through power lines or radiated through space, similar to a radio transmitter. When emissions are received by other equipment, electrical interference may result. Electrical emissions may affect many kinds of electrical equipment; other nearby welding equipment, radio and TV reception, numerical controlled machines, telephone systems, computers, etc. Be aware that interference may result and extra precautions may be required when a welding power source is used in a domestic establishment.

INSTALLATION AND USE

The user is responsible for installing and using the welding equipment according to the manufacturer's instructions. If electromagnetic disturbances are detected then it shall be the responsibility of the user of the welding equipment to resolve the situation with the technical assistance of the manufacturer. In some cases this remedial action may be as simple as earthing (grounding) the welding circuit, see Note. In other cases it could involve construction of an electromagnetic screen enclosing the power source and the work complete with associated input filters. In all cases electromagnetic disturbances must be reduced to the point where they are no longer troublesome.

Note: The welding circuit may or may not be earthed for safety reasons according to national codes. Changing the earthing arrangements should only be authorized by a person who is competent to access whether the changes will increase the risk of injury, e.g., by allowing parallel welding current return paths which may damage the earth circuits of other equipment.

ASSESSMENT OF AREA

Before installing welding equipment the user shall make an assessment of potential electromagnetic problems in the surrounding area. The following shall be taken into account:

a. other supply cables, control cables, signaling and telephone cables; above, below and adjacent to the welding equipment;

b. radio and television transmitters and receivers;

c. computer and other control equipment;

d. safety critical equipment, e.g., guarding of industrial equipment;

e. the health of the people around, e.g., the use of pacemakers and hearing aids;

f. equipment used for calibration or measurement

g. the immunity of other equipment in the environment. The user shall ensure that other equipment being used in the environment is compatible. This may require additional protection measures;

h. the time of day that welding or other activities are to be carried out.

The size of the surrounding area to be considered will depend on the structure of the building and other activities that are taking place. The surrounding area may extend beyond the boundaries of the premises.

METHODS OF REDUCING EMISSIONS

Mains Supply

Welding equipment should be connected to the mains supply according to the manufacturer's recommendations. If interference occurs, it may be necessary to take additional precautions such as filtering of the mains supply. Consideration should be given to shielding the supply cable of permanently installed welding equipment, in metallic conduit or equivalent. Shielding should be electrically continuous throughout its length. The shielding should be connected to the welding power source so that good electrical contact is maintained between the conduit and the welding power source enclosure.

Maintenance of the Welding Equipment

The welding equipment should be routinely maintained according to the manufacturer's recommendations. All access and service doors and covers should be closed and properly fastened when the welding equipment is in operation. The welding equipment should not be modified in any way except for those changes and adjustments covered in the manufacturers instructions. In particular, the spark gaps of arc striking and stabilizing devices should be adjusted and maintained according to the manufacturer's recommendations.

Welding Cables

The welding cables should be kept as short as possible and should be positioned close together, running at or close to floor level.

Equipotential Bonding

Bonding of all metallic components in the welding installation and adjacent to it should be considered. However, metallic components bonded to the work piece will increase the risk that the operator could receive a shock by touching these metallic components and the electrode at the same time. The operator should be insulated from all such bonded metallic components.

Earthing of the Workpiece

Where the workpiece is not bonded to earth for electrical safety, not connected to earth because of its size and position, e.g., ships hull or building steelwork, a connection bonding the workpiece to earth may reduce emissions in some, but not all instances. Care should be taken to prevent the earthing of the work piece increasing the risk of injury to users, or damage to other electrical equipment. Where necessary, the connection of the workpiece to earth should be made by a direct connection to the work piece, but in some countries where direct connection is not permitted, the bonding should be achieved by suitable capacitance, selected according to national regulations.

Screening and Shielding

Selective screening and shielding of other cables and equipment in the surrounding area may alleviate problems of interference. Screening of the entire welding installation may be considered for special applications.

[1] Portions of the preceding text are contained in EN 60974-10: "Electromagnetic Compatibility (EMC) product standard for arc welding equipment."

GENERAL DESCRIPTION

General Physical Description

The POWER WAVE® STT® MODULE is an accessory enabling compatible power sources to perform the STT® function without limiting the normal multi-process rating of the host machine. It is intended for use with medium range “S”– series Power Wave ® power sources such as the S350. The module itself is a low profile pedestal, designed to seamlessly integrate with compatible power sources and water coolers.

General Functional Description

The POWER WAVE® STT® MODULE is essentially a high speed, high capacity output switch, connected in series with the positive output of the power source. It communicates module status and identification information to the power source via the ArcLink® protocol, and receives a high speed synchronized switching command via a dedicated digital link.

TECHNICAL SPECIFICATIONS -
POWER WAVE® STT® MODULE (North American) (K2902-1)
POWER WAVE® STT® MODULE (CE) (K2921-1)
POWER WAVE® STT® MODULE (CCC) (K2902-2)

STT® Module - Input Voltage and Current		
Voltage	**Input Amperes**	**Notes**
40Vdc	0.5	

STT® Module - *Output Current Capacity		
Duty Cycle	**Amperes**	**Notes**
100% 60% 40%	450 500 550	750A Peak (Max.)

*** Defines capability of the output switch. The actual output current is supplied by host power source.**

PHYSICAL DIMENSIONS			
HEIGHT	**WIDTH**	**DEPTH**	**WEIGHT**
11.5 in. (29.2 cm)	13.9 in. (35.3 cm)	25.4 in. (64.5 cm)	47 lbs. (21.3 kg.)

TEMPERATURE RANGES
OPERATING TEMPERATURE RANGE Environmentally Hardened: -4°F to 104°F (-20C to 40C)
STORAGE TEMPERATURE RANGE Environmentally Hardened: -40°F to 185°F (-40C to 85C)

IP23

SAFETY PRECAUTIONS Read this entire installation section before you start installation.

⚠ WARNING

ELECTRIC SHOCK can kill.

- **Turn off the power source at the disconnect switch before connecting or working inside of the equipment.**
- **Only a qualified electrician should install and connect the STT® Module.**

This equipment is for industrial use only and it is not intended for use in residential locations where the electrical power is provided by the public low-voltage supply system. There can be potential difficulties in residential locations due to conducted as well as radiated radio-frequency disturbances. The EMC or RF classification of this equipment is Class A.

ELECTROMAGNETIC COMPATIBILITY (EMC)

The EMC classification of the POWER WAVE® STT® MODULE (CE) is Industrial, Scientific and Medical (ISM) group 2, class A. The POWER WAVE® STT® MODULE (CE) is for industrial use only. (See print L10093 for further details).

Locate the STT® Module away from radio controlled machinery. The normal operation of the STT® Module may adversely affect the operation of RF controlled equipment, which may result in bodily injury or damage to the equipment.

LOCATION AND MOUNTING

(See Figure A.1)

FIGURE A.1

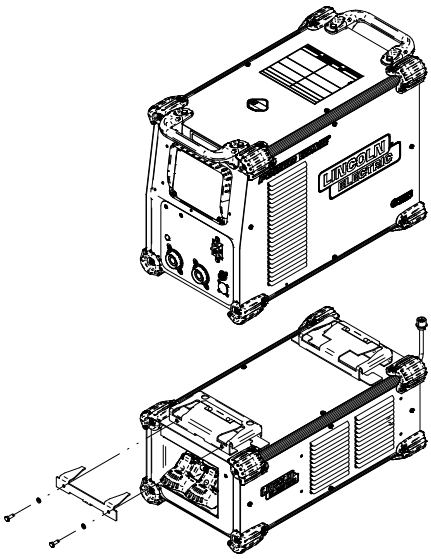

Mount the STT® Module directly to the bottom of a compatible Power Wave "S" series power source utilizing the quick lock mechanism as shown. The STT® Module will operate in harsh environments and can be used outdoors. Even so, it is important that simple preventative measures are followed in order to assure long life and reliable operation.

- The machine must be located where there is free circulation of clean air such that movement into and out of the louvers will not be restricted.
- Dirt and dust that can be drawn into the machine should be kept to a minimum. The use of air filters on the air intake is not recommended because normal air flow may be restricted. Failure to observe these precautions can result in excessive operating temperatures and nuisance shutdown.
- Keep the machine dry. Shelter from rain and snow. Do not place on wet ground or in puddles.
- Do not mount the Power Wave "S" series power source and STT® Module combination over combustible surfaces. Where there is a combustible surface directly under stationary or fixed electrical equipment, that surface shall be covered with a steel plate at least .060" (1.6mm) thick, which shall extend not less than 5.90" (150mm) beyond the equipment on all sides.

TILTING

The machine must be placed on a stable, level surface so it will not topple over.

CONTROL CABLE CONNECTIONS

General Guidelines

Genuine Lincoln control cables should be used at all times (except where noted otherwise). Lincoln cables are specifically designed for the communication and power needs of the Power Wave systems. Most are designed to be connected end to end for ease of extension. Generally, it is recommended that the total length not exceed 100 feet (30.5 m). The use of non-standard cables, especially in lengths greater than 25 feet, can lead to communication problems (system shutdowns), poor motor acceleration (poor arc starting), and low wire driving force (wire feeding problems). Always use the shortest length of control cable possible, and DO NOT coil excess cable.

⚠ CAUTION

Regarding cable placement, best results will be obtained when control cables are routed separate from the weld cables. This minimizes the possibility of interference between the high currents flowing through the weld cables, and the low level signals in the control cables. These recommendations apply to all communication cables including ArcLink® connections.

CONNECTION BETWEEN POWER SOURCE AND STT® MODULE (ARCLINK® AND DIFFERENTIAL I/O PIGTAILS)

The pigtail connections on the STT® Module include all signal and power lines required for proper operation. With the STT® Module securely fastened to the power source, connect the pigtails to their respective receptacles on the back of the power source per the connection diagrams located in the **"Installation Section"**.

Special Instructions:
K2902-1
Some earlier vintage S350 power sources (Code 11589) may not include a 6-pin Differential I/O receptacle. If the receptacle is not present on the host power source, contact the Lincoln Electric Service Department to obtain an S350/STT Retrofit Kit (S28481).
K2921-1
A special ArcLink® and Differential I/O receptacle kit is provided with the STT® Module for installation into the host power source. Follow the instructions provided with the kit. (reference instruction sheet M22499).

STT® Module to ArcLink® Wire Feeders (K1543 or K2683 ArcLink® Control Cable)
The K2902-1 STT® Module includes an ArcLink® output receptacle for connection to compatible wire feeders. The control cable consists of two power leads, one twisted pair for digital communication, and one lead for voltage sensing. The 5 pin ArcLink® receptacle is located on the lower rear portion of the STT® Module. The control cable is keyed and polarized to prevent improper connection. Best results will be obtained when control cables are routed separate from the weld cables, especially in long distance applications. The recommended combined length of the ArcLink® control cable network should not exceed 200ft.

ELECTRODE AND WORK CONNECTIONS

Connect the electrode and work cables per the connection diagrams included in this document. Size and route the cables per the following:

- **Positive Electrode Polarity:** Most welding applications run with the electrode being positive (+). For those applications, connect the electrode cable between the wire drive feed plate and the output stud on the STT® Module. Connect a work lead from the negative (-) power source output stud to the work piece per the Connection Diagram. **(See Figure A.5)**
- **Negative Electrode Polarity:** The STT® process CANNOT be run using negative electrode polarity. However, for processes other than STT® requiring negative polarity, such as some Innershield applications, the electrode and work connections should be reversed at the load, NOT at the input to the STT® Module. Connect the electrode cable to the negative (-) stud of the power source, and work cable to the output stud of the STT® Module per the Negative Polarity Connection Diagram. **(See Figure A.2)**

⚠ WARNING

Never reverse the polarity to the input of the STT® Module (DO NOT connect the negative stud of the power source to input stud of the STT® Module). This may result in damage to the STT® Module!

FIGURE A.2

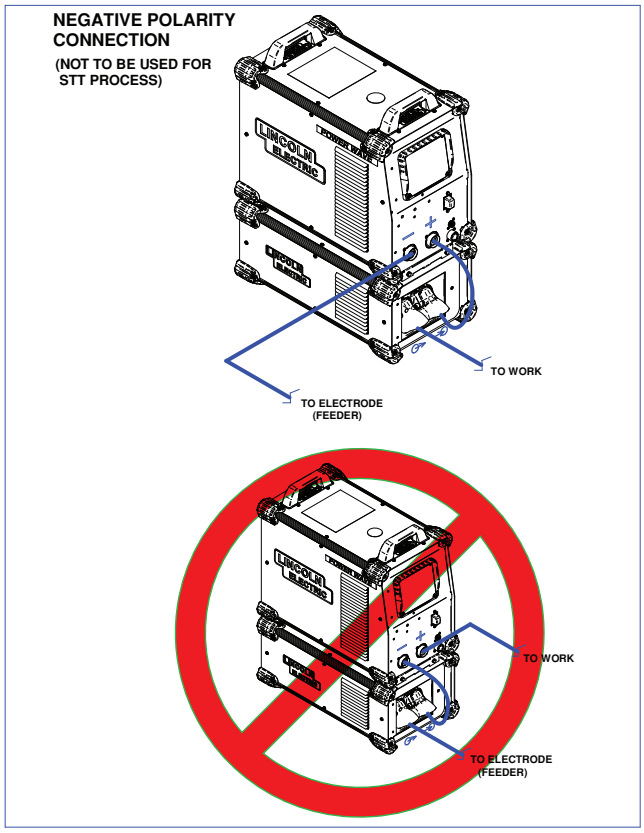

⚠ CAUTION

Negative electrode polarity operation may require reconfiguration of the power source voltage sense leads. See the Remote Sense Lead section in the power source instruction manual for further details.

For additional Safety information regarding the electrode and work cable set-up, See the standard **"SAFETY INFORMATION"** located in the front of the Instruction Manuals.

TABLE A.1

OUTPUT CABLE GUIDELINES

Amperes	Percent Duty Cycle	CABLE SIZES FOR COMBINED LENGTHS OF ELECTRODE AND WORK CABLES (RUBBER COVERED COPPER - RATED 75°C)**				
		0 to 50 Ft.	50 to 100 Ft.	100 to 150 Ft.	150 to 200 Ft.	200 to 250 Ft.
200	60	2	2	2	1	1/0
200	100	2	2	2	1	1/0
225	20	4 or 5	3	2	1	1/0
225	40 & 30	3	3	2	1	1/0
250	30	3	3	2	1	1/0
250	40	2	2	1	1	1/0
250	60	1	1	1	1	1/0
250	100	1	1	1	1	1/0
300	60	1	1	1	1/0	2/0
325	100	2/0	2/0	2/0	2/0	3/0
350	60	1/0	1/0	2/0	2/0	3/0
400	60	2/0	2/0	2/0	3/0	4/0
400	100	3/0	3/0	3/0	3/0	4/0
500	60	2/0	2/0	3/0	3/0	4/0

** Tabled values are for operation at ambient temperatures of 40°C and below. Applications above 40°C may require cables larger than recommended, or cables rated higher than 75°C.

GENERAL GUIDELINES

- Select the appropriate size cables per the **"Output Cable Guidelines"** (See Table A.1. Excessive voltage drops caused by undersized welding cables and poor connections often result in unsatisfactory welding performance. Always use the largest welding cables (electrode and work) that are practical, and be sure all connections are clean and tight.

Note: Excessive heat in the weld circuit indicates undersized cables and/or bad connections.

- Route all cables directly to the work and wire feeder, avoid excessive lengths and do not coil excess cable. Route the electrode and work cables in close proximity to one another to minimize the loop area and therefore the inductance of the weld circuit.

- Always weld in a direction away from the work (ground) connection.

See Table A.1 for copper cable sizes recommended for different currents and duty cycles. Lengths stipulated are the distance from the welder to work and back to the welder again. Cable sizes are increased for greater lengths primarily for the purpose of minimizing cable drop.

CABLE INDUCTANCE AND ITS EFFECTS ON WELDING

Excessive cable inductance will cause the welding performance to degrade. There are several factors that contribute to the overall inductance of the cabling system including cable size, and loop area. The loop area is defined by the separation distance between the electrode and work cables, and the overall welding loop length. The welding loop length is defined as the total of length of the electrode cable (A) + work cable (B) + work path (C) (see Figure A.3 below). To minimize inductance always use the appropriate size cables, and whenever possible, run the electrode and work cables in close proximity to one another to minimize the loop area. Since the most significant factor in cable inductance is the welding loop length, avoid excessive lengths and do not coil excess cable. For long work piece lengths, a sliding ground should be considered to keep the total welding loop length as short as possible.

FIGURE A.3

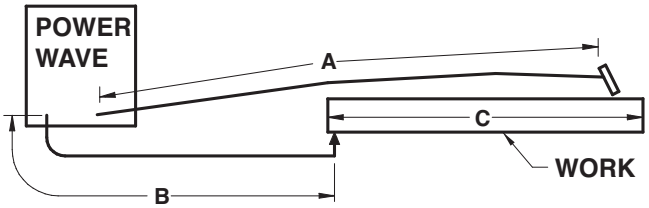

REMOTE SENSE LEAD CONNECTIONS

Voltage Sensing Overview

The STT® welding process requires the use of remote voltage sense leads to more accurately monitor the conditions of the arc. These leads originate in the power source, and are connected and configured external to the STT® Module. Consult the power source instruction manual for detailed information.

Note:
Other processes run through the STT® Module do not necessarily require sense leads, but will benefit from their use. Consult the power source instruction manual for recommendations.

General Voltage Sensing Considerations for Multiple Arc Systems

Special care must be taken when more than one arc is welding simultaneously on a single part. The placement and configuration of remote work voltage sense leads is critical to the proper operation of multiple arc STT® applications.

RECOMMENDATIONS:

- **Position the sense leads out of the path of the weld current.** Especially any current paths common to adjacent arcs. Current from adjacent arcs can induce voltage into each others current paths that can be misinterpreted by the power sources, and result in arc interference.

- **For longitudinal applications,** connect all work leads at one end of the weldment, and all of the work voltage sense leads at the opposite end of the weldment. Perform welding in the direction away from the work leads and toward the sense leads. **(See Figure A.4)**

FIGURE A.4

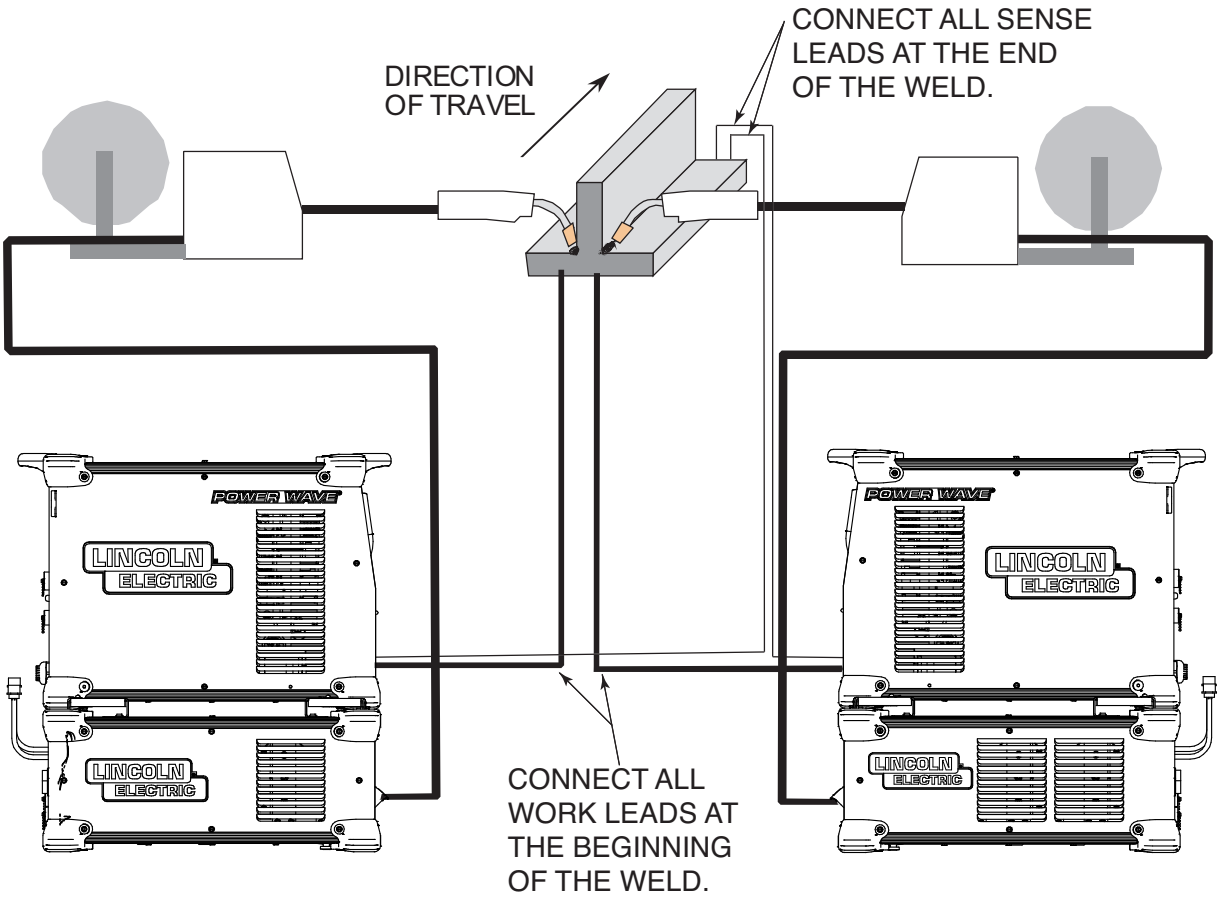

- **For circumferential applications,** connect all work leads on one side of the weld joint, and all of the work voltage sense leads on the opposite side, such that they are out of the current path.

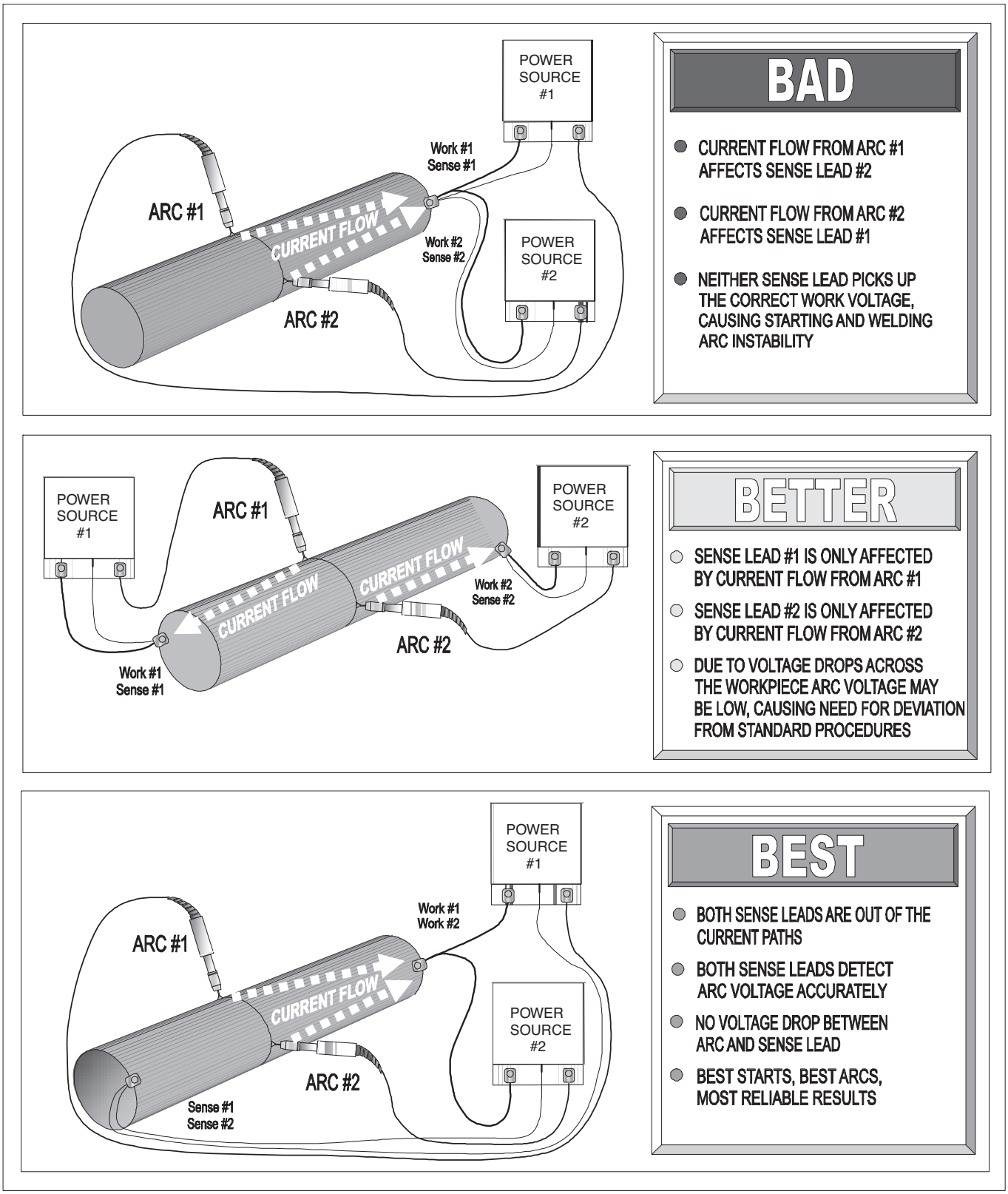

CONNECTION DIAGRAM SYSTEM

STT® MODULE CONNECTION DIAGRAM

FIGURE A.5

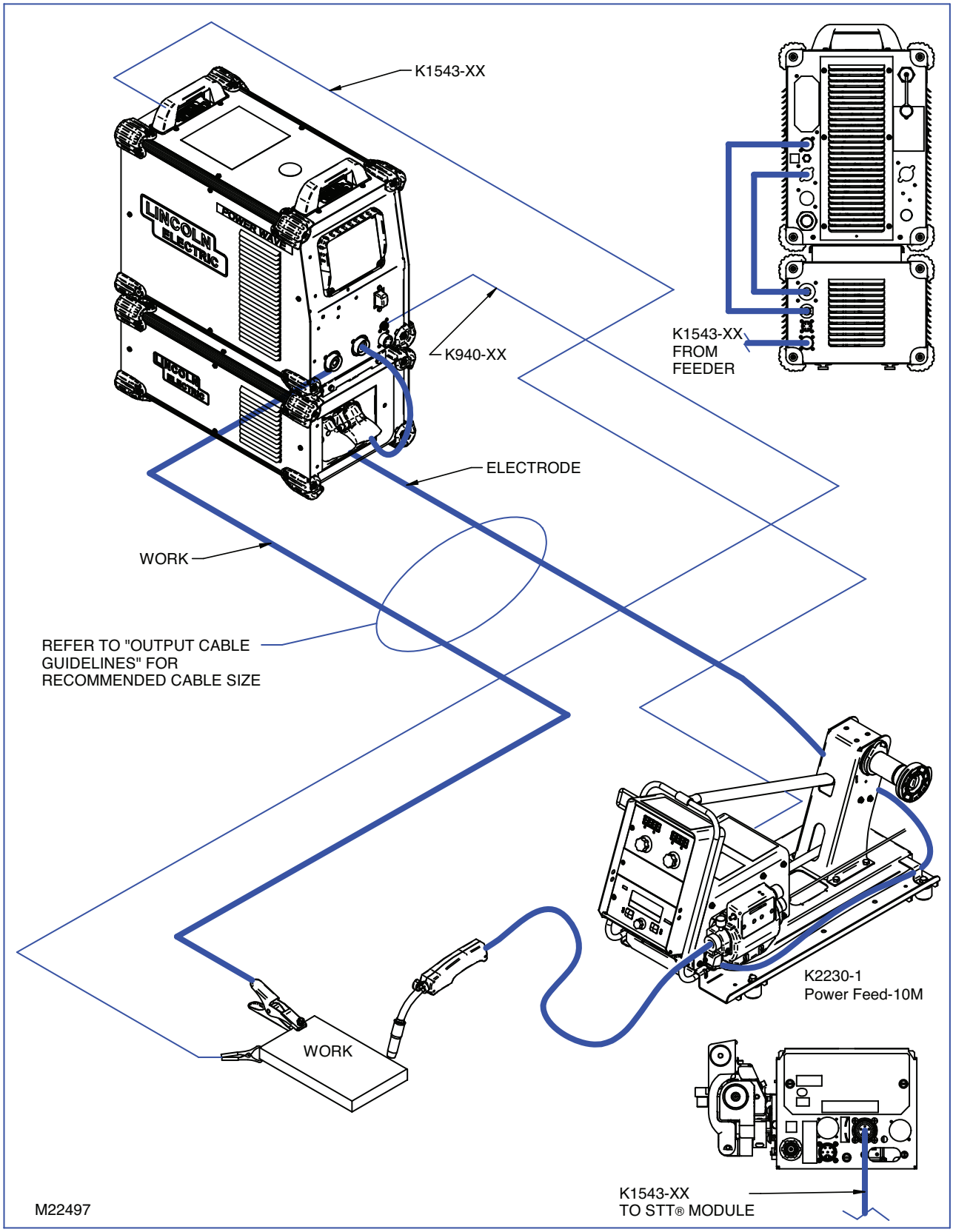

CONNECTION DIAGRAM SYSTEM

STT MODULE (CE) CONNECTION DIAGRAM
Figure A.5

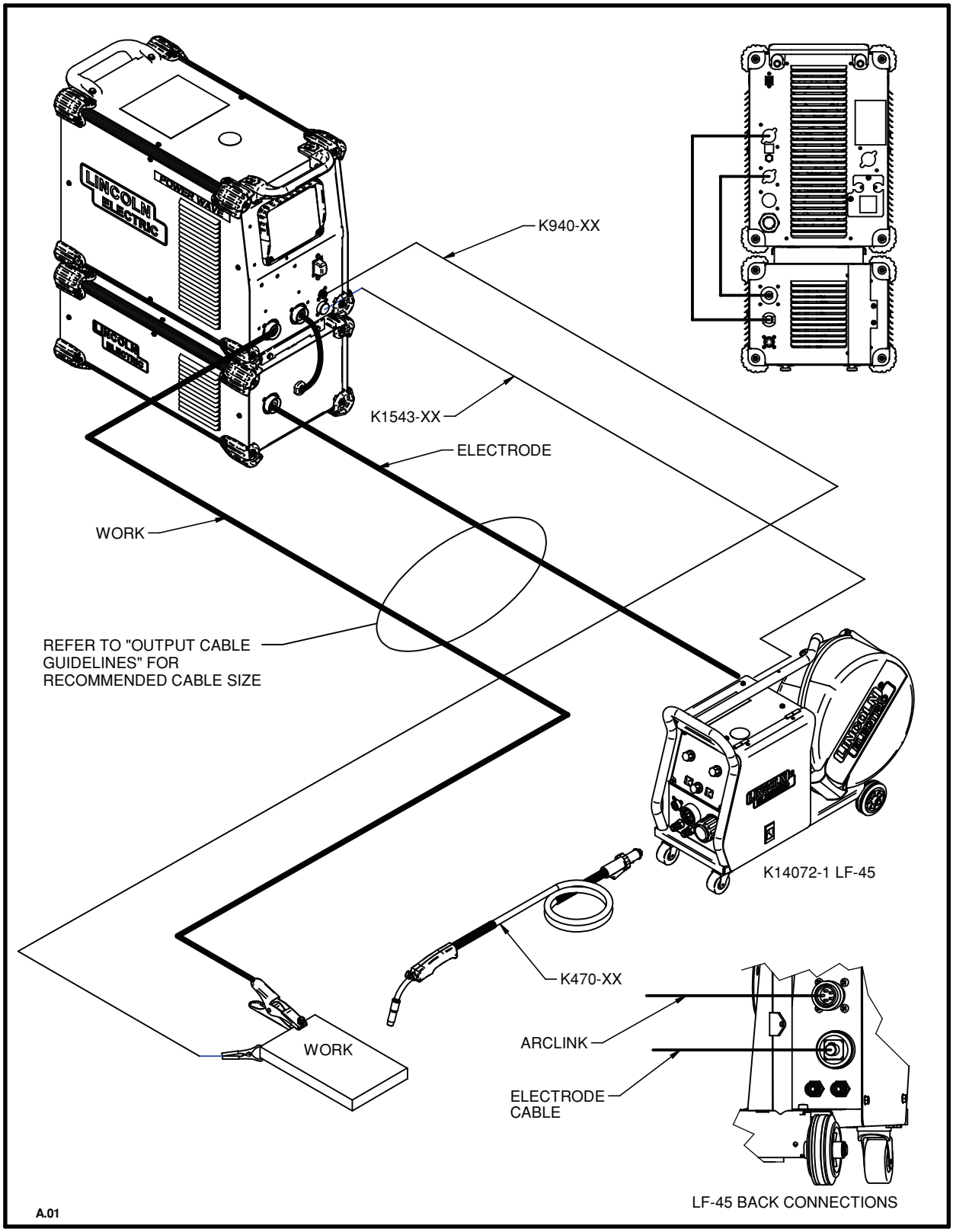

M22498

SAFETY PRECAUTIONS

Read this entire section of operating instructions before operating the machine.

⚠ WARNING

ELECTRIC SHOCK can kill.
- **Disconnect input power before servicing.**
- **Do not operate with covers removed.**
- **Do not touch electrically live parts.**
- **Only qualified persons should install, use or service this equipment.**

POWER-UP SEQUENCE

The POWER WAVE® STT® MODULE will be powered up at the same time as the power source. The status light will blink green for about a minute while the system is configuring. After this time, the status lights will turn a steady green indicating the machine is ready.

The fan in the POWER WAVE® STT® MODULE will run only when the power source fan is activated.

DUTY CYCLE

The POWER WAVE® STT® MODULE is rated at 450 amps at a 100% duty cycle. It is further rated to support 500 amps at a 60% duty cycle and 550 amps at a 40% duty cycle. The duty cycle is based on a ten-minute period. A 60% duty cycle represents 6 minutes of welding and 4 minutes of idling in a ten-minute period.

Note:
The POWER WAVE® STT® MODULE is capable of withstanding a peak output current of 750 amps. The allowable maximum average output current is time dependant, and ultimately limited by the host power source.

COMMON WELDING PROCEDURES

MAKING A WELD

Choose the electrode material, electrode size, shielding gas, and process (GMAW, GMAW-P, GMAW STT etc.) appropriate for the material to be welded.

Select the weld mode that best matches the desired welding process. The standard weld set shipped with the host power source encompasses a wide range of common processes that will meet most needs. If the STT modes are not available, or if a special weld mode is desired, visit www.powerwavesoftware.com or contact the local Lincoln Electric sales representative.

To make a weld, the power source needs to know the desired welding parameters. Set the parameters on the user interface typically located on the wire feeder. The user interface sends the parameters (arc voltage, wire feed speed, UltimArc™ value, etc.), to the power source via the ArcLink® communication protocol through the control cables. The power source controls the POWER WAVE® STT® MODULE based on the selected weld mode.

For a more detailed description, and specific operating instructions, consult the power source Instruction Manual.

RECOMMENDED PROCESSES AND EQUIPMENT

RECOMMENDED PROCESSES

The POWER WAVE® STT® MODULE is recommended for all process supported by the host power source including, but not limited to SMAW, GMAW, GMAW-P, GMAW-STT.

PROCESS LIMITATIONS

The POWER WAVE® STT® MODULE is unaffected by the voltage at the load, and therefore processes are only limited by the current and duty cycle ratings listed in the specifications for the product. The POWER WAVE® STT® MODULE is designed to protect itself from the excessive transient voltages associated with highly inductive weld circuits. These high inductance circuits may result in unsatisfactory performance, but will not damage the module.

Although the STT Module can be configured to support negative electrode polarity processes, such as Innershield, the STT process must be configured to use positive electrode polarity.

EQUIPMENT LIMITATIONS

The POWER WAVE® STT® MODULE is intended for use with compatible medium range “S” – series POWER WAVE® power sources such as the S350.

COMMON EQUIPMENT PACKAGES

BASIC PACKAGE	
K2902-1	STT® Module (North American)
K2823-1	Power Wave® S350
K2370-2	POWER FEED-10M
K1543-xx	ArcLink® Cable (5 pin) – connects wire feeder to power source.
OPTIONAL WIRE FEEDERS	
K2536	POWER FEED-25M

BASIC PACKAGE (CE)	
K2921-1	STT® Module (CE)
K2823-2	Power Wave® S350 (CE)
K14072-1	LF-45
K1543-xx	ArcLink® Cable (5 pin) – connects wire feeder to power source.
OPTIONAL WIRE FEEDERS	
K2536	PF-25M

BASIC PACKAGE	
K2902-2	STT® Module (CCC)
K3042-2	Power Wave® S350
K2370-2	POWER FEED-10M
K1543-xx	ArcLink® Cable (5 pin) – connects wire feeder to power source.
OPTIONAL WIRE FEEDERS	
K2536	POWER FEED-25M

STT® MODULE (North American) CASE FRONT

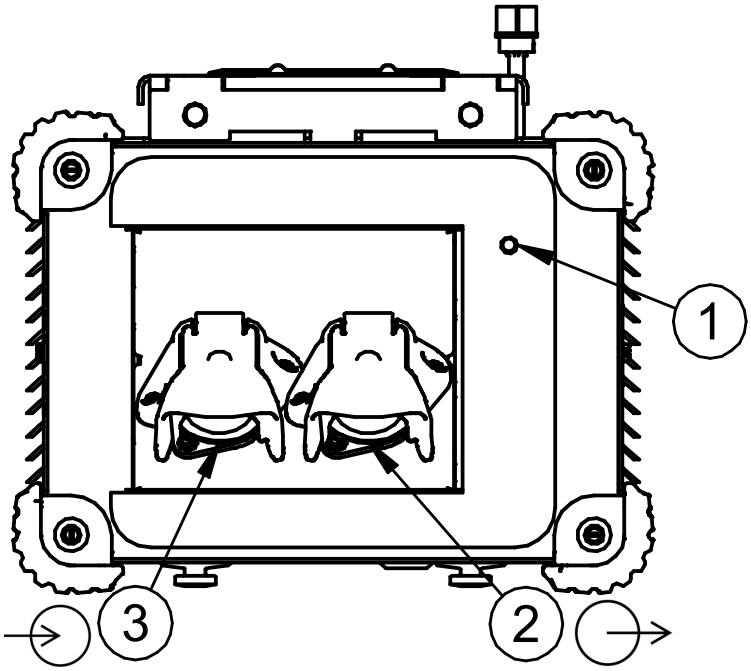

CASE FRONT DESCRIPTIONS

1. Status LED – Provides ArcLink® status of Power Wave STT® Module.

Note: During normal power-up, the LED will flash green up to 60 seconds as the equipment performs self tests.

LED condition	Definition
Steady green.	System okay. The power source and wire feeder are communicating normally.
Blinking green.	Occurs during a reset and indicates the power source is identifying each component in the system. This is normal for the first 60 seconds after power-up, or if the system configuration is changed during operation.
Alternating green and red.	Non-recoverable system fault. If the power source or wire feeder status LED is flashing any combination of red and green, errors are present in the system. Read the error code before the machine is turned off.

2. STT INPUT – Connects directly to the Positive output of the power source.

3. STT OUTPUT – Connects directly to the wire feeder, torch or electrode.

STT® MODULE (CE) CASE FRONT

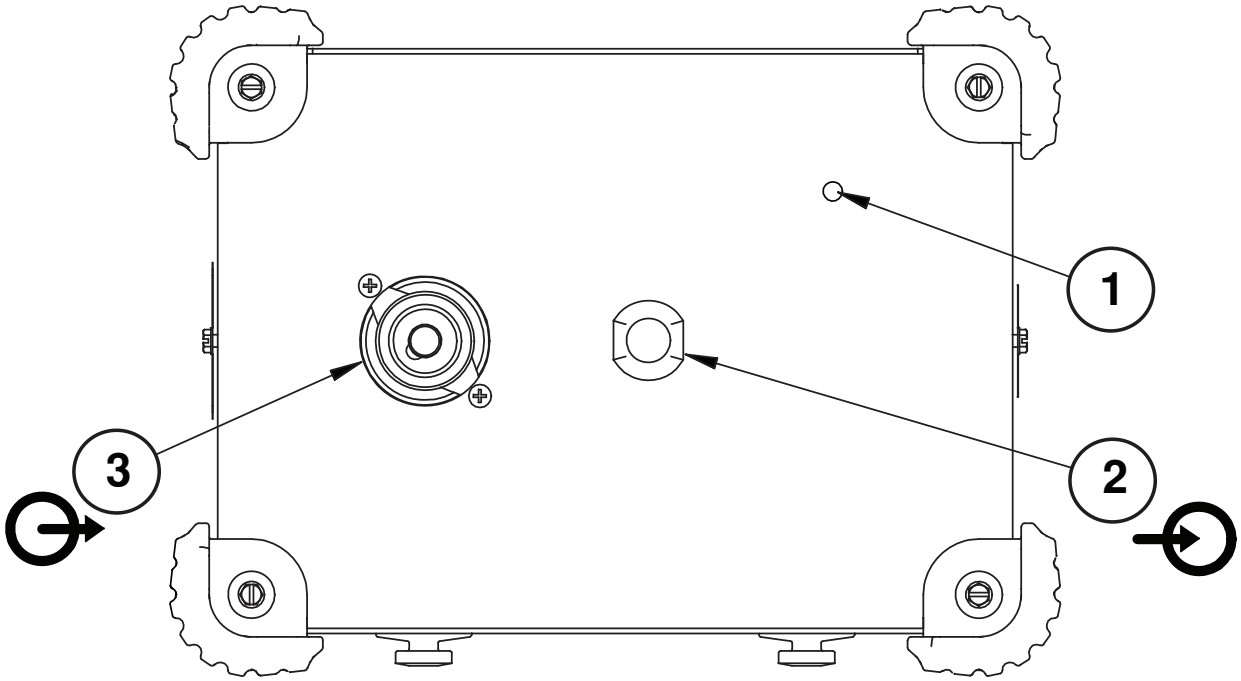

CASE FRONT DESCRIPTIONS

1. Status LED – Provides ArcLink® status of Power Wave STT Module.

Note: During normal power-up, the LED will flash green up to 60 seconds as the equipment performs self tests.

LED condition	Definition
Steady green.	System okay. The power source and wire feeder are communicating normally.
Blinking green.	Occurs during a reset and indicates the power source is identifying each component in the system. This is normal for the first 60 seconds after power-up, or if the system configuration is changed during operation.
Alternating green and red.	Non-recoverable system fault. If the power source or wire feeder status LED is flashing any combination of red and green, errors are present in the system. Read the error code before the machine is turned off.

2. STT INPUT – Connects directly to the Positive output of the power source.

3. STT OUTPUT – Connects directly to the wire feeder, torch or electrode.

STT® MODULE (CCC) CASE FRONT

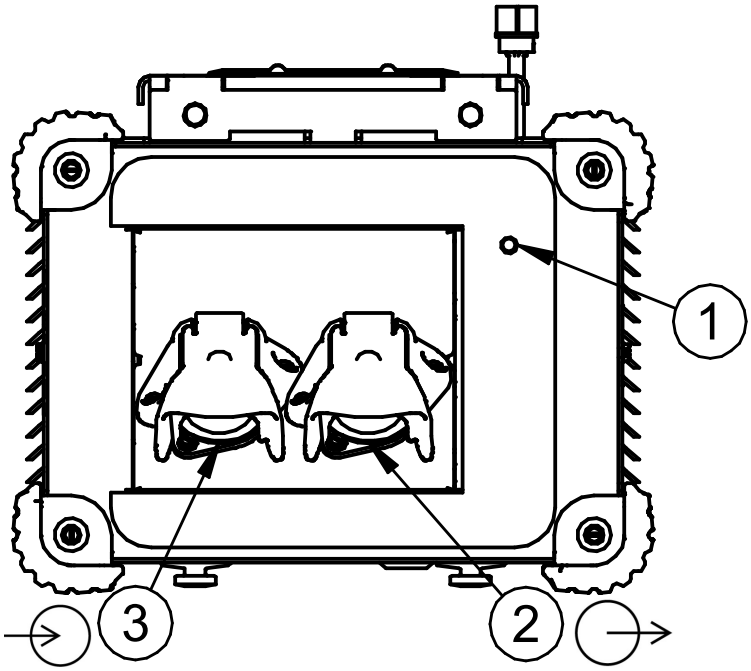

CASE FRONT DESCRIPTIONS

1. Status LED – Provides ArcLink® status of Power Wave STT® Module.

Note: During normal power-up, the LED will flash green up to 60 seconds as the equipment performs self tests.

LED condition	Definition
Steady green.	System okay. The power source and wire feeder are communicating normally.
Blinking green.	Occurs during a reset and indicates the power source is identifying each component in the system. This is normal for the first 60 seconds after power-up, or if the system configuration is changed during operation.
Alternating green and red.	Non-recoverable system fault. If the power source or wire feeder status LED is flashing any combination of red and green, errors are present in the system. Read the error code before the machine is turned off.

2. STT INPUT – Connects directly to the Positive output of the power source.

3. STT OUTPUT – Connects directly to the wire feeder, torch or electrode.

STT® MODULE (North American) CASE BACK

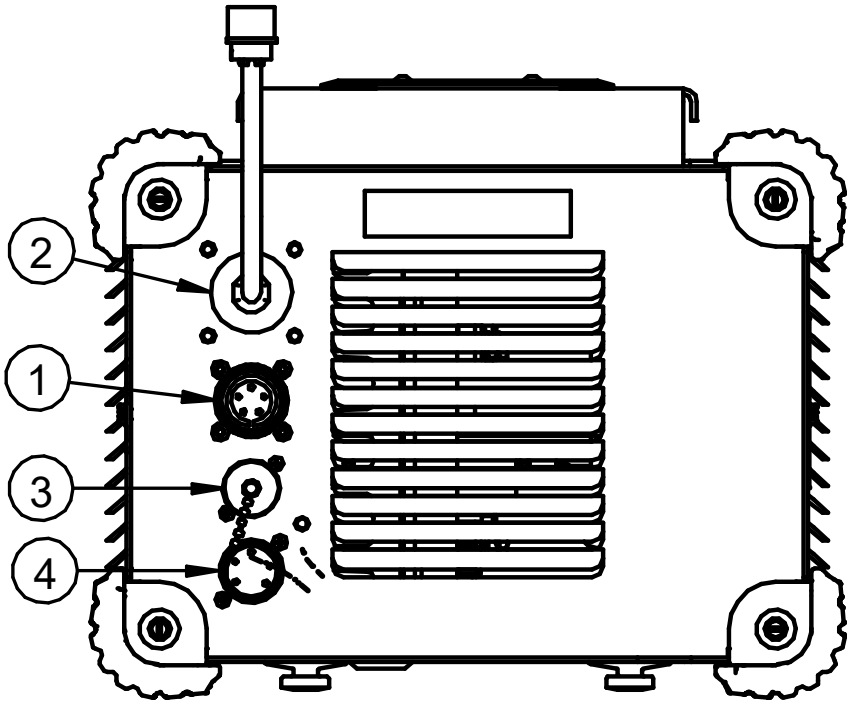

CASE BACK DESCRIPTIONS

1. ArcLink® (In) – Connects directly to the ArcLink® Out receptacle on the rear of the power source.

2. Differential I/O Pigtail – Connects directly to the Differential I/O output receptacle on the rear of the power source.

3. Differential I/O (Sync Tandem) Output – Supports Synchronized Tandem MIG Welding with other compatible power sources. Note: This feature is not compatible with the STT® process, and is therefore disabled when using STT® weld modes.

4. ArcLink® (Out) – Available on the standard model only. Provides an ArcLink® pass through connection for all compatible ArcLink® wire feeders.

STT® MODULE (CE) CASE BACK

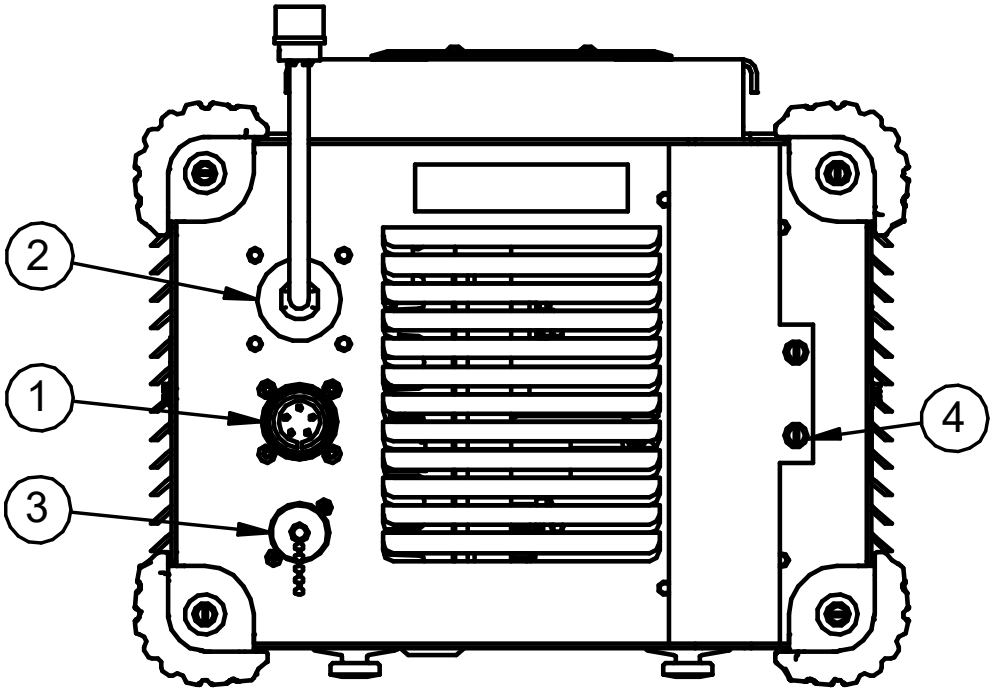

CASE BACK DESCRIPTIONS

1. ArcLink® (In) – Connects directly to the ArcLink® Out receptacle on the rear of the power source.

2. Differential I/O Pigtail – Connects directly to the Differential I/O output receptacle on the rear of the power source.

3. Differential I/O (Sync Tandem) Output – Supports Synchronized Tandem MIG Welding with other compatible power sources. Note: This feature is not compatible with the STT® process, and is therefore disabled when using STT® weld modes.

4. Watercooler Pass Through – CE model only. Provides a channel to conceal and protect the power and control leads for the optional integrally mounted CE watercooler.

STT® MODULE (CCC) CASE BACK

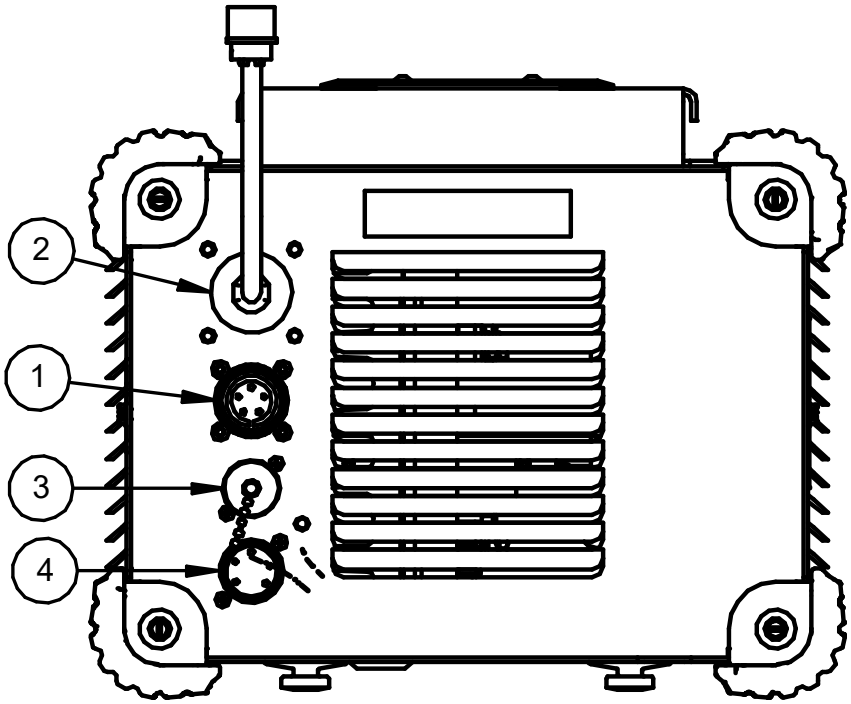

CASE BACK DESCRIPTIONS

1. ArcLink® (In) – Connects directly to the ArcLink® Out receptacle on the rear of the power source.

2. Differential I/O Pigtail – Connects directly to the Differential I/O output receptacle on the rear of the power source.

3. Differential I/O (Sync Tandem) Output – Supports Synchronized Tandem MIG Welding with other compatible power sources. Note: This feature is not compatible with the STT® process, and is therefore disabled when using STT® weld modes.

4. ArcLink® (Out) – Available on the standard model only. Provides an ArcLink® pass through connection for all compatible ArcLink® wire feeders.

SAFETY PRECAUTIONS

⚠ WARNING

ELECTRIC SHOCK can kill.
- **Disconnect input power before servicing.**
- **Do not operate with covers removed.**
- **Do not touch electrically live parts.**
- **Only qualified persons should install, use or service this equipment.**

See additional warning information throughout this operator's manual and the Engine manual as well.

ROUTINE MAINTENANCE

Routine maintenance consists of periodically blowing out the machine, using a low-pressure air stream, to remove accumulated dust and dirt from the intake and outlet louvers, and the cooling channels in the machine. Also verify the STT® Module fan is operational when the power source fan is activated.

CALIBRATION SPECIFICATION

Due to the nature of its operation, calibration of the STT® Module is not required. From a system perspective, the output calibration of the power source and wire feeder should be performed as directed in their respective instruction manuals.

When calibrating the power source voltage using the **Weld Manager** utility, the actual output voltage should be monitored directly at the output of the power source (not the STT® Module output). This is necessary because the default calibration mode senses voltage directly from the power source output studs. The STT® Module has no effect on the output current calibration.

HOW TO USE TROUBLESHOOTING GUIDE

⚠ WARNING

Service and Repair should only be performed by Lincoln Electric Factory Trained Personnel. Unauthorized repairs performed on this equipment may result in danger to the technician and machine operator and will invalidate your factory warranty. For your safety and to avoid Electrical Shock, please observe all safety notes and precautions detailed throughout this manual.

This Troubleshooting Guide is provided to help you locate and repair possible machine malfunctions. Simply follow the three-step procedure listed below.

Step 1. LOCATE PROBLEM (SYMPTOM).
Look under the column labeled "PROBLEM (SYMPTOMS)". This column describes possible symptoms that the machine may exhibit. Find the listing that best describes the symptom that the machine is exhibiting.

Step 2. POSSIBLE CAUSE.
The second column labeled "POSSIBLE CAUSE" lists the obvious external possibilities that may contribute to the machine symptom.

Step 3. RECOMMENDED COURSE OF ACTION
This column provides a course of action for the Possible Cause, generally it states to contact your local Lincoln Authorized Field Service Facility.

If you do not understand or are unable to perform the Recommended Course of Action safely, contact your local Lincoln Authorized Field Service Facility.

⚠ CAUTION

If for any reason you do not understand the test procedures or are unable to perform the tests/repairs safely, contact your **Local Lincoln Authorized Field Service Facility** for technical troubleshooting assistance before you proceed.

Observe all Safety Guidelines detailed throughout this manual

USING THE STATUS LED TO TROUBLESHOOT SYSTEM PROBLEMS

The STT® Module is equipped with a Status Light. If a problem occurs it is important to note the condition of the status lights. **Therefore, prior to cycling power to the system, check the power source status light for error sequences in Table E.1.**

TABLE E.1

Light Condition	Meaning
Steady Green	System OK. Power source is operational, and is communicating normally with all healthy peripheral equipment connected to its ArcLink® network.
Blinking Green	Occurs during power up or a system reset, and indicates the power source is mapping (identifying) each component in the system. Normal for first 1-30 seconds after power is turned on, or if the system configuration is changed during operation.
Fast Blinking Green	Under normal conditions indicates Auto-mapping has failed. Also used by the diagnostic utility (included in the Weld Manager® Utilities available at **www.powerwavesoftware.com**) to identify the selected machine when connecting to a specific IP address.
Alternating Green and Red	Non-recoverable system fault. If the Status lights are flashing any combination of red and green, errors are present. **Read the error code(s) before the machine is turned off.** Error Code interpretation through the Status light is detailed in the Service Manual. Individual code digits are flashed in red with a long pause between digits. If more than one code is present, the codes will be separated by a green light. Only active error conditions will be accessible through the Status Light. Error codes can also be retrieved with the diagnostics utility (included in the Weld Manager® Utilities available at **www.powerwavesoftware.com**). This is the preferred method, since it can access historical information contained in the error log. To clear the active error(s), turn power source off, and back on to reset.
Steady Red	Not applicable.
Blinking Red	Not applicable.

⚠ CAUTION

If for any reason you do not understand the test procedures or are unable to perform the tests/repairs safely, contact your **Local Lincoln Authorized Field Service Facility** for technical troubleshooting assistance before you proceed.

Observe all Safety Guidelines detailed throughout this manual

ERROR CODES FOR THE STT® MODULE

The following is a partial list of possible error codes for the STT® MODULE.

STT® MODULE		
Error Code #		**Indication**
36	Thermal error	Indicates over temperature. Usually accompanied by Thermal LED. Check fan operation. Be sure process does not exceed duty cycle limit of the machine.
39	Misc. hardware fault	Unknown glitch has occurred on the fault interrupt circuitry. Sometimes caused by primary over current fault, or intermittent connections in the thermostat circuit.
99	STT Status error	Error reported by the STT® Switch PC Board. Generally caused by misconnection of welding leads (reverse polarity). May also be caused by loss of input voltage or board failure. Observe diagnostic LED's on the STT® Switch PC Board to determine the exact cause.
Other		A complete list of error codes is available in the Power Wave Manager Utility (available at **www.powerwavesoftware.com**). Error codes that contain three or four digits are defined as fatal errors. These codes generally indicate internal errors on the STT® Module Status PC Board. If cycling the input power on the machine does not clear the error, contact the Service Department.

⚠ CAUTION

If for any reason you do not understand the test procedures or are unable to perform the tests/repairs safely, contact your **Local Lincoln Authorized Field Service Facility** for technical troubleshooting assistance before you proceed.

Observe all Safety Guidelines detailed throughout this manual

ON BOARD LED'S FOR THE STT® SWITCH PC BOARD

STT® SWITCH PC BOARD				
MACHINE OUTPUT	LED1 (GATE)	LED2 (STATUS)	LED3 (+15V)	INDICATION
ON/OFF	ON	ON	ON	Normal Condition – STT® Switch is ON.
ON	OFF	ON	ON	Normal Condition – STT® Switch has been commanded OFF. **Note:** During normal STT® operation the OFF state of the LED may only be detectable as a slight dimming.
ON	OFF	OFF	ON	Status Failure (only when triggered). Should be accompanied by Error 99 on the external STT® Module Status LED. Most likely caused by weld cable misconnection (reverse polarity).
ON/OFF	OFF	OFF	ON/OFF	Status Failure (constantly). Should be accompanied by Error 99 on the external STT® Module Status LED. Most likely caused by the on board power supply under-voltage lockout. Verify input voltage to the STT® Switch board.

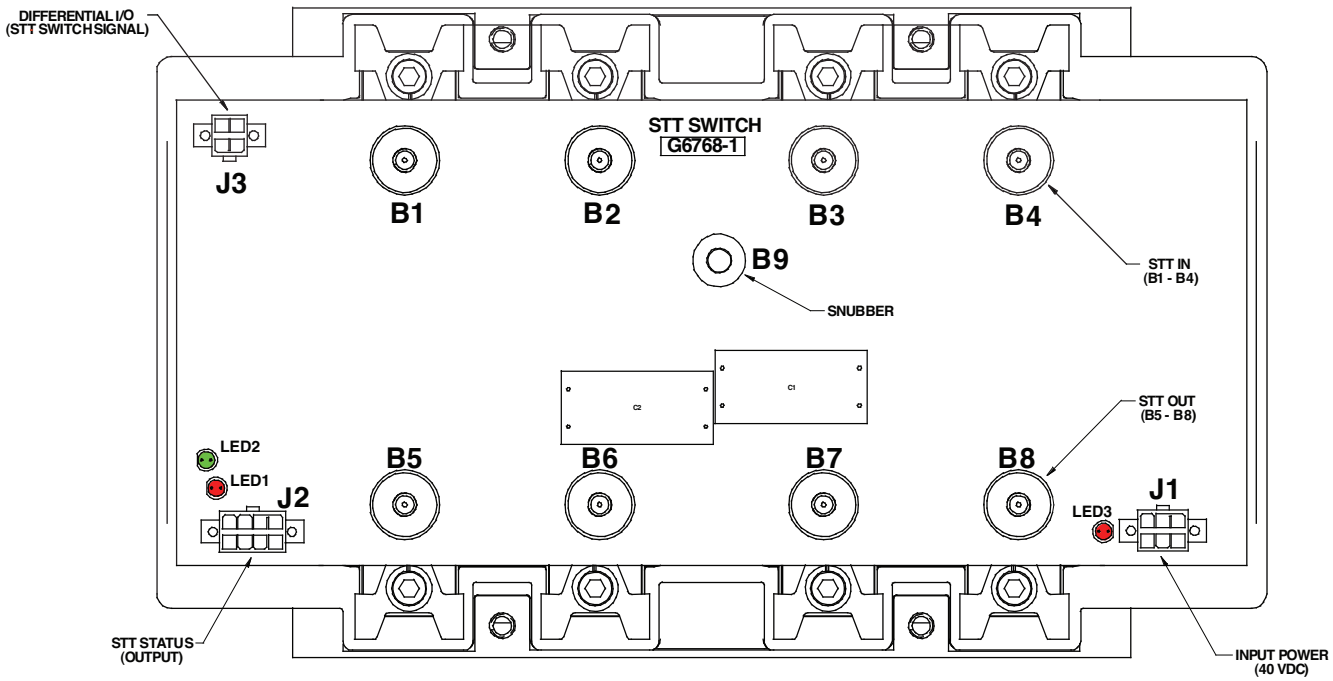

⚠ CAUTION

If for any reason you do not understand the test procedures or are unable to perform the tests/repairs safely, contact your **Local Lincoln Authorized Field Service Facility** for technical troubleshooting assistance before you proceed.

Observe all Safety Guidelines detailed throughout this manual

PROBLEMS (SYMPTOMS)	POSSIBLE CAUSE	RECOMMENDED COURSE OF ACTION
BASIC MACHINE PROBLEMS		
Input fuses keep blowing	1. Improperly sized input fuses.	1. Make sure fuses are properly sized. See installation section of this manual for recommended sizes.
	2. Improper Weld Procedure requiring output levels in excess of machine rating.	2. Reduce output current, duty cycle, or both.
	3. Major physical or electrical damage is evident in the power source when the sheet metal covers are removed.	3. Contact your local authorized **Lincoln Electric Field Service** facility for technical assistance.
Machine will not power up (no lights on power source, STT® Module or Wire Feeder).	1. No Input Power.	1. Make sure input supply disconnect has been turned ON. Check input fuses. Make certain that the Power Switch on the power source is in the "ON" position.
No Status Light on STT® Module	1. 40VDC input not present at STT® Module.	1 Check ArcLink® cable. Verify 40VDC per wiring diagram. • If wire feeder is functional and connected through the STT® Module, suspect connection issue in STT® Module. Verify condition of LED's on STT® Switch PCB (viewable through rear and left side louvers.
	2. Malfunctioning Status LED.	2. Verify status LED is properly installed and has not disengaged from the lens.
Machine won't weld, when attached to STT® Module.	1. STT® Status Error.	1. Make certain the polarity of the STT® Module is correct per the connection diagram (Positive to STT Input). • If polarity is correct, verify condition of LED's on STT® Switch PCB (viewable through rear and left side louvers.
	2. STT® Thermal Error.	2. See "Thermal error indiction..." section.
	3. 40VDC input not present at STT® Module.	3. See "No Status Light on STT®…" section.
	4. Internal open circuit	4. Check for loose or broken connection in STT® Module weld circuit.

⚠ CAUTION

If for any reason you do not understand the test procedures or are unable to perform the tests/repairs safely, contact your **Local Lincoln Authorized Field Service Facility** for technical troubleshooting assistance before you proceed.

Observe all Safety Guidelines detailed throughout this manual

PROBLEMS (SYMPTOMS)	POSSIBLE CAUSE	RECOMMENDED COURSE OF ACTION
BASIC MACHINE PROBLEMS		
Thermal error indication on STT® Module (error 36).	1. Improper fan operation.	1. Check for proper fan operation. (Fans typically run whenever output power is on.) Check for material blocking intake or exhaust louvers, or for excessive dirt clogging cooling channels in machine.
	2. STT® Switch PC board thermostat.	2. After machine has cooled, reduce load, duty cycle, or both. Check for material blocking intake or exhaust louvers and heat sink fins.
	3. Open thermostat circuit.	3. Check for broken wires, open connections or faulty thermostat in the STT® Module.
WELD AND ARC QUALITY PROBLEMS		
General degradation of weld performance.	1. Wire feed problem.	1. Check for feeding problems. Check actual WFS vs. preset. Verify proper wire drive and gear ratio has been selected.
	2. Cabling problems.	2. Check for bad connections, excessive loops in cable, etc. **NOTE:** The presence of heat in the external welding circuit indicates poor connections or undersized cables.
	3. Loss of, or improper Shielding Gas.	3. Verify gas flow and type are correct.
	4. Verify weld mode is correct for process.	4. Select the correct weld mode for the application.
	5. Machine calibration.	5. Verify the calibration of the power source output current and voltage.
	6. STT® Process **ONLY**: Excessive cable inductance or STT® snubber malfunction.	6. Excessive cable inductance or STT® snubber malfunction can cause the transient voltage to exceed the safe operating threshold on the STT® Switch PC board. Under these conditions the STT® switch turns ON to protect itself. Follow recommended cable guidelines to minimize the inductance, and inspect the snubber resistor circuit for damage.

⚠ CAUTION

If for any reason you do not understand the test procedures or are unable to perform the tests/repairs safely, contact your **Local Lincoln Authorized Field Service Facility** for technical troubleshooting assistance before you proceed.

Observe all Safety Guidelines detailed throughout this manual

STT® MODULE FUNCTIONAL TEST

PREPARATION

- Connect the STT® module to a Power Wave S350 or other compatible machine.
  (This test assumes the host power source has been calibrated.)
- Verify the latest software is loaded in the Power Wave.
- Short the Work (-) to the Electrode (STT® Output).
  (Total Cable Length ≤ 10ft.)

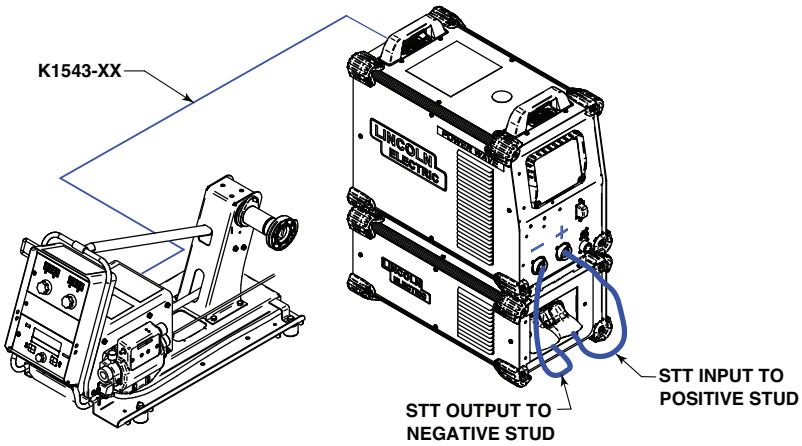

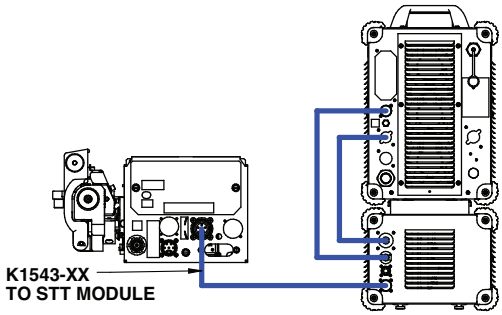

TEST PROCEDURE

- Enable test modes on the UI of the Wire Feeder.
  See Wire Feeder instruction manual (set-up menu selection P.99).
- Select test mode 208 (STT® Test Mode).
  If mode 208 is not available with the test modes enabled, the Power Source software must be updated.
- Enable the output.
  Pulling the trigger, or turn the trim knob clockwise.
- Read Voltage feedback displayed on the Wire Feeder Display.

Voltage	Indication / Possible Cause
< 2V	**STT® Switch Shorted:** • Faulty or disconnected Differential I/O control signal (grey cable located at rear of module). Verify cable connections (including those internal to the STT® Switch and host power source). • STT® Input tied to negative weld output (Reverse Polarity, typically accompanied by Error 99). Verify STT® Switch is properly connected. • STT® Switch Shorted (typically accompanied by Error 99). Disconnect and perform STT® Switch PCB Test.
5 - 10V	**Normal Operation**
> 40V	**STT® Switch Open:** • Loose or open connection. Verify weld cable connections (both internal and external to the module – including quick connections). • STT® Switch not closing (may be accompanied by Error 99). Verify status of the STT® Switch board via the "on board" diagnostic LED's.

⚠ CAUTION

If for any reason you do not understand the test procedures or are unable to perform the tests/repairs safely, contact your **Local Lincoln Authorized Field Service Facility** for technical troubleshooting assistance before you proceed.

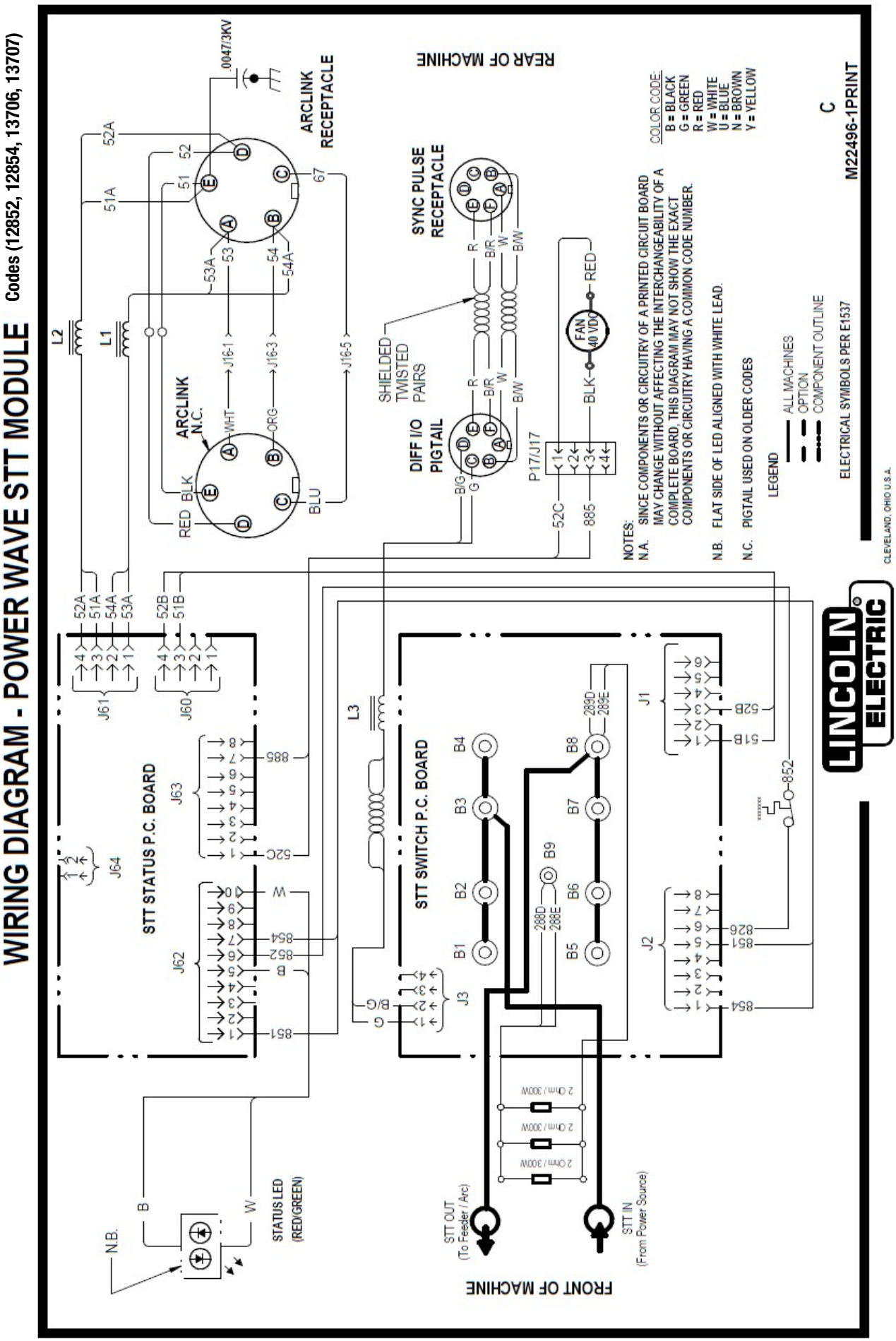

NOTE: This diagram is for reference only. It may not be accurate for all machines covered by this manual. The specific diagram for a particular code is pasted inside the machine on one of the enclosure panels. If the diagram is illegible, write to the Service Department for a replacement. Give the equipment code number.

WIRING DIAGRAM - POWER WAVE STT MODULE (CE) Codes (12853, 13708)

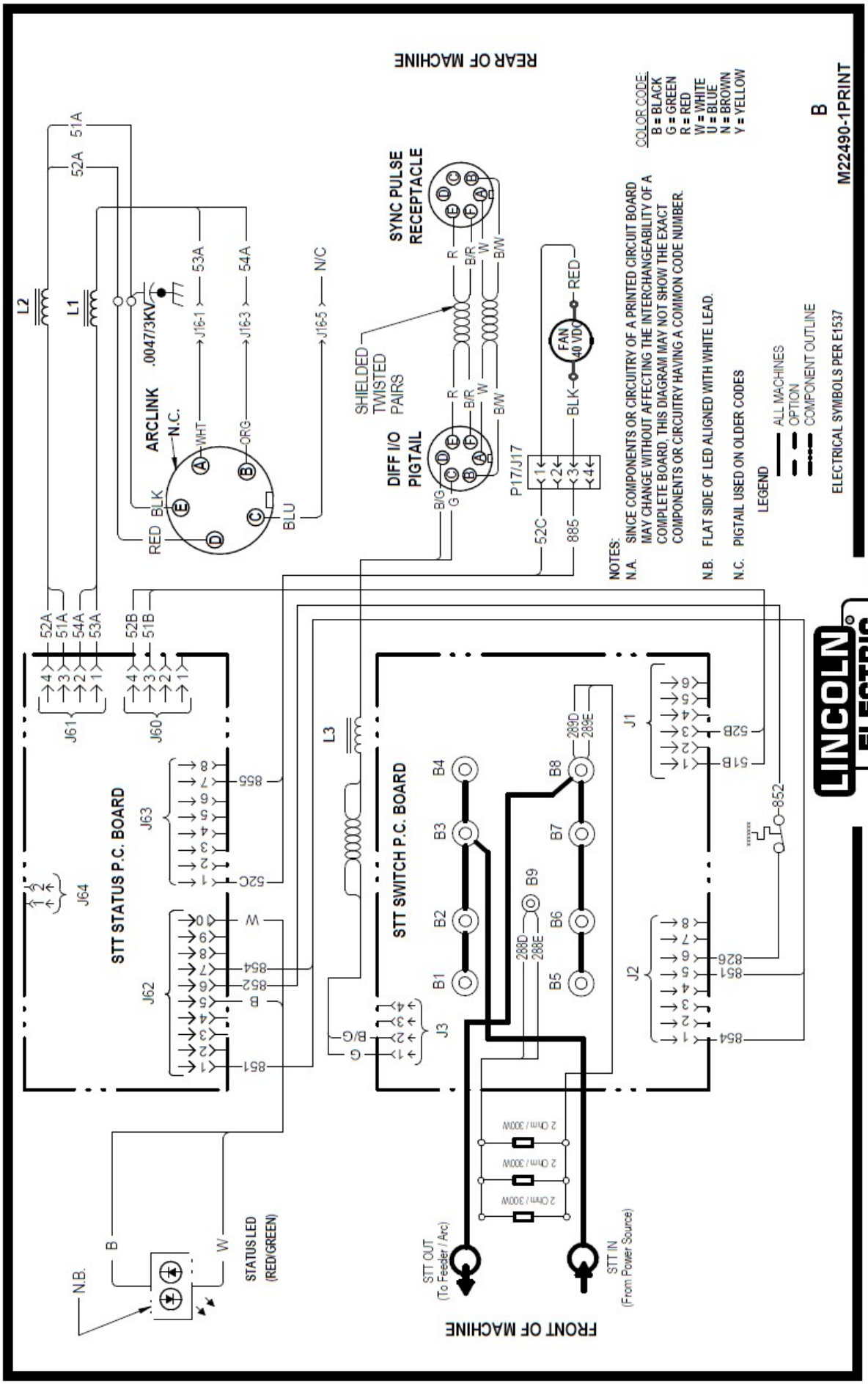

NOTE: This diagram is for reference only. It may not be accurate for all machines covered by this manual. The specific diagram for a particular code is pasted inside the machine on one of the enclosure panels. If the diagram is illegible, write to the Service Department for a replacement. Give the equipment code number.

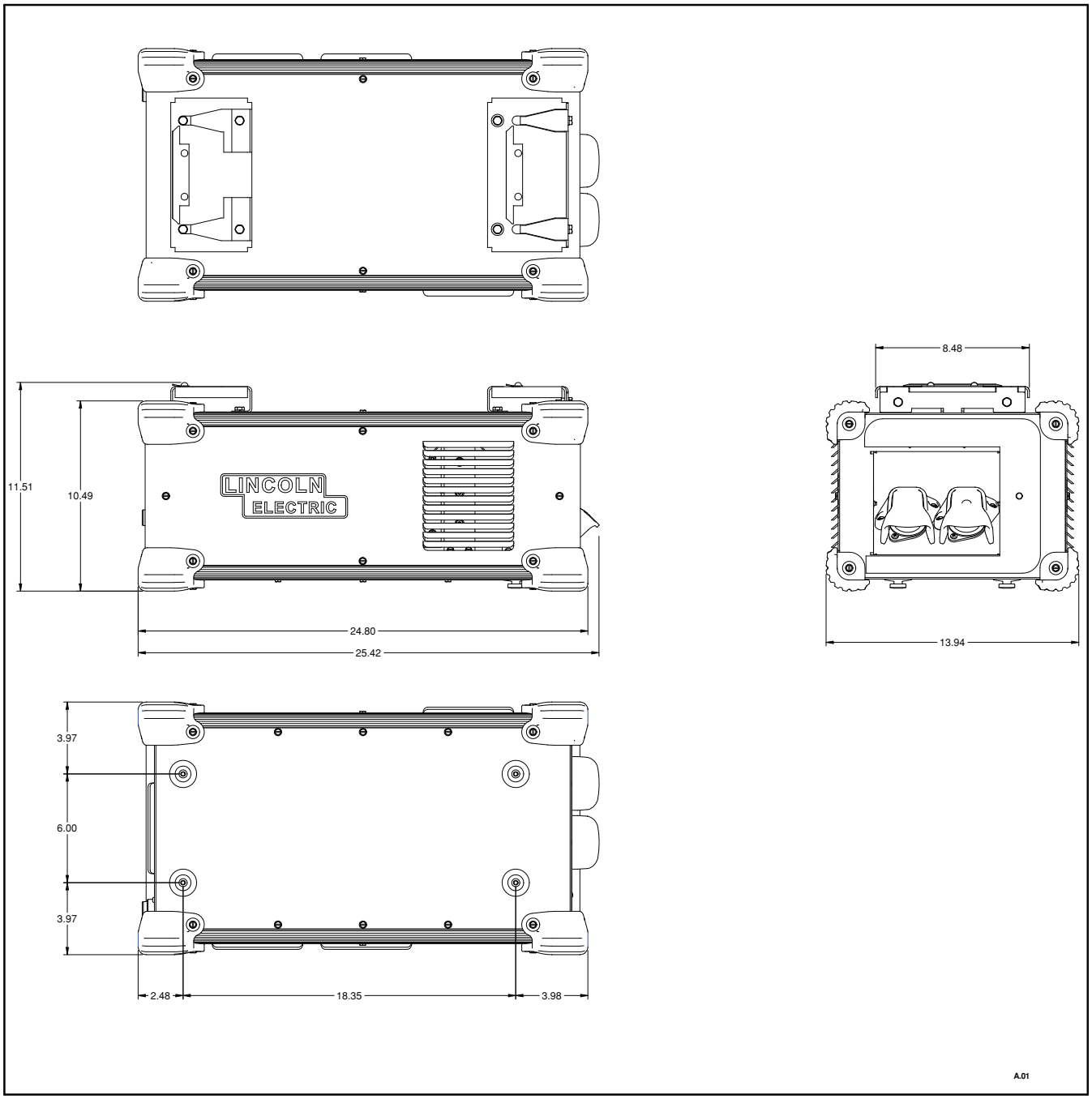
LINCOLN
ELECTRIC
11.51
10.49
24.80
25.42
8.48
13.94
3.97
6.00
3.97
2.48
18.35
3.98
A.01

L15814-2

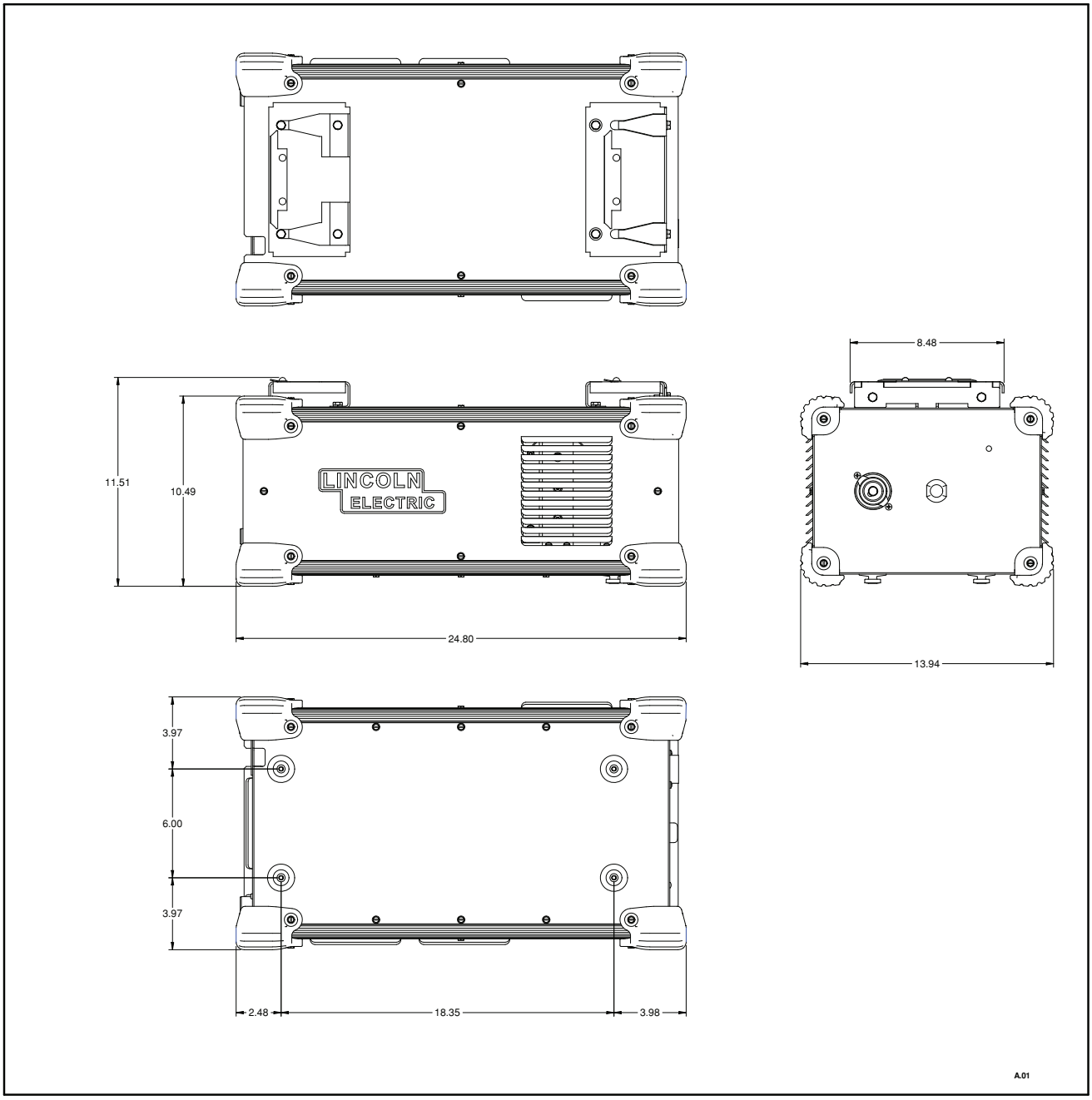
8.48
11.51
10.49
LINCOLN
ELECTRIC
24.80
13.94
3.97
6.00
3.97
2.48
18.35
3.98
A.01

L15814-1

WARNING	● Do not touch electrically live parts or electrode with skin or wet clothing. ● Insulate yourself from work and ground.	● Keep flammable materials away.	● Wear eye, ear and body protection.
Spanish **AVISO DE PRECAUCION**	● No toque las partes o los electrodos bajo carga con la piel o ropa mojada. ● Aislese del trabajo y de la tierra.	● Mantenga el material combustible fuera del área de trabajo.	● Protéjase los ojos, los oídos y el cuerpo.
French **ATTENTION**	● Ne laissez ni la peau ni des vêtements mouillés entrer en contact avec des pièces sous tension. ● Isolez-vous du travail et de la terre.	● Gardez à l'écart de tout matériel inflammable.	● Protégez vos yeux, vos oreilles et votre corps.
German **WARNUNG**	● Berühren Sie keine stromführenden Teile oder Elektroden mit Ihrem Körper oder feuchter Kleidung! ● Isolieren Sie sich von den Elektroden und dem Erdboden!	● Entfernen Sie brennbarres Material!	● Tragen Sie Augen-, Ohren- und Körperschutz!
Portuguese **ATENÇÃO**	● Não toque partes elétricas e electrodos com a pele ou roupa molhada. ● Isole-se da peça e terra.	● Mantenha inflamáveis bem guardados.	● Use proteção para a vista, ouvido e corpo.
Japanese **注意事項**	● 通電中の電気部品、又は溶材にヒフやぬれた布で触れないこと。 ● 施工物やアースから身体が絶縁されている様にして下さい。	● 燃えやすいものの側での溶接作業は絶対にしてはなりません。	● 目、耳及び身体に保護具をして下さい。
Chinese **警 告**	● 皮肤或濕衣物切勿接觸帶電部件及銲條。 ● 使你自己與地面和工件絶緣。	● 把一切易燃物品移離工作場所。	● 佩戴眼、耳及身體勞動保護用具。
Korean **위 험**	● 전도체나 용접봉을 젖은 헝겁 또는 피부로 절대 접촉치 마십시요. ● 모재와 접지를 접촉치 마십시요.	● 인화성 물질을 접근 시키지 마시요.	● 눈, 귀와 몸에 보호장구를 착용하십시요.
Arabic **تحذير**	● لا تلمس الاجزاء التي يسري فيها التيار الكهربائي أو الالكترود بجلد الجسم أو بالملابس المبللة بالماء. ● ضع عازلا على جسمك خلال العمل.	● ضع المواد القابلة للاشتعال في مكان بعيد.	● ضع أدوات وملابس واقية على عينيك وأذنيك وجسمك.

READ AND UNDERSTAND THE MANUFACTURER'S INSTRUCTION FOR THIS EQUIPMENT AND THE CONSUMABLES TO BE USED AND FOLLOW YOUR EMPLOYER'S SAFETY PRACTICES.

SE RECOMIENDA LEER Y ENTENDER LAS INSTRUCCIONES DEL FABRICANTE PARA EL USO DE ESTE EQUIPO Y LOS CONSUMIBLES QUE VA A UTILIZAR, SIGA LAS MEDIDAS DE SEGURIDAD DE SU SUPERVISOR.

LISEZ ET COMPRENEZ LES INSTRUCTIONS DU FABRICANT EN CE QUI REGARDE CET EQUIPMENT ET LES PRODUITS A ETRE EMPLOYES ET SUIVEZ LES PROCEDURES DE SECURITE DE VOTRE EMPLOYEUR.

LESEN SIE UND BEFOLGEN SIE DIE BETRIEBSANLEITUNG DER ANLAGE UND DEN ELEKTRODENEINSATZ DES HERSTELLERS. DIE UNFALLVERHÜTUNGSVORSCHRIFTEN DES ARBEITGEBERS SIND EBENFALLS ZU BEACHTEN.

● Keep your head out of fumes. ● Use ventilation or exhaust to remove fumes from breathing zone.	● Turn power off before servicing.	● Do not operate with panel open or guards off.	**WARNING**
● Los humos fuera de la zona de respiración. ● Mantenga la cabeza fuera de los humos. Utilice ventilación o aspiración para gases.	● Desconectar el cable de alimentación de poder de la máquina antes de iniciar cualquier servicio.	● No operar con panel abierto o guardas quitadas.	Spanish **AVISO DE PRECAUCION**
● Gardez la tête à l'écart des fumées. ● Utilisez un ventilateur ou un aspirateur pour ôter les fumées des zones de travail.	● Débranchez le courant avant l'entretien.	● N'opérez pas avec les panneaux ouverts ou avec les dispositifs de protection enlevés.	French **ATTENTION**
● Vermeiden Sie das Einatmen von Schweibrauch! ● Sorgen Sie für gute Be- und Entlüftung des Arbeitsplatzes!	● Strom vor Wartungsarbeiten abschalten! (Netzstrom völlig öffnen; Maschine anhalten!)	● Anlage nie ohne Schutzgehäuse oder Innenschutzverkleidung in Betrieb setzen!	German **WARNUNG**
● Mantenha seu rosto da fumaça. ● Use ventilação e exhaustão para remover fumo da zona respiratória.	● Não opere com as tampas removidas. ● Desligue a corrente antes de fazer serviço. ● Não toque as partes elétricas nuas.	● Mantenha-se afastado das partes moventes. ● Não opere com os paineis abertos ou guardas removidas.	Portuguese **ATENÇÃO**
● ヒュームから頭を離すようにして下さい。 ● 換気や排煙に十分留意して下さい。	● メンテナンス・サービスに取りかかる際には、まず電源スイッチを必ず切って下さい。	● パネルやカバーを取り外したままで機械操作をしないで下さい。	Japanese **注意事項**
● 頭部遠離煙霧。 ● 在呼吸區使用通風或排風器除煙。	● 維修前切斷電源。	● 儀表板打開或沒有安全罩時不準作業。	Chinese **警 告**
● 얼굴로부터 용접가스를 멀리하십시요. ● 호흡지역으로부터 용접가스를 제거하기 위해 가스제거기나 통풍기를 사용하십시요.	● 보수전에 전원을 차단하십시요.	● 판넬이 열린 상태로 작동치 마십시요.	Korean **위 험**
● ابعد رأسك بعيداً عن الدخان. ● استعمل التهوية أو جهاز ضغط الدخان للخارج لكي تبعد الدخان عن المنطقة التي تتنفس فيها.	● اقطع التيار الكهربائي قبل القيام بأية صيانة.	● لا تشغل هذا الجهاز اذا كانت الاغطية الحديدية الواقية ليست عليه.	Arabic **تحذير**

LEIA E COMPREENDA AS INSTRUÇÕES DO FABRICANTE PARA ESTE EQUIPAMENTO E AS PARTES DE USO, E SIGA AS PRÁTICAS DE SEGURANÇA DO EMPREGADOR.

使う機械や溶材のメーカーの指示書をよく読み、まず理解して下さい。そして貴社の安全規定に従って下さい。

請詳細閱讀並理解製造廠提供的説明以及應該使用的銀捍材料，並請遵守貴方的有関勞動保護規定。

이 제품에 동봉된 작업지침서를 숙지하시고 귀사의 작업자 안전수칙을 준수하시기 바랍니다.

اقرأ بتمعن وافهم تعليمات المصنع المنتج لهذه المعدات والمواد قبل استعمالها واتبع تعليمات الوقاية لصاحب العمل.

CUSTOMER ASSISTANCE POLICY

The business of Lincoln Electric is manufacturing and selling high quality welding equipment, automated welding systems, consumables, and cutting equipment. Our challenge is to meet the needs of our customers, who are experts in their fields, and to exceed their expectations. On occasion, purchasers may ask Lincoln Electric for information or technical information about their use of our products. Our employees respond to inquiries to the best of their ability based on information and specifications provided to them by the customers and the knowledge they may have concerning the application. Our employees, however, are not in a position to verify the information provided or to evaluate the engineering requirements for the particular weldment, or to provide engineering advice in relation to a specific situation or application. Accordingly, Lincoln Electric does not warrant or guarantee or assume any liability with respect to such information or communications. Moreover, the provision of such information or technical information does not create, expand, or alter any warranty on our products. Any express or implied warranty that might arise from the information or technical information, including any implied warranty of merchantability or any warranty of fitness for any customers' particular purpose or any other equivalent or similar warranty is specifically disclaimed.

Lincoln Electric is a responsive manufacturer, but the definition of specifications, and the selection and use of specific products sold by Lincoln Electric is solely within the control of, and remains the sole responsibility of the customer. Many variables beyond the control of Lincoln Electric affect the results obtained in applying these types of fabrication methods and service requirements.

WELD FUME CONTROL EQUIPMENT

The operation of welding fume control equipment is affected by various factors including proper use and positioning of the equipment, maintenance of the equipment and the specific welding procedure and application involved. Worker exposure level should be checked upon installation and periodically thereafter to be certain it is within applicable OSHA PEL and ACGIH TLV limits.

THE LINCOLN ELECTRIC COMPANY
22801 St. Clair Avenue • Cleveland, OH • 44117-1199 • U.S.A.
Phone: +1.216.481.8100 • www.lincolnelectric.com