IM10116

October, 2012

HYDROGUARD™ ROD OVENS 350

For use with machines having Sales Spec: **K2942-1**
K2942-2

Safety Depends on You

Lincoln arc welding and cutting equipment is designed and built with safety in mind. However, your overall safety can be increased by proper installation ... and thoughtful operation on your part. **DO NOT INSTALL, OPERATE OR REPAIR THIS EQUIPMENT WITHOUT READING THIS MANUAL AND THE SAFETY PRECAUTIONS CONTAINED THROUGHOUT.** And, most importantly, think before you act and be careful.

Please download the instruction manual in English from :
Per favore scaricate il manuale di istruzioni in Italiano da :
Bitte laden Sie sich die Bedienungsanleitung in deutscher Sprache von :
Por favor, descargue el manual de instrucciones en español de :
S'il vous plaît télécharger le mode d'emploi en français à partir de :
Download de handleiding in het Nederlands uit:
Proszę pobrać instrukcję obsługi w języku polskim z :
Lataa käyttöohjetta suomi alkaen :
Faça o download do manual de instruções em Português a partir de :
Вы можете скачать инструкцию по эксплуатации на русском языке от:

http://servicenavigator.lincolnelectric.eu/index.php

LINCOLN ELECTRIC EUROPE S.L
c/o Balmes, 89 - 80 2a, 08008 Barcelona, Spain
www.lincolnelectric.eu

OPERATOR'S MANUAL

PN-5610770

Copyright © Lincoln Global Inc.

LINCOLN® ELECTRIC

• World's Leader in Welding and Cutting Products •
• Sales and Service through Subsidiaries and Distributors Worldwide •
Cleveland, Ohio 44117-1199 U.S.A. TEL: 216.481.8100 FAX: 216.486.1751 WEB SITE: www.lincolnelectric.com

THANK YOU FOR SELECTING A QUALITY PRODUCT BY LINCOLN ELECTRIC.

PLEASE EXAMINE CARTON AND EQUIPMENT FOR DAMAGE IMMEDIATELY

When this equipment is shipped, title passes to the purchaser upon receipt by the carrier. Consequently, claims for material damaged in shipment must be made by the purchaser against the transportation company at the time the shipment is received.

SAFETY DEPENDS ON YOU

Lincoln arc welding and cutting equipment is designed and built with safety in mind. However, your overall safety can be increased by proper installation ... and thoughtful operation on your part. **DO NOT INSTALL, OPERATE OR REPAIR THIS EQUIPMENT WITHOUT READING THIS MANUAL AND THE SAFETY PRECAUTIONS CONTAINED THROUGHOUT.** And, most importantly, think before you act and be careful.

⚠ WARNING

This statement appears where the information must be followed exactly to avoid serious personal injury or loss of life.

⚠ CAUTION

This statement appears where the information must be followed to avoid minor personal injury or damage to this equipment.

KEEP YOUR HEAD OUT OF THE FUMES.

DON'T get too close to the arc. Use corrective lenses if necessary to stay a reasonable distance away from the arc.

READ and obey the Safety Data Sheet (SDS) and the warning label that appears on all containers of welding materials.

USE ENOUGH VENTILATION or exhaust at the arc, or both, to keep the fumes and gases from your breathing zone and the general area.

IN A LARGE ROOM OR OUTDOORS, natural ventilation may be adequate if you keep your head out of the fumes (See below).

USE NATURAL DRAFTS or fans to keep the fumes away from your face.

If you develop unusual symptoms, see your supervisor. Perhaps the welding atmosphere and ventilation system should be checked.

WEAR CORRECT EYE, EAR & BODY PROTECTION

PROTECT your eyes and face with welding helmet properly fitted and with proper grade of filter plate (See ANSI Z49.1).

PROTECT your body from welding spatter and arc flash with protective clothing including woolen clothing, flame-proof apron and gloves, leather leggings, and high boots.

PROTECT others from splatter, flash, and glare with protective screens or barriers.

IN SOME AREAS, protection from noise may be appropriate.

BE SURE protective equipment is in good condition.

Also, wear safety glasses in work area **AT ALL TIMES.**

SPECIAL SITUATIONS

DO NOT WELD OR CUT containers or materials which previously had been in contact with hazardous substances unless they are properly cleaned. This is extremely dangerous.

DO NOT WELD OR CUT painted or plated parts unless special precautions with ventilation have been taken. They can release highly toxic fumes or gases.

Additional precautionary measures

PROTECT compressed gas cylinders from excessive heat, mechanical shocks, and arcs; fasten cylinders so they cannot fall.

BE SURE cylinders are never grounded or part of an electrical circuit.

REMOVE all potential fire hazards from welding area.

ALWAYS HAVE FIRE FIGHTING EQUIPMENT READY FOR IMMEDIATE USE AND KNOW HOW TO USE IT.

SECTION A: WARNINGS

CALIFORNIA PROPOSITION 65 WARNINGS

WARNING: Breathing diesel engine exhaust exposes you to chemicals known to the State of California to cause cancer and birth defects, or other reproductive harm.

- Always start and operate the engine in a well-ventilated area.
- If in an exposed area, vent the exhaust to the outside.
- Do not modify or tamper with the exhaust system.
- Do not idle the engine except as necessary.

For more information go to www.P65 warnings.ca.gov/diesel

WARNING: This product, when used for welding or cutting, produces fumes or gases which contain chemicals known to the State of California to cause birth defects and, in some cases, cancer. (California Health & Safety Code § 25249.5 *et seq.)*

WARNING: Cancer and Reproductive Harm www.P65warnings.ca.gov

ARC WELDING CAN BE HAZARDOUS. PROTECT YOURSELF AND OTHERS FROM POSSIBLE SERIOUS INJURY OR DEATH. KEEP CHILDREN AWAY. PACEMAKER WEARERS SHOULD CONSULT WITH THEIR DOCTOR BEFORE OPERATING.

Read and understand the following safety highlights. For additional safety information, it is strongly recommended that you purchase a copy of "Safety in Welding & Cutting - ANSI Standard Z49.1" from the American Welding Society, P.O. Box 351040, Miami, Florida 33135 or CSA Standard W117.2-1974. A Free copy of "Arc Welding Safety" booklet E205 is available from the Lincoln Electric Company, 22801 St. Clair Avenue, Cleveland, Ohio 44117-1199.

BE SURE THAT ALL INSTALLATION, OPERATION, MAINTENANCE AND REPAIR PROCEDURES ARE PERFORMED ONLY BY QUALIFIED INDIVIDUALS.

FOR ENGINE POWERED EQUIPMENT.

1.a. Turn the engine off before troubleshooting and maintenance work unless the maintenance work requires it to be running.

1.b. Operate engines in open, well-ventilated areas or vent the engine exhaust fumes outdoors.

1.c. Do not add the fuel near an open flame welding arc or when the engine is running. Stop the engine and allow it to cool before refueling to prevent spilled fuel from vaporizing on contact with hot engine parts and igniting. Do not spill fuel when filling tank. If fuel is spilled, wipe it up and do not start engine until fumes have been eliminated.

1.d. Keep all equipment safety guards, covers and devices in position and in good repair. Keep hands, hair, clothing and tools away from V-belts, gears, fans and all other moving parts when starting, operating or repairing equipment.

1.e. In some cases it may be necessary to remove safety guards to perform required maintenance. Remove guards only when necessary and replace them when the maintenance requiring their removal is complete. Always use the greatest care when working near moving parts.

1.f. Do not put your hands near the engine fan. Do not attempt to override the governor or idler by pushing on the throttle control rods while the engine is running.

1.g. To prevent accidentally starting gasoline engines while turning the engine or welding generator during maintenance work, disconnect the spark plug wires, distributor cap or magneto wire as appropriate.

1.h. To avoid scalding, do not remove the radiator pressure cap when the engine is hot.

ELECTRIC AND MAGNETIC FIELDS MAY BE DANGEROUS

2.a. Electric current flowing through any conductor causes localized Electric and Magnetic Fields (EMF). Welding current creates EMF fields around welding cables and welding machines

2.b. EMF fields may interfere with some pacemakers, and welders having a pacemaker should consult their physician before welding.

2.c. Exposure to EMF fields in welding may have other health effects which are now not known.

2.d. All welders should use the following procedures in order to minimize exposure to EMF fields from the welding circuit:

2.d.1. Route the electrode and work cables together - Secure them with tape when possible.

2.d.2. Never coil the electrode lead around your body.

2.d.3. Do not place your body between the electrode and work cables. If the electrode cable is on your right side, the work cable should also be on your right side.

2.d.4. Connect the work cable to the workpiece as close as possible to the area being welded.

2.d.5. Do not work next to welding power source.

ELECTRIC SHOCK CAN KILL.

3.a. The electrode and work (or ground) circuits are electrically "hot" when the welder is on. Do not touch these "hot" parts with your bare skin or wet clothing. Wear dry, hole-free gloves to insulate hands.

3.b. Insulate yourself from work and ground using dry insulation. Make certain the insulation is large enough to cover your full area of physical contact with work and ground.

In addition to the normal safety precautions, if welding must be performed under electrically hazardous conditions (in damp locations or while wearing wet clothing; on metal structures such as floors, gratings or scaffolds; when in cramped positions such as sitting, kneeling or lying, if there is a high risk of unavoidable or accidental contact with the workpiece or ground) use the following equipment:

- Semiautomatic DC Constant Voltage (Wire) Welder.
- DC Manual (Stick) Welder.
- AC Welder with Reduced Voltage Control.

3.c. In semiautomatic or automatic wire welding, the electrode, electrode reel, welding head, nozzle or semiautomatic welding gun are also electrically "hot".

3.d. Always be sure the work cable makes a good electrical connection with the metal being welded. The connection should be as close as possible to the area being welded.

3.e. Ground the work or metal to be welded to a good electrical (earth) ground.

3.f. Maintain the electrode holder, work clamp, welding cable and welding machine in good, safe operating condition. Replace damaged insulation.

3.g. Never dip the electrode in water for cooling.

3.h. Never simultaneously touch electrically "hot" parts of electrode holders connected to two welders because voltage between the two can be the total of the open circuit voltage of both welders.

3.i. When working above floor level, use a safety belt to protect yourself from a fall should you get a shock.

3.j. Also see Items 6.c. and 8.

ARC RAYS CAN BURN.

4.a. Use a shield with the proper filter and cover plates to protect your eyes from sparks and the rays of the arc when welding or observing open arc welding. Headshield and filter lens should conform to ANSI Z87. I standards.

4.b. Use suitable clothing made from durable flame-resistant material to protect your skin and that of your helpers from the arc rays.

4.c. Protect other nearby personnel with suitable, non-flammable screening and/or warn them not to watch the arc nor expose themselves to the arc rays or to hot spatter or metal.

FUMES AND GASES CAN BE DANGEROUS.

5.a. Welding may produce fumes and gases hazardous to health. Avoid breathing these fumes and gases. When welding, keep your head out of the fume. Use enough ventilation and/or exhaust at the arc to keep fumes and gases away from the breathing zone. **When welding hardfacing (see instructions on container or SDS) or on lead or cadmium plated steel and other metals or coatings which produce highly toxic fumes, keep exposure as low as possible and within applicable OSHA PEL and ACGIH TLV limits using local exhaust or mechanical ventilation unless exposure assessments indicate otherwise. In confined spaces or in some circumstances, outdoors, a respirator may also be required. Additional precautions are also required when welding on galvanized steel.**

5. b. The operation of welding fume control equipment is affected by various factors including proper use and positioning of the equipment, maintenance of the equipment and the specific welding procedure and application involved. Worker exposure level should be checked upon installation and periodically thereafter to be certain it is within applicable OSHA PEL and ACGIH TLV limits.

5.c. Do not weld in locations near chlorinated hydrocarbon vapors coming from degreasing, cleaning or spraying operations. The heat and rays of the arc can react with solvent vapors to form phosgene, a highly toxic gas, and other irritating products.

5.d. Shielding gases used for arc welding can displace air and cause injury or death. Always use enough ventilation, especially in confined areas, to insure breathing air is safe.

5.e. Read and understand the manufacturer's instructions for this equipment and the consumables to be used, including the Safety Data Sheet (SDS) and follow your employer's safety practices. SDS forms are available from your welding distributor or from the manufacturer.

5.f. Also see item 1.b.

WELDING AND CUTTING SPARKS CAN CAUSE FIRE OR EXPLOSION.

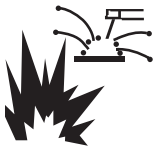

6.a. Remove fire hazards from the welding area. If this is not possible, cover them to prevent the welding sparks from starting a fire. Remember that welding sparks and hot materials from welding can easily go through small cracks and openings to adjacent areas. Avoid welding near hydraulic lines. Have a fire extinguisher readily available.

6.b. Where compressed gases are to be used at the job site, special precautions should be used to prevent hazardous situations. Refer to “Safety in Welding and Cutting” (ANSI Standard Z49.1) and the operating information for the equipment being used.

6.c. When not welding, make certain no part of the electrode circuit is touching the work or ground. Accidental contact can cause overheating and create a fire hazard.

6.d. Do not heat, cut or weld tanks, drums or containers until the proper steps have been taken to insure that such procedures will not cause flammable or toxic vapors from substances inside. They can cause an explosion even though they have been “cleaned”. For information, purchase “Recommended Safe Practices for the Preparation for Welding and Cutting of Containers and Piping That Have Held Hazardous Substances”, AWS F4.1 from the American Welding Society (see address above).

6.e. Vent hollow castings or containers before heating, cutting or welding. They may explode.

6.f. Sparks and spatter are thrown from the welding arc. Wear oil free protective garments such as leather gloves, heavy shirt, cuffless trousers, high shoes and a cap over your hair. Wear ear plugs when welding out of position or in confined places. Always wear safety glasses with side shields when in a welding area.

6.g. Connect the work cable to the work as close to the welding area as practical. Work cables connected to the building framework or other locations away from the welding area increase the possibility of the welding current passing through lifting chains, crane cables or other alternate circuits. This can create fire hazards or overheat lifting chains or cables until they fail.

6.h. Also see item 1.c.

6.I. Read and follow NFPA 51B “Standard for Fire Prevention During Welding, Cutting and Other Hot Work”, available from NFPA, 1 Batterymarch Park, PO box 9101, Quincy, MA 022690-9101.

6.j. Do not use a welding power source for pipe thawing.

CYLINDER MAY EXPLODE IF DAMAGED.

7.a. Use only compressed gas cylinders containing the correct shielding gas for the process used and properly operating regulators designed for the gas and pressure used. All hoses, fittings, etc. should be suitable for the application and maintained in good condition.

7.b. Always keep cylinders in an upright position securely chained to an undercarriage or fixed support.

7.c. Cylinders should be located:

- Away from areas where they may be struck or subjected to physical damage.
- A safe distance from arc welding or cutting operations and any other source of heat, sparks, or flame.

7.d. Never allow the electrode, electrode holder or any other electrically “hot” parts to touch a cylinder.

7.e. Keep your head and face away from the cylinder valve outlet when opening the cylinder valve.

7.f. Valve protection caps should always be in place and hand tight except when the cylinder is in use or connected for use.

7.g. Read and follow the instructions on compressed gas cylinders, associated equipment, and CGA publication P-I, “Precautions for Safe Handling of Compressed Gases in Cylinders,” available from the Compressed Gas Association, 14501 George Carter Way Chantilly, VA 20151.

FOR ELECTRICALLY POWERED EQUIPMENT.

8.a. Turn off input power using the disconnect switch at the fuse box before working on the equipment.

8.b. Install equipment in accordance with the U.S. National Electrical Code, all local codes and the manufacturer’s recommendations.

8.c. Ground the equipment in accordance with the U.S. National Electrical Code and the manufacturer’s recommendations.

Refer to http://www.lincolnelectric.com/safety for additional safety information.

WEEE

Do not dispose of electrical equipment together with normal waste!
In observance of European Directive 2002/96/EC on Waste Electrical and Electronic Equipment (WEEE) and its implementation in accordance with national law, electrical equipment that has reached the end of its life must be collected separately and returned to an environmentally compatible recycling facility. As the owner of the equipment, you should get information on approved collection systems from our local representative.
By applying this European Directive you will protect the environment and human health!

READ AND UNDERSTAND INSTRUCTIONS: Read and understand this manual before operating this equipment. Arc welding can be hazardous. Failure to follow the instructions in this manual could cause serious personal injury, loss of life, or damage to this equipment.

ELECTRICALLY POWERED EQUIPMENT: Regularly inspect the input, electrode, and work clamp cables. If any insulation damage exists replace the cable immediately. Do not place the electrode holder directly on the welding table or any other surface in contact with the work clamp to avoid the risk of accidental arc ignition.

CE COMPLIANCE: This equipment complies with the European Community Directives

WELDED MATERIALS CAN BURN: Welding generates a large amount of heat. Hot surfaces and materials in work area can cause serious burns. Use gloves and pliers when touching or moving materials in the work area.

SAFETY MARK: This equipment is suitable for supplying power for welding operations carried out in an environment with increased hazard of electric shock.

Declaration of conformity

12

Lincoln Electric Europe

Declares that the Rod Oven:

Hydroguard 350

Were tested to and meet the applicable requirements of the following test specifications:

EN60335-1:95 including amendments A1 and A2
EN60335-2-45:94

The ovens meet protection Class I – IPX0

15th September 2012
Pietro Terranova
Accessories Product Manager EMEA
Lincoln Electric Europe S.L, c/o Balmes, 89 – 8° 2a , 08008 Barcelona, Spain

Thank You

for selecting one of our **QUALITY** products. We want you to take pride in operating this product ••• as much pride as we have in bringing this product to you!

CUSTOMER ASSISTANCE POLICY

The business of our company is manufacturing and selling high quality welding equipment. Our challenge is to meet the needs of our customers and to exceed their expectations. On occasion, purchasers may ask us for advice or information about their use of our products. We respond to our customers based on the best information in our possession at that time. We are not in a position to warrant or guarantee such advice, and assume no liability, with respect to such information or advice. We expressly disclaim any warranty of any kind, including any warranty of fitness for any customer's particular purpose, with respect to such information or advice. As a matter of practical consideration, we also cannot assume any responsibility for updating or correcting any such information or advice once it has been given, nor does the provision of information or advice create, expand or alter any warranty with respect to the sale of our products.

We are a responsive manufacturer, but the selection and use of specific products sold by us is solely within the control of, and remains the sole responsibility of the customer. Many variables beyond our control affect the results obtained in applying these types of fabrication methods and service requirements.

Subject to Change – This information is accurate to the best of our knowledge at the time of printing.

Please Examine Carton and Equipment For Damage Immediately

When this equipment is shipped, title passes to the purchaser upon receipt by the carrier. Consequently, Claims for material damaged in shipment must be made by the purchaser against the transportation company at the time the shipment is received.

Please record your equipment identification information below for future reference. This information can be found on your machine nameplate.

Product _____

Sales Spec. _____

Serial Number (if available)_____

Date Purchased_____

Where Purchased_____

Whenever you request replacement parts or information on this equipment, always supply the information you have recorded above.

Read this Operators Manual completely before attempting to use this equipment. Save this manual and keep it handy for quick reference. Pay particular attention to the safety instructions we have provided for your protection. The level of seriousness to be applied to each is explained below:

⚠ WARNING

This statement appears where the information **must** be followed **exactly** to avoid **serious personal injury** or **loss of life**.

⚠ CAUTION

This statement appears where the information **must** be followed to avoid **minor personal injury** or **damage to this equipment**.

TABLE OF CONTENTS

Page

Installation ..... **Section A**
Technical Specifications A-1
Feet Hole Pattern A-1

Operation ..... **Section B**
General Description B-1

Accessories ..... **Section C**

Maintenance ..... **Section D**

Troubleshooting ..... **Section E**
Safety Precautions E-1
How to Use Troubleshooting Guide E-1
Troubleshooting Guide E-2

Wiring Diagrams ..... **Section F1, F-2**

Parts **F-3**

TECHNICAL SPECIFICATIONS - HYDROGUARD™ ROD OVENS 350 K2942-1, K2942-2

Input Watts=1000W	Input Amps: 120V-8A, 240V-4A, 480V-2A
Voltage	K2942-1 120V @50/60Hz K2942-2 240/480V @50/60Hz
Temperature Range	38°C / 100°F to 288°C / 550°F ±14°C / 25°F Adjustable thermostat control with indicator light.
Insulation	5cm. / 2in. glass fiber batt.
Chamber Size	46cm. dia. x 48cm. deep 18in. dia. x 19in. deep
Net Weight	41kg. / 90lbs.
Net Dimensions	75cm. x 57cm. x 57cm. 29.5in.x 22.5in. x 22.5in.
Shipping Weight	52kg. / 115lbs.
Shipping Dimensions	66cm. x 84cm. x 69cm. 26in. x 33in. x 27in.

ATTACHMENT PLUG

In all cases, the green or green/yellow grounding wire must be connected to the grounding pin of the plug, usually identified by a green screw.

All attachment plugs must comply with the Standard for Attachment Plugs and Receptacles.

The product is considered acceptable for use only when an attachment plug as specified is properly attached to the supply cord.

BOTTOM VIEW SHOWING FEET HOLE PATTERN

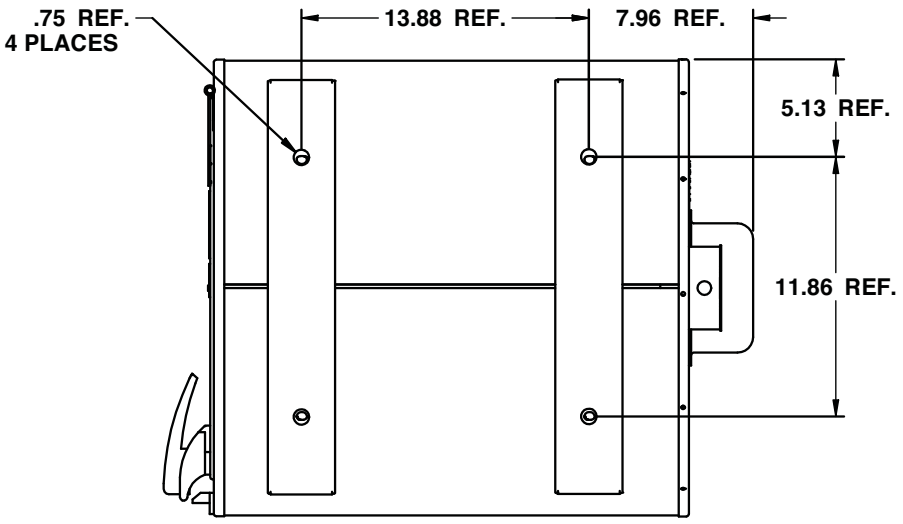

HYDROGUARD™ ROD OVENS 350

⚠ WARNING

ELECTRIC SHOCK CAN KILL

- TO PROVIDE CONTINUED PROTECTION AGAINST RISK OF ELECTRIC SHOCK, CONNECT TO PROPERLY GROUNDED OUTLET ONLY.
- OVEN CONTACT WITH WELDING CURRENT CAN BE DANGEROUS AND MAY RESULT IN INJURY AND PRODUCT DAMAGE.
- ALL WIRING REPAIRS SHOULD BE DONE BY QUALIFIED ELECTRICIAN. FAILURE TO DO SO MAY RESULT IN ELECTRIC SHOCK, SERIOUS PERSONAL INJURY OR DAMAGE TO UNIT.

HOT SURFACE

- EXPOSURE TO EXTREME TEMPERATURES CAN CAUSE INJURY. UTILIZE PROPER PROTECTION WHEN OPERATING UNIT.

KEEP DRY

- UNIT NOT TO BE EXPOSED TO RAIN OR MOISTURE. STORE IN DRY LOCATION.

GENERAL DESCRIPTION

WIRING

Check type and voltage on nameplate.

1. Hydroguard™ 350, Model K2942-1 (120 volts AC only) single phase.

2. Hydroguard™ 350, Model K2942-2 (240/480 volts AC only) single phase.

***Note:** 240/480 volt models are wired at the factory for 240 volts. For 480 volt use, change heating element jumper connections. Provide a plug of the corresponding voltage rating for connection to the power supply.

GROUNDING

1. The 120 volt ovens have a two blade plug with grounding prong (NEMA 5-15P) attached to a 10 foot power supply cord. When used with a grounded receptacle, these ovens meet all local electrical code requirements and are UL Listed.

2. The 240/480 volt ovens have a 10 foot power supply cord. When used with a grounding plug and a grounded receptacle, these ovens meet all local code requirements.

ELECTRODE PLACEMENT

Your Hydroguard™ 350 oven has removable shelves to allow storage of bulk or wire reel electrodes. Avoid treating EXX10 or EXX11 types at the same time with EXX15, EXX16 and EXX18 electrodes as their holding temperatures vary widely. Spread the electrodes evenly, allowing space over each shelf for air circulation required to remove excess moisture. 5" is the maximum suggested layer depth on any shelf.

ELECTRODE STORAGE REQUIREMENTS

Lincoln Electric recommends a minimum oven temperature of 120°C / 250°F. This minimum temperature rating will be obtained as long as the unit is used in an environment where the temperature is above freezing, 0°C / 32°F. Specific information involving recommended electrode storage can be accessed on line:

http://www.lincolnelectric.com/en-us/support/welding-how-to/pages/storing-electrodes-detail.aspx

VENTING

For normal holding operation, adjust vent on the door about 1/4 open.

TEMPERATURE SETTING

Temperature range is 38°C / 100°F to 288°C / 550°F. The Thermostat Dial (located at rear of oven) is calibrated from 38°C / 100°F to 288°C / 550°F. Required oven temperature setting is obtained by rotation of dial to line up desired temperature with the arrow on the thermostat housing.

An indicator light illuminates only when voltage is applied to the heating elements. Momentary rotation passed desired temperature setting may be necessary to activate the indicator light in order to locate it for indexing purposes.

Thermostat is accurate to 14°C / ± 25°F at the sensing bulb, however, temperature may vary slightly at different areas in the oven chamber since this is a convection type oven.

⚠ WARNING

Excess Heat: At the maximum setting, the actual temperature in portions of the oven near the heating elements may reach approximately 350°C / 660°F. Temperatures over 290°C / 550°F are not recommended. They may cause oven damage and/or unacceptably high exterior surface temperatures.

K3148-1 THERMOMETER KIT

INSTALLATION OPTIONAL DOOR MOUNTING THERMOMETER KIT

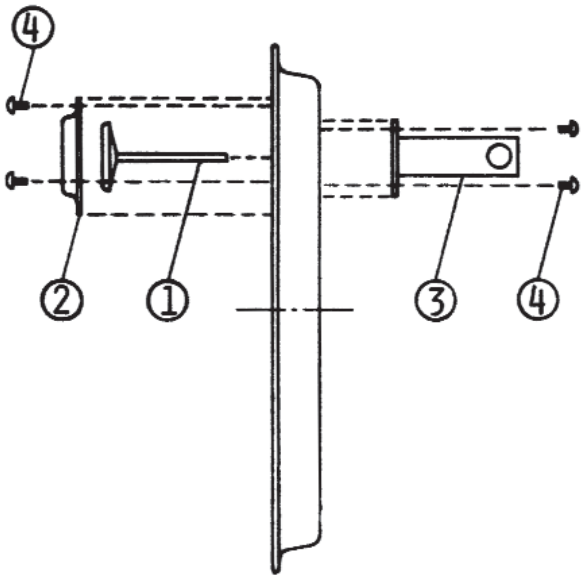

1. Remove cover on door to access mounting holes.
2. Mount guard 3 with screws 4 as shown.
3. Mount thermometer 1 and bezel 2 with screws 4.
4. Make sure that the dial is properly aligned before tightening screws.

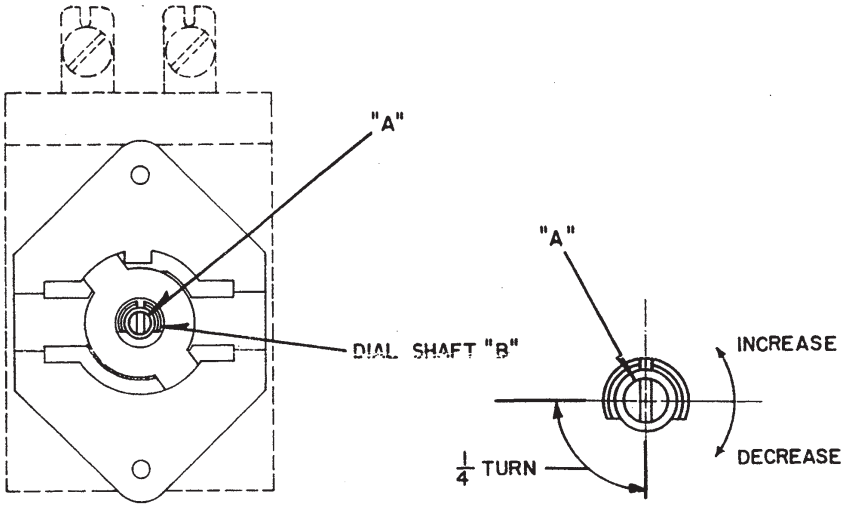

TEMPERATURE ACCURACY / CALIBRATION PROCEDURE

• TO CHECK ACCURACY

1. Use a good grade thermometer to check temperature.
2. Turn the dial of the thermostat to 163°C / 325°F mark.
3. Allow enough time for temperature to stabilize, or until several temperature readings are identical.

• TO CALIBRATION PROCEDURE (IF NECESSARY)

4. Remove knob from dial shaft “B”, by pulling straight out.
5. With screwdriver, turn screw “A” clockwise to decrease and counter-clockwise to increase temperature. Do not allow dial shaft “B” to turn during this operation. The chart below shows the approximate value of 1/4 turn of screw “A” when used on the respective temperature ranges.

Temp. Range in Degrees	1/4 Turn in Degrees
65°C to 260°C 150°F to 500°F	1.7°C 35°F

6. Replace knob or control dial.

After a calibration is made let the appliance operate until the temperature has stabilized, then recheck to determine whether or not the inaccuracy has been corrected.

HOW TO USE TROUBLESHOOTING GUIDE

⚠ WARNING

Service and Repair should only be performed by Trained Personnel. Unauthorized repairs performed on this equipment may result in danger to the technician and machine operator and will invalidate your factory warranty. For your safety and to avoid Electrical Shock, please observe all safety notes and precautions detailed throughout this manual.

This Troubleshooting Guide is provided to help you locate and repair possible machine malfunctions. Simply follow the three-step procedure listed below.

Step 1. LOCATE PROBLEM (SYMPTOM).
Look under the column labeled "PROBLEM (SYMPTOMS)". This column describes possible symptoms that the machine may exhibit. Find the listing that best describes the symptom that the machine is exhibiting.

Step 2. POSSIBLE CAUSE.
The second column labeled "POSSIBLE CAUSE" lists the obvious external possibilities that may contribute to the machine symptom.

Step 3. RECOMMENDED COURSE OF ACTION
This column provides a course of action for the Possible Cause, generally it states to contact your local Field Service Facility.

If you do not understand or are unable to perform the Recommended Course of Action safely, contact your local Field Service Facility.

⚠ CAUTION

All wiring should be done by licensed electricians in accordance with local codes. Improper installation or use may result in serious injury. Always remove oven from power source before troubleshooting or repairing.

⚠ CAUTION

If for any reason you do not understand the test procedures or are unable to perform the tests/repairs safely, contact your **Local Field Service Facility** for technical troubleshooting assistance before you proceed.

Observe all Safety Guidelines detailed throughout this manual

PROBLEMS (SYMPTOMS)	POSSIBLE CAUSE	RECOMMENDED COURSE OF ACTION
Oven fails to operate-No Heat.	1. If oven indicator light will not illuminate, check power supply. 2. Check plug at outer end of power cord and run continuity check on complete power cord. If defective, replace cord assembly. 3. Check thermostat at rear of oven. If indicator light illuminates, power is being supplied through thermostat to dual heating elements. Turn knob from low to high setting and return. Definite "snap" should be heard at low temperature end and indicator light should turn off and on with each "snap" cycle. If "snap" is not heard and indicator light fails to operate, replace entire thermostat. 4. If thermostat operates satisfactorily, check continuity of dual hairpin style heating elements at bottom center of oven. Failure of one element will prevent oven operation on 480 volts. If operating on 120 or 240 volts failure of one element will cause very slow heating. 5. Remove oven from power source. Replace BOTH elements. Pairing of one new element with an old element may cause rapid failure of old element.	If all recommended possible areas of misadjustment have been checked and the problem persists, **Contact your local Field Service Facility.**

⚠ CAUTION

If for any reason you do not understand the test procedures or are unable to perform the tests/repairs safely, contact your **Local Field Service Facility** for technical troubleshooting assistance before you proceed.

Observe all Safety Guidelines detailed throughout this manual

PROBLEMS (SYMPTOMS)	POSSIBLE CAUSE	RECOMMENDED COURSE OF ACTION
Oven Operates- Overheats.	1. Check thermostat operation - Check multiple set points. If oven temperature does not respond to changes in set point, replace thermostat.	If all recommended possible areas of misadjustment have been checked and the problem persists, **Contact your local Field Service Facility.**
Oven Operates-Temperature Setting "Off".	1. Check thermostat operation.	
Door will not close properly.	1. Use screwdriver to adjust door latch.	

⚠ CAUTION

If for any reason you do not understand the test procedures or are unable to perform the tests/repairs safely, contact your **Local Field Service Facility** for technical troubleshooting assistance before you proceed.

120V Model [K2942-1]

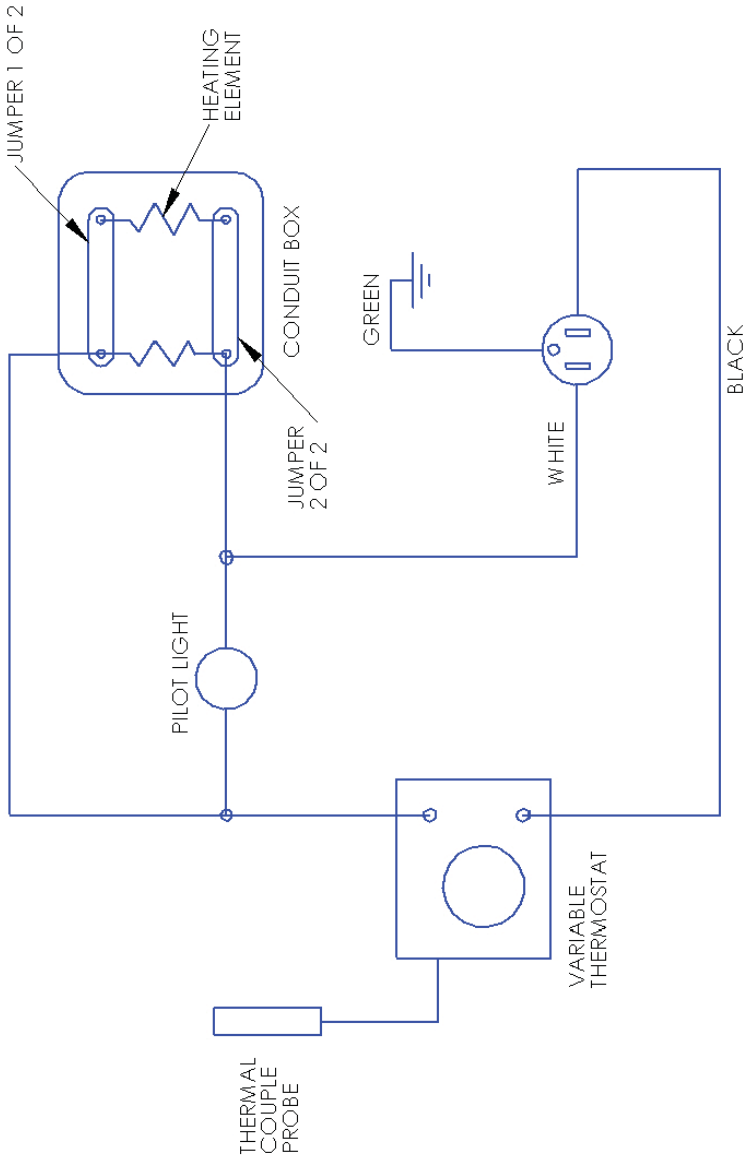

120 VOLT WIRING

NOTE: This diagram is for reference only. It may not be accurate for all machines covered by this manual. The specific diagram for a particular code is pasted inside the machine on one of the enclosure panels. If the diagram is illegible, write to the Service Department for a replacement. Give the equipment code number.

240/480V Model [K2942-2]

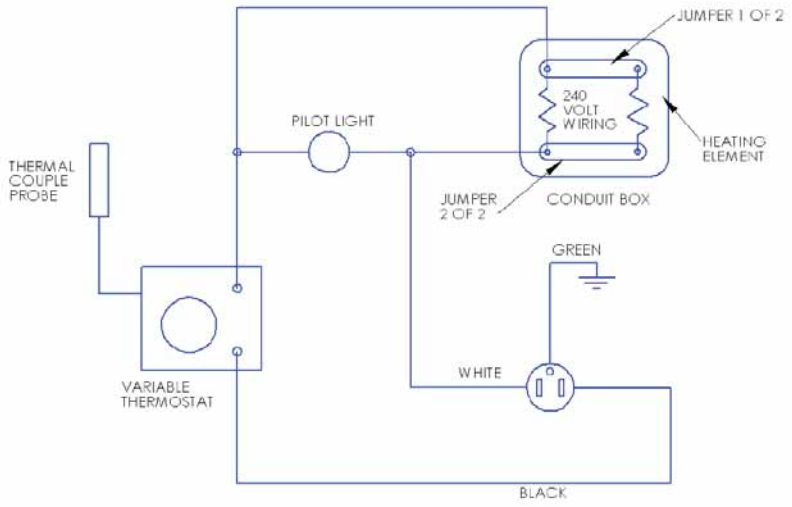

240 VOLT WIRING

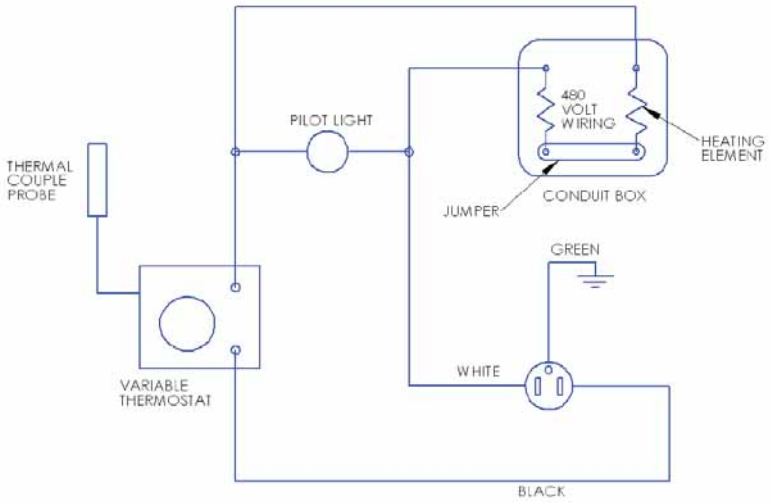

480 VOLT WIRING

NOTE: This diagram is for reference only. It may not be accurate for all machines covered by this manual. The specific diagram for a particular code is pasted inside the machine on one of the enclosure panels. If the diagram is illegible, write to the Service Department for a replacement. Give the equipment code number.

ITEM	PART NO.	ˆQTY.
Thermometer Kit	K3148-1	1
Heating Element Kit (120V)	S28972-1	1
Door Latch/Strike Kit	S28972-2	1
Thermostat Kit (120V)	S28972-3	1
Insulation Block Kit	S28972-4	1
Heating Element Kit (240/480V)	S28972-5	1
Thermostat Kit (240/480V)	S28972-6	1
Thermostat Housing	S28972-7	1
Cord Kit (120V)	S28972-8	1
Cord Kit (240V)	S28972-9	1
Lead Kit	S28972-10	1
Shelf Assembly Kit	S28972-11	1

NOTES

NOTES

NOTES

WARNING	● Do not touch electrically live parts or electrode with skin or wet clothing. ● Insulate yourself from work and ground.	● Keep flammable materials away.	● Wear eye, ear and body protection.
Spanish **AVISO DE PRECAUCION**	● No toque las partes o los electrodos bajo carga con la piel o ropa mojada. ● Aislese del trabajo y de la tierra.	● Mantenga el material combustible fuera del área de trabajo.	● Protéjase los ojos, los oídos y el cuerpo.
French **ATTENTION**	● Ne laissez ni la peau ni des vêtements mouillés entrer en contact avec des pièces sous tension. ● Isolez-vous du travail et de la terre.	● Gardez à l'écart de tout matériel inflammable.	● Protégez vos yeux, vos oreilles et votre corps.
German **WARNUNG**	● Berühren Sie keine stromführenden Teile oder Elektroden mit Ihrem Körper oder feuchter Kleidung! ● Isolieren Sie sich von den Elektroden und dem Erdboden!	● Entfernen Sie brennbarres Material!	● Tragen Sie Augen-, Ohren- und Körperschutz!
Portuguese **ATENÇÃO**	● Não toque partes elétricas e electrodos com a pele ou roupa molhada. ● Isole-se da peça e terra.	● Mantenha inflamáveis bem guardados.	● Use proteção para a vista, ouvido e corpo.
Japanese **注意事項**	● 通電中の電気部品、又は溶材にヒフやぬれた布で触れないこと。 ● 施工物やアースから身体が絶縁されている様にして下さい。	● 燃えやすいものの側での溶接作業は絶対にしてはなりません。	● 目、耳及び身体に保護具をして下さい。
Chinese **警 告**	● 皮肤或濕衣物切勿接觸帶電部件及銲條。 ● 使你自己與地面和工件絶緣。	● 把一切易燃物品移離工作場所。	● 佩戴眼、耳及身體勞動保護用具。
Korean **위 험**	● 전도체나 용접봉을 젖은 헝겁 또는 피부로 절대 접촉치 마십시요. ● 모재와 접지를 접촉치 마십시요.	● 인화성 물질을 접근 시키지 마시요.	● 눈, 귀와 몸에 보호장구를 착용하십시요.
Arabic **تحذير**	● لا تلمس الاجزاء التي يسري فيها التيار الكهربائي أو الالكترود بجلد الجسم أو بالملابس المبللة بالماء. ● ضع عازلا على جسمك خلال العمل.	● ضع المواد القابلة للاشتعال في مكان بعيد.	● ضع أدوات وملابس واقية على عينيك وأذنيك وجسمك.

READ AND UNDERSTAND THE MANUFACTURER'S INSTRUCTION FOR THIS EQUIPMENT AND THE CONSUMABLES TO BE USED AND FOLLOW YOUR EMPLOYER'S SAFETY PRACTICES.

SE RECOMIENDA LEER Y ENTENDER LAS INSTRUCCIONES DEL FABRICANTE PARA EL USO DE ESTE EQUIPO Y LOS CONSUMIBLES QUE VA A UTILIZAR, SIGA LAS MEDIDAS DE SEGURIDAD DE SU SUPERVISOR.

LISEZ ET COMPRENEZ LES INSTRUCTIONS DU FABRICANT EN CE QUI REGARDE CET EQUIPMENT ET LES PRODUITS A ETRE EMPLOYES ET SUIVEZ LES PROCEDURES DE SECURITE DE VOTRE EMPLOYEUR.

LESEN SIE UND BEFOLGEN SIE DIE BETRIEBSANLEITUNG DER ANLAGE UND DEN ELEKTRODENEINSATZ DES HERSTELLERS. DIE UNFALLVERHÜTUNGSVORSCHRIFTEN DES ARBEITGEBERS SIND EBENFALLS ZU BEACHTEN.

● Keep your head out of fumes. ● Use ventilation or exhaust to remove fumes from breathing zone.	● Turn power off before servicing.	● Do not operate with panel open or guards off.	**WARNING**
● Los humos fuera de la zona de respiración. ● Mantenga la cabeza fuera de los humos. Utilice ventilación o aspiración para gases.	● Desconectar el cable de alimentación de poder de la máquina antes de iniciar cualquier servicio.	● No operar con panel abierto o guardas quitadas.	Spanish **AVISO DE PRECAUCION**
● Gardez la tête à l'écart des fumées. ● Utilisez un ventilateur ou un aspirateur pour ôter les fumées des zones de travail.	● Débranchez le courant avant l'entretien.	● N'opérez pas avec les panneaux ouverts ou avec les dispositifs de protection enlevés.	French **ATTENTION**
● Vermeiden Sie das Einatmen von Schweibrauch! ● Sorgen Sie für gute Be- und Entlüftung des Arbeitsplatzes!	● Strom vor Wartungsarbeiten abschalten! (Netzstrom völlig öffnen; Maschine anhalten!)	● Anlage nie ohne Schutzgehäuse oder Innenschutzverkleidung in Betrieb setzen!	German **WARNUNG**
● Mantenha seu rosto da fumaça. ● Use ventilação e exhaustão para remover fumo da zona respiratória.	● Não opere com as tampas removidas. ● Desligue a corrente antes de fazer serviço. ● Não toque as partes elétricas nuas.	● Mantenha-se afastado das partes moventes. ● Não opere com os paineis abertos ou guardas removidas.	Portuguese **ATENÇÃO**
● ヒュームから頭を離すようにして下さい。 ● 換気や排煙に十分留意して下さい。	● メンテナンス・サービスに取りかかる際には、まず電源スイッチを必ず切って下さい。	● パネルやカバーを取り外したままで機械操作をしないで下さい。	Japanese **注意事項**
● 頭部遠離煙霧。 ● 在呼吸區使用通風或排風器除煙。	● 維修前切斷電源。	● 儀表板打開或沒有安全罩時不準作業。	Chinese **警 告**
● 얼굴로부터 용접가스를 멀리하십시요. ● 호흡지역으로부터 용접가스를 제거하기 위해 가스제거기나 통풍기를 사용하십시요.	● 보수전에 전원을 차단하십시요.	● 판넬이 열린 상태로 작동치 마십시요.	Korean **위 험**
● ابعد رأسك بعيداً عن الدخان. ● استعمل التهوية أو جهاز ضغط الدخان للخارج لكي تبعد الدخان عن المنطقة التي تتنفس فيها.	● اقطع التيار الكهربائي قبل القيام بأية صيانة.	● لا تشغل هذا الجهاز اذا كانت الاغطية الحديدية الواقية ليست عليه.	Arabic **تحذير**

LEIA E COMPREENDA AS INSTRUÇÕES DO FABRICANTE PARA ESTE EQUIPAMENTO E AS PARTES DE USO, E SIGA AS PRÁTICAS DE SEGURANÇA DO EMPREGADOR.

使う機械や溶材のメーカーの指示書をよく読み、まず理解して下さい。そして貴社の安全規定に従って下さい。

請詳細閱讀並理解製造廠提供的説明以及應該使用的銀捍材料，並請遵守貴方的有関勞動保護規定。

이 제품에 동봉된 작업지침서를 숙지하시고 귀사의 작업자 안전수칙을 준수하시기 바랍니다.

اقرأ بتمعن وافهم تعليمات المصنع المنتج لهذه المعدات والمواد قبل استعمالها واتبع تعليمات الوقاية لصاحب العمل.

• World's Leader in Welding and Cutting Products •
• Sales and Service through Subsidiaries and Distributors Worldwide •
Cleveland, Ohio 44117-1199 U.S.A. TEL: 216.481.8100 FAX: 216.486.1751 WEB SITE: www.lincolnelectric.com