Operator's Manual

Power MIG® 260

For use with machines having Code Numbers:
12728, 12931, 13326

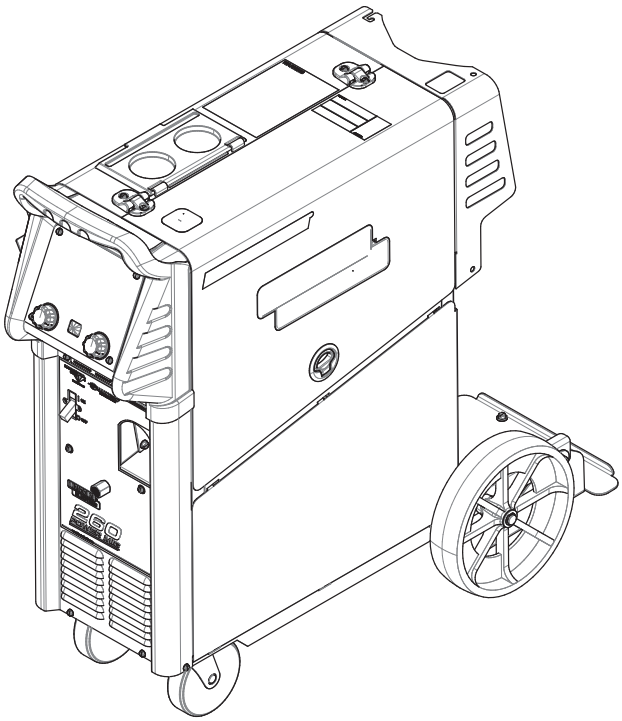

PRODUCT REGISTRATION

Registering your product only takes a few minutes, ensures your qualification for available warranties and allows you to receive updates and information on your product.

Follow the QR code below to register.

https://lered.info/product_registration-8

Need Help? Call 1.888.935.3877
to talk to a Service Representative

Hours of Operation:
8:00 AM to 6:00 PM (ET) Mon. thru Fri.

After hours?
Use "Ask the Experts" at lincolnelectric.com
A Lincoln Service Representative will contact you no later than the following business day.

For Service outside the USA:
Email: globalservice@lincolnelectric.com

GENUINE LINCOLN PARTS™

Register your machine:
https://lered.info/locator

Authorized Service and Distributor Locator:
www.lincolnelectric.com/locator

Save for future reference

IM10464-B | Issue Date May - 22

© Lincoln Global, Inc. All Rights Reserved.

THE LINCOLN ELECTRIC COMPANY
22801 St. Clair Avenue • Cleveland, OH • 44117-1199 • U.S.A.
Phone: +1.216.481.8100 • www.lincolnelectric.com

THANK YOU FOR SELECTING A QUALITY PRODUCT BY LINCOLN ELECTRIC.

PLEASE EXAMINE CARTON AND EQUIPMENT FOR DAMAGE IMMEDIATELY

When this equipment is shipped, title passes to the purchaser upon receipt by the carrier. Consequently, claims for material damaged in shipment must be made by the purchaser against the transportation company at the time the shipment is received.

SAFETY DEPENDS ON YOU

Lincoln arc welding and cutting equipment is designed and built with safety in mind. However, your overall safety can be increased by proper installation ... and thoughtful operation on your part. **DO NOT INSTALL, OPERATE OR REPAIR THIS EQUIPMENT WITHOUT READING THIS MANUAL AND THE SAFETY PRECAUTIONS CONTAINED THROUGHOUT.** And, most importantly, think before you act and be careful.

⚠ WARNING

This statement appears where the information must be followed exactly to avoid serious personal injury or loss of life.

⚠ CAUTION

This statement appears where the information must be followed to avoid minor personal injury or damage to this equipment.

KEEP YOUR HEAD OUT OF THE FUMES.

DON'T get too close to the arc. Use corrective lenses if necessary to stay a reasonable distance away from the arc.

READ and obey the Safety Data Sheet (SDS) and the warning label that appears on all containers of welding materials.

USE ENOUGH VENTILATION or exhaust at the arc, or both, to keep the fumes and gases from your breathing zone and the general area.

IN A LARGE ROOM OR OUTDOORS, natural ventilation may be adequate if you keep your head out of the fumes (See below).

USE NATURAL DRAFTS or fans to keep the fumes away from your face.

If you develop unusual symptoms, see your supervisor. Perhaps the welding atmosphere and ventilation system should be checked.

WEAR CORRECT EYE, EAR & BODY PROTECTION

PROTECT your eyes and face with welding helmet properly fitted and with proper grade of filter plate (See ANSI Z49.1).

PROTECT your body from welding spatter and arc flash with protective clothing including woolen clothing, flame-proof apron and gloves, leather leggings, and high boots.

PROTECT others from splatter, flash, and glare with protective screens or barriers.

IN SOME AREAS, protection from noise may be appropriate.

BE SURE protective equipment is in good condition.

Also, wear safety glasses in work area **AT ALL TIMES.**

SPECIAL SITUATIONS

DO NOT WELD OR CUT containers or materials which previously had been in contact with hazardous substances unless they are properly cleaned. This is extremely dangerous.

DO NOT WELD OR CUT painted or plated parts unless special precautions with ventilation have been taken. They can release highly toxic fumes or gases.

Additional precautionary measures

PROTECT compressed gas cylinders from excessive heat, mechanical shocks, and arcs; fasten cylinders so they cannot fall.

BE SURE cylinders are never grounded or part of an electrical circuit.

REMOVE all potential fire hazards from welding area.

ALWAYS HAVE FIRE FIGHTING EQUIPMENT READY FOR IMMEDIATE USE AND KNOW HOW TO USE IT.

SECTION A: WARNINGS

CALIFORNIA PROPOSITION 65 WARNINGS

WARNING: Breathing diesel engine exhaust exposes you to chemicals known to the State of California to cause cancer and birth defects, or other reproductive harm.

- Always start and operate the engine in a well-ventilated area.
- If in an exposed area, vent the exhaust to the outside.
- Do not modify or tamper with the exhaust system.
- Do not idle the engine except as necessary.

For more information go to www.P65 warnings.ca.gov/diesel

WARNING: This product, when used for welding or cutting, produces fumes or gases which contain chemicals known to the State of California to cause birth defects and, in some cases, cancer. (California Health & Safety Code § 25249.5 *et seq.)*

WARNING: Cancer and Reproductive Harm www.P65warnings.ca.gov

ARC WELDING CAN BE HAZARDOUS. PROTECT YOURSELF AND OTHERS FROM POSSIBLE SERIOUS INJURY OR DEATH. KEEP CHILDREN AWAY. PACEMAKER WEARERS SHOULD CONSULT WITH THEIR DOCTOR BEFORE OPERATING.

Read and understand the following safety highlights. For additional safety information, it is strongly recommended that you purchase a copy of "Safety in Welding & Cutting - ANSI Standard Z49.1" from the American Welding Society, P.O. Box 351040, Miami, Florida 33135 or CSA Standard W117.2. A Free copy of "Arc Welding Safety" booklet E205 is available from the Lincoln Electric Company, 22801 St. Clair Avenue, Cleveland, Ohio 44117-1199.

BE SURE THAT ALL INSTALLATION, OPERATION, MAINTENANCE AND REPAIR PROCEDURES ARE PERFORMED ONLY BY QUALIFIED INDIVIDUALS.

FOR ENGINE POWERED EQUIPMENT.

1.a. Turn the engine off before troubleshooting and maintenance work unless the maintenance work requires it to be running.

1.b. Operate engines in open, well-ventilated areas or vent the engine exhaust fumes outdoors.

1.c. Do not add the fuel near an open flame welding arc or when the engine is running. Stop the engine and allow it to cool before refueling to prevent spilled fuel from vaporizing on contact with hot engine parts and igniting. Do not spill fuel when filling tank. If fuel is spilled, wipe it up and do not start engine until fumes have been eliminated.

1.d. Keep all equipment safety guards, covers and devices in position and in good repair. Keep hands, hair, clothing and tools away from V-belts, gears, fans and all other moving parts when starting, operating or repairing equipment.

1.e. In some cases it may be necessary to remove safety guards to perform required maintenance. Remove guards only when necessary and replace them when the maintenance requiring their removal is complete. Always use the greatest care when working near moving parts.

1.f. Do not put your hands near the engine fan. Do not attempt to override the governor or idler by pushing on the throttle control rods while the engine is running.

1.g. To prevent accidentally starting gasoline engines while turning the engine or welding generator during maintenance work, disconnect the spark plug wires, distributor cap or magneto wire as appropriate.

1.h. To avoid scalding, do not remove the radiator pressure cap when the engine is hot.

1.i. Using a generator indoors CAN KILL YOU IN MINUTES.

1.j. Generator exhaust contains carbon monoxide. This is a poison you cannot see or smell.

1.k. NEVER use inside a home or garage, EVEN IF doors and windows are open.

1.l. Only use OUTSIDE and far away from windows, doors and vents.

1.m. Avoid other generator hazards. READ MANUAL BEFORE USE.

ELECTRIC AND MAGNETIC FIELDS MAY BE DANGEROUS

2.a. Electric current flowing through any conductor causes localized Electric and Magnetic Fields (EMF). Welding current creates EMF fields around welding cables and welding machines

2.b. EMF fields may interfere with some pacemakers, and welders having a pacemaker should consult their physician before welding.

2.c. Exposure to EMF fields in welding may have other health effects which are now not known.

2.d. All welders should use the following procedures in order to minimize exposure to EMF fields from the welding circuit:

2.d.1. Route the electrode and work cables together - Secure them with tape when possible.

2.d.2. Never coil the electrode lead around your body.

2.d.3. Do not place your body between the electrode and work cables. If the electrode cable is on your right side, the work cable should also be on your right side.

2.d.4. Connect the work cable to the workpiece as close as possible to the area being welded.

2.d.5. Do not work next to welding power source.

ELECTRIC SHOCK CAN KILL.

3.a. The electrode and work (or ground) circuits are electrically “hot” when the welder is on. Do not touch these “hot” parts with your bare skin or wet clothing. Wear dry, hole-free gloves to insulate hands.

3.b. Insulate yourself from work and ground using dry insulation. Make certain the insulation is large enough to cover your full area of physical contact with work and ground.

In addition to the normal safety precautions, if welding must be performed under electrically hazardous conditions (in damp locations or while wearing wet clothing; on metal structures such as floors, gratings or scaffolds; when in cramped positions such as sitting, kneeling or lying, if there is a high risk of unavoidable or accidental contact with the workpiece or ground) use the following equipment:

- Semiautomatic DC Constant Voltage (Wire) Welder.
- DC Manual (Stick) Welder.
- AC Welder with Reduced Voltage Control.

3.c. In semiautomatic or automatic wire welding, the electrode, electrode reel, welding head, nozzle or semiautomatic welding gun are also electrically “hot”.

3.d. Always be sure the work cable makes a good electrical connection with the metal being welded. The connection should be as close as possible to the area being welded.

3.e. Ground the work or metal to be welded to a good electrical (earth) ground.

3.f. Maintain the electrode holder, work clamp, welding cable and welding machine in good, safe operating condition. Replace damaged insulation.

3.g. Never dip the electrode in water for cooling.

3.h. Never simultaneously touch electrically “hot” parts of electrode holders connected to two welders because voltage between the two can be the total of the open circuit voltage of both welders.

3.i. When working above floor level, use a safety belt to protect yourself from a fall should you get a shock.

3.j. Also see Items 6.c. and 8.

ARC RAYS CAN BURN.

4.a. Use a shield with the proper filter and cover plates to protect your eyes from sparks and the rays of the arc when welding or observing open arc welding. Headshield and filter lens should conform to ANSI Z87. I standards.

4.b. Use suitable clothing made from durable flame-resistant material to protect your skin and that of your helpers from the arc rays.

4.c. Protect other nearby personnel with suitable, non-flammable screening and/or warn them not to watch the arc nor expose themselves to the arc rays or to hot spatter or metal.

FUMES AND GASES CAN BE DANGEROUS.

5.a. Welding may produce fumes and gases hazardous to health. Avoid breathing these fumes and gases. When welding, keep your head out of the fume. Use enough ventilation and/or exhaust at the arc to keep fumes and gases away from the breathing zone. **When welding hardfacing (see instructions on container or SDS) or on lead or cadmium plated steel and other metals or coatings which produce highly toxic fumes, keep exposure as low as possible and within applicable OSHA PEL and ACGIH TLV limits using local exhaust or mechanical ventilation unless exposure assessments indicate otherwise. In confined spaces or in some circumstances, outdoors, a respirator may also be required. Additional precautions are also required when welding on galvanized steel.**

5. b. The operation of welding fume control equipment is affected by various factors including proper use and positioning of the equipment, maintenance of the equipment and the specific welding procedure and application involved. Worker exposure level should be checked upon installation and periodically thereafter to be certain it is within applicable OSHA PEL and ACGIH TLV limits.

5.c. Do not weld in locations near chlorinated hydrocarbon vapors coming from degreasing, cleaning or spraying operations. The heat and rays of the arc can react with solvent vapors to form phosgene, a highly toxic gas, and other irritating products.

5.d. Shielding gases used for arc welding can displace air and cause injury or death. Always use enough ventilation, especially in confined areas, to insure breathing air is safe.

5.e. Read and understand the manufacturer’s instructions for this equipment and the consumables to be used, including the Safety Data Sheet (SDS) and follow your employer’s safety practices. SDS forms are available from your welding distributor or from the manufacturer.

5.f. Also see item 1.b.

WELDING AND CUTTING SPARKS CAN CAUSE FIRE OR EXPLOSION.

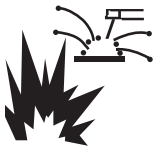

6.a. Remove fire hazards from the welding area. If this is not possible, cover them to prevent the welding sparks from starting a fire. Remember that welding sparks and hot materials from welding can easily go through small cracks and openings to adjacent areas. Avoid welding near hydraulic lines. Have a fire extinguisher readily available.

6.b. Where compressed gases are to be used at the job site, special precautions should be used to prevent hazardous situations. Refer to “Safety in Welding and Cutting” (ANSI Standard Z49.1) and the operating information for the equipment being used.

6.c. When not welding, make certain no part of the electrode circuit is touching the work or ground. Accidental contact can cause overheating and create a fire hazard.

6.d. Do not heat, cut or weld tanks, drums or containers until the proper steps have been taken to insure that such procedures will not cause flammable or toxic vapors from substances inside. They can cause an explosion even though they have been “cleaned”. For information, purchase “Recommended Safe Practices for the Preparation for Welding and Cutting of Containers and Piping That Have Held Hazardous Substances”, AWS F4.1 from the American Welding Society (see address above).

6.e. Vent hollow castings or containers before heating, cutting or welding. They may explode.

6.f. Sparks and spatter are thrown from the welding arc. Wear oil free protective garments such as leather gloves, heavy shirt, cuffless trousers, high shoes and a cap over your hair. Wear ear plugs when welding out of position or in confined places. Always wear safety glasses with side shields when in a welding area.

6.g. Connect the work cable to the work as close to the welding area as practical. Work cables connected to the building framework or other locations away from the welding area increase the possibility of the welding current passing through lifting chains, crane cables or other alternate circuits. This can create fire hazards or overheat lifting chains or cables until they fail.

6.h. Also see item 1.c.

6.I. Read and follow NFPA 51B “Standard for Fire Prevention During Welding, Cutting and Other Hot Work”, available from NFPA, 1 Batterymarch Park, PO box 9101, Quincy, MA 022690-9101.

6.j. Do not use a welding power source for pipe thawing.

CYLINDER MAY EXPLODE IF DAMAGED.

7.a. Use only compressed gas cylinders containing the correct shielding gas for the process used and properly operating regulators designed for the gas and pressure used. All hoses, fittings, etc. should be suitable for the application and maintained in good condition.

7.b. Always keep cylinders in an upright position securely chained to an undercarriage or fixed support.

7.c. Cylinders should be located:

- Away from areas where they may be struck or subjected to physical damage.
- A safe distance from arc welding or cutting operations and any other source of heat, sparks, or flame.

7.d. Never allow the electrode, electrode holder or any other electrically “hot” parts to touch a cylinder.

7.e. Keep your head and face away from the cylinder valve outlet when opening the cylinder valve.

7.f. Valve protection caps should always be in place and hand tight except when the cylinder is in use or connected for use.

7.g. Read and follow the instructions on compressed gas cylinders, associated equipment, and CGA publication P-I, “Precautions for Safe Handling of Compressed Gases in Cylinders,” available from the Compressed Gas Association, 14501 George Carter Way Chantilly, VA 20151.

FOR ELECTRICALLY POWERED EQUIPMENT.

8.a. Turn off input power using the disconnect switch at the fuse box before working on the equipment.

8.b. Install equipment in accordance with the U.S. National Electrical Code, all local codes and the manufacturer’s recommendations.

8.c. Ground the equipment in accordance with the U.S. National Electrical Code and the manufacturer’s recommendations.

Refer to http://www.lincolnelectric.com/safety for additional safety information.

PRÉCAUTIONS DE SÛRETÉ

Pour votre propre protection lire et observer toutes les instructions et les précautions de sûreté specifiques qui parraissent dans ce manuel aussi bien que les précautions de sûreté générales suivantes:

Sûreté Pour Soudage A L'Arc

1. **Protegez-vous contre la secousse électrique:**

   a. **Les circuits à l'électrode et à la piéce sont sous tension quand la machine à souder est en marche. Eviter toujours tout contact entre les parties sous tension et la peau nue ou les vétements mouillés. Porter des gants secs et sans trous pour isoler les mains.**
   b. **Faire trés attention de bien s'isoler de la masse quand on soude dans des endroits humides, ou sur un plancher metallique ou des grilles metalliques, principalement dans les positions assis ou couché pour lesquelles une grande partie du corps peut être en contact avec la masse.**
   c. **Maintenir le porte-électrode, la pince de masse, le câble de soudage et la machine à souder en bon et sûr état defonctionnement.**
   d. **Ne jamais plonger le porte-électrode dans l'eau pour le refroidir.**
   e. **Ne jamais toucher simultanément les parties sous tension des porte-électrodes connectés à deux machines à souder parce que la tension entre les deux pinces peut être le total de la tension à vide des deux machines.**
   f. **Si on utilise la machine à souder comme une source de courant pour soudage semi-automatique, ces precautions pour le porte-électrode s'applicuent aussi au pistolet de soudage.**

2. **Dans le cas de travail au dessus du niveau du sol, se protéger contre les chutes dans le cas ou on recoit un choc. Ne jamais enrouler le câble-électrode autour de n'importe quelle partie du corps.**

3. **Un coup d'arc peut être plus sévère qu'un coup de soliel, donc:**

   a. **Utiliser un bon masque avec un verre filtrant approprié ainsi qu'un verre blanc afin de se protéger les yeux du rayonnement de l'arc et des projections quand on soude ou quand on regarde l'arc.**
   b. **Porter des vêtements convenables afin de protéger la peau de soudeur et des aides contre le rayonnement de l'arc.**
   c. **Protéger l'autre personnel travaillant à proximité au soudage à l'aide d'écrans appropriés et non-inflammables.**

4. **Des gouttes de laitier en fusion sont émises de l'arc de soudage. Se protéger avec des vêtements de protection libres de l'huile, tels que les gants en cuir, chemise épaisse, pantalons sans revers, et chaussures montantes.**

5. **Toujours porter des lunettes de sécurité dans la zone de soudage. Utiliser des lunettes avec écrans lateraux dans les zones où l'on pique le laitier.**

6. **Eloigner les matériaux inflammables ou les recouvrir afin de prévenir tout risque d'incendie dû aux étincelles.**

7. **Quand on ne soude pas, poser la pince à une endroit isolé de la masse. Un court-circuit accidental peut provoquer un échauffement et un risque d'incendie.**

8. **S'assurer que la masse est connectée le plus prés possible de la zone de travail qu'il est pratique de le faire. Si on place la masse sur la charpente de la construction ou d'autres endroits éloignés de la zone de travail, on augmente le risque de voir passer le courant de soudage par les chaines de levage, câbles de grue, ou autres circuits. Cela peut provoquer des risques d'incendie ou d'echauffement des chaines et des câbles jusqu'à ce qu'ils se rompent.**

9. **Assurer une ventilation suffisante dans la zone de soudage. Ceci est particuliérement important pour le soudage de tôles galvanisées plombées, ou cadmiées ou tout autre métal qui produit des fumeés toxiques.**

10. **Ne pas souder en présence de vapeurs de chlore provenant d'opérations de dégraissage, nettoyage ou pistolage. La chaleur ou les rayons de l'arc peuvent réagir avec les vapeurs du solvant pour produire du phosgéne (gas fortement toxique) ou autres produits irritants.**

11. **Pour obtenir de plus amples renseignements sur la sûreté, voir le code "Code for safety in welding and cutting" CSA Standard W 117.2-1974.**

PRÉCAUTIONS DE SÛRETÉ POUR LES MACHINES À SOUDER À TRANSFORMATEUR ET À REDRESSEUR

1. **Relier à la terre le chassis du poste conformement au code de l'électricité et aux recommendations du fabricant. Le dispositif de montage ou la piece à souder doit être branché à une bonne mise à la terre.**

2. **Autant que possible, l'installation et l'entretien du poste seront effectués par un électricien qualifié.**

3. **Avant de faires des travaux à l'interieur de poste, la debrancher à l'interrupteur à la boite de fusibles.**

4. **Garder tous les couvercles et dispositifs de sûreté à leur place.**

INSTALLATION ..... SECTION A
TECHNICAL SPECIFICATIONS A-1
UNCRATING A-2
PRODUCT DESCRIPTION A-2
LOCATION A-2
TILTING A-2
OUTPUT POLARITY CONNECTIONS A-2
INPUT POWER, GROUNDING AND CONNECTION DIAGRAM A-2
GUN AND CABLE INSTALLATION A-2
SHIELDING GAS A-2
AUXILIARY POWER RECEPTACLES A-2

OPERATION ..... SECTION B
RECOMMENDED PROCESSES AND EQUIPMENT B-1
WELDING CAPABILITY B-1
LIMITATIONS B-1
GRAPHIC SYMBOLS USED IN THIS MANUAL B-1
CASE FRONT CONTROLS B-2
CASE BACK CONTROLS B-2
INTERNAL CONTROLS B-3
WIRE SIZE CONVERSION PARTS B-4
PROCEDURE FOR CHANGING DRIVE AND IDLE ROLL SETS B-4
WIRE REEL LOADING - READI REELS, SPOOLS OR COILS B-4
TO START THE WELDER B-5
FEEDING WIRE ELECTRODE B-5
IDLE ROLL PRESSURE SETTING B-5
WIRE DRIVE CONFIGURATION B-6
DISPLAY OPERATION: B-7
MAKING A WELD B-9
AVOIDING WIRE FEEDING PROBLEMS B-9
FAN CONTROL B-9
INPUT LINE VOLTAGE PROTECTION B-9
WIRE FEED OVERLOAD PROTECTION B-9
WELDING THERMAL OVERLOAD PROTECTION B-9
OVERCURRENT PROTECTION B-9

OPTIONS / ACCESSORIES ..... SECTION C
DRIVE ROLL KITS C-1
ALTERNATIVE MAGNUM GMAW GUN AND CABLE ASSEMBLIES C-1
MAGNUM GUN CONNECTION KIT (OPTIONAL K466-6) C-1
SPOOL GUN C-1
CONNECTING THE SPOOL GUN TO THE POWER MIG® 260 ..... C-2
MAKING A WELD WITH THE SPOOL GUN C-2
MAKING A WELD WITH THE MAGNUM SG SPOOL GUN C-3
CONNECTING THE PUSH-PULL GUN C-3
WELDING WITH THE PUSH-PULL GUN C-3
PUSH-PULL CALIBRATION C-3

MAINTENANCE ..... SECTION D
GENERAL MAINTENANCE D-1
DRIVE ROLLS AND GUIDE PLATES D-1
CONTACT TIP AND GAS NOZZLE INSTALLATION D-1
GUN TUBES AND NOZZLES D-1
GUN CABLE CLEANING D-1
LINER REMOVAL AND REPLACEMENT D-1
LINER REMOVAL, INSTALLATION AND TRIMMING INSTRUCTIONS FOR MAGNUM® PRO 250L D-1
GUN HANDLE DISASSEMBLY D-2

TROUBLESHOOTING ..... SECTION E

DIAGRAMS ..... SECTION G

PARTS LIST ..... PARTS.LINCOLNELECTRIC.COM

CONTENT/DETAILS MAY BE CHANGED OR UPDATED WITHOUT NOTICE. FOR MOST CURRENT INSTRUCTION MANUALS, GO TO PARTS.LINCOLNELECTRIC.COM

TECHNICAL SPECIFICATIONS – POWER MIG® 260

INPUT – SINGLE PHASE ONLY		
Standard Voltage/Phase/Frequency	**Input Current @ 200 Amp Rated Output**	**Input Current @ 250 Amp Rated Output**
208/230/460/575/1/60 Hz	50/46/23/19 Amps	56/53/27/22 Amps

RATED OUTPUT		
Duty Cycle	**Amps**	**Volts at Rated Amperes**
40%	250 Amps	26.5 Volts
60%	200 Amps	24 Volts
100%	145 Amps	21.5 Volts

OUTPUT*		
Welding Current Range (Continuous)	**Maximum Open Circuit Voltage**	**Welding Voltage Range**
30 – 300 Amps	40 Volts	10-28 Volts

RECOMMENDED INPUT WIRE AND FUSE SIZES			
Input Voltage Frequency (Hz)	**Fuse or Breaker Size (Super Lag)**	**Input Ampere Rating On Nameplate**	**Type S, SO, ST, STO or extra hard usage input cord AWG (IEC) Sizes**
208/60	60	59A	8
230/60	60	55A	10
460/60	30	27A	14
575/60	25	21A	14

WIRE SPEED RANGE	
Wire Speed	**50 – 700 IPM (1.27 – 17.8 m/minute)**

PHYSICAL DIMENSIONS			
Height	**Width**	**Depth**	**Weight**
37.25 in. 946.15 mm	19.15 in. 486 mm	40.4 in. 1026 mm	247 Lbs 112 kgs

TEMPERATURE RANGES	
OPERATING TEMPERATURE RANGE -4°F to 104°F(-20°C to +40°C)	**STORAGE TEMPERATURE RANGE** -40°F to 185°F(-40°C to +85°C)

*** With 115V receptacle loaded to 15A.**

INSTALLATION

Read entire installation section before starting installation.

Safety Precautions

⚠ WARNING

ELECTRIC SHOCK can kill.

- **Only qualified personnel should perform this installation.**
- **Only personnel that have read and understood the POWER MIG® 260 Operator's Manual should install and operate this equipment.**
- **Machine must be grounded per any national, local or other applicable electrical codes.**
- **The POWER MIG® 260 power switch is to be in the OFF position when installing work cable and gun and when connecting other equipment.**

UNCRATING THE POWER MIG® 260

Cut banding and lift off cardboard carton. Cut banding holding the machine to the skid. Remove foam and corrugated packing material. Untape accessories from Gas Bottle Platform. Unscrew the two wood screws (at the Gas Bottle Platform) holding the machine to the skid. Roll the machine off the skid assembly.

PRODUCT DESCRIPTION

The POWER MIG® 260 is a complete semiautomatic constant voltage DC arc welding machine built to meet NEMA specifications. It combines a constant voltage power source and a constant speed wire feeder with a microcomputer-based controller to form a reliable high performance welding system. A simple control scheme, consisting of continuous full range voltage and wire feed speed controls, provides versatility with ease of use and accuracy. The POWER MIG® 260 is Spool and Push Pull Gun ready and includes a second Gas Solenoid for spool gun use. Refer to Accessories Section for applicable push pull and spool guns.

Other features include a 7" Digital User Interface with synergic controls and memory capability, a 2" (51 mm) O.D. wire reel spindle with adjustable brake, an integral gas cylinder mounting under carriage, an adjustable CO_2 or Argon blend flow regulator with cylinder pressure gauge and inlet hose, a 15 ft (4.6 m) Magnum® PRO 250L GMAW gun and cable, a 10ft. (3.1 m) power cable with NEMA R Type 6-50N three prong plug and a 10 ft (3.1 m) work cable with clamp.

The POWER MIG® 260 features built in timer functions that provide variable burnback control, a spot function, a selectable 4-step trigger interlock and adjustable "Run-In" for wire starting optimization. ARCFX™ technology comes standard and provides a way to graphically communicate instant feedback of how the end user settings affect the weld outcome when adjusting wire feed speed and voltage.

LOCATION

Locate the welder in a dry location where there is free circulation of clean air into the louvers in the back and the louvers out the front. A location that minimizes the amount of smoke and dirt drawn into the rear louvers reduces the chance of dirt accumulation that can block air passages and cause overheating.

TILTING

Each machine must be placed on a secure, level surface, either directly or on a recommended cart. The machine may topple over if this precaution is not followed.

OUTPUT POLARITY CONNECTIONS

The welder, as shipped from the factory, is connected for electrode positive (+) polarity. This is the normal polarity for GMAW.

If negative (–) polarity is required, interchange the connection of the two cables located in the wire drive compartment near the front panel. The electrode cable, which is attached to the wire drive, is to be connected to the negative (–) labeled terminal and the work lead, which is attached to the work clamp, is to be connected to the positive (+) labeled terminal.

INPUT POWER, GROUNDING AND CONNECTION DIAGRAM

⚠ WARNING

ELECTRIC SHOCK can kill.

- **Do not touch electrically live parts such as output terminals or internal wiring.**
- **All input power must be electrically disconnected before proceeding.**

The Power MIG 260 is not equipped with 460/575 volt 60 Hz plug, an input cable or a receptacle.

1. Before starting the installation, check with the local power company if there is any question about whether your power supply is adequate for the voltage, amperes, phase, and frequency specified on the welder rating plate. Also be sure the planned installation will meet the U.S. National Electrical Code and local code requirements. This welder may be operated from a single phase line or from one phase of a two or three phase line.
2. Power MIG 260 has multiple input voltages specified on the nameplate. The unit is shipped connected for the 230 voltage. If the welder is to be operated on 208 voltage, it must be reconnected according to the instructions in Figure A.1. For higher voltage (460 & 575) reconnect per Figure A.1. Install appropriate input cable per local and national electrical code.

⚠ WARNING

Make certain that the input power is electrically disconnected before removing the screw on the reconnect panel access cover.

FIGURE A.1

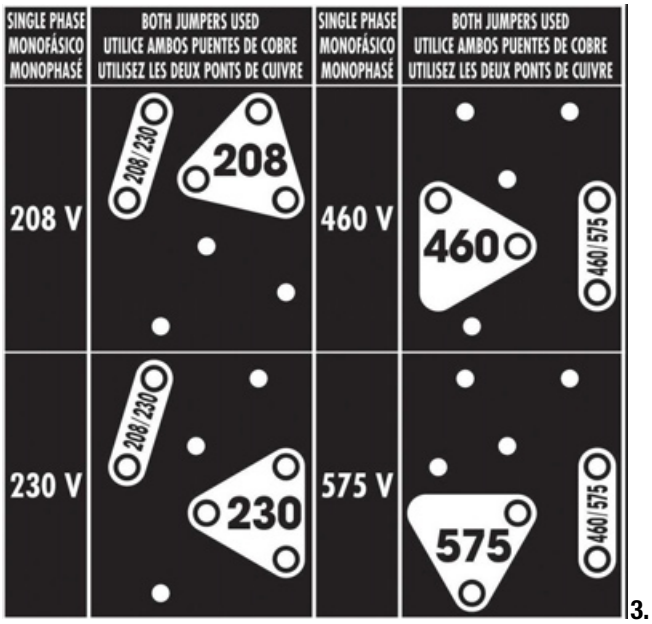

3.

3. The POWER MIG 260 is shipped with a 10 ft. NEMA R Type 6-50N three prong plug and cable connected to the welder. Obtain a receptacle and mount it in a suitable location. Be sure it can be reached by the plug on the input cable attached to the welder. Mount with the grounding terminal at the top to allow the power cable to hang down without bending.

GUN AND CABLE INSTALLATION

The Magnum® PRO 250L gun and cable provided with the POWER MIG® 260 is factory installed with a liner for .035-.045" (0.9-1.1 mm) electrode and an .035" (0.9 mm) contact tip. Install the .045” tip (also provided) if this wire size is being used.

⚠ WARNING

Turn the welder power switch off before installing gun and cable.

(See Figure A.4)

1. Lay the cable out straight.
2. Unscrew the Hand Screw on the drive unit front end (inside wire feed compartment - Item 3) until tip of screw no longer protrudes into Gun Adapter opening as seen from front of machine. (See Figure A.4)
3. Insert the male end of gun cable into the Gun Adapter (Item 2) through the opening in front panel. Make sure connector is fully inserted and tighten Hand Screw.
4. Connect the Gun Trigger Connector from the gun and cable to the mating Receptacle inside the compartment located left on the Front Panel - Item 1. Make sure that the keyways are aligned, insert and tighten retaining ring.

FIGURE A.4

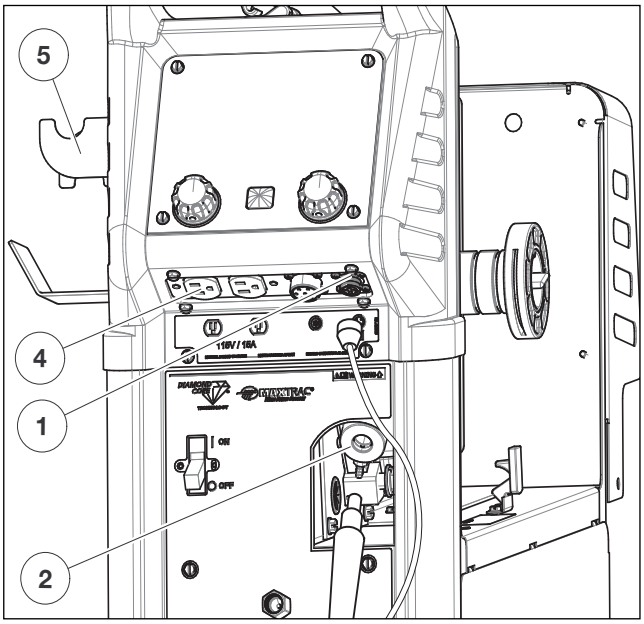

FIGURE A.5

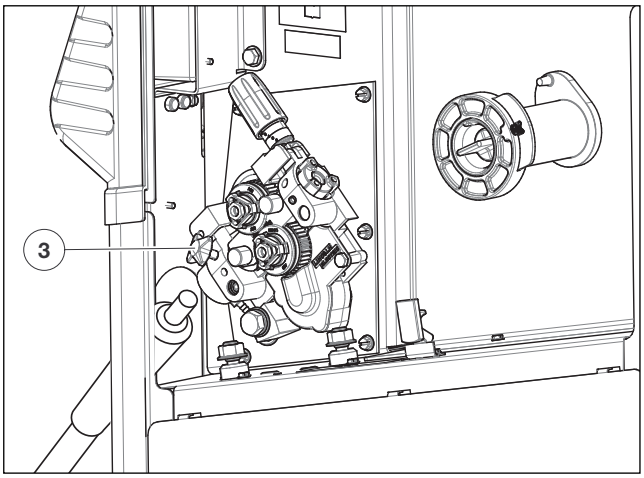

A Coil Claw™ [Fig A.4 (Item 5)] and tool holder are included with Power MIG 260. To remove/reposition the tool holder, remove the screw and insert. Reposition into desired slot on the gas bottle upper bracket (G9040).

SHIELDING GAS

[For Gas Metal Arc Welding(GMAW) Processes]

Customer must provide cylinder of appropriate type shielding gas for the process being used.

A gas flow regulator, for Argon blend gas, an inlet gas hose, and a regulator adapter are factory provided with the POWER MIG® 260. When using 100% CO_2, the regulator adapter will be required to connect the regulator to the gas bottle.

⚠ WARNING

CYLINDER may explode if damaged.

- **Gas under pressure is explosive. Always keep gas cylinders in an upright position and always keep chained to undercarriage or stationary support.**

See American National Standard Z49.1, "Safety in Welding and Cutting" published by the American Welding Society.

Install shielding gas supply as follows:

1. Set gas cylinder on rear platform of POWER MIG® 260. Hook chain in place to secure cylinder to rear of welder.
2. Remove the cylinder cap. Inspect the cylinder valves and regulator for damaged threads, dirt, dust, oil or grease. Remove dust and dirt with a clean cloth.

   DO NOT ATTACH THE REGULATOR IF OIL, GREASE OR DAMAGE IS PRESENT! Inform your gas supplier of this condition. Oil or grease in the presence of high pressure oxygen is explosive.
3. Stand to one side away from the outlet and open the cylinder valve for an instant. This blows away any dust or dirt which may have accumulated in the valve outlet.

⚠ WARNING

Be sure to keep your face away from the valve outlet when "cracking" the valve.

4. Attach the flow regulator to the cylinder valve and tighten the union nut(s) securely with a wrench.

   NOTE: If connecting to 100% CO_2 cylinder, the regulator adapter provided must be installed between the regulator and cylinder valve.
5. Attach one end of the inlet gas hose to the outlet fitting of the flow regulator, the other end to the POWER MIG® 260 rear fitting marked "Feeder" and tighten the union nuts securely with a wrench.
6. Before opening the cylinder valve, turn the regulator adjusting knob counterclockwise until the adjusting spring pressure is released.
7. Standing to one side, open the cylinder valve slowly a fraction of a turn. When the cylinder pressure gauge pointer stops moving, open the valve fully.

⚠ WARNING

Never stand directly in front of or behind the flow regulator when opening the cylinder valve. Always stand to one side.

8. The flow regulator is adjustable. Adjust it to the flow rate recommended for the procedure and process being used before making the weld.

AUXILIARY POWER RECEPTACLES

This machine is equipped with 15Amp 120V receptacle with 15Amp Circuit Breaker. The receptacle is UL and CSA approved. The location can be seen in Fig A.4 (Item 4).

OPERATION

SAFETY PRECAUTIONS

Read this entire section of operating instructions before operating the machine.

⚠ WARNING

ELECTRIC SHOCK can kill.

- **Do not touch electrically live parts or electrode with skin or wet clothing. Insulate yourself from work and ground.**
- **Always wear dry insulating gloves.**

FUMES AND GASES can be dangerous.

- **Keep your head out of fumes.**
- **Use ventilation or exhaust to remove fumes from breathing zone.**

WELDING SPARKS can cause fire or explosion.

- **Keep flammable material away.**
- **Do not weld on containers that have held combustibles.**

ARC RAYS can burn.

- **Wear eye, ear, and body protection.**

RECOMMENDED PROCESSES AND EQUIPMENT

The POWER MIG® 260 is recommended for GMAW welding processes using 10 to 44 lb (4.5 to 20 kg) 2"(51 mm) I.D. spools or Readi-Reel® coils (with optional adapter) of .025" through .045" (0.6 – 1.1 mm) solid steel, .035" (0.9 mm) stainless, 3/64" (1.2 mm) aluminum and .045" (1.1 mm) Outershield® and Ultracore® ; as well as .035" (0.9 mm) and .045" (1.1 mm) Innershield® self-shielding electrodes.

The POWER MIG® 260 is factory equipped to feed .035" (0.9 mm) and .045” (1.1mm) electrode. It also includes a 200A, 60% duty cycle (or 250A, 40% duty cycle) rated, 15 ft. (4.6 m) GMAW gun and cable assembly equipped for these wire sizes. Use of GMAW processes requires a supply of shielding gas.

WELDING CAPABILITY

The POWER MIG® 260 is rated at 250 amps @ 26 volts, at a 40% duty cycle based on a ten minute cycle time. It is capable of higher duty cycles at lower output currents and capable of up to 300 Amps at lower duty cycles.

LIMITATIONS

POWER MIG® 260 WILL NOT operate satisfactorily if powered with a portable or in-plant generating system.

GRAPHIC SYMBOLS USED IN THIS MANUAL

CASE FRONT CONTROLS

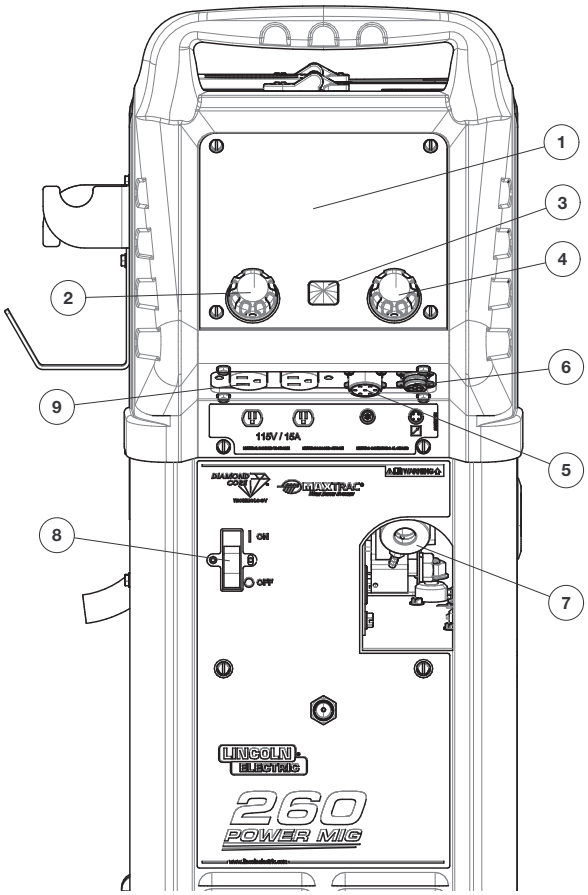

1. **Color LED Screen** – Permits visualization of welding process and parameters. The screen features a replaceable screen shield for protecting against dust & dirt.
2. **Back Button/Knob** --- rotate adjusts value, push to move back to previous selection
3. **Home Button** – Returns the user to the Home Screen. At the Home Screen, the user can select a welding process or the display settings can be configured.
4. **Select Button/Knob** --- rotate adjusts value, push confirms the selected value or choice
5. **Seven Pin Connector -** For attaching optional remote control equipment. Includes auto-sensing remote control circuit.
6. **Four Pin Trigger Receptacle** – Permits triggering the machine for MIG/FCAW or aluminum MIG. Connect the 4-pin connector present on the welding gun to the receptacle.
7. **Gun Connection** – Permits attachment of a MIG welding gun. Ensure the gun is fully seated into the brass receptacle.
8. **Power Switch** – Permits turning the machine on or off.
9. **115V receptacle**

CASE BACK CONTROLS

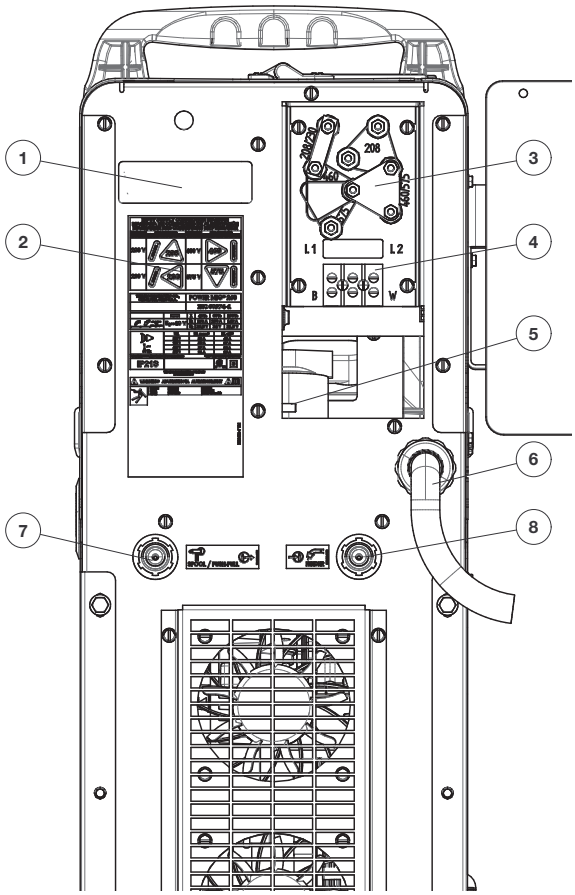

1. **Decal** – serial number.
2. **Decal** – Input supply connection diagram
3. **Reconnect Panel Assembly**
4. **Input Cable Connecting Block**
5. **Grounding** – Input cable ground cable connector
6. **Input power cord**
7. **Spool Gun Bypass Gas Solenoid**
8. **MIG/Push-Pull Gas Solenoid Connector** – connection to gas hose

INTERNAL CONTROLS

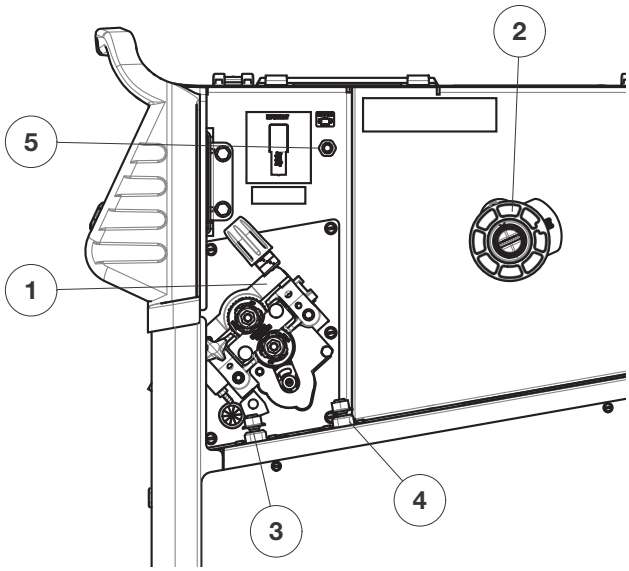

1. **Wire Drive Tension Pressure Adjustment** – Permits increasing or decreasing the pressure applied to the top drive roll.
2. **Wire Drive Spindle** – Supports a 4-inch or 8-inch spool of wire. The center wing-nut can be adjusted to increase tension on the wire.
3. **Positive Output Receptacle** – Permits attaching a work lead or the center wire drive polarity lead to DC positive polarity. Rotate clockwise to lock into place.
4. **Negative Output Receptacle** – Permits attaching a work lead or the center wire drive polarity lead to DC negative polarity. Rotate connector clockwise to lock into place.
5. **Thermal Breaker** – The Power MIG 260 features a resettable 15 amp thermal breaker. If the current conducted through the breaker exceeds 15 amps for an extended period of time, the breaker will open and require manual reset.

The drive rolls installed with the POWER MIG® 260 have two grooves one for .035” (0.9mm) wire Solid Steel electrode and the other for .045” (1.1mm) wire. Drive roll size is stenciled on each side of the drive roll. If feeding problems occur, check to make sure that the wire size and the drive roll size matches. See "Procedure for Changing Drive Roll" in this section. This information also appears on the Procedure Decal on the door inside the wire compartment.

WIRE SIZE CONVERSION PARTS

The drive roll kits and Magnum® PRO 250L gun and cable parts are available to feed different sizes and types of electrodes. See Accessories section.

PROCEDURE FOR CHANGING DRIVE AND IDLE ROLL SETS

1. Turn off the power source.
2. Release the pressure on the idle roll by swinging the adjustable pressure arm down toward the back of the machine. Lift the cast idle roll assembly and allow it to sit in an upright position.
3. Remove the outside wire guide retaining plate by loosening the two large knurled screws.
4. Twist the drive roll retaining mechanism to the unlocked position as shown below and remove the drive roll. (See Figure B.2)

FIGURE B.2

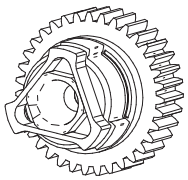

UNLOCKED POSITION

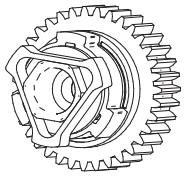

LOCKED POSITION

5. Remove the inside wire guide plate.
6. Replace the drive and idle rolls and inside wire guide with a set marked for the new wire size. NOTE: Be sure that the gun liner and contact tip are also sized to match the selected wire size.
7. Manually feed the wire from the wire reel, over the drive roll groove and through the wire guide and then into the brass bushing of the gun and cable assembly.
8. Replace the outside wire guide retaining plate by tightening the two large knurled screws. Reposition the adjustable pressure arm to its original position to apply pressure. Adjust pressure as necessary.

WIRE REEL LOADING - READI REELS, SPOOLS OR COILS

To Mount a 30 Lb. (14 kg) Readi-Reel Package (Using the Molded Plastic K363P Readi-Reel Adapter:)

(See Figure B.3)

FIGURE B.3

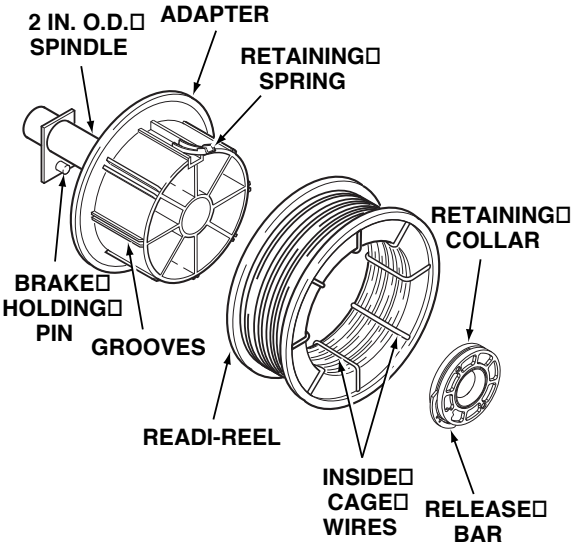

1. Open the Wire Drive Compartment Door.
2. Depress the Release Bar on the Retaining Collar and remove it from the spindle.
3. Place the Optional Adapter on the spindle.
4. Re-install the Retaining Collar. Make sure that the Release Bar "pops up" and that the collar retainers fully engage the retaining ring groove on the spindle.
5. Rotate the spindle and adapter so the retaining spring is at the 12 o'clock position.
6. Position the Readi-Reel so that it will rotate in a direction when feeding so as to be de- reeled from top of the coil.
7. Set one of the Readi-Reel inside cage wires on the slot in the retaining spring tab.
8. Lower the Readi-Reel to depress the retaining spring and align the other inside cage wires with the grooves in the molded adapter.
9. Slide cage all the way onto the adapter until the retaining spring "pops up" fully.

⚠ CAUTION

CHECK TO BE SURE THE RETAINING SPRING HAS FULLY RETURNED TO THE LOCKING POSITION AND HAS SECURELY LOCKED THE READI-REEL CAGE IN PLACE. RETAINING SPRING MUST REST ON THE CAGE, NOT THE WELDING ELECTRODE.

10. To remove Readi-Reel from Adapter, depress retaining spring tab with thumb while pulling the Readi-Reel cage from the molded adapter with both hands. Do not remove adapter from spindle.

To Mount 10 to 44 Lb. (4.5-20 kg) Spools (12"/300 mm Diameter) or 14Lb.(6 Kg) Innershield Coils:

(For 13-14 lb. (6 Kg) Innershield coils, a K435 Coil Adapter must be used).

(For 10 lb.(4.5 Kg) 8 inch(203mm) diameter spools, a K468 spindle adapter must be used).

1. Open the Wire Drive Compartment Door.
2. Depress the Release Bar on the Retaining Collar and remove it from the spindle.
3. Place the spool on the spindle making certain the spindle brake pin enters one of the holes in the back side of the spool (Note: an arrow mark on the spindle lines up with the brake holding pin to assist in lining up a hole). Be certain the wire comes off the reel in a direction so as to de-reel from the top of the coil.
4. Re-install the Retaining Collar. Make sure that the Release Bar "pops up" and that the collar retainers fully engage the retaining ring groove on the spindle.

TO START THE WELDER

Turn the "Power Switch" switch to "ON". This lights the red LED display lights. With the desired voltage and wire speed selected, operate the gun trigger for welder output and to energize the wire feed motor.

FEEDING WIRE ELECTRODE

⚠ WARNING

When triggering, the electrode and drive mechanism are electrically "hot" relative to work and ground and remain "hot" several seconds after the gun trigger is released.

NOTE: Check that drive rolls, guide plates and gun parts are proper for the wire size and type being used. Refer to Table C.1 in Accessories section.

1. Turn the Readi-Reel or spool until the free end of the electrode is accessible.
2. While securely holding the electrode, cut off the bent end and straighten the first six inches. (If the electrode is not properly straightened, it may not feed properly through the wire drive system).
3. Release the pressure on the idle roll by swinging the adjustable pressure arm down toward the back of the machine. Lift the cast idle roll assembly and allow it to sit in an upright position. Leave the outer wire guide plate installed. Manually feed the wire through the incoming guide bushing and through the guide plates (over the drive roll groove). Push a sufficient wire length to assure that the wire has fed into the gun and cable assembly without restriction. Reposition the adjustable pressure arm to its original position to apply pressure to the wire.
4. Press gun trigger to feed the electrode wire through the gun.

IDLE ROLL PRESSURE SETTING

⚠ WARNING

ELECTRIC SHOCK can kill.

- **Turn the input power OFF at the welding power source before installation or changing drive rolls and/or guides.**
- **Do not touch electrically live parts.**
- **When inching with the gun trigger, electrode and drive mechanism are "hot" to work and ground and could remain energized several seconds after the gun trigger is released.**
- **Only qualified personnel should perform maintenance work.**

The pressure arm controls the amount of force the drive rolls exert on the wire. Proper adjustment of both pressure arm gives the best welding performance. For best results, set both pressure arms to the same value.

Set the pressure arm as follows (See Figure B.4):

Aluminum wires between 1 and 3
Cored wires between 3 and 4
Steel, Stainless wires between 4 and 6

FIGURE B.4

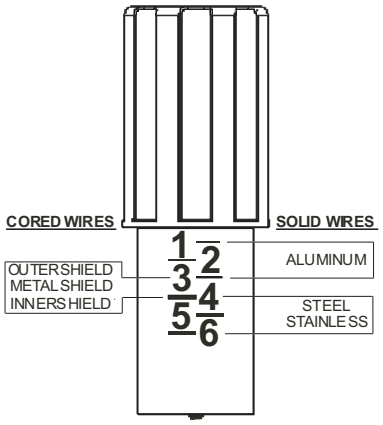

WIRE DRIVE CONFIGURATION

(See Figure B.5)

CHANGING THE GUN RECEIVER BUSHING

Tools required:

- 1/4" hex key wrench.

Note: Some gun bushings do not require the use of the thumb screw.

1. Turn power off at the welding power source.
2. Remove the welding wire from the wire drive.
3. Remove the thumb screw from the wire drive.
4. Remove the welding gun from the wire drive.
5. Loosen the socket head cap screw that holds the connector bar against the gun bushing.

   Important: Do not attempt to completely remove the socket head cap screw.
6. Remove the outer wire guide, and push the gun bushing out of the wire drive. Because of the precision fit, light tapping may be required to remove the gun bushing.
7. Disconnect the shielding gas hose from the gun bushing, if required.
8. Connect the shielding gas hose to the new gun bushing, if required.
9. Rotate the gun bushing until the thumb screw hole aligns with the thumb screw hole in the feed plate. Slide the gun receiver bushing into the wire drive and verify the thumb screw holes are aligned.
10. Tighten the socket head cap screw.
11. Insert the welding gun into the gun bushing and tighten the thumb screw.

Figure B.5

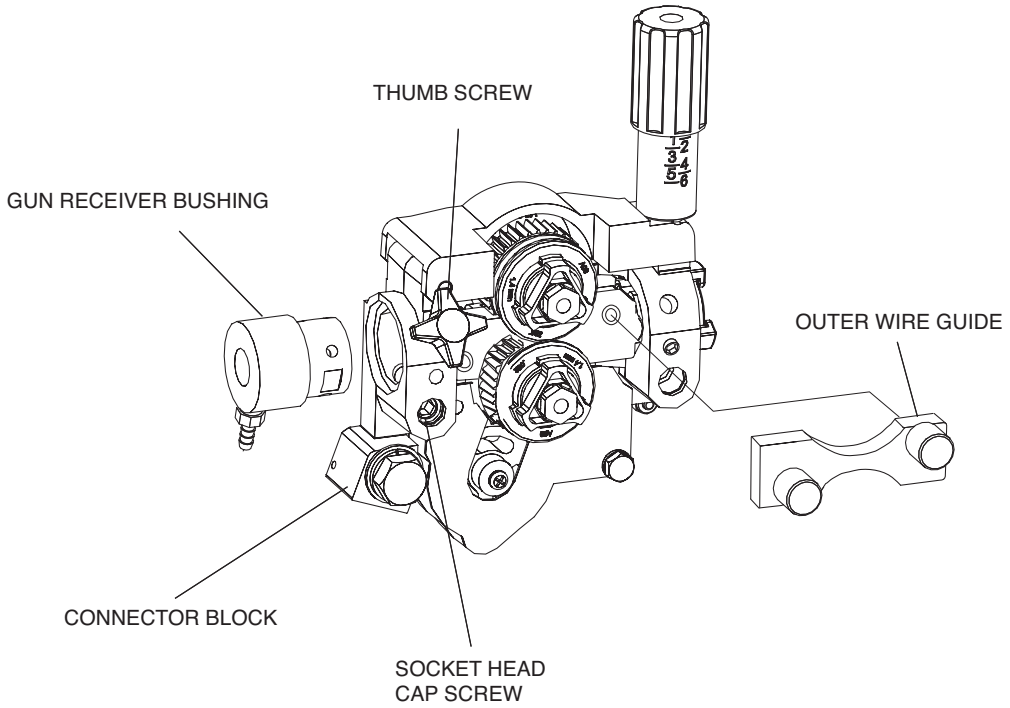

DISPLAY OPERATION:

FIG B.2 - 7” STARTUP SCREEN

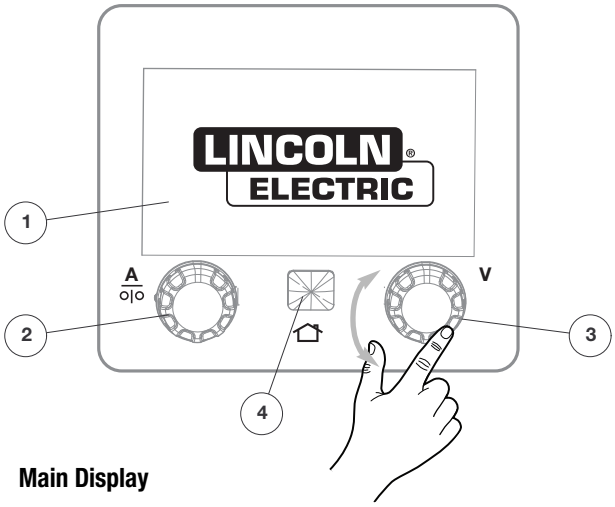

1. **Main Display**
2. **Back Button/Knob** --- rotate adjust value, push to move back to previous selection
3. **Select Button/Knob** --- rotate adjusts value, push confirms the selected value or choice
4. **Home/Mode Button** --- brings up the home screen

FIG B.3 - HOME SCREEN

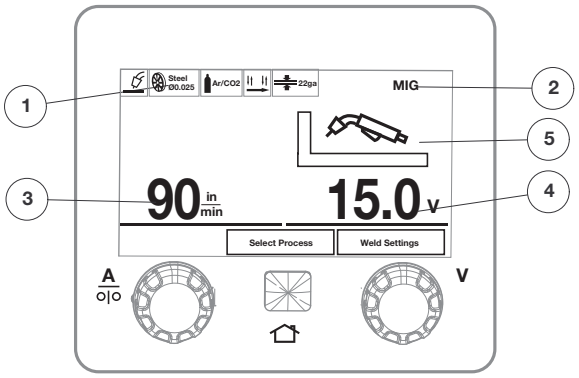

1. **Current Settings Tool Bar** --- It displays the weld settings used
2. **Selected Welding Mode Type** --- It gives a description of the currently selected function/welding mode
3. **Wire Feed Speed**
4. **Voltage**
5. **ARCFX**™ --- provides a way to graphically communicate instant feedback of how the end user settings affect the weld outcome when adjusting wire feed speed and voltage.

FIG B.4 - WELDING SCREEN

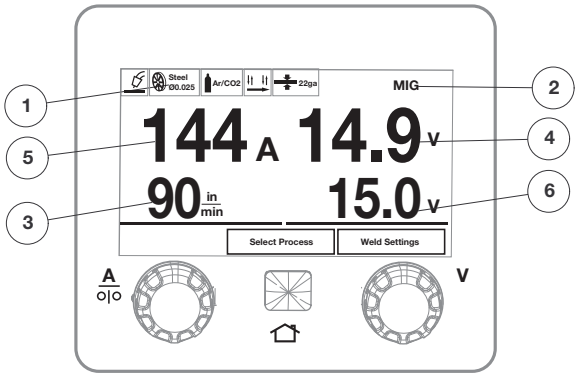

1. **Current Settings Tool Bar** --- It displays the weld settings used
2. **Selected Welding Mode Type** --- It gives a description of the currently selected function/welding mode
3. **Setup Wire Feed Speed**
4. **Actual Voltage**
5. **Actual Current**
6. **Setup Voltage**

FIG B.5 - SELECT MODE SCREEN

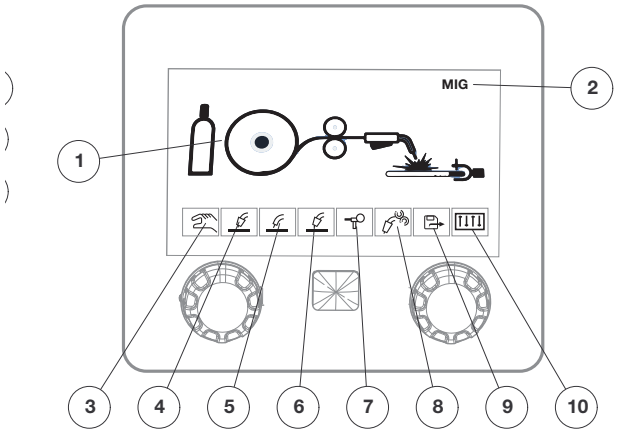

1. **Welding Mode Setup Diagram** --- The diagram shows the major component settings needed to perform a weld. The synergic software will take the user through the necessary steps for a proper welding parameter setup.
2. **Selected Welding Mode Type** --- It gives a description of the currently selected function/welding mode
3. **Manual Mode** --- The synergic mode is disengaged. All welding parameters have to be selected/set by user.
4. **GMAW Mode** --- metal inert gas (MIG) welding
5. **FCAW-S Mode** --- flux cored arc welding - self shielded
6. **FCAW-G Mode** --- flux cored arc welding - gas shielded
7. **Spool Mode** --- spool welding guns mode
8. **Push-Pull Mode** --- Push-pull guns mode
9. **Memory Recall** --- It allows the recall of prior weld settings saved under the Memory Save function
10. **Configuration** --- Select to open the System Settings menu

FIG B.6 - ADVANCE OPTIONS SCREEN

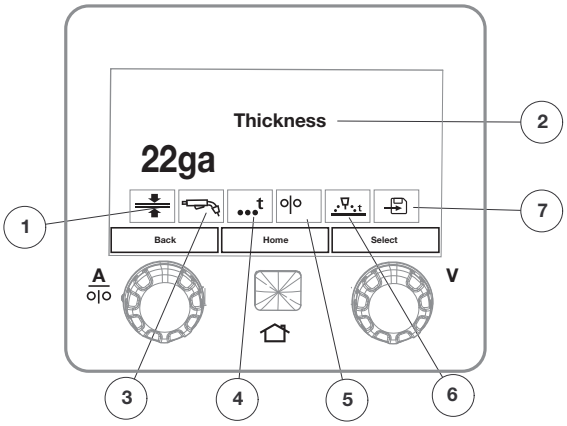

1. **Material Thickness** --- Select welding material thickness
2. **Selected Function Name**
3. **Trigger** ---Select the desired mode with the toggle switch:
   - Normal Welding mode (2 Step) provides weld power only while the trigger switch is depressed.
   - 4-Step Trigger interlock mode eliminates the need to hold the gun trigger while welding. It operates in 4 steps:

   1. Close trigger and establish welding arc.
   2. Release trigger and continue welding.
   3. Reclose trigger near end of weld.
   4. Release trigger again to stop welding.

   If the arc is broken while using this feature, the machine will reset to the "trigger off" condition automatically.
   Note: 4 Step Trigger interlock mode does not function with a Spool Gun.
4. **Spot Time** ---The spot time option permits adjusting the duration of the welding arc. This is used for tack welds or spot welds. The spot-time option is available in GMAW and FCAW modes.
5. **Run-In** --- The run-in option permits adjusting the wire feed speed prior to the arc being established. A lower run-in speed permits smooth arc starts. After the arc is established the run-in value is inactive and the set wire feed speed is present. The run-in option is available in GMAW and FCAW modes.
6. **Burnback** --- Setting the Burnback means setting the adjustable time delay between turning off the wire feeding and turning off the arc. Burnback helps to prevent wire sticking to the puddle. The Burnback feature will allow current to continue to flow for a specified time period at the end of a weld after wire feeding has stopped.
7. **Memory Save** --- Power MIG™ 260 is capable of storing up to 25 sets of welding setting. To save a desired weld setting, select a location, preferable an empty slot (Note: The latest saving will override any prior saved settings), push and hold the right knob for 3 seconds. The saved welding settings can be recalled through the Memory Recall function.

FIG B.6 - SETTING SCREEN

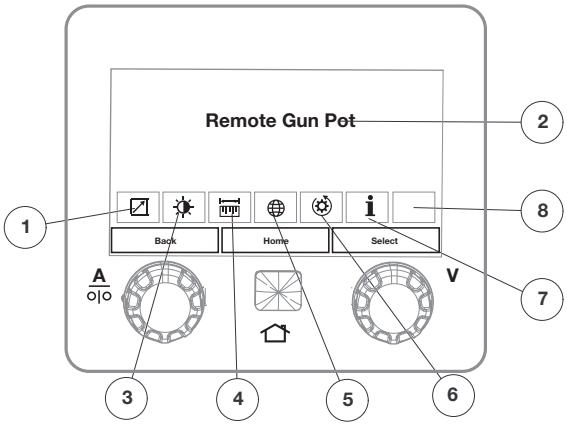

1. **Remote Gun Pot** --- Disable or Enable Remote Gun Pot
2. **Setting Mode ID** --- Selected mode name/identification
3. **Brightness** --- The brightness of the display can be adjusted within the settings option.
4. **Measurement System** --- The units of measure can be chosen by the user. The units can be selected as metric or English. The default units are English.
5. **Language** --- The language of the text present in the user interface software can be modified. The available language options are English, French and Spanish. The default language is English.
6. **Factory Reset** --- The user interface software settings can be reset to the original factory settings.
7. **System Info.** --- Information regarding the software revision of the user interface and the software revision of the inverter board is present in the information section.
8. **Demo Mode** --- Selecting demo mode enables a series of automated transitions through the display screen that will provide the user a visual overview of the user interface and the machine's capabilities. In demo mode the output is disabled. To permit welding, the user must exit demo mode or power cycle the machine.

MAKING A WELD

1. Check that the electrode polarity is correct for the process being used, then turn the power switch ON.
2. Set desired arc voltage and wire speed for the particular electrode wire, material type and thickness, and gas (for GMAW) being used.
3. Select the desired procedure as described in "Description of Controls" Section.
4. Press the trigger to feed the wire electrode through the gun and cable and then cut the electrode within approximately 3/8" (10 mm) of the end of the contact tip [3/4" (20 mm) Outershield®].

NOTE: If set for slow run-in when the trigger is pulled, the wire feeder feeds wire at low speed regardless of the set wire feed speed until the welding arc starts or 1 second has elapsed. This feature enhances starting and makes it easier to set the stickout. The 1 second limit permits high speed loading of the gun and cable. To change run-in mode, see "Run-In Mode" in Description of Controls Section.

5. If welding gas is to be used, turn on the gas supply and set the required flow rate (typically 25-35 CFH; 12-16 liters/min).
6. When using Innershield electrode, the gas nozzle may be removed from the insulation on the end of the gun and replaced with the gasless nozzle. This will give improved visibility and eliminate the possibility of the gas nozzle overheating.
7. Connect work cable to metal to be welded. Work clamp must make good electrical contact to the work. The work must also be grounded as stated in "Arc Welding Safety Precautions".

⚠ WARNING

When using an open arc process, it is necessary to use correct eye, head, and body protection.

8. Position electrode over joint. End of electrode may be lightly touching the work.
9. Lower welding helmet, close gun trigger, and begin welding. Hold the gun so the contact tip to work distance is about 3/8" (10 mm) [3/4" (20 mm) for Outershield].
10. To stop welding, release the gun trigger and then pull the gun away from the work after the arc goes out.
11. When no more welding is to be done, close valve on gas cylinder (if used), momentarily operate gun trigger to release gas pressure, and turn off POWER MIG® 260.

AVOIDING WIRE FEEDING PROBLEMS

Wire feeding problems can be avoided by observing the following gun handling procedures:

- Do not kink or pull cable around sharp corners.
- Keep the gun cable as straight as possible when welding or loading electrode through cable.
- Do not allow dolly wheels or trucks to run over cables.
- Keep cable clean by following maintenance instructions.
- Use only clean, rust-free electrode. The Lincoln electrodes have proper surface lubrication.
- Replace contact tip when the arc starts to become unstable or the contact tip end is fused or deformed.
- Keep wire reel spindle brake tension to minimum required to prevent excess reel over-travel which may cause wire "loop-offs" from coil.
- Use proper drive rolls and wire drive idle roll pressure for wire size and type being used.

FAN CONTROL

The fan is designed to come on automatically when a weld arc is established. The fan will also stay on when the machine's welding and feeding are disabled during thermostatic over temperature protection. (See Welding Thermal Overload Protection)

INPUT LINE VOLTAGE PROTECTION

High Line Voltage — If the line voltage exceeds 110% of rated input voltage, the output will be reduced to the lower level to protect voltage rating of the capacitor bank.

Low Line Voltage — You may not be able to get maximum output from the machine if the line voltage is less than rated input. The unit will continue to weld, but the output may be less than what is set.

WIRE FEED OVERLOAD PROTECTION

The POWER MIG® 260 has solid state overload protection of the wire drive motor. If the motor becomes overloaded, the protection circuitry turns off the wire feed speed weld output and gas solenoid. Check for proper size tip, liner, and drive rolls, for any obstructions or bends in the gun cable, and any other factors that would impede the wire feeding.

To resume welding, simply pull the trigger. There is no circuit breaker to reset, as the protection is done with reliable solid state electronics.

WELDING THERMAL OVERLOAD PROTECTION

The POWER MIG® 260 has built-in protective thermostats that respond to excessive temperature. They open the wire feed and welder output circuits if the machine exceeds the maximum safe operating temperature because of a frequent overload, or high ambient temperature plus overload. The thermostats automatically reset when the temperature reaches a safe operating level and welding and feeding are allowed again, when gun is retriggered.

OVERCURRENT PROTECTION

The machine will automatically reduce the output if the load on the machine exceeds 300 to 320 amperes. This protects the welding machine from excessive short circuit currents and from exceeding their temperature rating before the thermostats can react.

OPTIONS / ACCESSORIES

DRIVE ROLL KITS

Refer to Table C.1 for various drive roll kits that are available for the POWER MIG® 260.The item in Bold is supplied standard with the POWER MIG® 260.

TABLE C.1

Wire	Wire Size	Drive Roll Kit
Solid Steel	.023”-.030” (0.6-0.8 mm)	KP1696-030S
	.035” (0.9 mm)	KP1696-035S
	.045” (1.1 mm)	KP1696-045S
	.035”-.045” (0.9-1.1mm)	KP1696-1
	.040” (1.0mm)	KP1696-2
Cored	.035” (0.9 mm)	KP1697-035C
	.045” (1.1 mm)	KP1697-045C
Aluminum	3/64” (1.2 mm)	KP1695-3/64A
	.035” (0.9 mm)	KP1695-035A

K3675-1 Canvas Cover

K1738-1 Spool Gun Holder for Power MIG - provide neat storage of spool gun cable, and gas hose for Power MIG. Also provide hardware for routing gas inside Power MIG when using a Prince XL gun. (Note: included in K1809-1 and K2310-1)

K468 Spindle Adapter - for 8” (203.2mm) O.D. spool.

K363P READI-REEL™ ADAPTER - The K363P Readi-Reel Adapter mounts to the 2" spindle. It is needed to mount the 22-30 lb. Readi-Reels.

K435 Spindle Adapter for 14 lbs. coils - the K435 spindle adapter allows 14lbs. (6kg.) Innershield coils to be mounted on 2” (51mm) O.D. spindle.

K3676-1 Dual Cylinder

ALTERNATIVE MAGNUM GMAW GUN AND CABLE ASSEMBLIES

The following Magnum® PRO 250L gun and cable assembly is separately available for use with the POWER MIG® 260. Each is rated 200 amps 60% duty cycle (or 250 amps 40% duty) and is equipped with the integrated connector, twist-lock trigger connector, fixed nozzle and insulator, and includes a liner, diffuser, and contact tips for the wire sizes specified:

Length	Part No.	English Wire Size[1]	Metric Wire Size
15' (4.6 m)	K3081-2	.035 – .045"	0.9 – 1.2 mm

[1] Optional liners for different wire diameters are sold separately, see table D.1 Maintenance Section.

20’ and 25’ Magnum® PRO Curve 300 Guns -

K2951-3 Magnum® PRO Curve 300, 20’*

K2951-4 Magnum® PRO Curve 300, 25’*

* Requires K466-6 adapter and KP44-3545-25 liner

MAGNUM GUN CONNECTION KIT (OPTIONAL K466-6)

Using the optional K466-6 Magnum® Connection kit for the POWER MIG permits use of standard Magnum® 200, 300 or 400 gun and cable assemblies.

SPOOL GUN

⚠ WARNING

Remove all input power to the POWER MIG® 260 before proceeding.

The POWER MIG® 260 provides direct connection and use of the Spool Gun (with remote speed control).

It also provides gun trigger switch transfer between the machine’s use with its feeder gun or the spool gun for same polarity welding with different wire and gas processes.

K2490-1 Magnum® 250LX

K487-25 Magnum® SG Spool Gun (requires K2445-1 Cable Adapter)

K2445-1 Magnum® SG Spool gun Control Cable Adapter. Allows the K487-25 Magnum® SG spool gun’s 6-pin control cable plug to connect to the POWER MIG® 260’s 7-pin spool gun control cable receptacle.

CONNECTING THE SPOOL GUN TO THE POWER MIG® 260

(See Figure C.1)

1. Connect the Spool Gun control cable to the mating 7-pin receptacle in the Power MIG wire drive compartment. K487-25 Magnum SG Spool Gun requires K2445-1 cable 7-pin to 6-pin adapter.
2. Connect the Spool Gun electrode lead to the (+)positive stud with the Spool Gun electrode lead sandwiched between the (+)positive power source electrode lead and the (+)positive stud. Tighten and be careful not to strip the threads.
3. Attach the Spool Gun gas line to the 5/8 Gas fitting on the front of the machine.
4. Attach a Gas hose from the Gas supply to the rear inlet gas fitting marked “Spool” on the POWER MIG® 260.

MAKING A WELD WITH THE SPOOL GUN

The POWER MIG® 260 control circuitry is designed to sense either the spool gun or (built in) wire feeder trigger circuitry. The spool gun can easily be plugged in and will be ready to use.

⚠ CAUTION

Closing either gun trigger will cause the electrode of both guns to be electrically "HOT". Be sure unused gun is positioned so electrode or tip will not contact metal case or other metal common to work.

1. Pulling the trigger for the built-in feeder gun:
   - Disables spool gun operation.
   - Closing feeder gun trigger starts feeder gun welding and makes both electrodes electrically "HOT".
2. Pulling SPOOL GUN Trigger:
   - Disables built-in feeder gun operation.
   - Closing spool gun trigger starts spool gun weld-ing and makes both electrodes electrically "HOT".
3. Operation with POWER MIG® 260:
   - Turn the POWER MIG® 260 input power ON.
   - Adjusting the voltage control will increase or decrease your welding voltage.
   - Adjusting the wire speed control on the spool gun will increase or decrease the spool gun wire feed speed. Calibration is available on the procedure menu.
   - To aid in set-up, the POWER MIG® 260 wire feed speed(WFS) meter will display the approximate WFS of the gun. Actual WFS at the gun may vary from the displayed value due to tension setting, liner condition or gun variation.
4. The following procedure settings for Aluminum 4043 can be used as initial settings for making test welds to determine final settings:

Wire Diameter In. (mm)	Wire Feed Speed Display	Arc voltage Setting
.030” (.8mm)	270	15V
.035” (.9mm)	250	16V
3/64” (1.2mm)	240	20V

5. To return to normal POWER MIG® 260 welding, release the spool gun trigger and reset feeder gun voltage procedure setting if necessary.

MAKING A WELD WITH THE MAGNUM® SG SPOOL GUN

The POWER MIG® 260 control circuitry is designed to sense either the spool gun or (built in) wire feeder trigger circuitry. The spool gun can easily be plugged in and will be ready to use.

⚠ CAUTION

Closing either gun trigger will cause the electrode of both guns to be electrically "HOT". Be sure unused gun is positioned so electrode or tip will not contact metal case or other metal common to work.

1. Pulling the trigger for the built-in feeder gun:
   - Disables spool gun operation.
   - Closing feeder gun trigger starts feeder gun welding and makes both electrodes electrically "HOT".
2. Pulling SPOOL GUN Trigger:
   - Disables built-in feeder gun operation.
   - Closing spool gun trigger starts spool gun welding and makes both electrodes electrically "HOT".
3. Operation with POWER MIG® 260:
   - Turn the POWER MIG® 260 input power ON.
   - Adjusting the voltage control will increase or decrease your welding voltage.
   - Adjusting the wire speed control on the spool gun will increase or decrease the spool gun wire feed speed.
4. To return to normal POWER MIG® 260 welding, release the spool gun trigger and reset feeder gun welding procedures.

CONNECTING THE PUSH-PULL GUN

Magnum® PRO Al

Magnum® PRO Pistol

Magnum® PRO Cougar

Custom

See lincolnelectric.com for latest K#

WELDING WITH THE PUSH-PULL GUN

- Set the idle roll pressure on the wire drive between an indicator reading of 0-2. A recommended start point is 1.5.
- Select from the main menu "PUSH-PULL GUN."
- Depending on the weld mode, set the Voltage at the POWER MIG® 260 using the right control knob located on the upper case front panel.
- The Wire Feed Speed (WFS) is set using the control knob on the Torch. The left control knob on the POWER MIG® 260 is inactive. The actual WFS being set at the torch is displayed on the POWER MIG® 260. Note: disables the push-pull gun adjustments.
- All weld parameters normally available for the active weld mode are available during push-pull operation. Refer to the Operation Section of this manual.

PUSH-PULL CALIBRATION

Magnum® PRO AL, Magnum® PRO Pistol and Magnum® PRO Cougar

Auto Calibration: This procedure provides an automatic means to synchronize the speeds of the rear push motor and front pull motor. Before running the auto calibration procedure, make sure the machine and the gun cable are set up and ready for welding. Pull the gun trigger and hold it closed throughout the procedure. Wire will feed out of the gun while the calibration is being performed, however the welding output will NOT be energized. Wire will stop feeding when the calibration is complete. Auto calibration should be performed whenever the wire or gun is changed.

Manual Calibration: this procedure allows a direct adjustment on the pull motor speed by Offset value. The default is 90. A wire nesting or tangling issue can be resolved by increasing this value, and a wire slipping or shaving issue can be resolved by decreasing this value.

Custom push-pull guns

Only Manual calibration is available, its operation is as described above.

MAINTENANCE

Safety Precautions

⚠ WARNING

ELECTRIC SHOCK can kill.

- **Have an electrician install and service this equipment.**
- **Turn the input power OFF at the fuse box before working on equipment**
- **Do not touch electrically hot parts.**

See additional warning information throughout this Operator's Manual

GENERAL MAINTENANCE

In extremely dusty locations, dirt may clog the air passages causing the welder to run hot. Blow dirt out of the welder with low-pressure air at regular intervals to eliminate excessive dirt and dust build-up on internal parts.

The fan motors have sealed ball bearings which require no service.

DRIVE ROLLS AND GUIDE PLATES

After every coil of wire, inspect the wire drive mechanism. Clean it as necessary by blowing with low pressure compressed air. Do not use solvents for cleaning the idle roll because it may wash the lubricant out of the bearing.

All drive rolls are stamped with the wire sizes they will feed. If a wire size other than that stamped on the roll is used, the drive roll must be changed.

For instructions on replacing or changing drive roll, see "Wire Drive Rolls" in Operation section.

CONTACT TIP AND GAS NOZZLE INSTALLATION

1. Choose the correct size contact tip for the electrode being used (wire size is stenciled on the side of the contact tip) and screw it snugly into the gas diffuser.
2. Screw the appropriate fixed gas nozzle fully onto the diffuser. Either the standard .50" (12.7 mm) flush nozzle or other optional flush or recessed (spray arc) nozzle sizes may be used. (Refer to www.lincolnelectric.com)
3. If using optional adjustable slip-on nozzles. (Refer to www.lincolnelectric.com)
   - Be sure the nozzle insulator is fully screwed onto the gun tube and does not block the gas holes in the diffuser.
   - Slip the appropriate gas nozzle onto the nozzle insulator. Either a standard .50" (12.7 mm) or optional .62" (15.9 mm) I.D. slip-on gas nozzle may be used and should be selected based on the welding application.
   - Adjust the gas nozzle as appropriate for the GMAW process to be used. Typically, the contact tip end should be flush to .12" (3.2 mm) extended for the short-circuiting transfer process and .12" (3.2 mm) recessed for spray transfer.

GUN TUBES AND NOZZLES

1. Replace worn contact tips as required.
2. Remove spatter from inside of gas nozzle and from tip after each 10 minutes of arc time or as required.

GUN CABLE CLEANING

To help prevent feeding problems, clean cable liner after using approximately 300 pounds (136 kg) of electrode. Remove the cable from the wire feeder and lay it out straight on the floor. Remove the contact tip from the gun. Using an air hose and only partial pressure, gently blow out the cable liner from the gas diffuser end.

⚠ CAUTION

Excessive pressure at the beginning of the cleaning procedure may cause the dirt to form a plug.

Flex the cable over its entire length and again blow out the cable. Repeat this procedure until no further dirt comes out. If this has been done and feed problems are experienced, try liner replacement, and refer to trouble shooting section on rough wire feeding.

LINER REMOVAL AND REPLACEMENT

NOTE: Changing the liner for a different wire size requires replacement of the gas diffuser per Table D.1 to properly secure the different liner.

Diameter of Electrodes Used	Replacement Liner Part Number	Size Stencilled on End of Liner Bushing
.025"-.030" Steel (0.6-0.8 mm)	KP42-25-15	.030" (0.8 mm)
.035"-.045" Steel (0.9-1.1 mm)	KP42-4045-15	.045" (1.1 mm)
3/64" Aluminum (1.2 mm)	KP42N-3545-15	3/64" (1.2 mm)

LINER REMOVAL, INSTALLATION AND TRIMMING INSTRUCTIONS FOR MAGNUM® PRO 250L

NOTE: The variation in cable lengths prevents the interchangeability of liners between guns. Once a liner has been cut for a particular gun, it should not be installed in another gun unless it can meet the liner cutoff length requirement. Liners are shipped with the jacket of the liner extended the proper amount.

1. Remove the gas nozzle and nozzle insulator, if used, to locate the set screw in the gas diffuser which is used to hold the old liner in place. Loosen the set screw with a 5/64" (2.0 mm) Allen wrench.
2. Remove the gas diffuser from the gun tube.
3. Lay the gun and cable out straight on a flat surface. Loosen the set screw located in the brass connector at the feeder end of the cable and pull the liner out of the cable.
4. Insert a new untrimmed liner into the connector end of the cable. Be sure the liner bushing is stencilled appropriately for the wire size being used.

Note: For liners KP45-3545-15 and KP45-3545-25

Before fully seating the liner bushing, it will be necessary to trim the liner's inner tube flush with the liner bushing using a sharp blade. After trimming, remove any burrs from inner tube and insure that the opening is fully open.

5. Fully seat the liner bushing into the connector. tighten the set screw on the brass cable connector. The gas diffuser, at this time, should not be installed onto the end of the gun tube.
6. With the gas diffuser still removed from the gun tube, be sure the cable is straight, and then trim the liner to the length shown in Figure D.1. Remove any burrs from the end of the liner.
7. Screw the gas diffuser onto the end of the gun tube and securely tighten.
8. Tighten the set screw in the side of the gas diffuser against the cable liner using a 5/64" (2.0 mm) Allen wrench.

FIGURE D.1

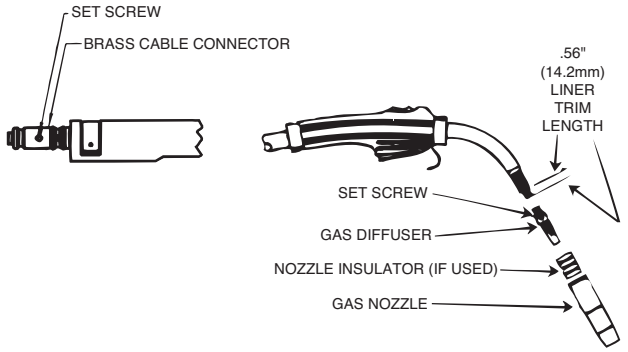

⚠ CAUTION

This screw should only be gently tightened. Overtightening will split or collapse the liner and cause poor wire feeding.

GUN HANDLE DISASSEMBLY

The internal parts of the gun handle may be inspected or serviced if necessary.

The gun handle consists of two halves that are held together with a collar on each end. To open up the handle, turn the collars approximately 60 degrees counterclockwise (the same direction as removing a right hand thread) until the collar reaches a stop. Then pull the collar off the gun handle. If the collars are difficult to turn, position the gun handle against a corner, place a screwdriver against the tab on the collar and give the screwdriver a sharp blow to turn the collar past an internal locking rib.

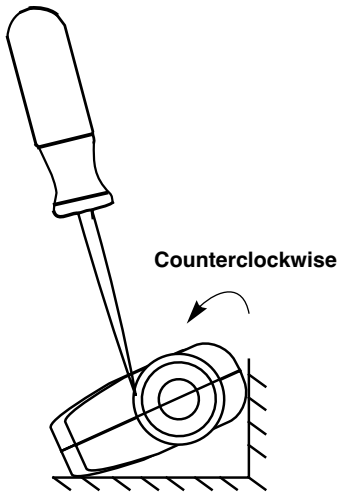

TROUBLESHOOTING

HOW TO USE TROUBLESHOOTING GUIDE

⚠ WARNING

Service and Repair should only be performed by Lincoln Electric Factory Trained Personnel. Unauthorized repairs performed on this equipment may result in danger to the technician and machine operator and will invalidate your factory warranty. For your safety and to avoid Electrical Shock, please observe all safety notes and precautions detailed throughout this manual.

This Troubleshooting Guide is provided to help you locate and repair possible machine malfunctions. Simply follow the three-step procedure listed below.

Step 1. LOCATE PROBLEM (SYMPTOM).

Look under the column labeled “PROBLEM (SYMPTOMS)”. This column describes possible symptoms that the machine may exhibit. Find the listing that best describes the symptom that the machine is exhibiting.

Step 2. POSSIBLE CAUSE.

The second column labeled “POSSIBLE CAUSE” lists the obvious external possibilities that may contribute to the machine symptom.

Step 3. RECOMMENDED COURSE OF ACTION

This column provides a course of action for the Possible Cause, generally it states to contact your local Lincoln Authorized Field Service Facility.

If you do not understand or are unable to perform the Recommended Course of Action safely, contact your local Lincoln Authorized Field Service Facility.

If for any reason you do not understand the test procedures or are unable to perform the tests/repairs safely, contact your Lincoln Authorized Service Facility for technical troubleshooting assistance before you proceed.

WWW.LINCOLNELECTRIC.COM/LOCATOR

Observe all Safety Guidelines detailed throughout this manual

PROBLEMS (SYMPTOMS)	POSSIBLE AREAS OF MISADJUSTMENTS(S)	RECOMMENDED COURSE OF ACTION
OUTPUT PROBLEMS		
Major physical or electrical damage is evident.	Do not plug in machine or turn it on. Contact your local Lincoln Authorized Field Service Facility.	If all recommended possible areas of misadjustment have been checked and the problem persists, Contact your local Lincoln Authorized Field Service Facility.
No wire feed, Weld output or gas flow when gun trigger is pulled. Fans does NOT operate.	1. Make sure correct voltage is applied to the machine.	
	2. Make certain that the power switch is in ON position.	
	3. Make sure circuit breaker is reset.	
No wire feed, Weld output or gas flow when gun trigger is pulled. Fans operate normally.	1. The thermostat may be tripped due to overheating. Let machine cool. Weld at lower duty cycle.	
	2. Check for obstructions in air flow. Check gun trigger connections. See installation section.	
	3. Gun trigger may be faulty.	
Arc is unstable – Poor starting.	1. Check for correct input voltage to machine.	
	2. Check machine reconnect panel is configured properly for the applied voltage.	
	3. Check gun tip for wear or damage and proper size – Replace.	
	4. Check for proper gas and flow rate for process.	
	5. Check work cable or loose or faulty connections.	
	6. Check gun for damage or breaks.	
	7. Check for proper drive roll orientation and alignment.	
	8. Check liner for proper size.	

If for any reason you do not understand the test procedures or are unable to perform the tests/repairs safely, contact your Lincoln Authorized Service Facility for technical troubleshooting assistance before you proceed.

WWW.LINCOLNELECTRIC.COM/LOCATOR

Observe all Safety Guidelines detailed throughout this manual

PROBLEMS (SYMPTOMS)	POSSIBLE AREAS OF MISADJUSTMENTS(S)	RECOMMENDED COURSE OF ACTION
Output voltage and wire feed is present when gun trigger is not pulled (not activated).	1. Remove gun assembly from machine. If problem is solved, gun assembly is faulty. Repair or replace.	If all recommended possible areas of misadjustment have been checked and the problem persists, Contact your local Lincoln Authorized Field Service Facility.
	2. If problem persists when gun assembly is removed from machine, then the problem is within the POWER MIG® 260.	
Machine output is low. Welds are “cold”, weld bead is rounded or bumped up demonstrating poor wetting into plate.	1. Check input voltage. Make sure input voltage matches nameplate rating and reconnect panel configuration.	
	2. Make sure settings for wire feed speed and voltage are correct for the process being used.	
	3. Make sure output polarity is correct for process being used.	
	4. Check welding cables and gun assembly for loose or faulty connections.	
FEEDING PROBLEMS		
No wire feed when gun trigger is pulled. Fans run, gas flows and machine has correct open circuit voltage (38V Max.) – weld output.	1. If the wire drive motor is running, make sure that the correct drive rolls are installed in the machine.	If all recommended possible areas of misadjustment have been checked and the problem persists, Contact your local Lincoln Authorized Field Service Facility.
	2. Check for clogged cable liner or contact tip.	
	3. Check for proper size cable liner and contact tip.	
	4. Check if the spool gun mode is selected on the screen.	
	5. Check wire spindle for ease of rotation and adjust break tension knob if necessary.	

If for any reason you do not understand the test procedures or are unable to perform the tests/repairs safely, contact your Lincoln Authorized Service Facility for technical troubleshooting assistance before you proceed.
WWW.LINCOLNELECTRIC.COM/LOCATOR

Observe all Safety Guidelines detailed throughout this manual

PROBLEMS (SYMPTOMS)	POSSIBLE AREAS OF MISADJUSTMENTS(S)	RECOMMENDED COURSE OF ACTION
The wire feed stops while welding. When trigger is released and pulled again the wire feed starts.	1. Check the wire feed drive rolls and motor for smooth operation.	
	2. Check for restrictions in the wire feed path.	
	3. Make sure gun liner and tip are correct for wire size being used.	
	4. Check spindle for ease of rotation.	
	5. Make sure drive rolls and guide plates are clean and the correct size.	
No control of wire feed speed. Other machine functions are normal.	1. The wire feed speed control may be dirty. Rotate several times and check if problem is resolved.	
GAS FLOW PROBLEMS		
Gas does not flow when gun trigger is pulled.	1. Make sure gas supply is connected properly and turned “ON”.	If all recommended possible areas of misadjustment have been checked and the problem persists, Contact your local Lincoln Authorized Field Service Facility.
	2. If the gas solenoid does not actuate (click) when the gun trigger is pulled, there may be a restriction in the gas supply line.	
	3. The gun cable assembly may be faulty. Check or replace.	
	4. If gas solenoid does not operate when gun trigger is pulled, the problem is within the POWER MIG® 260.	
	5. Make sure the gun is pushed all the way into gun mount and is properly seated.	
SCREEN PROBLEMS		
Error code 213 is displayed on screen	1. Communication between display P.C. board and power control board.	**1. Cycle power to machine.**
ERROR CODE 36, Thermal trip	1. Machine is overloaded	1. Welding duty should not exceed machine rating
	2. Poor airflow	2. Not enough space behind the back of the machine
ERROR CODE 81, Main motor overload	1. Drive rolls don’t match wire size or wire type	1. Check drive rolls
	2. Bad gun liner	2. Try different gun
ERROR 95, Gun motor overload	1. Drive rolls don’t match wire size or wire type	1. Check drive rolls
	2. Bad gun liner	2. Try different gun
ERROR CODE 213, Control board offline	No communication between UI & Control PCB	1. Check UI & Control board connection
		2. Replace Control PCB

If for any reason you do not understand the test procedures or are unable to perform the tests/repairs safely, contact your Lincoln Authorized Service Facility for technical troubleshooting assistance before you proceed.
WWW.LINCOLNELECTRIC.COM/LOCATOR

POWER MIG 260 (208/230/460/575V) CODE 12931

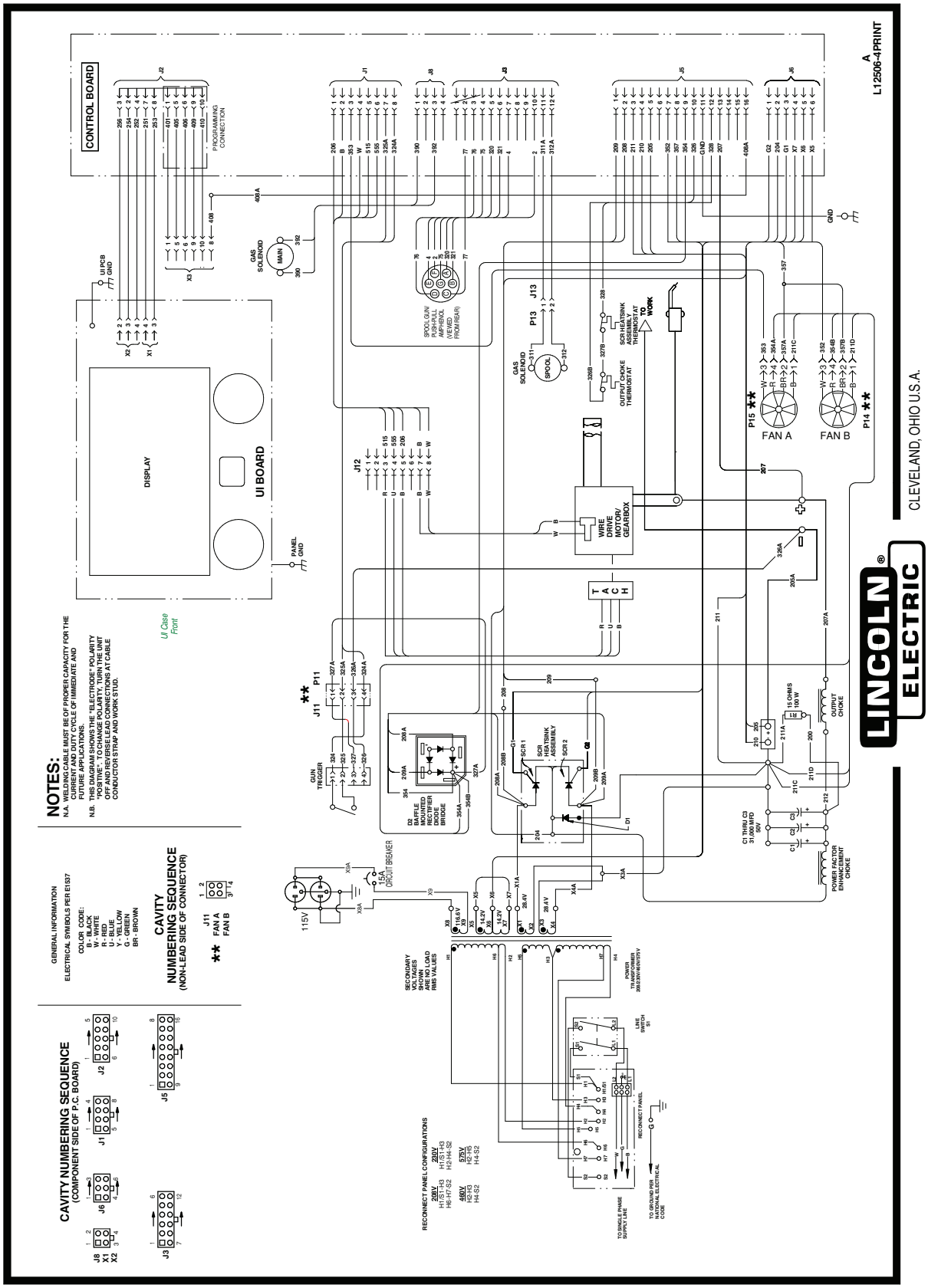

NOTE: This diagram is for reference only. It may not be accurate for all machines covered by this manual. The specific diagram for a particular code is pasted inside the machine on one of the enclosure panels. If the diagram is illegible, write to the Service Department for a replacement. Give the equipment code number.

POWER MIG 260 (208/230/460/575V) CODE 13326

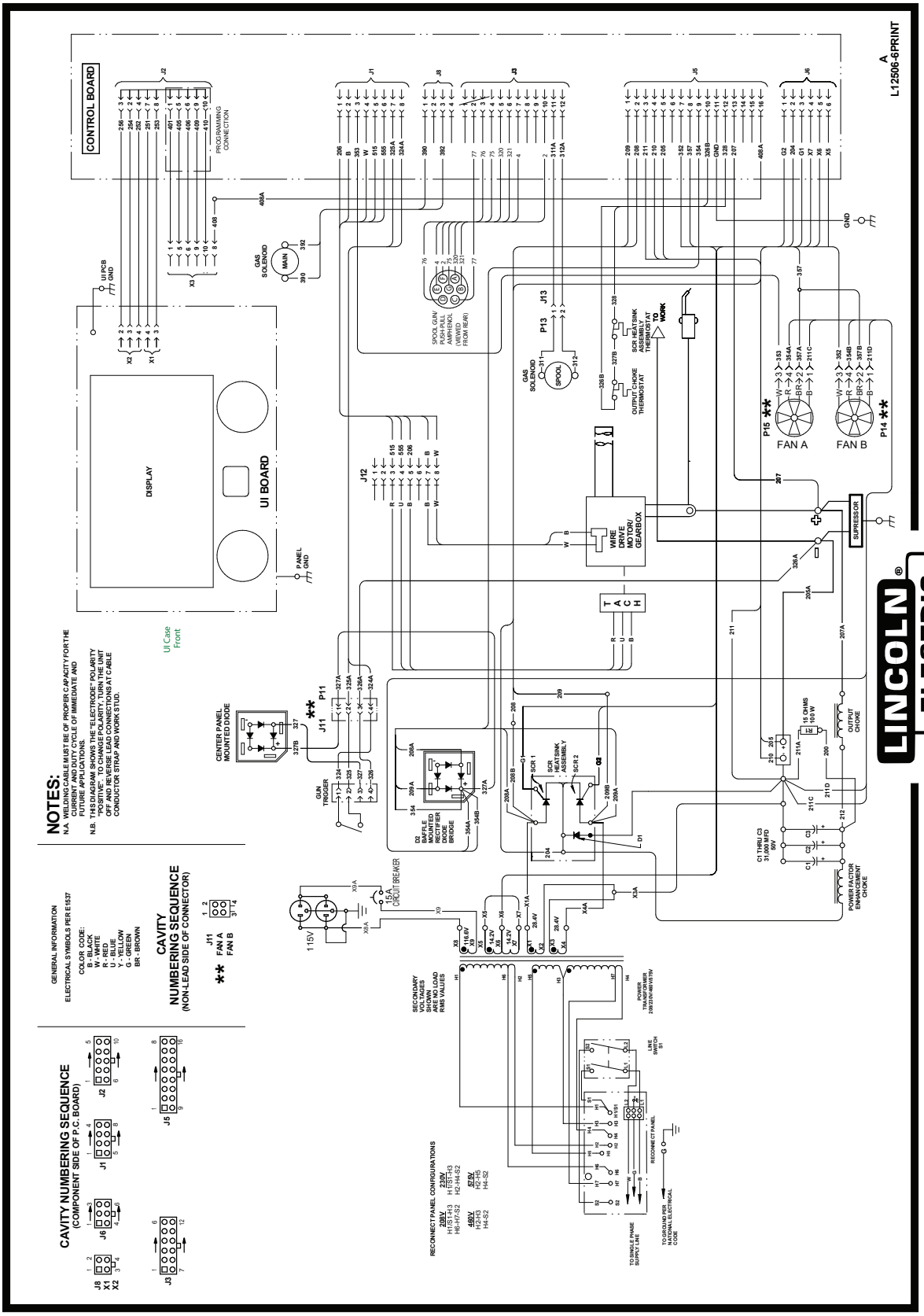

NOTE: This diagram is for reference only. It may not be accurate for all machines covered by this manual. The specific diagram for a particular code is pasted inside the machine on one of the enclosure panels. If the diagram is illegible, write to the Service Department for a replacement. Give the equipment code number.

LINCOLN® ELECTRIC

260 POWER MIG®

Material Thickness/Espesor de el material/Lépaisseur de matériel

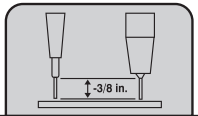

30-40 CFH

		Wire Diameter Dia. de alambre Dia. du fil Inch	mm	22 ga .030in (0.8mm)	20 ga .036 in (0.9mm)	18 ga .048 in (1.2mm)	16 ga .060 in (1.6mm)	14 ga .075 in (2.0mm)	12 ga .105 in (2.5mm)	10 ga .135 in (3.5mm)	3/16" .187 in (4.8mm)	1/4" .250 in (6.4mm)	5/16" .312 in (7.9mm)	3/8" .375 in (9.5mm)	1/2" .500 in (12.7mm)
MIG SuperArc® L-56 (DC+)	Ar/CO_2**	0.025	[0.6]	15/130	16/160	18/190	18/230	18/280	19/330	20/390	21/430	1. For Best Performance - 25/285 with 90% Ar/10% CO2 is recommended.			
		0.030	[0.8]	15/90	15/110	16/140	17/240	17/260	18 /310			2. For Best Performance - 26/285 with 90% Ar/10% CO2 is recommended.			
		0.035	[0.9]			16/120	16/190	16/210	18/240	18/250	19/350	21/370	22/440	22/450	23/500 [1]
		0.045	[1.1]			17/80	17/110	17/140	19/160	19/170	19/180	20/210	21/230	22/250	28/240 [2]
	CO_2	0.025	[0.6]		18/170	19/190	19/230	21/270	20/315						
		0.030	[0.8]		18/140	19/150	19/210	19/220	20/240	21/260	22/290				
		0.035	[0.9]			17/130	18/150	18/190	19/200	20/230	21/250	21/275	22/290	23/350	24/380
		0.045	[1.1]			17/120	17/130	17/150	20/160	22/160	22/160	23/180	26/220	28.5/330	28.5/330
Gas-Shielded Outershield 71M UltraCore® 71A85 (DC+)	Ar/CO_2**	0.035	[0.9]						21/250	22/300	24.5/350	25/400	26/500		
		0.045	[1.1]						23/250	24/230	24/270	25/310	26/350		
	CO_2	0.035	[0.9]						22/230	24/300	25/350	26/400	28/500		
		0.045	[1.1]						24/200	25/230	26/270	27/310	27/350		
Stainless BlueMax® 308 LSI (DC+)	$He/Ar/CO_2$	0.035	[0.9]				19/190	22/280	22/240	23/275	23/350	28/370	26/440		
		0.045	[1.1]						19.5/115	21/165	22/235	22.5/265			
	Ar/O_2**	0.035	[0.9]						22/400	22/400	23/425	23/450	23/475		
		0.045	[1.1]								24.5/250	25.5/315	26/360		
(DC-) Innershield® NR-211-MP & 212		0.035	[0.9]			15/50	16/70	17/110	18/150	19/200	21/275				
		0.045	[1.1]			15/70	16/80	16/90	17/100	17/110	18/120	18/130	19/140		
Aluminum SuperGlaze® 4043 (DC+)	Ar	0.030	[0.8]				19/340	23/370	24/430	24/460	25/500				
		0.035	[0.9]					14.5/270	19/335	23/375	26/590				
		3/64"	[1.2]							24/290	25/300	25/340	25.5/350	26/360	
Aluminum SuperGlaze® 5356 (DC+)	Ar	0.035	[0.9]				14.5/380	21/475	22/570	22/580	22.5/600	23/620	24/700		
		3/64"	[1.2]							18/350	24/500	24.5/510	25/530		

** All dual gas parameters have been developed with 75/25 gas mixture ratio.

Common Magnum® PRO 250L Gun and POWER MIG® wire drive parts

Wire	Contact Tip Information: Electrode Size	Standard	Tapered	Drive Roll Information: Drive Roll	Drive Roll Kit	Cable Liner	Gun Tube Insulator
Solid Steel	.025" (0.6mm)	KP2744-025	KP2744-025T	.023" - .030" (0.6 - 0.8mm)	KP1696-030S	KP42-25-15	KP2773-2
	.030" (0.8mm)	KP2744-030	KP2744-030T				
	.035" (0.9mm)	KP2744-035	KP2744-035T	.035" (0.9mm)	KP1696-035S	KP42-4045-15	
	.040" (1.0mm)	KP2744-040	KP2744-040T	.040" (1.0mm)	KP1696-2		
	.045" (1.1mm)	KP2744-045	KP2744-045T	.045" (1.1mm)	KP1696-045S		
	.035" (0.9mm)	KP2744-035	KP2744-035T	.035", .045" (0.9, 1.1mm)	KP1696-1		
	.045" (1.1mm)	KP2744-045	KP2744-045T				
Cored	.035" (0.9mm)	KP2744-035	KP2744-035T	.035" (0.9mm)	KP1697-035C	KP42-4045-15	
	.045" (1.1mm)	KP2744-045	KP2744-045T	.045" (1.1mm)	KP1697-045C		
Aluminum 4XXX	3/64" (1.2mm)	KP2744-364A	KP2744-364AT	3/64" (1.2mm)	KP1695-3/64A	KP42N-3545-15	
Aluminum 5XXX	3/64" (1.2mm)	KP2744-364A5356	KP2744-364AT5356	3/64" (1.2mm)	KP1695-3/64A	KP42N-3545-15	

(Refer to www.lincolnelectric.com for complete listing)

Gas Nozzle Information

Type	Nozzle	Nozzle Diameter 0.375" *	0.50" *	0.625"	0.75"	Diffuser
Thread-on	1/8" Recess	KP2742-1-38R	KP2742-1-50R	KP2742-1-62R	KP2742-1-75R	KP2746-1
	Flush	KP2742-1-38F	KP2742-1-50F	KP2742-1-62F	KP2742-1-75F	
	1/8" Stickout	KP2742-1-38S	KP2742-1-50S	KP2742-1-62S	KP2742-1-75S	
Slip-on	1/8" Recess		KP2742-2-50R	KP2742-2-62R	KP2742-2-75R	KP2746-2
	1/8" Flush		KP2742-2-50F	KP2742-2-62F	KP2742-2-75F	
	1/8" Stickout		KP2742-2-50S	KP2742-2-62S	KP2742-2-75S	

* This Nozzle Size is designed for use with a tapered tip.

WARNING ADVERTISSEMENT ADVERTENCIA

ELECTRIC SHOCK can kill
LES CHOCS ÉLECTRIQUES peuvent être mortels
DESCARGAS ELECTRICAS pueden matar

- CAUTION: PARTS MAY BE AT WELDING VOLTAGE
- ATTENTION: LES PIÈCES PEUVENT ÊTRE À LA TENSION DE SOUDAGE
- PRECAUCION: LAS PIEZAS PUEDEN ESTAR A LA TENSION DE SOLDADURA

G9320 VM

NOTE: This diagram is for reference only. It may not be accurate for all machines covered by this manual. The specific diagram for a particular code is pasted inside the machine on one of the enclosure panels. If the diagram is illegible, write to the Service Department for a replacement. Give the equipment code number.

This page intentionally left blank

WARNING	● Do not touch electrically live parts or electrode with skin or wet clothing. ● Insulate yourself from work and ground.	● Keep flammable materials away.	● Wear eye, ear and body protection.
Spanish **AVISO DE PRECAUCION**	● No toque las partes o los electrodos bajo carga con la piel o ropa mojada. ● Aislese del trabajo y de la tierra.	● Mantenga el material combustible fuera del área de trabajo.	● Protéjase los ojos, los oídos y el cuerpo.
French **ATTENTION**	● Ne laissez ni la peau ni des vêtements mouillés entrer en contact avec des pièces sous tension. ● Isolez-vous du travail et de la terre.	● Gardez à l'écart de tout matériel inflammable.	● Protégez vos yeux, vos oreilles et votre corps.
German **WARNUNG**	● Berühren Sie keine stromführenden Teile oder Elektroden mit Ihrem Körper oder feuchter Kleidung! ● Isolieren Sie sich von den Elektroden und dem Erdboden!	● Entfernen Sie brennbarres Material!	● Tragen Sie Augen-, Ohren- und Körperschutz!
Portuguese **ATENÇÃO**	● Não toque partes elétricas e electrodos com a pele ou roupa molhada. ● Isole-se da peça e terra.	● Mantenha inflamáveis bem guardados.	● Use proteção para a vista, ouvido e corpo.
Japanese **注意事項**	● 通電中の電気部品、又は溶材にヒフやぬれた布で触れないこと。 ● 施工物やアースから身体が絶縁されている様にして下さい。	● 燃えやすいものの側での溶接作業は絶対にしてはなりません。	● 目、耳及び身体に保護具をして下さい。
Chinese **警 告**	● 皮肤或濕衣物切勿接觸帶電部件及銲條。 ● 使你自己與地面和工件絶緣。	● 把一切易燃物品移離工作場所。	● 佩戴眼、耳及身體勞動保護用具。
Korean **위 험**	● 전도체나 용접봉을 젖은 헝겁 또는 피부로 절대 접촉치 마십시요. ● 모재와 접지를 접촉치 마십시요.	● 인화성 물질을 접근 시키지 마시요.	● 눈, 귀와 몸에 보호장구를 착용하십시요.
Arabic **تحذير**	● لا تلمس الاجزاء التي يسري فيها التيار الكهربائي أو الالكترود بجلد الجسم أو بالملابس المبللة بالماء. ● ضع عازلا على جسمك خلال العمل.	● ضع المواد القابلة للاشتعال في مكان بعيد.	● ضع أدوات وملابس واقية على عينيك وأذنيك وجسمك.

READ AND UNDERSTAND THE MANUFACTURER'S INSTRUCTION FOR THIS EQUIPMENT AND THE CONSUMABLES TO BE USED AND FOLLOW YOUR EMPLOYER'S SAFETY PRACTICES.

SE RECOMIENDA LEER Y ENTENDER LAS INSTRUCCIONES DEL FABRICANTE PARA EL USO DE ESTE EQUIPO Y LOS CONSUMIBLES QUE VA A UTILIZAR, SIGA LAS MEDIDAS DE SEGURIDAD DE SU SUPERVISOR.

LISEZ ET COMPRENEZ LES INSTRUCTIONS DU FABRICANT EN CE QUI REGARDE CET EQUIPMENT ET LES PRODUITS A ETRE EMPLOYES ET SUIVEZ LES PROCEDURES DE SECURITE DE VOTRE EMPLOYEUR.

LESEN SIE UND BEFOLGEN SIE DIE BETRIEBSANLEITUNG DER ANLAGE UND DEN ELEKTRODENEINSATZ DES HERSTELLERS. DIE UNFALLVERHÜTUNGSVORSCHRIFTEN DES ARBEITGEBERS SIND EBENFALLS ZU BEACHTEN.

● Keep your head out of fumes. ● Use ventilation or exhaust to remove fumes from breathing zone.	● Turn power off before servicing.	● Do not operate with panel open or guards off.	**WARNING**
● Los humos fuera de la zona de respiración. ● Mantenga la cabeza fuera de los humos. Utilice ventilación o aspiración para gases.	● Desconectar el cable de alimentación de poder de la máquina antes de iniciar cualquier servicio.	● No operar con panel abierto o guardas quitadas.	Spanish **AVISO DE PRECAUCION**
● Gardez la tête à l'écart des fumées. ● Utilisez un ventilateur ou un aspirateur pour ôter les fumées des zones de travail.	● Débranchez le courant avant l'entretien.	● N'opérez pas avec les panneaux ouverts ou avec les dispositifs de protection enlevés.	French **ATTENTION**
● Vermeiden Sie das Einatmen von Schweibrauch! ● Sorgen Sie für gute Be- und Entlüftung des Arbeitsplatzes!	● Strom vor Wartungsarbeiten abschalten! (Netzstrom völlig öffnen; Maschine anhalten!)	● Anlage nie ohne Schutzgehäuse oder Innenschutzverkleidung in Betrieb setzen!	German **WARNUNG**
● Mantenha seu rosto da fumaça. ● Use ventilação e exhaustão para remover fumo da zona respiratória.	● Não opere com as tampas removidas. ● Desligue a corrente antes de fazer serviço. ● Não toque as partes elétricas nuas.	● Mantenha-se afastado das partes moventes. ● Não opere com os paineis abertos ou guardas removidas.	Portuguese **ATENÇÃO**
● ヒュームから頭を離すようにして下さい。 ● 換気や排煙に十分留意して下さい。	● メンテナンス・サービスに取りかかる際には、まず電源スイッチを必ず切って下さい。	● パネルやカバーを取り外したままで機械操作をしないで下さい。	Japanese **注意事項**
● 頭部遠離煙霧。 ● 在呼吸區使用通風或排風器除煙。	● 維修前切斷電源。	● 儀表板打開或沒有安全罩時不準作業。	Chinese **警 告**
● 얼굴로부터 용접가스를 멀리하십시요. ● 호흡지역으로부터 용접가스를 제거하기 위해 가스제거기나 통풍기를 사용하십시요.	● 보수전에 전원을 차단하십시요.	● 판넬이 열린 상태로 작동치 마십시요.	Korean **위 험**
● ابعد رأسك بعيداً عن الدخان. ● استعمل التهوية أو جهاز ضغط الدخان للخارج لكي تبعد الدخان عن المنطقة التي تتنفس فيها.	● اقطع التيار الكهربائي قبل القيام بأية صيانة.	● لا تشغل هذا الجهاز اذا كانت الاغطية الحديدية الواقية ليست عليه.	Arabic **تحذير**

LEIA E COMPREENDA AS INSTRUÇÕES DO FABRICANTE PARA ESTE EQUIPAMENTO E AS PARTES DE USO, E SIGA AS PRÁTICAS DE SEGURANÇA DO EMPREGADOR.

使う機械や溶材のメーカーの指示書をよく読み、まず理解して下さい。そして貴社の安全規定に従って下さい。

請詳細閱讀並理解製造廠提供的説明以及應該使用的銀捍材料，並請遵守貴方的有関勞動保護規定。

이 제품에 동봉된 작업지침서를 숙지하시고 귀사의 작업자 안전수칙을 준수하시기 바랍니다.

اقرأ بتمعن وافهم تعليمات المصنع المنتج لهذه المعدات والمواد قبل استعمالها واتبع تعليمات الوقاية لصاحب العمل.

CUSTOMER ASSISTANCE POLICY

The business of Lincoln Electric is manufacturing and selling high quality welding equipment, automated welding systems, consumables, and cutting equipment. Our challenge is to meet the needs of our customers, who are experts in their fields, and to exceed their expectations. On occasion, purchasers may ask Lincoln Electric for information or technical information about their use of our products. Our employees respond to inquiries to the best of their ability based on information and specifications provided to them by the customers and the knowledge they may have concerning the application. Our employees, however, are not in a position to verify the information provided or to evaluate the engineering requirements for the particular weldment, or to provide engineering advice in relation to a specific situation or application. Accordingly, Lincoln Electric does not warrant or guarantee or assume any liability with respect to such information or communications. Moreover, the provision of such information or technical information does not create, expand, or alter any warranty on our products. Any express or implied warranty that might arise from the information or technical information, including any implied warranty of merchantability or any warranty of fitness for any customers' particular purpose or any other equivalent or similar warranty is specifically disclaimed.

Lincoln Electric is a responsive manufacturer, but the definition of specifications, and the selection and use of specific products sold by Lincoln Electric is solely within the control of, and remains the sole responsibility of the customer. Many variables beyond the control of Lincoln Electric affect the results obtained in applying these types of fabrication methods and service requirements.

WELD FUME CONTROL EQUIPMENT

The operation of welding fume control equipment is affected by various factors including proper use and positioning of the equipment, maintenance of the equipment and the specific welding procedure and application involved. Worker exposure level should be checked upon installation and periodically thereafter to be certain it is within applicable OSHA PEL and ACGIH TLV limits.

THE LINCOLN ELECTRIC COMPANY
22801 St. Clair Avenue • Cleveland, OH • 44117-1199 • U.S.A.
Phone: +1.216.481.8100 • www.lincolnelectric.com