Operator's Manual

Ranger® 305LPG

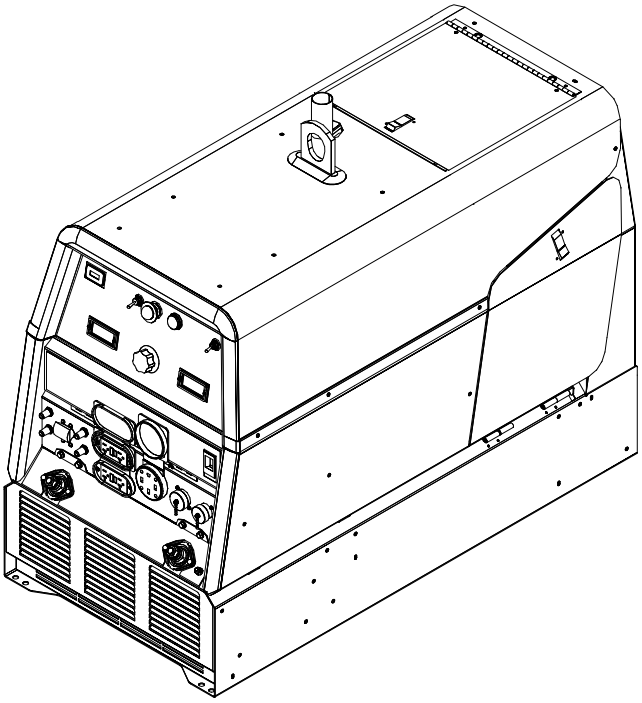

For use with machines having Code Numbers:

12669, 13173

Register your machine:
www.lincolnelectric.com/register

Authorized Service and Distributor Locator:
www.lincolnelectric.com/locator

Save for future reference

Date Purchased

Code: (ex: 10859)

Serial: (ex: U1060512345)

Need Help? Call 1.888.935.3877
to talk to a Service Representative

Hours of Operation:
8:00 AM to 6:00 PM (ET) Mon. thru Fri.

After hours?
Use "Ask the Experts" at lincolnelectric.com
A Lincoln Service Representative will contact you no later than the following business day.

For Service outside the USA:
Email: globalservice@lincolnelectric.com

IM10381 | Issue Date Apr-21

© Lincoln Global, Inc. All Rights Reserved.

THE LINCOLN ELECTRIC COMPANY
22801 St. Clair Avenue • Cleveland, OH • 44117-1199 • U.S.A.
Phone: +1.216.481.8100 • www.lincolnelectric.com

THANK YOU FOR SELECTING A QUALITY PRODUCT BY LINCOLN ELECTRIC.

PLEASE EXAMINE CARTON AND EQUIPMENT FOR DAMAGE IMMEDIATELY

When this equipment is shipped, title passes to the purchaser upon receipt by the carrier. Consequently, claims for material damaged in shipment must be made by the purchaser against the transportation company at the time the shipment is received.

SAFETY DEPENDS ON YOU

Lincoln arc welding and cutting equipment is designed and built with safety in mind. However, your overall safety can be increased by proper installation ... and thoughtful operation on your part. **DO NOT INSTALL, OPERATE OR REPAIR THIS EQUIPMENT WITHOUT READING THIS MANUAL AND THE SAFETY PRECAUTIONS CONTAINED THROUGHOUT.** And, most importantly, think before you act and be careful.

⚠ WARNING

This statement appears where the information must be followed exactly to avoid serious personal injury or loss of life.

⚠ CAUTION

This statement appears where the information must be followed to avoid minor personal injury or damage to this equipment.

KEEP YOUR HEAD OUT OF THE FUMES.

DON'T get too close to the arc. Use corrective lenses if necessary to stay a reasonable distance away from the arc.

READ and obey the Safety Data Sheet (SDS) and the warning label that appears on all containers of welding materials.

USE ENOUGH VENTILATION or exhaust at the arc, or both, to keep the fumes and gases from your breathing zone and the general area.

IN A LARGE ROOM OR OUTDOORS, natural ventilation may be adequate if you keep your head out of the fumes (See below).

USE NATURAL DRAFTS or fans to keep the fumes away from your face.

If you develop unusual symptoms, see your supervisor. Perhaps the welding atmosphere and ventilation system should be checked.

WEAR CORRECT EYE, EAR & BODY PROTECTION

PROTECT your eyes and face with welding helmet properly fitted and with proper grade of filter plate (See ANSI Z49.1).

PROTECT your body from welding spatter and arc flash with protective clothing including woolen clothing, flame-proof apron and gloves, leather leggings, and high boots.

PROTECT others from splatter, flash, and glare with protective screens or barriers.

IN SOME AREAS, protection from noise may be appropriate.

BE SURE protective equipment is in good condition.

Also, wear safety glasses in work area **AT ALL TIMES.**

SPECIAL SITUATIONS

DO NOT WELD OR CUT containers or materials which previously had been in contact with hazardous substances unless they are properly cleaned. This is extremely dangerous.

DO NOT WELD OR CUT painted or plated parts unless special precautions with ventilation have been taken. They can release highly toxic fumes or gases.

Additional precautionary measures

PROTECT compressed gas cylinders from excessive heat, mechanical shocks, and arcs; fasten cylinders so they cannot fall.

BE SURE cylinders are never grounded or part of an electrical circuit.

REMOVE all potential fire hazards from welding area.

ALWAYS HAVE FIRE FIGHTING EQUIPMENT READY FOR IMMEDIATE USE AND KNOW HOW TO USE IT.

SECTION A: WARNINGS

CALIFORNIA PROPOSITION 65 WARNINGS

WARNING: Breathing diesel engine exhaust exposes you to chemicals known to the State of California to cause cancer and birth defects, or other reproductive harm.

- Always start and operate the engine in a well-ventilated area.
- If in an exposed area, vent the exhaust to the outside.
- Do not modify or tamper with the exhaust system.
- Do not idle the engine except as necessary.

For more information go to www.P65 warnings.ca.gov/diesel

WARNING: This product, when used for welding or cutting, produces fumes or gases which contain chemicals known to the State of California to cause birth defects and, in some cases, cancer. (California Health & Safety Code § 25249.5 *et seq.)*

WARNING: Cancer and Reproductive Harm www.P65warnings.ca.gov

ARC WELDING CAN BE HAZARDOUS. PROTECT YOURSELF AND OTHERS FROM POSSIBLE SERIOUS INJURY OR DEATH. KEEP CHILDREN AWAY. PACEMAKER WEARERS SHOULD CONSULT WITH THEIR DOCTOR BEFORE OPERATING.

Read and understand the following safety highlights. For additional safety information, it is strongly recommended that you purchase a copy of "Safety in Welding & Cutting - ANSI Standard Z49.1" from the American Welding Society, P.O. Box 351040, Miami, Florida 33135 or CSA Standard W117.2-1974. A Free copy of "Arc Welding Safety" booklet E205 is available from the Lincoln Electric Company, 22801 St. Clair Avenue, Cleveland, Ohio 44117-1199.

BE SURE THAT ALL INSTALLATION, OPERATION, MAINTENANCE AND REPAIR PROCEDURES ARE PERFORMED ONLY BY QUALIFIED INDIVIDUALS.

FOR ENGINE POWERED EQUIPMENT.

1.a. Turn the engine off before troubleshooting and maintenance work unless the maintenance work requires it to be running.

1.b. Operate engines in open, well-ventilated areas or vent the engine exhaust fumes outdoors.

1.c. Do not add the fuel near an open flame welding arc or when the engine is running. Stop the engine and allow it to cool before refueling to prevent spilled fuel from vaporizing on contact with hot engine parts and igniting. Do not spill fuel when filling tank. If fuel is spilled, wipe it up and do not start engine until fumes have been eliminated.

1.d. Keep all equipment safety guards, covers and devices in position and in good repair. Keep hands, hair, clothing and tools away from V-belts, gears, fans and all other moving parts when starting, operating or repairing equipment.

1.e. In some cases it may be necessary to remove safety guards to perform required maintenance. Remove guards only when necessary and replace them when the maintenance requiring their removal is complete. Always use the greatest care when working near moving parts.

1.f. Do not put your hands near the engine fan. Do not attempt to override the governor or idler by pushing on the throttle control rods while the engine is running.

1.g. To prevent accidentally starting gasoline engines while turning the engine or welding generator during maintenance work, disconnect the spark plug wires, distributor cap or magneto wire as appropriate.

1.h. To avoid scalding, do not remove the radiator pressure cap when the engine is hot.

ELECTRIC AND MAGNETIC FIELDS MAY BE DANGEROUS

2.a. Electric current flowing through any conductor causes localized Electric and Magnetic Fields (EMF). Welding current creates EMF fields around welding cables and welding machines

2.b. EMF fields may interfere with some pacemakers, and welders having a pacemaker should consult their physician before welding.

2.c. Exposure to EMF fields in welding may have other health effects which are now not known.

2.d. All welders should use the following procedures in order to minimize exposure to EMF fields from the welding circuit:

2.d.1. Route the electrode and work cables together - Secure them with tape when possible.

2.d.2. Never coil the electrode lead around your body.

2.d.3. Do not place your body between the electrode and work cables. If the electrode cable is on your right side, the work cable should also be on your right side.

2.d.4. Connect the work cable to the workpiece as close as possible to the area being welded.

2.d.5. Do not work next to welding power source.

ELECTRIC SHOCK CAN KILL.

3.a. The electrode and work (or ground) circuits are electrically "hot" when the welder is on. Do not touch these "hot" parts with your bare skin or wet clothing. Wear dry, hole-free gloves to insulate hands.

3.b. Insulate yourself from work and ground using dry insulation. Make certain the insulation is large enough to cover your full area of physical contact with work and ground.

In addition to the normal safety precautions, if welding must be performed under electrically hazardous conditions (in damp locations or while wearing wet clothing; on metal structures such as floors, gratings or scaffolds; when in cramped positions such as sitting, kneeling or lying, if there is a high risk of unavoidable or accidental contact with the workpiece or ground) use the following equipment:

- Semiautomatic DC Constant Voltage (Wire) Welder.
- DC Manual (Stick) Welder.
- AC Welder with Reduced Voltage Control.

3.c. In semiautomatic or automatic wire welding, the electrode, electrode reel, welding head, nozzle or semiautomatic welding gun are also electrically "hot".

3.d. Always be sure the work cable makes a good electrical connection with the metal being welded. The connection should be as close as possible to the area being welded.

3.e. Ground the work or metal to be welded to a good electrical (earth) ground.

3.f. Maintain the electrode holder, work clamp, welding cable and welding machine in good, safe operating condition. Replace damaged insulation.

3.g. Never dip the electrode in water for cooling.

3.h. Never simultaneously touch electrically "hot" parts of electrode holders connected to two welders because voltage between the two can be the total of the open circuit voltage of both welders.

3.i. When working above floor level, use a safety belt to protect yourself from a fall should you get a shock.

3.j. Also see Items 6.c. and 8.

ARC RAYS CAN BURN.

4.a. Use a shield with the proper filter and cover plates to protect your eyes from sparks and the rays of the arc when welding or observing open arc welding. Headshield and filter lens should conform to ANSI Z87. I standards.

4.b. Use suitable clothing made from durable flame-resistant material to protect your skin and that of your helpers from the arc rays.

4.c. Protect other nearby personnel with suitable, non-flammable screening and/or warn them not to watch the arc nor expose themselves to the arc rays or to hot spatter or metal.

FUMES AND GASES CAN BE DANGEROUS.

5.a. Welding may produce fumes and gases hazardous to health. Avoid breathing these fumes and gases. When welding, keep your head out of the fume. Use enough ventilation and/or exhaust at the arc to keep fumes and gases away from the breathing zone. **When welding hardfacing (see instructions on container or SDS) or on lead or cadmium plated steel and other metals or coatings which produce highly toxic fumes, keep exposure as low as possible and within applicable OSHA PEL and ACGIH TLV limits using local exhaust or mechanical ventilation unless exposure assessments indicate otherwise. In confined spaces or in some circumstances, outdoors, a respirator may also be required. Additional precautions are also required when welding on galvanized steel.**

5. b. The operation of welding fume control equipment is affected by various factors including proper use and positioning of the equipment, maintenance of the equipment and the specific welding procedure and application involved. Worker exposure level should be checked upon installation and periodically thereafter to be certain it is within applicable OSHA PEL and ACGIH TLV limits.

5.c. Do not weld in locations near chlorinated hydrocarbon vapors coming from degreasing, cleaning or spraying operations. The heat and rays of the arc can react with solvent vapors to form phosgene, a highly toxic gas, and other irritating products.

5.d. Shielding gases used for arc welding can displace air and cause injury or death. Always use enough ventilation, especially in confined areas, to insure breathing air is safe.

5.e. Read and understand the manufacturer's instructions for this equipment and the consumables to be used, including the Safety Data Sheet (SDS) and follow your employer's safety practices. SDS forms are available from your welding distributor or from the manufacturer.

5.f. Also see item 1.b.

WELDING AND CUTTING SPARKS CAN CAUSE FIRE OR EXPLOSION.

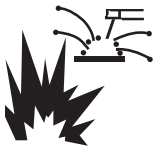

6.a. Remove fire hazards from the welding area. If this is not possible, cover them to prevent the welding sparks from starting a fire. Remember that welding sparks and hot materials from welding can easily go through small cracks and openings to adjacent areas. Avoid welding near hydraulic lines. Have a fire extinguisher readily available.

6.b. Where compressed gases are to be used at the job site, special precautions should be used to prevent hazardous situations. Refer to “Safety in Welding and Cutting” (ANSI Standard Z49.1) and the operating information for the equipment being used.

6.c. When not welding, make certain no part of the electrode circuit is touching the work or ground. Accidental contact can cause overheating and create a fire hazard.

6.d. Do not heat, cut or weld tanks, drums or containers until the proper steps have been taken to insure that such procedures will not cause flammable or toxic vapors from substances inside. They can cause an explosion even though they have been “cleaned”. For information, purchase “Recommended Safe Practices for the Preparation for Welding and Cutting of Containers and Piping That Have Held Hazardous Substances”, AWS F4.1 from the American Welding Society (see address above).

6.e. Vent hollow castings or containers before heating, cutting or welding. They may explode.

6.f. Sparks and spatter are thrown from the welding arc. Wear oil free protective garments such as leather gloves, heavy shirt, cuffless trousers, high shoes and a cap over your hair. Wear ear plugs when welding out of position or in confined places. Always wear safety glasses with side shields when in a welding area.

6.g. Connect the work cable to the work as close to the welding area as practical. Work cables connected to the building framework or other locations away from the welding area increase the possibility of the welding current passing through lifting chains, crane cables or other alternate circuits. This can create fire hazards or overheat lifting chains or cables until they fail.

6.h. Also see item 1.c.

6.I. Read and follow NFPA 51B “Standard for Fire Prevention During Welding, Cutting and Other Hot Work”, available from NFPA, 1 Batterymarch Park, PO box 9101, Quincy, MA 022690-9101.

6.j. Do not use a welding power source for pipe thawing.

CYLINDER MAY EXPLODE IF DAMAGED.

7.a. Use only compressed gas cylinders containing the correct shielding gas for the process used and properly operating regulators designed for the gas and pressure used. All hoses, fittings, etc. should be suitable for the application and maintained in good condition.

7.b. Always keep cylinders in an upright position securely chained to an undercarriage or fixed support.

7.c. Cylinders should be located:

- Away from areas where they may be struck or subjected to physical damage.
- A safe distance from arc welding or cutting operations and any other source of heat, sparks, or flame.

7.d. Never allow the electrode, electrode holder or any other electrically “hot” parts to touch a cylinder.

7.e. Keep your head and face away from the cylinder valve outlet when opening the cylinder valve.

7.f. Valve protection caps should always be in place and hand tight except when the cylinder is in use or connected for use.

7.g. Read and follow the instructions on compressed gas cylinders, associated equipment, and CGA publication P-I, “Precautions for Safe Handling of Compressed Gases in Cylinders,” available from the Compressed Gas Association, 14501 George Carter Way Chantilly, VA 20151.

FOR ELECTRICALLY POWERED EQUIPMENT.

8.a. Turn off input power using the disconnect switch at the fuse box before working on the equipment.

8.b. Install equipment in accordance with the U.S. National Electrical Code, all local codes and the manufacturer’s recommendations.

8.c. Ground the equipment in accordance with the U.S. National Electrical Code and the manufacturer’s recommendations.

Refer to http://www.lincolnelectric.com/safety for additional safety information.

TABLE OF CONTENTS

Page

Installation ..... Section A
Technical Specifications A-1
Machine Specifications A-2
Safety Precautions A-3
Location and Ventilation A-3
Stacking A-3
Angle of Operation A-3
Lifting A-3
Additional Safety Precautions A-3
High Altitude Operation A-3
High Temperature Operation A-3
Towing A-3
Vehicle Mounting A-4
Pre-Operation Engine Service A-4
Fuel A-4
Oil A-5
Engine Coolant A-5
Battery Connections A-5
Muffler Outlet Pipe A-5
Spark Arrester A-5
High Frequency Generators for Tig Applications A-5
Remote Control A-5
Electrical Connections A-5
Machine Grounding A-5
Welding Terminals A-6
Welding Output Cables A-6
Cable Installation A-6
Electrical Device Used with the Ranger 305LPG A-7
Auxiliary Power Receptacles and Plugs A-8
Standby Power Connections A-8
Premises Wiring A-9
Connection of Lincoln Electric Wire Feeders A-10,A-11

Operation ..... Section B
Safety Precautions B-1
General Description B-1
For Auxiliary Power B-1
Engine Operation B-1
Welder Controls B-2
Engine Controls B-3
Starting and Stopping the Engine B-3
Stopping B-4
Welding Operation B-4
Duty Cycle B-4
DC Stick Welding B-4
Constant Current (Stick) Welding B-4
Downhill Pipe Welding B-4
Fuel Consumption B-4
Tig Welding B-5
Typical Current Ranges for Tungsten Electrodes B-5
Wire Welding-CV B-5
Arc Gouging B-6
Auxiliary Power B-6
Simultaneous Welding and Auxiliary Power Loads B-6
Extension Cord Recommendations B-6

Accessories ..... Section C
Options / Accessories and Compatible Lincoln Equipment C-1

TABLE OF CONTENTS

vii

Maintenance.....Section D
Safety Precautions D-1
Routine Maintenance D-1
Kohler Engine.....D-1
Engine Maintenance Components D-1
Engine Oil Change.....D-2
Engine Oil Refill Capacities.....D-2
Oil Filter Change D-2
Air Cleaner Service D-2
Air Pre-Cleaner Service D-2
Air Filter Paper Element D-3
Spark Plug D-3
Spark Plug Service D-3
Engine Adjustment.....D-4
Battery Maintenance D-4
Servicing Optional Spark Arrestor D-4
Welder / Generator Maintenance D-5
Storage D-5
Cleaning.....D-5
Brush Removal and Replacement D-5

Troubleshooting.....Section E
How to Use Troubleshooting Guide.....E-1 thru E-5

Diagrams and Dimension Print .....Section F

Parts List **parts.lincolnelectric.com**

Content/details may be changed or updated without notice. For most current Instruction Manuals, go to parts.lincolnelectric.com.

TECHNICAL SPECIFICATIONS - RANGER® 305LPG (K2937-10)

INPUT - LPG ENGINE

Make/Model	Description	Horsepower @ 3600 RPM	Operating Speed	Displacement cu.in.(cu.cm) Bore x Stroke in.(mm)	Starting	Capacities System
Kohler CH730S OHV	2 Cylinder 4 Cycle Air Cooled LPG Engine	25 HP	High 3700RPM Full Load 3500RPM Low Idle 2400RPM	44 (725) 3.27 x 2.64 (83x67)	12VDC Battery and Starter Push Button Starter Group 58 Battery (435 cold	Fuel: LPG Cylinder Oil 2.0Qts. (1.9L)

RATED OUTPUT @ 104° F (40° C) - WELDER

Welding Output	Volts at Rated Amps	Duty Cycle Max.	OCV @ 3700 RPM
CC STICK DC Output	25 Volts @ 300 Amps	100%	60 Volts
CC STICK Output Range	30 to 305 Amps	-------	
PIPE DC Output	25 Volts @ 300 Amps	100%	
PIPE Output Range	40 to 300 Amps	-------	
TIG Output Range	20 to 250 Amps	-------	
CV WIRE DC Output	25 Volts @ 300 Amps	100%	
CV WIRE Output Range	14 to 29 volts	-------	

RATED OUTPUT @ 104° F (40° C) - GENERATOR

Auxiliary Power [1]
10,000 Watts Peak, 9000 Watts Continuous, 60 Hz 120/240 Volts

PHYSICAL DIMENSIONS

HEIGHT	WIDTH	DEPTH	WEIGHT
30.00** in. 762.0 mm	21.50 in 546.0 mm	42.25 in. 1073.0 mm	480 lbs. (218Kg)
** Top of enclosure, add 6.0”(152mm) for exhaust			

ENGINE COMPONENTS

LUBRICATION	VALVE LIFTERS	FUEL SYSTEM	GOVERNOR
Full Pressure With Full Flow Filter	Hydraulic	LPG Regulator and Vaporizer	Mechanical Governor 5% Regulation
AIR CLEANER Dual Element	**ENGINE IDLER** Automatic Idler	**MUFFLER** Low noise Muffler: Top outlet can be rotated. Made from Long life, aluminized steel.	**ENGINE PROTECTION** Shutdown on low oil pressure.

ENGINE WARRANTY: 2 year unlimited hours (See engine manufacturer warranty for details.) Kohler

1. Output rating in watts is equivalent to volt-amperes at unity power factor. Output voltage is within ± 10% at all loads up to rated capacity. When welding, available auxiliary power will be reduced.

MACHINE SPECIFICATIONS - RANGER® 305LPG (K2937-10)

RECEPTACLES AND CIRCUIT BREAKERS		
RECEPTACLES	**AUXILIARY POWER CIRCUIT BREAKER**	**OTHER CIRCUIT BREAKERS**
(2) 120VAC Duplex GFCI(5-20R) (1) 120/240VAC Dual Voltage Full KVA (14-50R)	Two 20AMP for Two Duplex Receptacle One 50AMP for Dual Voltage (2-pole)	20AMP for Battery Charging Circuit 15AMP for 42V Wire Feeder Power

SAFETY PRECAUTIONS

⚠ WARNING

Do not attempt to use this equipment until you have thoroughly read the engine manufacturer's manual supplied with your welder. It includes important safety precautions, detailed engine starting, operating and maintenance instructions, and parts lists.

ELECTRIC SHOCK can kill.

- **Do not touch electrically live parts or electrode with skin or wet clothing.**
- **Insulate yourself from work and ground**
- **Always wear dry insulating gloves.**

ENGINE EXHAUST can kill.

- **Use in open, well ventilated areas or vent exhaust outside.**

MOVING PARTS can injure.

- **Do not operate with doors open or guards off.**
- **Stop engine before servicing.**
- **Keep away from moving parts.**

See additional warning information at

Only qualified personnel should install, Use, or service this equipment.

LOCATION AND VENTILATION

The welder should be located to provide an unrestricted flow of clean, cool air to the cooling air inlets and to avoid restricting the cooling air outlets. Also, locate the welder so that the engine exhaust fumes are properly vented to an outside area.

STACKING

RANGER® 305LPG machines cannot be stacked.

ANGLE OF OPERATION

Engines are designed to run in the level condition which is where the optimum performance is achieved. The maximum angle of continuous operation is 15 degrees in any direction. If the engine is to be operated at an angle, provisions must be made for checking and maintaining the oil level at the normal (FULL) oil capacity in the crankcase.

When operating the welder at an angle, the effective fuel capacity will be slightly less than the specified 12 gallons.

LIFTING

The RANGER® 305LPG weighs approximately 480 lbs. A lift bail is mounted to the machine and should always be used when lifting the machine.

ADDITIONAL SAFETY PRECAUTIONS

⚠ WARNING

FALLING EQUIPMENT can Cause injury.

- **Lift only with equipment of adequate lifting capacity.**
- **Be sure machine is stable when lifting.**
- **Do not lift this machine using lift bale if it is equipped with a heavy accessory such as trailer or gas cylinder.**
- **Do not lift machine if lift bale is damaged.**
- **Do not operate machine while Suspended from lift bale.**

HIGH ALTITUDE OPERATION

The RANGER® 305LPG requires no adjustments for High Altitude.

⚠ CAUTION

Do not operate with a high altitude jet installed at altitudes below 5000 ft. This will result in the engine running too lean and result in higher engine operating temperatures which can shorten engine life.

HIGH TEMPERATURE OPERATION

At temperatures above 40°C(104°F), Welder output de-rating is necessary. For maximum output ratings, de-rate the welder output 2 volts for every 10°C(50°F) above 40°C(104°F).

TOWING

The recommended trailer for use with this equipment for road, in-plant and yard towing by a vehicle(1) is Lincoln's K957-1. If the user adapts a non-Lincoln trailer, he must assume responsibility that the method of attachment and usage does not result in a safety hazard nor damage the welding equipment. Some of the factors to be considered are as follows:

1. Design capacity of trailer vs. Weight of Lincoln equipment and likely additional attachments.
2. Proper support of, and attachment to, the base of the welding equipment so there will be no undue stress to the framework.
3. Proper placement of the equipment on the trailer to insure stability side to side and front to back when being moved and when standing by itself while being operated or serviced.
4. Typical conditions of use, i.e., travel speed; roughness of surface on which the trailer will be operated; environmental conditions; like maintenance.
5. Conformance with federal, state and local laws.(1)

(1) Consult applicable federal, state and local laws regarding specific requirements for use on public highways.

VEHICLE MOUNTING

⚠ WARNING

Improperly mounted concentrated loads may cause unstable vehicle handling and tires or other components to fail.

- **Only transport this Equipment on serviceable vehicles which are rated and designed for such loads.**
- **Distribute, balance and secure loads so vehicle is stable under conditions of use.**
- **Do not exceed maximum rated loads for components such as suspension, axles and tires.**
- **Mount equipment base to metal bed or frame of vehicle.**
- **Follow vehicle manufacture's instructions.**

PRE-OPERATION SERVICE

⚠ CAUTION

READ the engine operating and maintenance instructions supplied with this machine.

⚠ WARNING

LPG fuel can cause fire or explosion.

- **All leak testing must be done in a well ventilated area free from all potential ignition sources.**
- **Keep sparks and flame away from machine and LPG supply cylinder.**
- **Do not expose the LPG supply cylinder to temperatures exceeding 120°F (49°C).**
- **Do not weld on or near the LPG supply cylinder.**
- **Do not smoke or allow any potential ignition sources near the LPG supply cylinder.**
- **Always be certain that the LPG supply cylinder is NOT in the welding circuit. Do not allow either welding cable to come in contact with the supply cylinder.**
- **Replace the fuel supply hose if there is excessive abrasion, cracks or wear or if the hose is cut.**

FUEL

A lift truck type coupler is provided on the supplied fuel line for easy hand attachment to a lift truck type LPG fuel cylinder. The fuel cylinder must meet D.O.T. Specification 4E-240. The valve on the fuel cylinder must be installed on the outlet marked "LIQUID".
The engine will not develop full power if connected to the vapor outlet.

⚠ CAUTION

Be certain that the cylinder valve is CLOSED before attempting to attach the fuel supply hose coupler to the cylinder. Connect the coupler to the fuel cylinder and tighten by hand.

After connecting the fuel supply to the supply cylinder, open the valve on the fuel cylinder and leak test by brushing a 50/50 soap and water solution on to the following connections:

- Both ends of the fuel hose where it enters the metal connector.
- The threaded fitting on the end of fuel hose attached to the Ranger® 305 LPG fuel shut off solenoid.
- The fuel hose coupler and the connection to the cylinder valve.
- The stem of the cylinder valve and where the valve is attached to the top of the cylinder.
- All other fittings on top of the fuel cylinder.

If growing bubbles appear, there is a leak. Re-tighten connection or replace defective component. Retest to make sure that there is no leak.

Leak test must be performed each time the fuel cylinder is replaced.

Always close the cylinder valve when the machine is not being used.

The specification for aluminum lift truck cylinders are shown below:

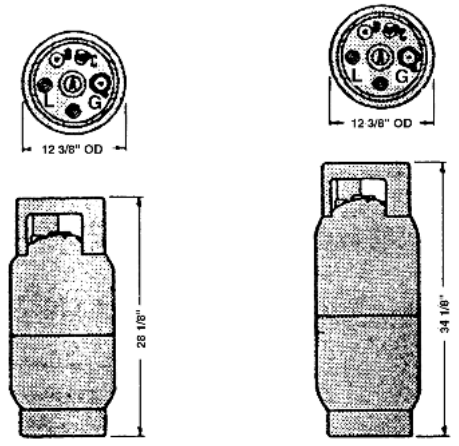

33-1/2 lb. **43-1/2 lb.**

Capacity LP-Gas (LBS.)	Cylinder Volume (Cu. In.)	Weight Empty (LBS.)	Foot ring Outside Diameter
33.5	2219	22.5	9 3/8"
43.5	2873	25.5	9 3/8"

Note: The Ranger® 305 LPG cannot be used with vapor draw LP gas cylinders such as those used for recreation vehicles, trailers, grills, and boats.

OIL

The RANGER® 305LPG is shipped with the engine crankcase filled with high quality SAE 10W-30 oil. Check the oil level before starting the engine. If it is not up to the full mark on the dip stick, add oil as required. Check the oil level every four hours of running time during the first 25 running hours. Refer to the engine Operator's Manual for specific oil recommendations and break-in information. The oil change interval is dependent on the quality of the oil and the operating environment. Refer to the Engine Operator's Manual for the proper service and maintenance intervals.

ENGINE COOLING SYSTEM

⚠ WARNING

Air to cool the engine is drawn in lower set of louvers on the case back. It is important that the intake air is not restricted. Allow a minimum clearance of 2 feet (Im) from the case back to a vertical surface.

BATTERY CONNECTION

⚠ CAUTION

Use caution as the electrolyte is a strong acid that can burn skin and damage eyes.

The RANGER® 305LPG is shipped with the negative battery cable disconnected. Make certain that the RUN-STOP switch is in the STOP position. Remove the two screws from the rear battery tray using a screwdriver or a 3/8" socket. Attach the negative battery cable to the negative battery terminal and tighten using a 1/2" socket or wrench.

NOTE: This machine is furnished with a wet charged battery; if unused for several months, the battery may require a booster charge. Be careful to charge the battery with the correct polarity.

MUFFLER OUTLET PIPE

Using the clamp provided secure the outlet pipe to the outlet tube with the pipe positioned such that it will direct the exhaust in the desired direction. Tighten using a 9/16" socket or wrench.

SPARK ARRESTER

Some federal, state or local laws may require that gasoline or diesel engines be equipped with exhaust spark arresters when they are operated in certain locations where unarrested sparks may present a fire hazard. The standard muffler included with this welder does not qualify as a spark arrester. When required by local regulations, a suitable spark arrester, such as the K1898-1 must be installed and properly main-

⚠ CAUTION

tained.

An incorrect spark arrestor may lead to damage to the engine or adversely affect performance.

HIGH FREQUENCY GENERATORS FOR TIG APPLICATIONS

The K930-2 TIG Module is suitable for use with the RANGER® 305LPG. The RANGER® 305LPG and any high frequency generating equipment must be properly grounded. See the K930-2 Operating Manual for completed instructions on installation, operation, and maintenance.

REMOTE CONTROL

The RANGER® 305LPG is equipped with a 6-pin and a 14-pin connector. The 6-pin connector is for connecting the K857 or K857-1 Remote Control (optional) or for TIG welding, the K870 foot Amptrol or the K963-3 hand Amptrol.

When in the CC-STICK, PIPE, and CV-WIRE modes and when a remote control is connected to the Amphenol, the auto-sensing circuit in the RANGER® 305LPG automatically switches the OUTPUT control from control at the welder to remote control.

The 14-pin connector is used to directly connect a wire feeder or TIG Module (K930-2) control cable. In the CV-WIRE mode, the RANGER® 305LPG auto-sensing circuit automatically makes the RANGER® 305LPG Output Control inactive and the wire feeder voltage control active when the control cable is connected to the 14-pin connector.

NOTE: When a wire feeder with a built in welding voltage control is connected to the 14-pin connector, do not connect anything to the 6-pin connector.

ELECTRICAL CONNECTIONS

MACHINE GROUNDING

Because this portable engine driven welder creates its own power, it is not necessary to connect its frame to an earth ground, unless the machine is connected to premises wiring (home, shop, etc.) To prevent dangerous electric shock, other equipment to which this

⚠ WARNING

engine driven welder supplies power must:

- **Be grounded to the frame of the welder using a grounded type plug.**
- **Be double insulated. Do not ground the machine to a pipe that carries explosive or combustible material.**

When this welder is mounted on a truck or trailer, its frame must be electrically connected to the metal frame of the vehicle, use a #8 or larger copper wire connected between the machine grounding stud and frame of the vehicle. When this engine driven welder is connected to premises wiring such as that in a home or shop, its frame must be connected to the system earth ground. See further connection instructions in the section entitled "Standby Power Connections" as well as the article on grounding in the latest U.S. National Electrical Code and the local code.

In general, if the machine is to be grounded, it should be connected with a #8 or larger copper wire to a solid earth ground such as a metal water pipe going into the ground for at least ten feet and having no insulated joints, or to the metal framework of a building which has been effectively grounded.

The U.S. National Electrical Code lists a number of alternate means of grounding electrical equipment. A machine grounding stud marked with the ⏚ symbol is provided on the front of the welder.

WELDING TERMINALS

The RANGER® 305LPG is equipped with a toggle switch for selecting "hot" welding terminal when in the "WELD TERMINALS ON" position or "cold" welding terminal when in the "REMOTELY CONTROLLED" position.

WELDING OUTPUT CABLES

With the engine off connect the electrode and work cables to the output studs. The welding process dictates the polarity of the electrode cable. These connections should be checked periodically and tightened with a 3/4" wrench.

Table A.1 lists recommended cable sizes and lengths for rated current and duty cycle. Length refers to the distance from the welder to the work and back to the welder. Cable diameters are increased for long cable lengths to reduce voltage drops.

TABLE A-1

TOTAL COMBINED LENGTH OF ELECTRODE AND WORK CABLES

Cable Length	Cable Size for 305 Amps 100% Duty Cycle
0-100Ft. (0-30 meters)	1 / 0 AWG
100-150 Ft. (Im meters)	2 / 0 AWG
150-200 Ft. (46-61 meters)	3 / 0 AWG

CABLE INSTALLATION

Install the welding cables to your RANGER® 305LPG as follows:

1. The engine must be OFF to install welding cables.
2. Remove the flanged nuts from the output terminals.
3. Connect the electrode holder and work cables to the weld output terminals. The terminals are identified on the case front.
4. Tighten the flanged nuts securely.
5. Be certain that the metal piece you are welding (the “work”) is properly connected to the work clamp and cable.

⚠ CAUTION

6. Check and tighten the connections periodically.

- **Loose connections will cause the output terminals to overheat. The terminals may eventually melt.**
- **Do not cross the welding cables at the output terminal connection. Keep the cables isolated and separate from one another.**

TABLE III ELECTRICAL DEVICE USE WITH THIS PRODUCT.		
Type	**Common Electrical Devices**	**Possible Concerns**
Resistive	Heaters, toasters, incandescent light bulbs, electric range, hot pan, skillet, coffee maker.	NONE
Capacitive	TV sets, radios, microwaves, appliances with electrical control.	Voltage spikes or high voltage regulation can cause the capacitative elements to fail. Surge protection, transient protection, and additional loading is recommended for 100% fail-safe operation. **DO NOT RUN THESE DEVICES WITHOUT ADDITIONAL RESISTIVE TYPE LOADS.**
Inductive	Single-phase induction motors, drills, well pumps, grinders, small refrigerators, weed and hedge trimmers	These devices require large current inrush for starting. Some synchronous motors may be frequency sensitive to attain maximum output torque, but they SHOULD BE SAFE from any frequency induced failures.
Capacitive/Inductive	Computers, high resolution TV sets, complicated electrical equipment.	An inductive type line conditioner along with transient and surge protection is required, and liabilities still exist. **DO NOT USE THESE DEVICES WITH THIS PRODUCT**
The Lincoln Electric Company is not responsible for any damage to electrical components improperly connected		

AUXILIARY POWER RECEPTACLES

Start the engine and set the “IDLER” control switch to the “High Idle” mode. Voltage is now correct at the receptacles for auxiliary power. This must be done before a tripped GFCI can be reset properly. See the MAINTENANCE section for detailed information on testing and resetting the GFCI.

The auxiliary power of the RANGER 305 LPG consists of two 20 Amp-120 VAC GFCI (5-20R) duplex receptacles and one 50 Amp 120/240 VAC (14-50R) receptacle. The 240 VAC receptacle can be split for single phase 120 VAC operation.

The auxiliary power capacity is 9,000 Watts Peak, 8000 Watts Continuous of 60 Hz, single phase power. The auxiliary power capacity rating in watts is equivalent to volt-amperes at unity power factor. The max permissible current of the 240 VAC output is 33 Amps. The 240 VAC output can be split to provide two separate 120 VAC outputs with a max permissible current of 33 Amps per output to two separate 120 VAC branch circuits (these circuits cannot be paralleled). Output voltage is within ± 10% at all loads up to rated capacity. All auxiliary power is protected by circuit breakers.

The 120 V auxiliary power receptacles should only be used with three wire grounded type plugs or approved double insulated tools with two wire plugs. The current rating of any plug used with the system must be at least equal to the current capacity of the associated receptacle.

NOTE: The 240 V receptacle has two 120 V circuits, but are of opposite polarities and cannot be paralleled.

STANDBY POWER CONNECTIONS

The RANGER® 305LPG is suitable for temporary, standby or emergency power using the engine manufacturer’s recommended maintenance schedule.

The RANGER® 305LPG can be permanently installed as a standby power unit for 240 VAC, 3 wire, single phase, 40 amp service. Connections must be made by a licensed electrician who can determine how the 120/240 VAC power can be adapted to the particular installation and comply with all applicable electrical codes.

- Install the double-pole, double-throw switch between the power company meter and the premises disconnect. Switch rating must be the same or greater than the customer’s premises disconnect and service over current protection.

- Take necessary steps to assure load is limited to the capacity of the RANGER® 305LPG by installing a 40 amp, 240 VAC double pole circuit breaker. Maximum rated load for each leg of the 240 VAC auxiliary is 40 amperes. Loading above the rated output will reduce output voltage below the allowable - 10% of rated voltage which may damage appliances or other motor-driven equipment and may result in overheating of the RANGER® 305LPG engine and/or alternator windings.

- Install a 50 amp, 120/240 VAC plug (NEMA Type 14-50) to the double-pole circuit breaker using No. 6, 4 conductor cable of the desired length. (The 50 amp, 120/240 VAC plug is available in the optional K802R plug kit or as part number T12153-9.)

- Plug this cable into the 50 Amp, 120/240 Volt receptacle on the RANGER® 305LPG case front.

CONNECTION OF RANGER® 305LPG TO PREMISES

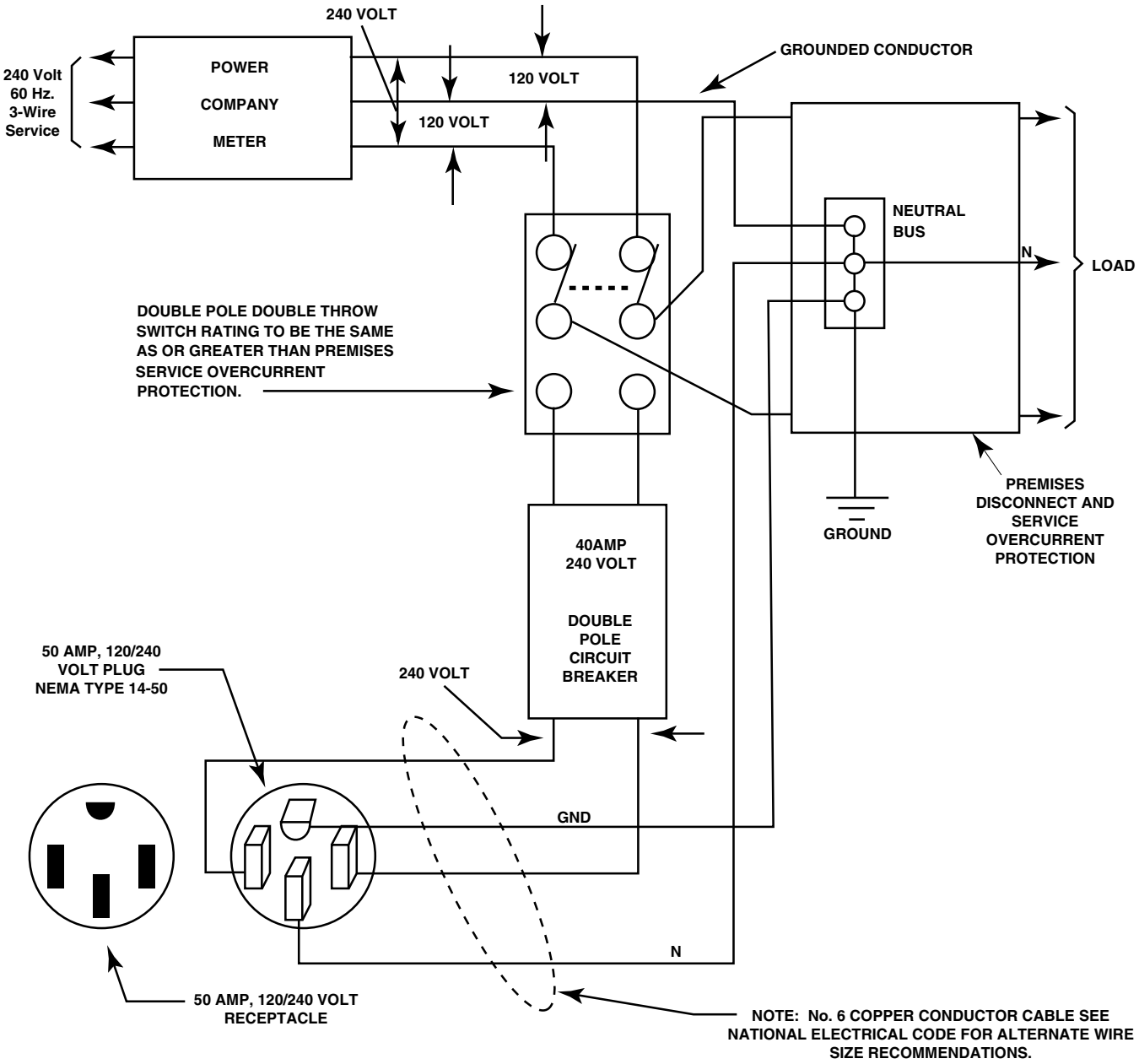

⚠ WARNING

- **Only a licensed, certified, trained electrician should install the machine to a premises or residential electrical system. Be certain that:**
- **The installation complies with the National Electrical Code and all other applicable electrical codes.**
- **The premises is isolated and no feedback into the utility system can occur. Certain state and local laws require the premises to be isolated before the Generator is linked to the premises. Check your state and local requirements.**
- **A double pole, double throw transfer switch in conjunction with the properly rated double throw circuit breaker is connected between the generator power and the utility meter.**

CONNECTION OF LINCOLN ELECTRIC WIRE FEEDERS

Connection of LN-7 or LN-8 to the RANGER® 305LPG

1. Shut the welder off.
2. Connect the LN-7 or LN-8 per instructions on the appropriate connection diagram in Section F
3. Set the "WIRE FEEDER VOLTMETER" switch to either "+" or "-" as required by the electrode being used.
4. Set the "MODE" switch to the "CV WIRE " position.
5. Set the "ARC CONTROL" knob to "0" initially and adjust to suit.
6. Set the "WELD TERMINALS" switch to the "REMOTELY CONTROLLED" position.
7. Set the "IDLE" switch to the "HIGH" position.

Connection of LN-15 to the RANGER® 305LPG

These connections instructions apply to both the LN-15 Across The-Arc and Control Cable models. The LN-15 has an internal contactor and the electrode is not energized until the gun trigger is closed. When the gun trigger is closed the wire will begin to feed and the welding process is started.

- Shut the welder off.

- For electrode Positive, connect the electrode cable to the "+" terminal of the welder and work cable to the "-" terminal of the welder. For electrode Negative, connect the electrode cable "-" terminal of the welder and work cable to the "+" terminal of the welder.

- **Across The-Arc Model:**

  Attach the single lead from the front of the LN-15 to work using the spring clip at the end of the lead. This is a control lead to supply current to the wire feeder motor; it does not carry welding current.

  Set the "WELD TERMINALS" switch to "WELD TERMINALS ON"

- **Control Cable Model:**

  Connect Control Cable between Engine Welder and Feeder.

  Set the "WELD TERMINALS" switch to "REMOTELY CONTROLLED"

- Set the MODE switch to the "CV-WIRE " position.
- Set the "WIRE FEEDER VOLTMETER" switch to either "+" or "-" as required by the electrode polarity being used.
- Set the "ARC CONTROL" knob to "0" initially and adjust to suit.
- Set the "IDLE" switch to the "AUTO" position.

⚠ WARNING

Connection of the LN-25 to the RANGER® 305LPG
Shut off welder before making any electrical connections.

The LN-25 with or without an internal contactor may be used with the RANGER® 305LPG. See the appropriate connection diagram in Section F.
NOTE: The LN-25 (K431) Remote Control Module and (K432) Remote Cable are not recommended for use with the RANGER® 305LPG.

1. Shut the welder off.

2. For electrode Positive, connect the electrode cable from the LN-25 to the "+" terminal of the welder and work cable to the "-" terminal of the welder. For electrode Negative, connect the electrode cable from the LN-25 to the "-" terminal of the welder and work cable to the "+" terminal of the welder.

3. Attach the single lead from the front of the LN-25 to work using the spring clip at the end of the lead. This is a control lead to supply current to the wire feeder motor; it does not carry welding current.

4. Set the MODE switch to the "CV-WIRE " position.

5. Set the "WELD TERMINALS" switch to "WELD TERMINALS ON"

6. Set the "ARC CONTROL" knob to "0" initially and adjust to suit.

7. Set the "IDLE" switch to the "AUTO" position. When not welding, the RANGER® 305LPG engine will be at the low idle speed. If you are using an LN-25 with an internal contactor, the electrode is not energized until the gun trigger is closed.

8. When the gun trigger is closed, the current sensing circuit will cause the RANGER® 305LPG engine to go to the high idle speed, the wire will begin to feed and the welding process started. When welding is stopped, the engine will revert to low idle speed after approximately 12 seconds unless welding is resumed.

⚠ CAUTION

If you are using an LN-25 without an internal contactor, the electrode will be energized when the RANGER® 305LPG is started.

Connection of LN-742,K487-25 Spool Gun, and Cobramatic to RANGER® 305LPG

1. Shut the welder off.

2. Connect per instructions on the appropriate connection diagram in Section F.

SAFETY PRECAUTIONS

Read and understand this entire section before operating your RANGER® 305LPG.

Do not attempt to use this equipment until you have thoroughly read all operating and maintenance manuals supplied with your machine. They include important safety precautions, detailed engine starting, operating and maintenance instructions and parts lists.

ELECTRIC SHOCK can kill.
- **Do not touch electrically live parts such as output terminals or internal wiring.**
- **Insulate yourself from the work and ground.**
- **Always wear dry insulating gloves.**

ENGINE EXHAUST can kill.
- **Use in open, well ventilated areas or vent exhaust outside**
- **Do not stack anything near the engine.**

MOVING PARTS can injure.
- **Do not operate with doors open or guards off.**
- **Stop engine before servicing.**
- **Keep away from moving parts**

- **Only qualified personnel should operate this equipment.**

ADDITIONAL SAFETY PRECAUTIONS

Always operate the welder with the hinged door closed and the side panels in place as these provide maximum protection from moving parts and insure proper cooling air flow.

GENERAL DESCRIPTION

The RANGER® 305LPG is a gasoline engine powered DC multi-process welding power source and 120 / 240 volt AC power generator. The engine drives a generator that supplies three phase power for the DC welding circuit and single phase power for the AC auxiliary outlets. The DC welding control system uses state of the art Chopper Technology CT® for superior welding performance. The RANGER 305LPG is **NOT RECOMMENED** for pipe thawing.

FOR AUXILIARY POWER:

Start the engine and set the IDLER control switch to the desired operating mode. Full power is available regardless of the welding control settings providing no welding current is being drawn.

The auxiliary power of the RANGER® 305LPG consists of two 20 Amp-120 VAC GFCI (5-20R) duplex receptacles and one 50 Amp 120/240 VAC (14-50R) receptacle. The 240 VAC receptacle can be split for single phase 120 VAC operation.

ENGINE OPERATION

Before Starting the Engine:

- Be sure the machine is on a level surface.
- Open top engine door and remove the engine oil dipstick and wipe it with a clean cloth. Reinsert the dipstick and check the level on the dipstick.
- Add oil (if necessary) to bring the level up to the full mark. Do not overfill. Close engine door.
- See Engine Owner's Manual for specific oil recommendations.

⚠ WARNING

- **The combustion of LPG fuel does produce carbon monoxide. Although the level of CO_2 emission is lower than gasoline combustion, the exhaust from the Ranger® 305LPG can kill.**
- **Avoid breathing of vapor.**
- **Keep sparks and flame away from tank.**

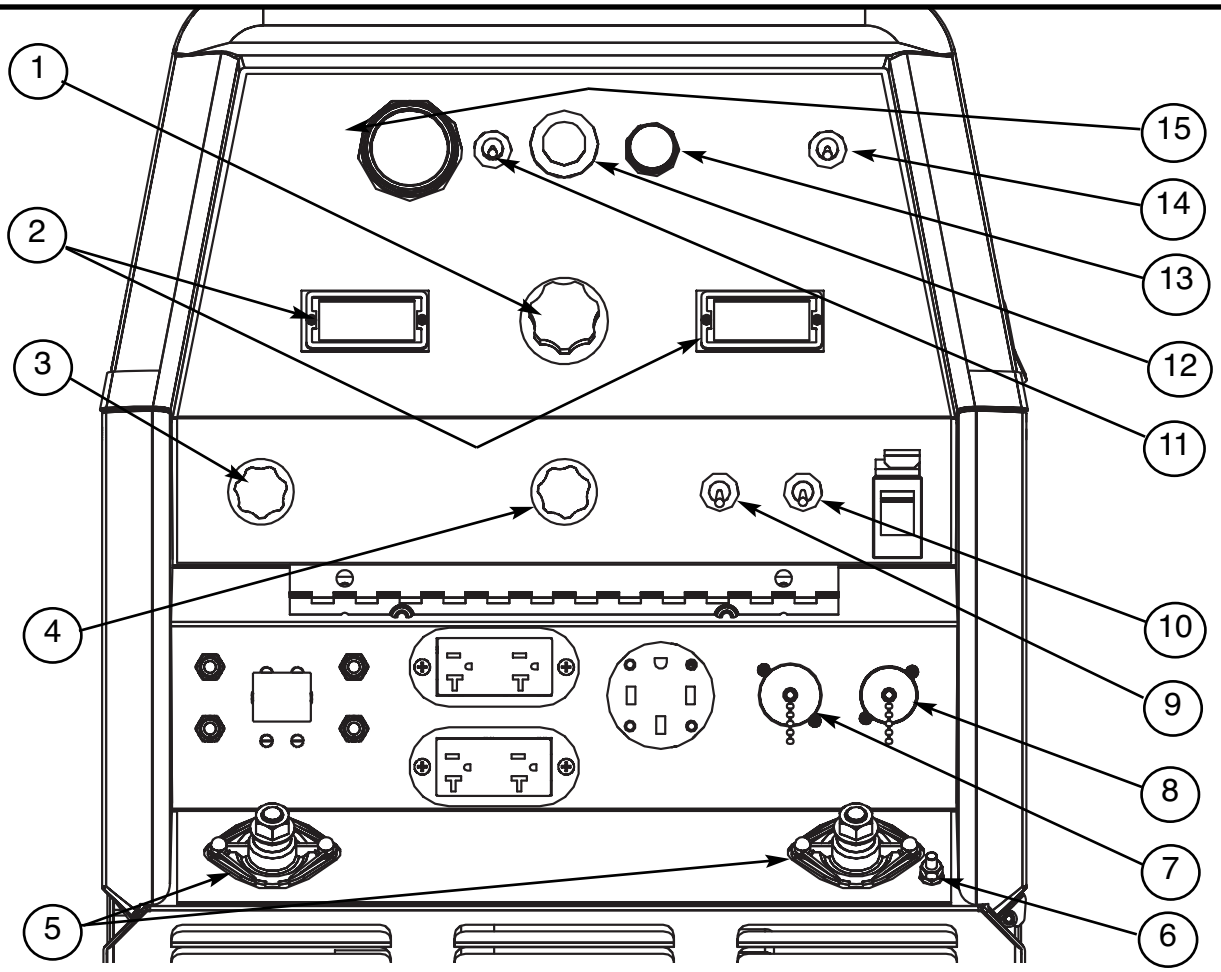

WELDING CONTROLS

1. OUTPUT CONTROL:

The CONTROL dial provides continuous control of the welding current or welding voltage depending on the selected welding mode. This control is not active in the CC-STICK, DOWN HILL PIPE, and CV-WIRE modes when a remote control or wire feeder with remote control is connected to either the 6 pin or 14 pin Amphenol.

2. DIGITAL OUTPUT METERS

The digital meters allow the output voltage (CV-WIRE mode) or current (CC-STICK, DOWN HILL PIPE and TIG modes) to be set prior to welding using the OUTPUT control dial. During welding, the meter display the actual output voltage (VOLTS) and current (AMPS). A memory feature holds the display of both meters on for seven seconds after welding is stopped. This allows the operator to read the actual current and voltage just prior to when welding was ceased. While the display is being held the left-most decimal point in each display will be flashing. The accuracy of the meters is +/- 3%.

3. WELD MODE SELECTOR SWITCH:

(Provides four selectable welding modes)

CV-WIRE
DOWN HILL PIPE
CC-STICK
TOUCH START TIG

4. ARC CONTROL:

The ARC CONTROL WIRE/STICK dial is active in the WIRE, STICK and DOWN HILL PIPE modes, and has different functions in these modes. This control is not active in the TIG mode.

CC-STICK mode: In this mode, the ARC CONTROL dial sets the short circuit current (arc-force) during stick welding to adjust for a soft or crisp arc. Increasing the number from -10 (soft) to +10(crisp) increases the short circuit current and prevents sticking of the electrode to the plate while welding. This can also increase spatter. It is recommended that the ARC CONTROL be set to the minimum number without electrode sticking. Start with a setting at 0.

DOWNHILL PIPE MODE: In this mode, the ARC CONTROL dial sets the short circuit current (arc force) during stick welding to adjust for a soft or a more forceful digging arc (crisp). Increasing the number from -10(soft) to +10(crisp) increases the short circuit current which results in a more forceful digging arc. Typically a forceful digging arc is preferred for root and hot passes. A softer arc is preferred for fill and cap passes where weld puddle control and deposition (“stacking” of iron) are key to fast travel speeds. It is recommended that the ARC CONTROL be set initially at 0.

CV-WIRE mode: In this mode, turning the ARC CONTROL clockwise from –10 (soft) to +10 (crisp) changes the arc from soft and washed-in to crisp and narrow. It acts as an inductance control. The proper setting depends on the procedure and operator preference. Start with a setting at 0.

5. WELD OUTPUT TERMINALS WITH FLANGE NUT:

Provides a connection point for the electrode and work cables.

6. GROUND STUD:

Provides a connection point for connecting the machine case to earth ground for the safest grounding procedure.

7. 14 PIN CONNECTOR:

For attaching wire feeder control cables to the RANGER® 305G. Includes contactor closure circuit , auto-sensing remote control circuit, and 120V and 42V power. The remote control circuit operates the same as the 6 Pin Amphenol.

8. 6 PIN CONNECTOR:

For attaching optional remote control equipment. When in the CC-STICK, PIPE, and CV-WIRE modes and when a remote control is connected to the Amphenol, the auto-sensing circuit in the RANGER® 305G automatically switches the OUTPUT control from control at the welder to remote control.

When using the TOUCH START TIG® mode with a TIG Module connected to the RANGER® 305G, the OUTPUT control on the front of the RANGER® 305G is used to set the maximum current range of the CURRENT CONTROL on the TIG Module.

9. WELD TERMINALS CONTROL SWITCH:

In the WELD TERMINALS ON position, the output is electrically hot all the time. In the REMOTELY CONTROLLED position, the output is controlled by a wire feeder or amptrol device, and is electrically off until a remote switch is depressed.

10. WIRE FEEDER VOLTMETER SWITCH:

Matches the polarity of the wire feeder voltmeter to the polarity of the electrode.

ENGINE CONTROLS:

11. RUN/STOP SWITCH - RUN position energizes the engine prior to starting. STOP position stops the engine. The oil pressure interlock switch prevents battery drain if the switch is left in the RUN position and the engine is not operating.

12. CHOKE - When pulled out, it closes the choke valve on the engine carburetor for quick starting.

13. START PUSH BUTTON - Energizes the starter motor to crank the engine.

14. IDLER SWITCH

- Has two positions as follows:

1) In the HIGH position, the engine runs at the high idle speed controlled by the engine governor.
2) In the AUTO position, the idler operates as follows:

- When switched from HIGH to AUTO or after starting the engine, the engine will operate at full speed for approximately 12 seconds and then go to low idle speed.
- When the electrode touches the work or power is drawn for lights or Tools (approximately 100 Watts minimum), the engine accelerates and operates at full speed.
- When welding ceases or the AC power load is turned off, a fixed time delay of approximately 12 seconds starts. If the welding or AC power Load is not restarted before the end of the time delay, the idler reduces the engine speed to low idle speed.
- The engine will automatically return to high idle speed when there is welding load or AC power load reapplied.

15. HOUR METER

The hour meter displays the total time that the engine has been running. This meter is useful for scheduling prescribed maintenance.

STARTING AND STOPPING THE ENGINE

- Remove all plugs connected to the AC power receptacles.
- Set IDLER switch to AUTO.
- Set the RUN/STOP switch to RUN.
- Pull the choke to the full out position.
- Press and hold the engine START button until the engine starts.
- Release the engine START button when the engine starts.
- Push the choke back in.
- The engine will run at high idle speed for approximately 12 seconds and then go to low idle speed. Allow the engine to warm up at low idle for several minutes before applying a load and/or switching to high idle. Allow a longer warm up time in cold weather.

⚠ CAUTION

Operating the starter motor for more than 5 seconds can damage the motor. If the engine fails to start, release the switch and wait 10 seconds before operation the starter again. Do NOT push the START button while the engine is running because this can damage the ring gear and/or the starter motor.

NOTE: When starting a RANGER® 305LPG for the first time, or after and extended period of time of not operating, it will take longer than normal because the fuel pump has to fill the fuel line and carburetor.

STOPPING

Remove all welding and auxiliary power loads and allow the engine to run at low idle speed for a few minutes to cool the engine.

Stop the engine by placing the RUN-STOP in the STOP position.

NOTE: A fuel shut off valve is not required on the RANGER® 305LPG because the fuel tank is mounted below the engine.

WELDER OPERATION

DUTY CYCLE

Duty Cycle is the percentage of time the load is being applied in a 10 minute period. For Example, a 60% duty cycle represents 6 minutes of load and 4 minutes of no load in a 10 minute period.

DC STICK WELDING

The RANGER® 305LPG can be used with a broad range of DC stick electrodes.
The MODE switch provides two stick welding settings as follows:

CONSTANT CURRENT (CC-STICK) WELDING

The CC-STICK position of the MODE switch is designed for horizontal and vertical-up welding with all types of electrodes, especially low hydrogen. The output CONTROL dial adjusts the full output range for stick welding.

The ARC CONTROL knob sets the short circuit current during stick welding (arc-force). Increasing the number from -10 to +10 increases the short circuit current and prevents sticking of the electrode to the plate while welding. This can also increase spatter. It is recommended that the ARC CONTROL be set to the minimum number without electrode sticking. Start with the dial set at 0.

DOWN HILL PIPE WELDING

This slope controlled setting is intended for "out-of-position" and "down hill" pipe welding where the operator would like to control the current level by changing the arc length. The output CONTROL dial adjusts the full output range for pipe welding.

The ARC CONTROL knob sets the short circuit current during stick welding (arc-force). Increasing the number from -10 to +10 increases the short circuit current and prevents sticking of the electrode to the plate while welding. This can also increase spatter. It is recommended that the ARC CONTROL be set to the minimum number without electrode sticking. Start with the dial set at 0.

TYPICAL RANGER® 305LPG FUEL CONSUMPTION	
	Kohler CH7305 lbs./hrs (Kg/hr)
Low Idle - No Load 2400 R.P.M.	2.59 (1.17)
High Idle - No Load 3700 R.P.M.	4.58 (2.08)
DC Weld Output 300 Amps @ 25 Volts	8.80 (3.99)
Auxiliary Power 9,000 Watts	9.22 (4.18)

TIG WELDING

The TOUCH START TIG setting of the MODE switch is for DC TIG (Tungsten Inert Gas) welding. To initiate a weld, the CONTROL dial is first set to the desired current and the tungsten is touched to the work. During the time the tungsten is touching the work there is very little voltage or current and in general, no tungsten contamination. Then, the tungsten is gently lifted off the work in a rocking motion, which establishes the arc.

The ARC CONTROL is not active in the TIG mode. To STOP a weld, simply pull the TIG torch away from the work. When the arc voltage reaches approximately 30 Volts the arc will go out and the machine will reset the current to the Touch Start level. To reinitiate the arc, re touch the tungsten to the work and lift. Alternatively, the weld can be stopped by releasing the Amptrol or arc start switch.

The RANGER® 305LPG can be used in a wide variety of DC TIG welding applications. In general the 'Touch Start' feature allows contamination free starting without the use of a Hi-frequency unit. If desired, the K930-2 TIG Module can be used with the RANGER® 305LPG. The settings are for reference.

RANGER® 305LPG settings when using the K930-2 TIG Module with an Amptrol or Arc Start Switch:

- Set the MODE Switch to the TOUCH START TIG setting.
- Set the "IDLER" Switch to the "AUTO" position.
- Set the "WELDING TERMINALS" switch to the "REMOTELY CONTROLLED" position. This will keep the "Solid State" contactor open and provide a "cold" electrode until the Amptrol or Arc Start Switch is pressed.

When using the TIG Module, the OUTPUT control on the RANGER® 305LPG is used to set the maximum range of the CURRENT CONTROL on the TIG module or an Amptrol if connected to the TIG Module.

WIRE WELDING-CV

Connect a wire feeder to the RANGER® 305LPG according to the instructions in INSTALLATION INSTRUCTIONS Section.

The RANGER® 305LPG in the CV-WIRE mode, permits it to be used with a broad range of flux cored wire (Innershield and outreached) electrodes and solid wires for MIG welding (gas metal arc welding). Welding can be finely tuned using the ARC CONTROL. Turning the ARC CONTROL clockwise from –10 (soft) to +10 (crisp) changes the arc from soft and washed-in to crisp and narrow. It acts as an inductance control. The proper setting depends on the procedure and operator preference. Start with the dial set at 0.

Listed below are some wires suitable for use on this machine:

- Innershield - NR-311, NS-3M, NR-207, NR-203 Ni 1%, NR-212.
- outreached - 0S-70, 0S-71M, 0S-71 ELITE.
- Solid wires for MIG welding - .035 (0.9 mm), and .045 (1.1 mm), Super Arc L-50 and L-56, .035 (0.9 mm) and .045 (1.1 mm) Blue Max MIG 308 lw.

Contact your local authorized Lincoln Electric Distributor or the Lincoln Electric Company for specific wires used on certain applications with this machine.

TYPICAL CURRENT RANGES (1) FOR TUNGSTEN ELECTRODES(2)

Tungsten Electrode Diameter in. (mm)		DDENE (-)	DAZE (+)	Approximate Argon Gas Flow Flow Rate C.F.H. (l /min.)				TIG TORCH Nozzle Size (4), (5)
		1%, 2% Thoriated Tungsten	1%, 2% Thoriated Tungsten	Aluminum		Stainless Steel		
.010	(.25)	2-15	(3)	3-8	(2-4)	3-8	(2-4)	#4, #5, #6
0.020	(.50)	5-20	(3)	5-10	(3-5)	5-10	(3-5)	
0.040	(1.0)	15-80	(3)	5-10	(3-5)	5-10	(3-5)	
1/16	(1.6)	70-150	10-20	5-10	(3-5)	9-13	(4-6)	#5, #6
3/32	(2.4)	150-250	15-30	13-17	(6-8)	11-15	(5-7)	#6, #7, #8
1/8	(3.2)	250-400	25-40	15-23	(7-11)	11-15	(5-7)	
5/32	(4.0)	400-500	40-55	21-25	(10-12)	13-17	(6-8)	#8, #10
3/16	(4.8)	500-750	55-80	23-27	(11-13)	18-22	(8-10)	
1/4	(6.4)	750-1000	80-125	28-32	(13-15)	23-27	(11-13)	

(1) When used with argon gas. The current ranges shown must be reduced when using argon/helium or pure helium shielding gases.
(2) Tungsten electrodes are classified as follows by the American Welding Society (AWS):

Pure	EWP
1% Thoriated	Esther
2% Thoriated	Esther

Though not yet recognized by the AWS, Ceriated Tungsten is now widely accepted as a substitute for 2% Thoriated Tungsten in AC and DC applications.
(3) DAZE is not commonly used in these sizes.
(4) TIG torch nozzle "sizes" are in multiples of thus of an inch:

# 4 = 1/4 in.	(6 mm)
# 5 = 5/16 in.	(8 mm)
# 6 = 3/8 in.	(10 mm)
# 7 = 7/16 in.	(11 mm)
# 8 = _ in.	(12.5 mm)
#10 = 5/8 in.	(16 mm)

(5) TIG torch nozzles are typically made from alumina ceramic. Special applications may require lava nozzles, which are less prone to breakage, but cannot withstand high tem-

ARC GOUGING

The RANGER® 305LPG can be used for limited arc gouging. For optimal performance, set the MODE switch to CC-STICK and the ARC CONTROL to +10.

Set the CONTROL knob to adjust output current to the desired level for the gouging electrode being used according to the ratings in the following table.

Carbon Diameter	Current Range (DC, electrode Positive)
1/8"	60-90 Amps
5/32"	90-150 Amps
3/16"	200-250 Amps

AUXILIARY POWER:

Start the engine and set the IDLER control switch to the desired operating mode. Full power is available regardless of the welding control settings providing no welding current is being drawn.

The auxiliary power of the RANGER® 305LPG consists of two 20 Amp-120 VAC GFCI (5-20R) duplex receptacles and one 50 Amp 120/240 VAC (14-50R) receptacle. The 240 VAC receptacle can be split for single phase 120 VAC operation. See the **"MAINTENANCE SECTION"** for detailed information on testing and resetting the GFCI receptacle.

The auxiliary power capacity is 10,000 watts Peak, 9,000 Watts continuous of 60 Hz, single phase power. The auxiliary power capacity rating in watts is equivalent to volt-amperes at unity power factor. The max permissible current of the 240 VAC output is 40 Amps. The 240 VAC output can be split to provide two separate 120 VAC outputs with a max permissible current of 40 Amps per output to two separate 120 VAC branch circuits (these circuits cannot be paralleled). Output voltage is within ± 10% at all loads up to rated capacity. All auxiliary power is protected by circuit breakers.

The 120 V auxiliary power receptacles should only be used with three wire grounded type plugs or approved double insulated tools with two wire plugs. The current rating of any plug used with the system must be at least equal to the current capacity of the associated receptacle.

NOTE: The 240 V receptacle has two circuits, each of which measure 120V to neutral but are of opposite polarities and cannot be paralleled.

Simultaneous Welding and Auxiliary Power Loads

The above auxiliary power ratings are with no welding load. Simultaneous welding and power loads are specified in the following table. The permissible currents shown assume that current is being drawn from either the 120 VAC or 240 VAC supply (not both at the same time).

RANGER® 305LPG Simultaneous Welding and Power Loads

Welding Output-Amps	Permissible Power-Watts (Unity Power Factor)	Permissible Auxiliary Current in -Amps	
		@120 VAC *	@ 240 VAC
0	9000	74**	37
100	7600	70**	35
150	6500	60**	30
200	5300	50**	25
250	3800	36	18
300	1700	16	8

* Each duplex receptacle is limited to 20 amps.

** Not to exceed 40A per 120 VAC branch circuit when splitting the 240 VAC output.

RANGER® 305LPG Extension Cord Length Recommendations

(Use the shortest length extension cord possible sized per the following table.)

Current (Amps)	voltam-meters	Load (Watts)	Maximum Allowable Cord Length in ft. (m) for Conductor Size											
			14 AWG		12 AWG		10 AWG		8 AWG		6 AWG		4 AWG	
15	120	1800	30	(9)	40	(12)	75	(23)	125	(38)	175	(53)	300	(91)
20	120	2400			30	(9)	50	(15)	88	(27)	138	(42)	225	(69)
15	240	3600	60	(18)	75	(23)	150	(46)	225	(69)	350	(107)	600	(183)
20	240	4800			60	(18)	100	(30)	175	(53)	275	(84)	450	(137)
37	240	9000					53	(16)	96	(29)	160	(49)	239	(73)

Conductor size is based on maximum 2.0% voltage drop.

OPTIONS/ACCESSORIES AND COMPATIBLE LINCOLN EQUIPMENT

K957-1 HEAVY DUTY, TWO WHEEL TRAILER FOR SMALL WELDERS
For road, off-road and in-plant and yard towing. (For highway use, consult applicable federal, state and local laws regarding requirements for brakes, lights, fenders, etc.). Order:

K2635-1 Trailer
K2639-1 Fender & Light Kit
K2640-1 Cable Storage Rack

K1737-1 FOUR WHEEL ALL-TERRAIN UNDERCARRIAGE For moving by hand at construction sites. Heavy duty puncture resistant pneumatic tires.

K1770-1 UNDERCARRIAGE (FACTORY)
For moving by hand on a smooth surface. Heavy duty puncture resistant pneumatic tires & front caster, One or two gas cylinders can be mounted on the rear of the undercarriage with the installation of K1745-1 Cylinder Holder(s).

K1739-1 CABLE CARRIER KIT
For use on K1737-1 and K1770-1 Undercarriages.

K1745-1 WELDING GAS CYLINDER LOX TANK HOLDER
For use on K1770-1 Undercarriage. One or two may be installed on an undercarriage.

K2361-1 LPG TANK HOLDER KIT
Mounts to K1745-1 Gas Cylinder holder to secure LPG tank.

K1788-1 ROLL CAGE - Gives added damage protection.

K886-2 CANVAS COVER - Protects machine when not in use.

K1898-1 SPARK ARRESTOR
Mounts inside exhaust pipe.

K704 ACCESSORY SET - Includes 35 ft.(10.6m) of electrode cable and 30 ft.(9.1m) of work cable, head-shield, work clamp electrode holder. Cables are rated at 400 amps, 100% duty cycle.

K857 25 ft.(7.6m) or **K857-1** 100 ft.(30.5m) **REMOTE CONTROL**
Portable control provides same dial range as the output control on the welder. Has a convenient 6 pin plug for easy connection to the welder.

K802N POWER PLUG KIT
Provides four 120 volt plugs rated at 20 amps each and one dual voltage, full KVA plug rated at 120/240 volts, 50 amps.

K802R POWER PLUG KIT
Provides four 120 volt plugs rated at 15 amps each and one dual voltage, full KVA plug rated at 120/240 volts, 50 amps.

T12153-9 50 AMP, 120/240 V POWER PLUG

K1816-1 FULL KVA ADAPTER KIT
Plugs into the 120/240V NEMA 14-50R receptacle on the case front (which accepts 4-prong plugs) and converts it to a NEMA 6-50R receptacle, (which accepts 3-prong plugs.)

TIG Welding
K1783-9 TIG Torch PTA-26V (25ft.)
K963-3 Hand Amptrol
K870 Foot Amptrol
KP509 Magnum Parts Kit

Spool Gun
K487-25 Magnum Spool Gun
K488 Magnum Control Module

K691-10 Input Cable)

SAFETY PRECAUTIONS

⚠ WARNING

- **Have qualified personnel do all maintenance and troubleshooting work.**
- **Turn the engine off before working inside the machine or servicing the engine.**
- **Remove guards only when necessary to perform maintenance and replace them when the maintenance requiring their removal is complete. If guards are missing from the machine, obtain replacements from a Lincoln Distributor. (See Operating Manual Parts List.)**

Read the Safety Precautions in the front of this manual and in the Engine Owner's Manual before working on this machine.

Keep all equipment safety guards, covers, and devices in position and in good repair. Keep hands, hair, clothing, and tools away from the gears, fans, and all other moving parts when starting, operating, or repairing the equipment.

Routine Maintenance

At the end of each day's use, make certain that the valve on the LPG fuel supply cylinder is closed. Also, check the crankcase oil level and add oil if indicated.

KOHLER ENGINE

FREQUENCY	MAINTENANCE REQUIRED
Daily or Before Starting Engine	• Check oil level. • Check air cleaner for dirty, loose, or damaged parts. • Check air intake and cooling areas, clean as necessary.
5 Hours	First Oil Change
Every 25 Hours	• Service air pre-cleaner..
Every 100 Hours	• Change engine oil. (1)
Every 100 Hours	• Clean or replace air filter element. (1)
Every 100 Hours	• Spark Arrester
Every 200 Hours	• Replace oil filter. (1)
Every 200 Hours	• Check spark plug and gap
Every 2 Years	• Check fuel lines and clamps.

(1) Service more frequently when used in dusty areas and/or at high ambient temperatures.

ENGINE MAINTENANCE COMPONENTS

ITEM	MAKE AND PART NUMBER KOHLER CH23S ENGINE
Oil Filter	Kohler 12 050 01, Fram PH8172
Air Filter Element	Kohler 47 083 03, Fram CA79
Air Filter Pre-Cleaner	Kohler 24 083 02
Spark Plug	Champion RC12YC (.030" Gap)
Battery	BCI Group 58 (435 CCA)

Engine Oil Change

Drain the oil while the engine is warm to assure rapid and complete draining.

- Remove the oil filler cap and dipstick. Remove the yellow cap from the oil drain valve and attach the flexible drain tube supplied with the machine. Push in and twist the drain valve counterclockwise. Pull the valve out and drain the oil into a suitable container.
- Close the drain valve by pushing in and twisting clockwise. Replace the yellow cap.
- Refill to the upper limit mark on the dipstick with the recommended oil. Tighten the oil filler cap securely.

Engine Oil Refill Capacities

Without oil filter replacement:
- 1.7 US qt. (1.4 Imp qt., 1.6 liter)-Kohler

With oil filter replacement:
- 2.0 US qt. (1.7 Imp qt., 1.9 liter)-Kohler

Use 4-stroke motor oil that meets or exceeds the requirements for APIO service classification SG or SH. Always check the APIO SERVICE label on the oil container to be sure it includes the letters SG or SH.
SAE 10W-30 is recommended for general, all-temperature use, -5 F to 104 F (-20 C to 40 C). For the Onan engine, it is recommended that SAE 30 oil be used above 82 F (27 C).

See Engine Owner's Manual for more specific information on oil viscosity recommendations.
Wash your hands with soap and water after handling used oil.

Please dispose of used motor oil in a manner that is compatible with the environment. We suggest you take it in a sealed container to your local service station or recycling center for reclamation. Do not throw it in the trash, pour it on the ground or down a drain.

Oil Filter Change

- Drain the engine oil.
- Remove the oil filter, and drain the oil into a suitable container. Discard the used oil filter.
- Clean the filter mounting base, and coat the gasket of the new oil filter with clean engine oil.
- Screw on the new oil filter by hand, until the gasket contacts the filter mounting base, then use an oil filter socket tool to tighten the filter an additional 1/2 to 7/8 turn.
- Refill the crankcase with the specified amount of the recommended oil. Reinstall the oil filler cap.
- Start the engine and check for oil filter leaks.
- Stop the engine, and check the oil level. If necessary, add oil to the upper limit mark on the dipstick.

Air Cleaner Service

A dirty air cleaner will restrict air flow to the carburetor. To prevent carburetor malfunction, service the air cleaner regularly. Service more frequently when operating the engine in extremely dusty areas.

⚠ WARNING

Never use gasoline or low flash point solvents for cleaning the air cleaner element. A fire or explosion could result.

⚠ CAUTION

Never run the engine without the air cleaner. Rapid engine wear will result from contaminants, such as dust and dirt being drawn into the engine.

Air Pre-cleaner Service

- Loosen the cover retaining knob and remove the cover.
- Remove the pre-cleaner from the paper element.
- Wash the pre-cleaner in warm water with detergent. Rinse the pre-cleaner thoroughly until all traces of detergent are eliminated. Squeeze out excess water (do not wring). Allow the pre-cleaner to air dry.
- Saturate the pre-cleaner with new engine oil. Squeeze out all excess oil.
- Reinstall the pre-cleaner over the paper element.
- Reinstall the air cleaner cover. Secure cover with the cover retaining knob.

AIR FILTER PAPER ELEMENT

- Loosen the cover retaining knob and remove the cover.
- Remove the pre-cleaner from the paper element.
- Remove the element cover nut, element cover, and paper element.
- Do not wash the paper element or use pressurized air, as this will damage the element. Replace a Dirty, bent, or damaged element with a new element. Handle new elements carefully; do not use if the sealing surfaces are bent or damaged.
- When servicing the air cleaner, check the air cleaner base. Make sure it is secured and not bent or damaged. Also check the element cover for damaged or improper fit. Replace all damaged air cleaner components.

NOTE: Before air cleaner is reassembled make sure rubber seal is in position around stud. Inspect, making sure it is not damaged and seals with the element cover.

- Reinstall the paper element, pre-cleaner, element cover, element cover nut, and air cleaner cover. Secure cover with the cover retaining knob.

SPARK PLUG

To ensure proper engine operation, the spark plug must be properly gapped and free of deposits.

⚠ WARNING

NOTE: Before removing spark plug, the muffler becomes very hot during operation and remains hot for a while after stopping the engine. Be careful not to touch the muffler while it is hot.

Spark Plug Service

To ensure proper engine operation, the spark plug must be properly gapped and free of deposits.

- Remove the spark plug cap.
- Clean any dirt from around the spark plug base.
- Use a plug wrench to remove the spark plug.
- Visually inspect the spark plug. Discard them if the insulator is cracked or chipped. Clean the spark plug with a wire brush if it is to be reused.
- Measure the plug gap with a feeler gauge. Correct as necessary by bending the side electrode.
- Check that the spark plug washer is in good condition and thread the spark plug in by hand to prevent cross-threading.
- After the spark plug is seated, tighten with a spark plug wrench to compress the washer.
- If installing a new spark plug, tighten 1/2 turn after the spark plug seats to compress the washer.
- If reinstalling a used spark plug, tighten 1/8 - 1/4 turn after the spark plug seats to compress the washer.

Spark Plug Gap: .030 in. (0.76 mm)-Kohler

Spark Plug Torque: 20 ft. Lb. (27 N-m)-Kohler

⚠ CAUTION

The spark plug must be securely tightened. An improperly tightened spark plug can become very hot and may cause engine damage.
Use only the recommended spark plug or equivalent. A spark plug which has an improper heat range may cause engine damage.

ENGINE ADJUSTMENT

OVERSPEED IS HAZARDOUS

The maximum allowable high idle speed for this machine is 3750 RPM, no load. Do NOT tamper with governor components or setting or make any other adjustments to increase the maximum speed. Severe personal injury and damage to the machine can result if operated at speeds above maximum.

Adjustments to the engine are to be made only by a Lincoln Service Center or an authorized Field Service Shop.

BATTERY MAINTENANCE

To access the battery, Remove the 2 screws from the rear battery tray using a screwdriver or a 3/8" socket. Slide the battery tray out only far enough to access the battery terminals.

⚠ WARNING

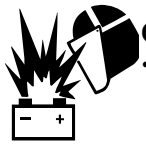

GASES FROM BATTERY can explode.
- **Keep sparks, flame and cigarettes away from battery.**

To prevent EXPLOSION when:

- **INSTALLING A NEW BATTERY — disconnect negative cable from old battery first and connect to new battery last.**
- **CONNECTING A BATTERY CHARGER — remove battery from welder by disconnecting negative cable first, then positive cable and battery clamp. When reinstalling, connect Negative cable last. Keep well ventilated.**
- **USING A BOOSTER — connect positive lead to battery first then connect negative lead to negative battery lead at engine foot.**

BATTERY ACID can burn eyes and skin.
- **Wear gloves and eye protection and be careful when working near battery.**

- **Follow instructions printed on battery.**

CLEANING THE BATTERY

Keep the battery clean by wiping it with a damp cloth when dirty. If the terminals appear corroded, disconnect the battery cables and wash the terminals with an ammonia solution or a solution of 1/4 pound (0.11kg) of baking soda and 1 quart (0.1 L) of water. Be sure the battery vent plugs (if equipped) are tight so that none of the solution enters the cells.

After cleaning, flush the outside of the battery, the battery compartment, and surrounding areas with clear water. Coat the battery terminals lightly with petroleum jelly or a non-conductive grease to retard corrosion.
Keep the battery clean and dry. Moisture accumulation on the battery can lead to more rapid discharge and early battery failure.

CHECKING THE ELECTROLYTE LEVEL

If battery cells are low, fill them to the neck of the filler hole with distilled water and recharge. If one cell is low, check for leaks.

CHARGING THE BATTERY

When you charge, jump, replace, or otherwise connect battery cables to the battery, be sure the polarity is correct. Improper polarity can damage the charging circuit. The RANGER® 305LPG positive (+) battery terminal has a red terminal cover.

If you need to charge the battery with an external charger, disconnect the negative cable first, then the positive cable before you attach the charger leads. After the battery is charged, reconnect the positive battery cable first and the negative cable last. Failure to do so can result in damage to the internal charger components. Follow the instructions of the battery charger manufacturer for proper charger settings and charging time.

SERVICING OPTIONAL SPARK ARRESTOR

⚠ WARNING

- **MUFFLER MAY BE HOT**

- **ALLOW ENGINE TO COOL BEFORE INSTALLING THE SPARK ARRESTER!**

- **DO NOT OPERATE ENGINE WHILE INSTALLING THE SPARK ARRESTER!**

Clean every 100 hours.

Welder/Generator Maintenance

STORAGE: Store the RANGER® 305LPG in clean, dry protected areas.

CLEANING: Blow out the generator and controls periodically with low pressure air. Do this at least once a week in particularly dirty areas.

BRUSH REMOVAL AND REPLACEMENT: It's normal for the brushes and slip rings to wear and darken slightly. Inspect the brushes when a generator overhaul is necessary.

⚠ CAUTION

Do not attempt to Polish slip rings while the engine is running.

⚠ WARNING

Service and Repair should only be performed by Lincoln Electric Factory Trained Personnel. Unauthorized repairs performed on this equipment may result in danger to the technician and machine operator and will invalidate your factory warranty. For your safety and to avoid Electrical Shock, please observe all safety notes and precautions.

GFCI TESTING AND RESETTING PROCEDURE

The GFCI should be properly tested at least once every month or whenever it is tripped. To properly test and reset the GFCI :

- If the GFCI has tripped, first carefully remove any load and check it for damage.
- If the equipment has been shut down, it must be restarted.
- The equipment needs to be operating at high idle speed and any necessary adjustments made on the control panel so that the equipment is providing at least 80 volts to the receptacle input terminals.
- The circuit breaker for this receptacle must not be tripped. Reset if necessary.
- Push the "Reset" button located on the GFCI. This will assure normal GFCI operation.
- Plug a night-light (with an "ON/OFF" switch) or other product (such as a lamp) into the Duplex receptacle and turn the product "ON".
- Push the "Test" button located on the GFCI. The night-light or other product should go "OFF".
- Push the "Reset" button, again. The light or other product should go "ON" again.

If the light or other product remains "ON" when the "Test" button is pushed, the GFCI is not working properly or has been incorrectly installed (miswired). If your GFCI is not working properly, contact a qualified, certified electrician who can assess the situation, rewire the GFCI if necessary or replace the device.

HOW TO USE TROUBLESHOOTING GUIDE

⚠ WARNING

Service and Repair should only be performed by Lincoln Electric Factory Trained Personnel. Unauthorized repairs performed on this equipment may result in danger to the technician and machine operator and will invalidate your factory warranty. For your safety and to avoid Electrical Shock, please observe all safety notes and precautions detailed throughout this manual.

This Troubleshooting Guide is provided to help you locate and repair possible machine malfunctions. Simply follow the three-step procedure listed below.

Step 1. LOCATE PROBLEM (SYMPTOM).
Look under the column labeled “PROBLEM (SYMPTOMS)”. This column describes possible symptoms that the machine may exhibit. Find the listing that best describes the symptom that the machine is exhibiting.

Step 2. POSSIBLE CAUSE.
The second column labeled “POSSIBLE CAUSE” lists the obvious external possibilities that may contribute to the machine symptom.

Step 3. RECOMMENDED COURSE OF ACTION
This column provides a course of action for the Possible Cause, generally it states to contact your local Lincoln Authorized Field Service Facility.

If you do not understand or are unable to perform the Recommended Course of Action safely, contact your local Lincoln Authorized Field Service Facility.

⚠ CAUTION

If for any reason you do not understand the test procedures or are unable to perform the tests/repairs safely, contact your **Local Lincoln Authorized Field Service Facility** for technical troubleshooting assistance before you proceed.

Observe all Safety Guidelines detailed throughout this manual

PROBLEMS (SYMPTOMS)	POSSIBLE CAUSE	RECOMMENDED COURSE OF ACTION
Major Physical or Electrical Damage is Evident.	**1. Contact your local Lincoln Authorized Field Service Facility.**	If all recommended possible areas of misadjustment have been checked and the problem persists, **Contact your local Lincoln Authorized Field Service Facility.**
Engine will not "crank".	1. Battery is low. Charge Battery. 2. Loose battery cable connections. Inspect, clean and tighten. 3. Faulty engine starter motor. 4. “Battery Circuit” circuit breaker is tripped.	
Engine will "crank" but not start.	1. LPG Fuel Cylinder Empty. 2. Faulty fuel solenoid or faulty PC board or ignition system.	
Engine shuts down shortly after starting.	1. Low oil level. Change oil and oil filter And fill to proper level. Start engine And look for leaks. 2. Faulty oil pressure switch or other engine component. 3. Low fuel level.	
Battery does not stay charged.	1. Faulty battery, replace. 2. Loose connections at battery or alternator. Clean and tighten connections. 3. Faulty engine alternator or charger module.	

⚠ CAUTION

If for any reason you do not understand the test procedures or are unable to perform the tests/repairs safely, contact your **Local Lincoln Authorized Field Service Facility** for technical troubleshooting assistance before you proceed.

Observe all Safety Guidelines detailed throughout this manual

PROBLEMS (SYMPTOMS)	POSSIBLE CAUSE	RECOMMENDED COURSE OF ACTION
Engine will not idle down to low speed.	1. Idler switch in High idle position. Set switch to Auto. 2. External load on welder or auxiliary power. Remove all external loads. 3. Faulty PC board or idler solenoid.	If all recommended possible areas of misadjustment have been checked and the problem persists, **Contact your local Lincoln Authorized Field Service Facility.**
Engine will not go to high idle when attempting to weld.	1. Poor work lead connection to work. Make sure work clamp is tightly connected to clean base metal. 2. "Contactor" switch is in wrong position. Set to "Welding On" when welding without a control cable. Refer to Operations chapter for proper use of this switch. 3. Faulty PC board. Low idle speed set to low.	
Engine will not go to high idle when using auxiliary power.	1. Auxiliary power load is less than 100 watts. Idler may not respond with less than a 100 watt load. Set idler to "High". 2. Faulty PC board.	
Engine does not develop full power.	1. Air filter clogged, clean or replace. 2. Fouled spark plugs, clean or replace. 3. Valves out of adjustment.	

⚠ CAUTION

If for any reason you do not understand the test procedures or are unable to perform the tests/repairs safely, contact your **Local Lincoln Authorized Field Service Facility** for technical troubleshooting assistance before you proceed.

Observe all Safety Guidelines detailed throughout this manual

PROBLEMS (SYMPTOMS)	POSSIBLE CAUSE	RECOMMENDED COURSE OF ACTION
No welding power output.	1. Poor work lead connection to work. Make sure work clamp is tightly connected to clean base metal. 2. "Weld Terminals" switch in wrong position. Place switch in "Weld Terminals On" position when welding without control cable. 3. Faulty PC board or welder alternator.	If all recommended possible areas of misadjustment have been checked and the problem persists, **Contact your local Lincoln Authorized Field Service Facility.**
Welder has output but no control.	1. Poor remote/control cable connection to 6 pin or 14 pin Amphenol connector. Check connections. 2. Faulty remote cable or faulty wire feeder or wire feeder cable. Replace if necessary. 3. Faulty control potentiometer or PC board.	
Wire feeder does not work when control cable is connected to 14 pin Connector.	1. Wire Feeder Power circuit breaker open. Check 42V and 120V beakers and reset if tripped. 2. Faulty control cable. Repair or replace cable. 3. Faulty wire feeder.	
No auxiliary power.	1. Open circuit breakers. Reset breakers. If breakers keep tripping, reduce power draw. 2. Faulty connections to auxiliary receptacles. Check connections. 3. GFCI tripped. Clear any ground fault and reset GFCI circuit by pressing "Reset" button on the 120 V receptacle. 4. Breakers worn out or not contacting slip rings. 5. Rotor field winding not receiving flashing current from P.C. board. 6. Open field winding on rotor.	

⚠ CAUTION

If for any reason you do not understand the test procedures or are unable to perform the tests/repairs safely, contact your **Local Lincoln Authorized Field Service Facility** for technical troubleshooting assistance before you proceed.

Observe all Safety Guidelines detailed throughout this manual

PROBLEMS (SYMPTOMS)	POSSIBLE CAUSE	RECOMMENDED COURSE OF ACTION
The welding arc is “cold.” The welding arc is not stable or is not satisfactory. The engine runs normally. The auxiliary power is normal.	1. Make sure the MODE selector switch is in the correct position for the process being used. (For example, CV-WIRE, PIPE, CC-STICK.) 2. Make sure the electrode (wire, gas, voltage, current etc.) is correct for the process being used. 3. Check for loose or faulty connections at the weld output terminals and welding cable connections. 4. The welding cables may be too long or coiled, causing an excessive voltage drop.	If all recommended possible areas of misadjustment have been checked and the problem persists, **Contact your local Lincoln Authorized Field Service Facility.**

⚠ CAUTION

If for any reason you do not understand the test procedures or are unable to perform the tests/repairs safely, contact your **Local Lincoln Authorized Field Service Facility** for technical troubleshooting assistance before you proceed.

WITH OPTIONAL K857 REMOTE CONTROL

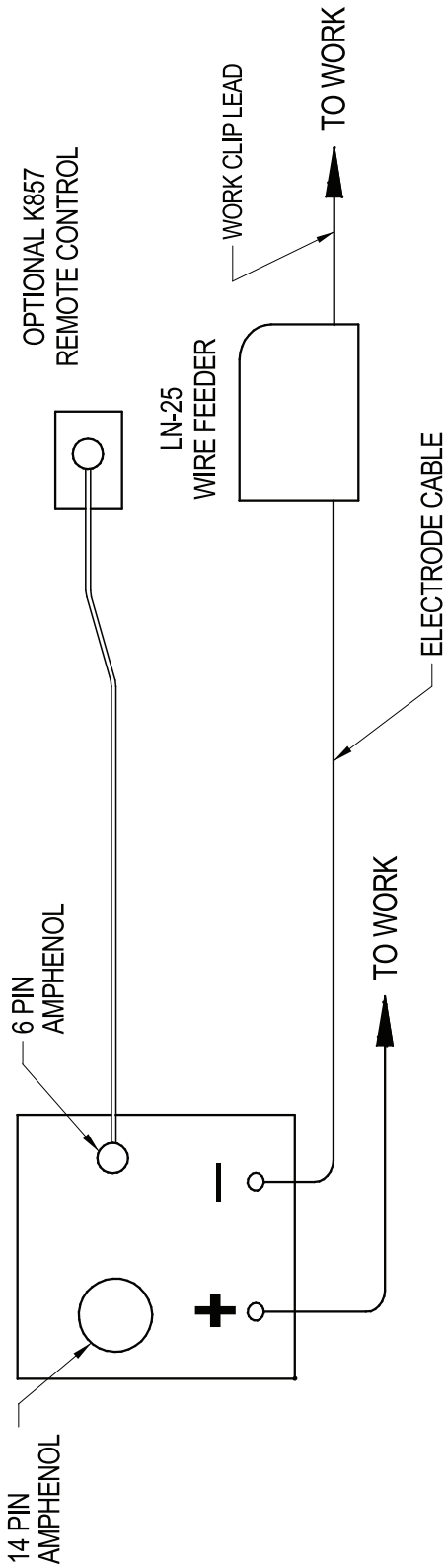

N.A. WELDING CABLES MUST BE OF PROPER CAPACITY FOR THE CURRENT AND DUTY CYCLE OF IMMEDIATE AND FUTURE APPLICATIONS. SEE OPERATING MANUAL.

N.B. CONNECT WELDING CABLES TO OUTPUT STUDS FOR DESIRED POLARITY. POSITION THE WIRE FEEDER VOLTMETER SWITCH TO MATCH THE POLARITY OF THE ELECTRODE CABLE.

N.C. PLACE THE MODE SWITCH IN THE “CV-WIRE” POSITION.

N.D. PLACE THE WELDING TERMINALS SWITCH IN THE “WELD TERMINALS ON” POSITION.

N.E. PLACE IDLER SWITCH IN “AUTO” OR “HIGH” IDLE POSITION AS DESIRED.

10-27-2000

S24787-1

ENGINE WELDERS /LN-25 ACROSS THE ARC CONNECTION DIAGRAM WITH OPTIONAL K444-1 REMOTE CONTROL

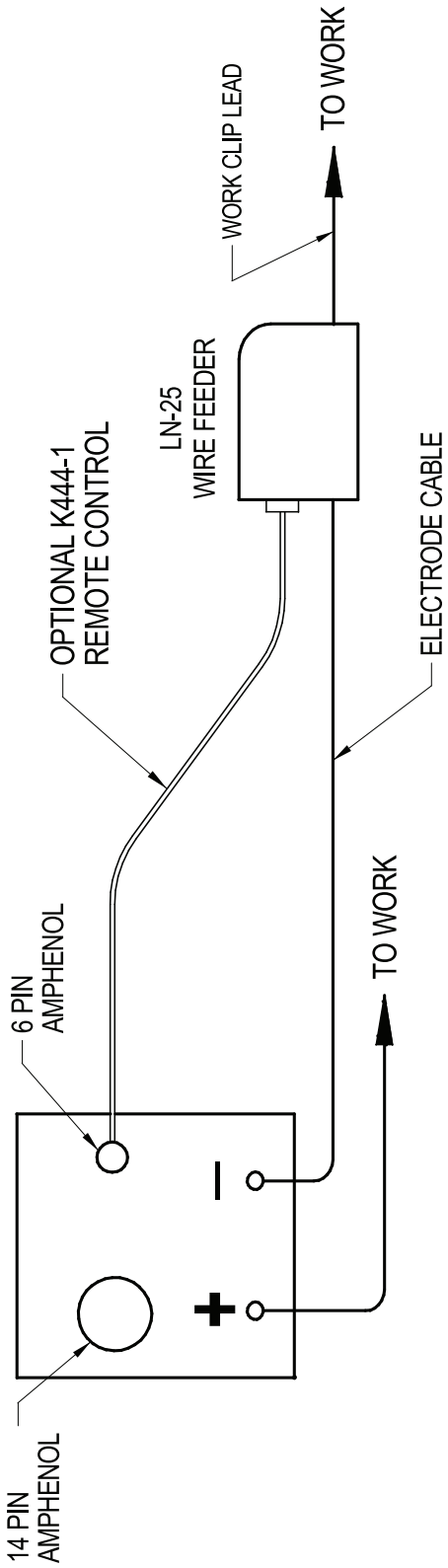

N.A. WELDING CABLES MUST BE OF PROPER CAPACITY FOR THE CURRENT AND DUTY CYCLE OF IMMEDIATE AND FUTURE APPLICATIONS. SEE OPERATING MANUAL.

N.B. CONNECT WELDING CABLES TO OUTPUT STUDS FOR DESIRED POLARITY. POSITION THE WIRE FEEDER VOLTMETER SWITCH TO MATCH THE POLARITY OF THE ELECTRODE CABLE.

N.C. PLACE THE MODE SWITCH IN THE "CV-WIRE" POSITION.

N.D. PLACE THE WELDING TERMINALS SWITCH IN THE "WELD TERMINALS ON" POSITION.

N.E. PLACE IDLER SWITCH IN "AUTO" OR "HIGH" IDLE POSITION AS DESIRED.

10-27-2000

S24787-2

ENGINE WELDERS /LN-25 WITH K624-1 42 VOLT REMOTE OUTPUT CONTROL MODULE CONNECTION DIAGRAM

⚠ WARNING

- Do not operate with panels open.
- Disconnect NEGATIVE (-) Battery lead before servicing.
- Do not touch electrically live parts.

- Keep guards in place.
- Keep away from moving parts.
- Only qualified personnel should install,use or service this equipment.

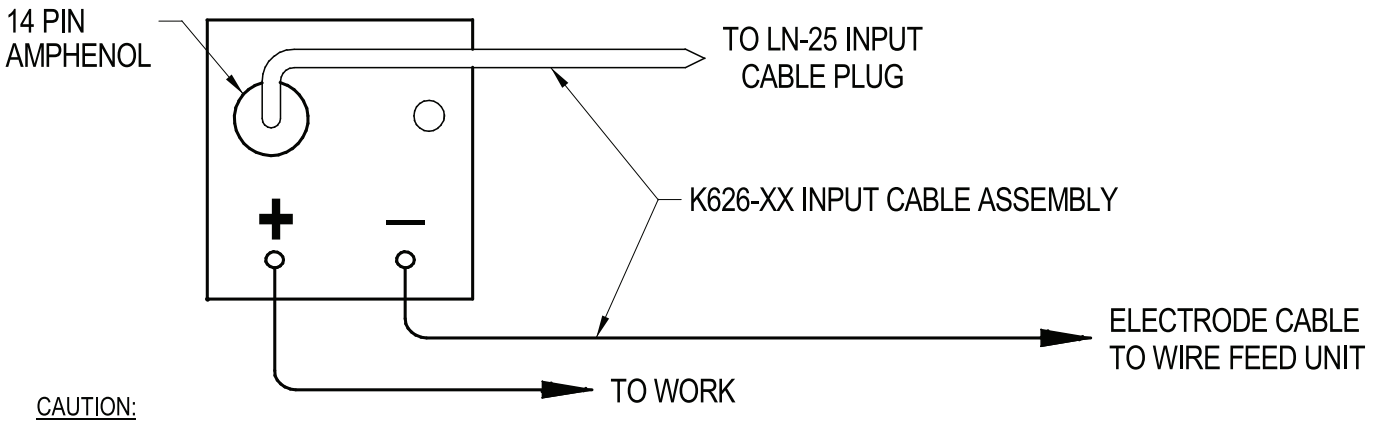

CAUTION:

ANY INCREASE OF THE HIGH IDLE ENGINE RPM BY CHANGING THE GOVERNOR SETTING OR OVERRIDING THE THROTTLE LINKAGE WILL CAUSE AN INCREASE IN THE AC WIRE FEEDER VOLTAGE, WHICH CAN DAMAGE THE CONTROL CIRCUIT. THE ENGINE GOVERNOR SETTING IS PRE-SET AT THE FACTORY – DO NOT ADJUST ABOVE RPM SPECIFICATIONS LISTED IN THE ENGINE WELDER OPERATING MANUAL.

N.A. PLACE THE MODE SWITCH IN THE "CV-WIRE" POSITION. PLACE WELDER TERMINALS SWITCH TO "REMOTELY CONTROLLED" POSITION.
N.B. CONNECT WELDING CABLES TO OUTPUT STUDS FOR DESIRED POLARITY. POSITION THE WIRE FEEDER VOLTMETER SWITCH TO MATCH THE POLARITY OF THE ELECTRODE CABLE.
N.C. WELDING CABLES MUST BE OF PROPER CAPACITY FOR THE CURRENT AND DUTY CYCLE OF IMMEDIATE AND FUTURE APPLICATIONS. SEE OPERATING MANUAL.
N.D. PLACE IDLER SWITCH IN "AUTO" OR "HIGH" IDLE POSITION AS DESIRED.

10-27-2000

S24787-3

ENGINE WELDERS TO K867 CONTROL CABLE ADAPTER CONNECTION DIAGRAM

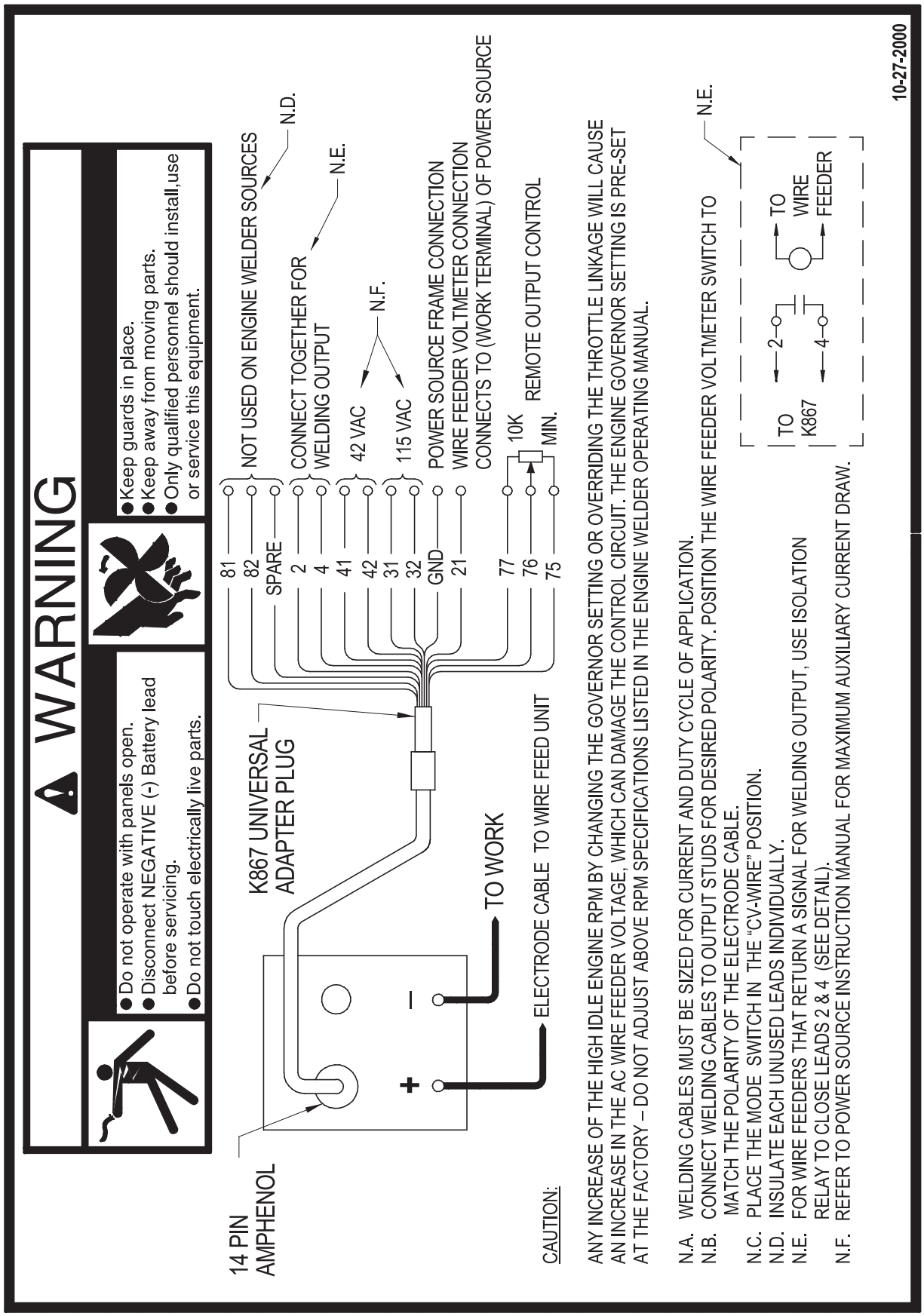

ENGINE WELDERS / K691-10 / K488 / K487 SPOOL GUN CONNECTION DIAGRAM

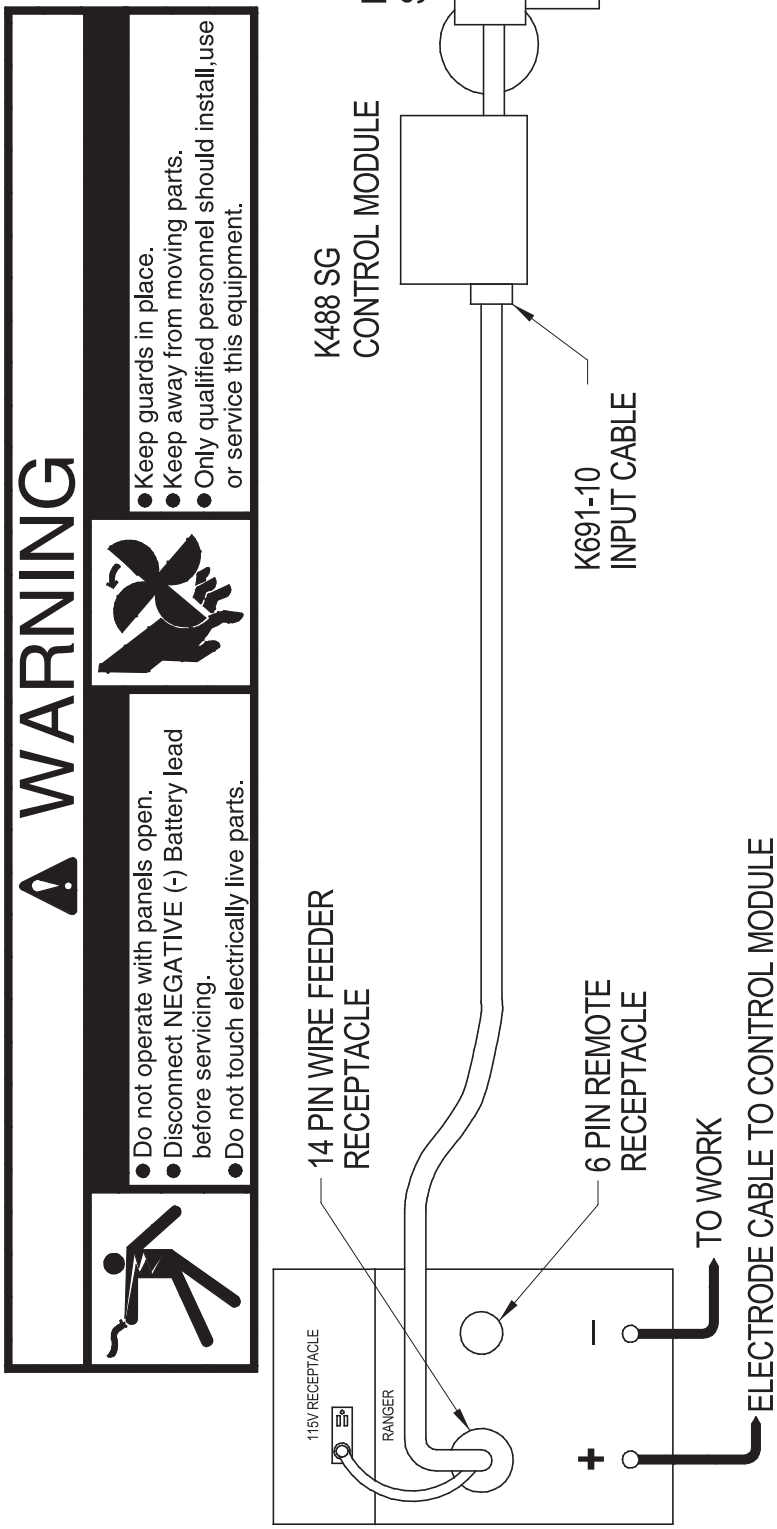

CAUTION: BE SURE THAT CONTROL MODULE MODE SWITCH IS IN THE "LINCOLN" (CONTACT CLOSURE) POSITION BEFORE ATTEMPTING TO OPERATE CONTROL MODULE. INCORRECT SWITCH POSITION COULD RESULT IN DAMAGE TO THE CONTROL MODULE AND/OR POWER SOURCE.

ANY INCREASE OF THE HIGH IDLE ENGINE RPM BY CHANGING THE GOVERNOR SETTING OR OVERRIDING THE THROTTLE LINKAGE WILL CAUSE AN INCREASE IN THE AC WIRE FEEDER VOLTAGE, WHICH CAN DAMAGE THE CONTROL CIRCUIT. THE ENGINE GOVERNOR SETTING IS PRE-SET AT THE FACTORY – DO NOT ADJUST ABOVE RPM SPECIFICATIONS LISTED IN THE ENGINE WELDER OPERATING MANUAL.

N.A. WELDING CABLES MUST BE SIZED FOR CURRENT AND DUTY CYCLE OF APPLICATION.
N.B. CONNECT WELDING CABLES TO OUTPUT STUDS FOR DESIRED POLARITY.
N.C. PLACE THE MODE SWITCH IN THE "CV-WIRE" POSITION. PLACE WELDING TERMINALS SWITCH TO "REMOTELY CONTROLLED" POSITION.
N.D. PLACE IDLER SWITCH IN "HIGH" IDLE POSITION.

10-27-2000

S24787-8

ENGINE WELDERS / K930 TIG MODULE / CONNECTION DIAGRAM

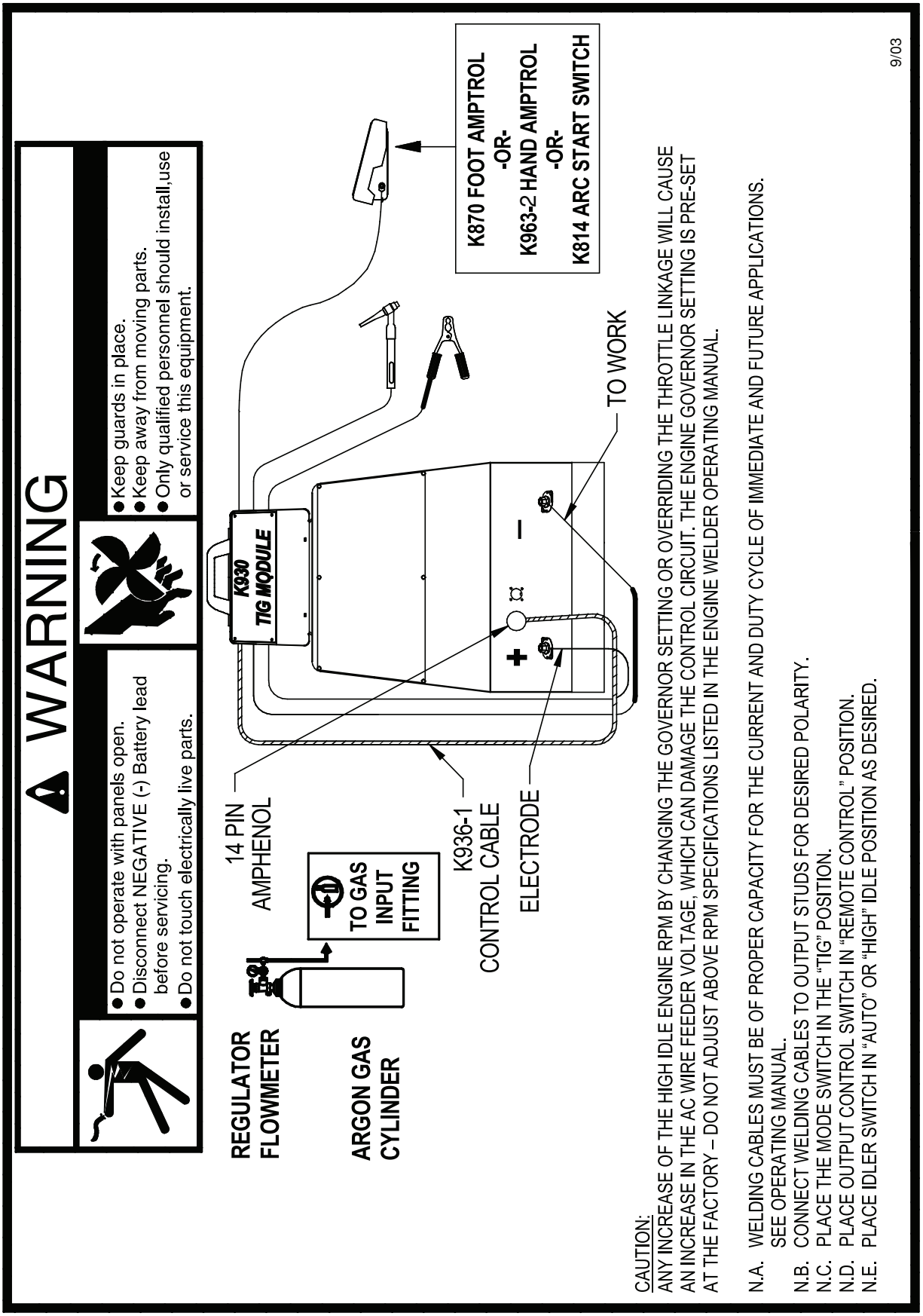

FOR CODE 12269

RANGER 305 LPG - WIRING DIAGRAM

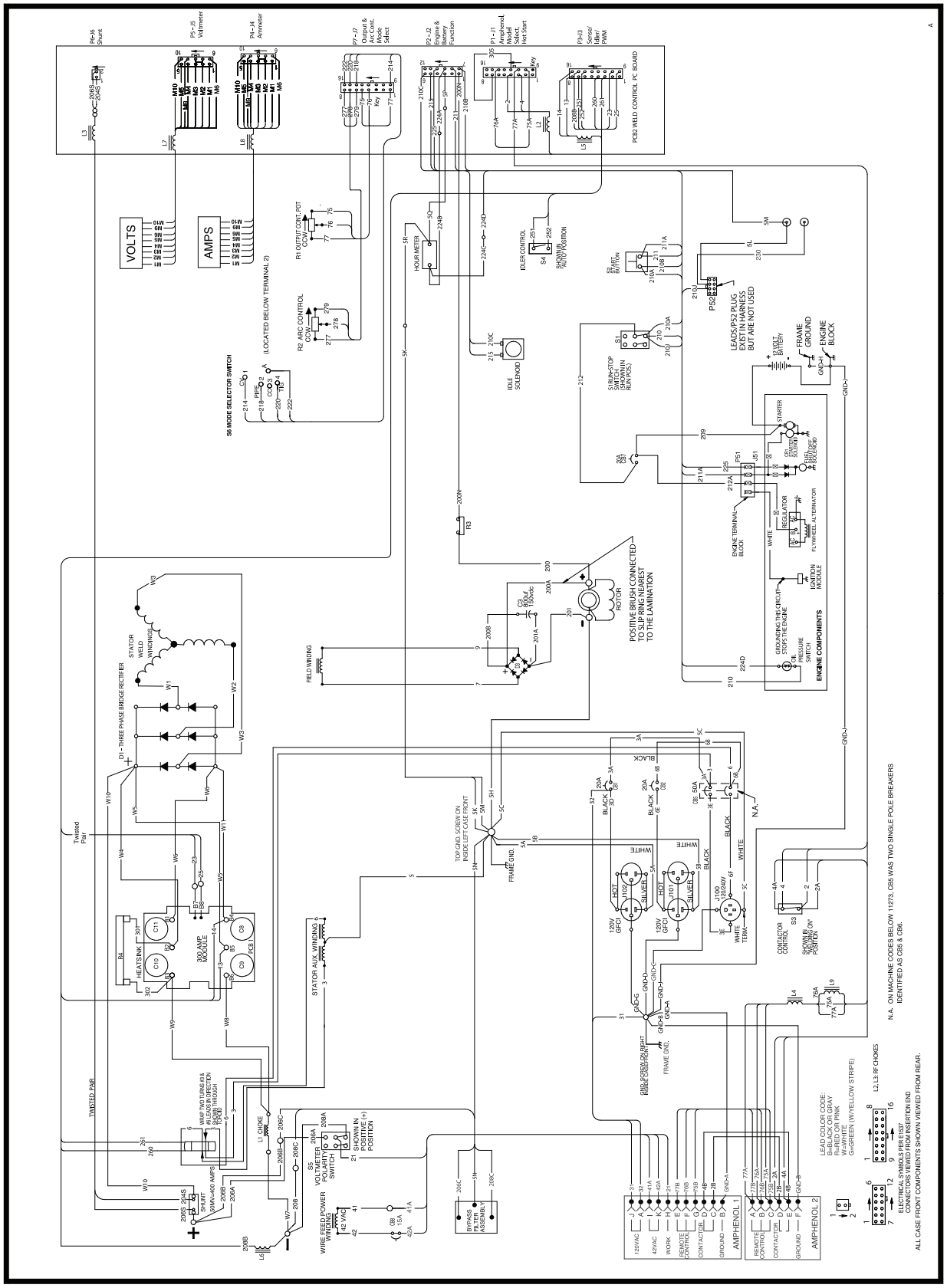

NOTE: This diagram is for reference only. It may not be accurate for all machines covered by this manual. The specific diagram for a particular code is pasted inside the machine on one of the enclosure panels. If the diagram is illegible, write to the Service Department for a replacement. Give the equipment code number.

FOR CODE 13173

RANGER 305 LPG - WIRING DIAGRAM

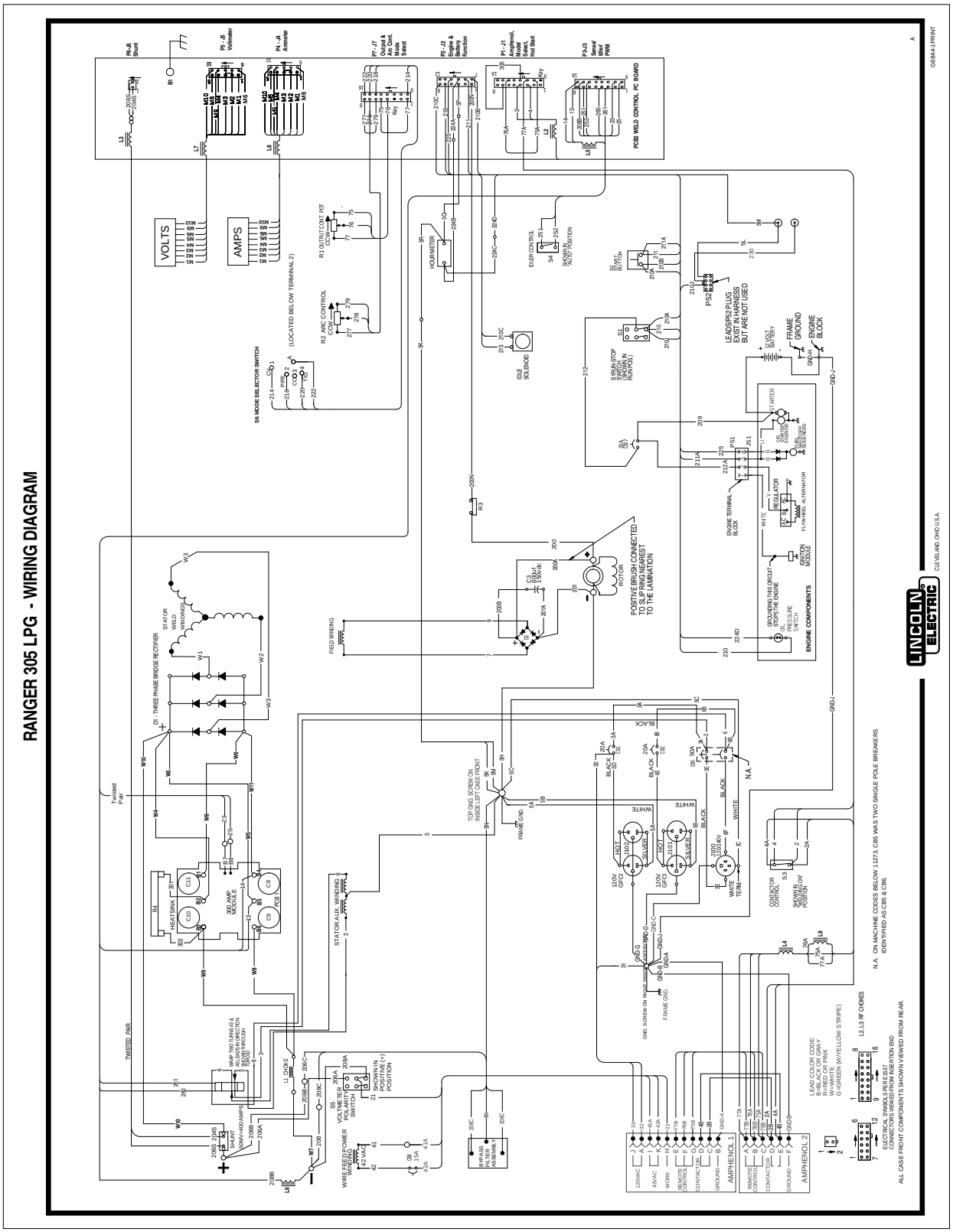

NOTE: This diagram is for reference only. It may not be accurate for all machines covered by this manual. The specific diagram for a particular code is pasted inside the machine on one of the enclosure panels. If the diagram is illegible, write to the Service Department for a replacement. Give the equipment code number.

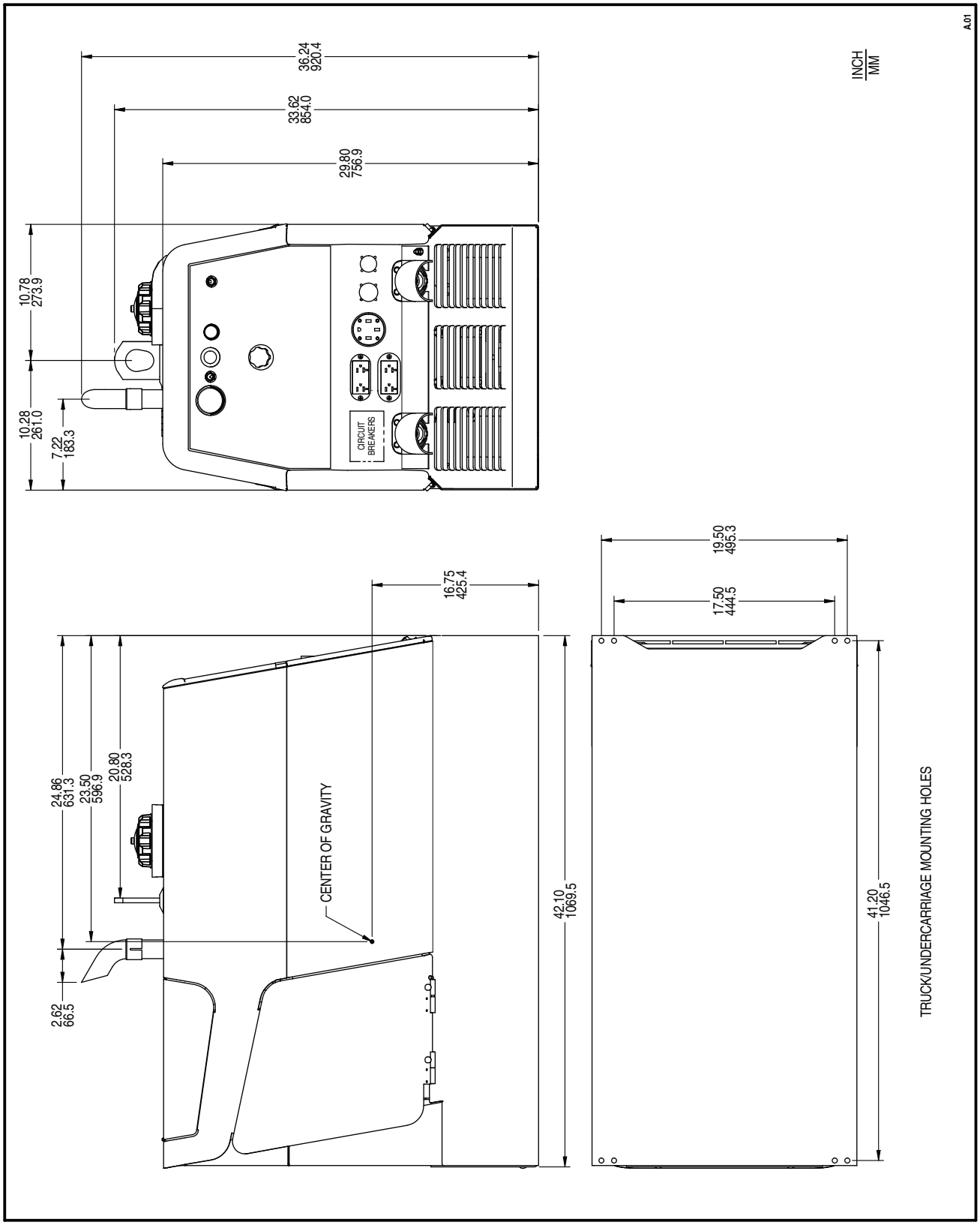
M22449
A.01
INCH
MM
36.24
920.4
33.62
854.0
29.80
756.9
10.78
273.9
10.28
261.0
7.22
183.3
CIRCUIT
BREAKERS
19.50
495.3
17.50
444.5
16.75
425.4
24.86
631.3
23.50
596.9
20.80
528.3
2.62
66.5
CENTER OF GRAVITY
42.10
1069.5
41.20
1046.5
TRUCK/UNDERCARRIAGE MOUNTING HOLES

Service Navigator 2.0

Ranger 305LPG - 12669

Index of Sub Assemblies - 12669

KEY	PART NUMBER	DESCRIPTION	QTY
	P-1110-A	INDEX OF SUB ASSEMBLIES	AR
1	P-1110-C	CASE FRONT ASSEMBLY - UPPER	AR
2	P-1110-D	CASE FRONT ASSEMBLY - LOWER	AR
3	P-1110-E	BASE ASSEMBLY & BATTERY	AR
4	P-1110-F	ENGINE ASSEMBLY	AR
5	P-1110-G	BLOWER BAFFLE ASSEMBLY	AR
6	P-1110-H	STATOR/ROTOR ASSEMBLY	AR
7	P-1110-J	COVERS & CASE BACK ASSEMBLY	AR

Printed 01/11/2017 at 10:51:41. Produced by Enigma.

Index of Sub Assemblies - 12669

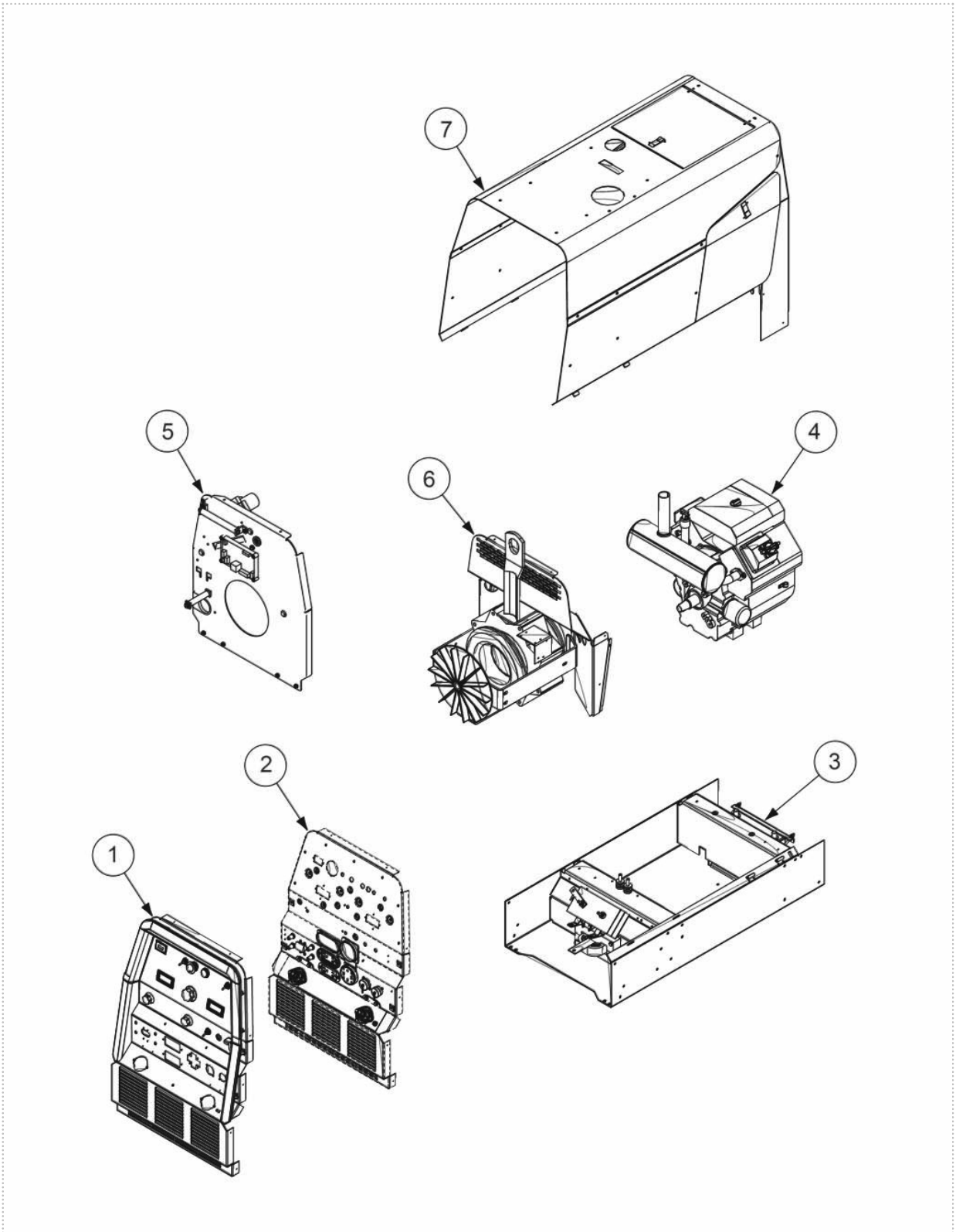

P-1110-A.jpg

Printed 01/11/2017 at 10:51:41. Produced by Enigma.

Case Front Assembly - Upper

KEY	PART NUMBER	DESCRIPTION	QTY
	9SG3666-50	CASE FRONT ASSEMBLY	1
1A	9SG3860-8	CASE FRONT	1
3A	9SG3593	TOP BEZEL	1
	9SS24738-1	SCREWS FOR THERMOPLASTICS	7
4A	9SG3594-1	RIGHT BEZEL	1
	9SS24738-1	SCREWS FOR THERMOPLASTICS	2
5A	9SG3594-2	LEFT BEZEL	1
	9SS24738-1	SCREWS FOR THERMOPLASTICS	2
8A	9SS7525-21	CHOKE CONTROL	1
	9SS25335	CHOKE CABLE BUSHING	1
	9SS9262-120	PLAIN WASHER	1
9	9SS13146-1	START BUTTON	1
23	9SG6855	NAMEPLATE	1
25	9SM22778-3	KNOB	1
	9ST13483-7	O RING 011	2
	9SG6828	HARNESS ASBLY	1
27A	9ST10800-36	SWITCH-TOGGLEDPDT	1
27B	9ST10800-38	SWITCH-TOGGLE	1
	9SS22061-4	SEALING BOOT	4
33	9SM22778-2	KNOB 1.5"	2
34	9SL15792	NAMEPLATE FRONT DOOR	1
35A	9SL11185	FRONT DOOR ASBLY	1
	9ST12584-6	RIVET	2
37	9SS21033	DOOR LATCH	1
38A	9SS24659	CATCH BRACKET	1
	9SS8025-98	SELF TAPPING SCREW	2
41	9SS17475-8	HOUR METER DIGITAL SNAP-IN	1
	9SM19685-24	CONNECTOR & LEAD ASBLY	1
50A	9ST10800-38	SWITCH-TOGGLE	1
50B	9ST10800-39	SWITCH-TOGGLE	1
	9SM19685-30	CONNECTOR & LEAD ASBLY	1
51A	9SS16670-10	ROTARY SWITCH	1
51B	9ST10812-119	POTENTIOMETER	2
51C	9SS18280	POTENTIOMETER SPACER	2

Printed 01/11/2017 at 10:51:41. Produced by Enigma.

Case Front Assembly - Upper

KEY	PART NUMBER	DESCRIPTION	QTY
52A	9SL11160	METER HOUSING ASBLY	2
52B	9SS24630	METER HOUSING SEAL	2
52C	9SM19368	METER BEZEL	2
	9ST14807-9	FILTER LENS	2
52E	9SCF000389	#4-40X.375SS-PPNHS-FULL-GR2-3147	4
	9SCF000005	#6-32HN	4
	9SS9262-3	PLAIN WASHER	4
	9SS9225-68	THREAD FORMING SCREW (CUTTING)	4
	9SM19452-4	OPERATION DECAL	1

Printed 01/11/2017 at 10:51:41. Produced by Enigma.

Case Front Assembly - Upper

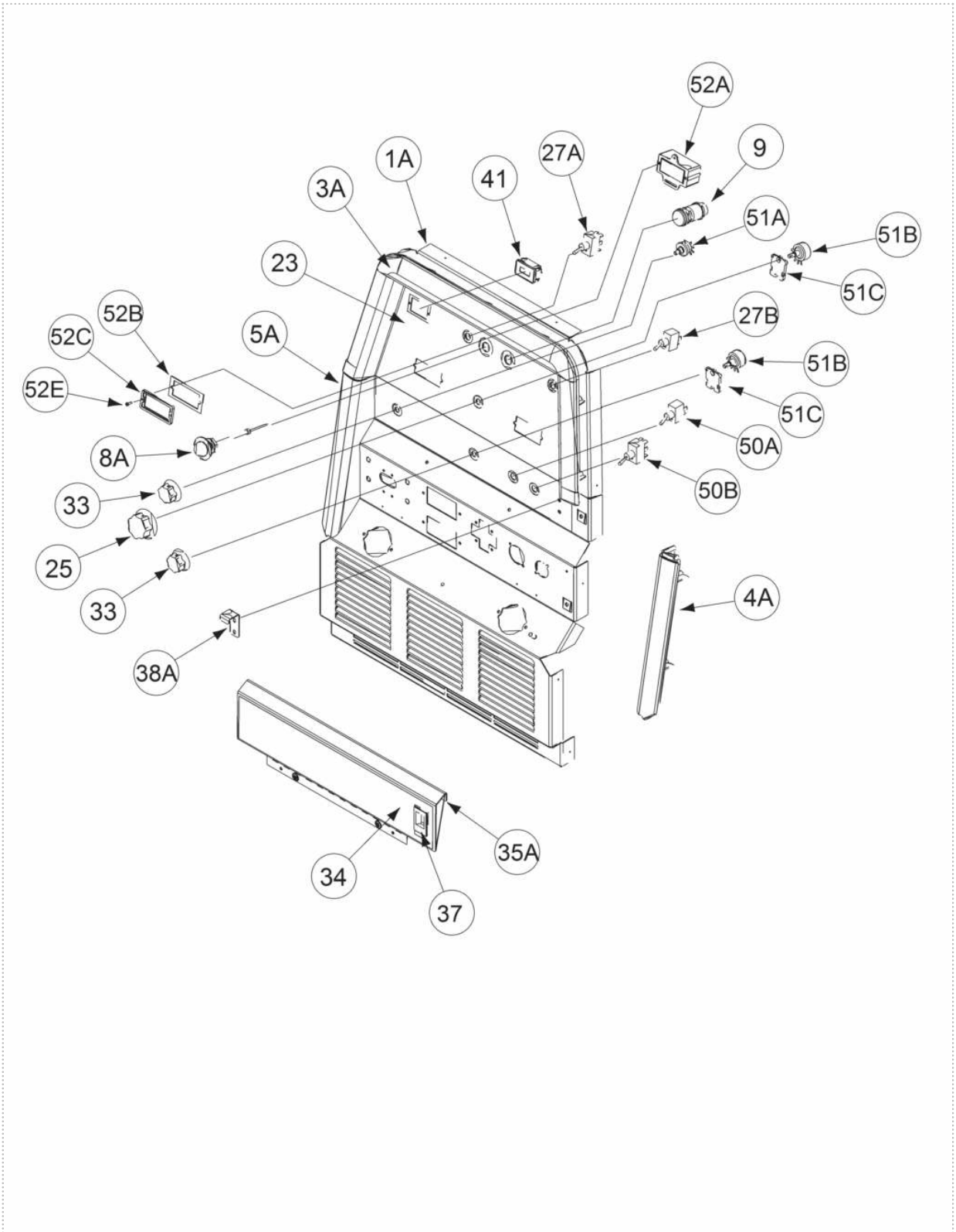

P-1110-C.jpg

Printed 01/11/2017 at 10:51:41. Produced by Enigma.

Case Front Assembly - Lower

KEY	PART NUMBER	DESCRIPTION	QTY
7A	9ST14166-9	OUTPUT TERMINAL KIT	2
7B	9ST3960	FLANGE NUT	2
7C	9SS8025-91	SELF TAPPING SCREW	4
7D	9SCF000344	HEX HD SCREW	1
7E	9SS9262-1	PLAIN WASHER	1
7F	9SE106A-15	LOCKWASHER	1
11A	9SM20585	CIRCUIT BREAKER 50A 2 POLE	1
11B	9SS24911-2	COVER CIRCUIT BREAKER 2 POLE	1
	9ST10082-30	SEMS SCREW	4
	9ST4291-A	LOCKWASHER	4
13	9ST12287-38	CIRCUIT BREAKER	3
14	9ST12287-37	CIRCUIT BREAKER	1
15	9SS22061-2	SEALING BOOT	4
16	9SM18861	RECEPTACLE COVER	1
17A	9SS18907-2	RECEPTACLE-SINGLE	1
	9ST9695-3	LOCKWASHER	4
	9SCF000042	#8-32HN	4
18	9SS21088	RECEPTACLEGASKET	2
19	9SM16996	RECEPTACLE COVER	2
20A	9SS24410-2	RECEPTACLE DUPLEX GFCI	2
20B	9SL13286	GFCI HOUSING	2
20C	9SS27167	MOUNTING BRACKET	2
20D	9SS24738-3	THERMOPLASTIC SCREW	4
	9SS27176	RECEPTACLE SEAL	2
21	9ST9187-1	1/4-20HJLN	1
22	9SCF000017	1/4-20HN	1
24	9SL12790-11	RATING PLATE	1
39	9SS8025-96	SELF TAPPING SCREW	4
40	9SS17062-11	CABLE CONNECTOR CAP	1
45	9SS17062-10	CABLE CONNECTOR CAP	1
49A	9SS24982	BYPASS FILTER ASBLY	1
	9SS9262-27	PLAIN WASHER	1
	9SE106A-1	LOCKWASHER	1
	9SCF000010	#10-24HN	1

Printed 01/11/2017 at 10:51:41. Produced by Enigma.

Case Front Assembly - Lower

KEY	PART NUMBER	DESCRIPTION	QTY
50A	9SS12021-70	BOX RECEPTACLE SOLID SHELL	1
50B	9SS12021-68	CONNECTOR	1
	9SS24097-4	SHUNT & LEAD ASBLY	1
	9SCF000344	HEX HD SCREW	1
	9SS9262-1	PLAIN WASHER	1
	9SE106A-15	LOCKWASHER	1
71A	9SS25669	OUTPUT STUD COVER PLATE	2
71B	9SS9225-68	THREAD FORMING SCREW (CUTTING)	4
72	9SM20007	OUTPUT STUD COVER	2

Printed 01/11/2017 at 10:51:41. Produced by Enigma.

Case Front Assembly - Lower

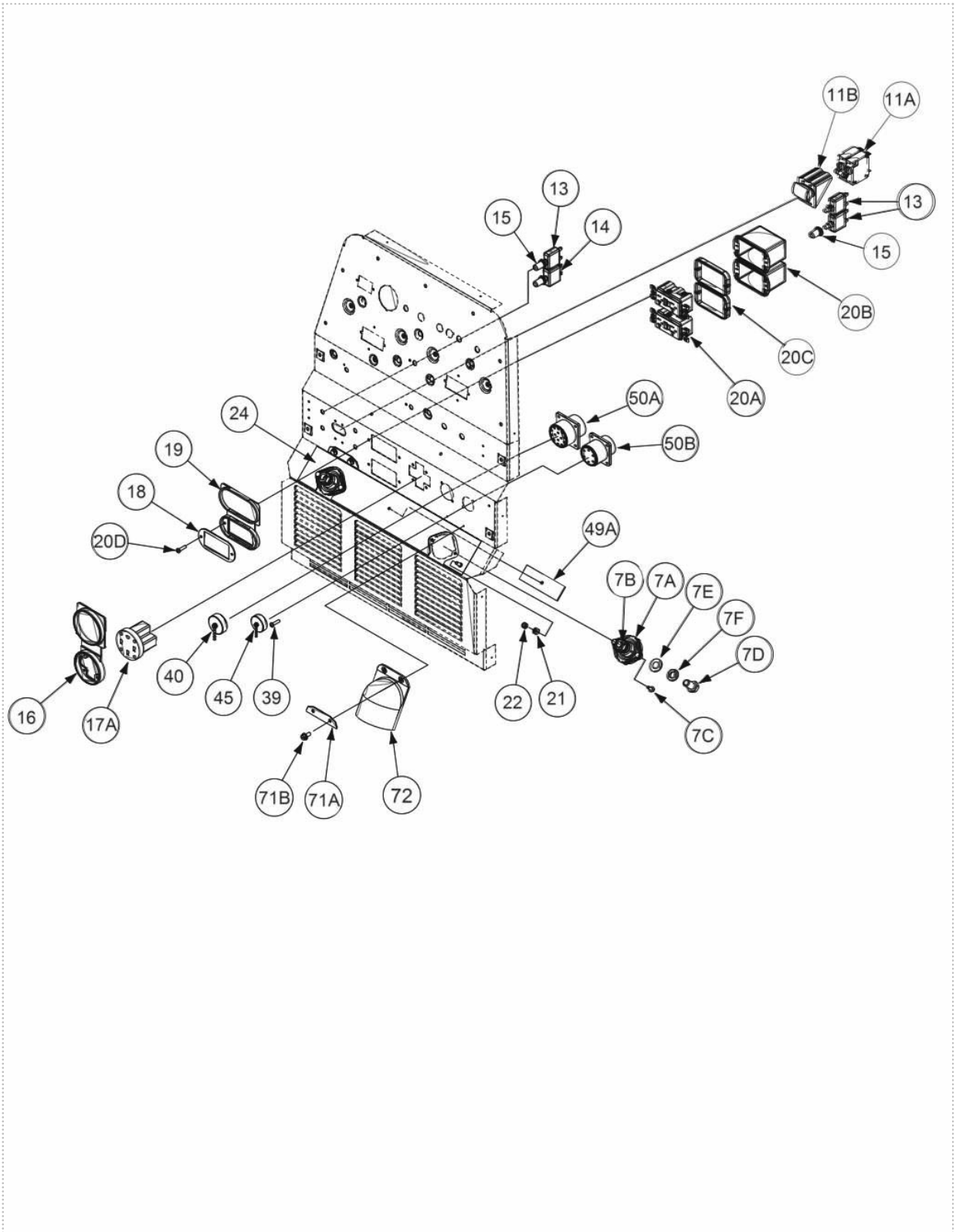

P-1110-D.jpg

Printed 01/11/2017 at 10:51:41. Produced by Enigma.

Base Assembly & Battery

KEY	PART NUMBER	DESCRIPTION	QTY
1A	9SG3870	BASE	1
1B	9SS24295-2	HINGE ASBLY	2
	9ST12584-12	BLIND RIVET	4
2A	9SL11147-2	ENGINE SUPPORT (KOHLER)	1
2B	9SS9225-68	THREAD FORMING SCREW (CUTTING)	8
	9SL11135-5	RECTIFIER CHOKE STATOR SUPPORT ASSEMB	1
3A	9SL11010-1	STATOR SUPPORT	1
3B	9SM19416	CHOKE ASBLY	1
3C	9SCF000187	5/16-18X2.50HHCS	3
3D	9SE106A-14	LOCKWASHER	3
	9SS9262-121	PLAIN WASHER	1
	9SCF000029	5/16-18HN	3
3G	9SL11132-3	THREE PHASE BRIDGE RECTIFIER	1
3H	9SE106A-14	LOCKWASHER	2
3J	9SS24344-1	RUBBER MOUNT	2
3K	9SCF000196	3/8-16X2.50HHB-FULL-GR5-1817/1	2
3L	9SS9262-113	PLAIN WASHER	6
3M	9SCF000067	3/8-16HN	4
	9SS9225-68	THREAD FORMING SCREW (CUTTING)	10
7	9SM9399-13	BATTERY	1
8A	9SS22018	BATTERY BRKT	1
	9SS8070-20	BATTERY CABLE	1
	9SS8070-11	BATTERY CABLE	1
	9ST14654	CAP-PLASTIC	1
	9SS20191-1	BATTERY TERMINAL COVER	1

Printed 01/11/2017 at 10:51:41. Produced by Enigma.

Base Assembly & Battery

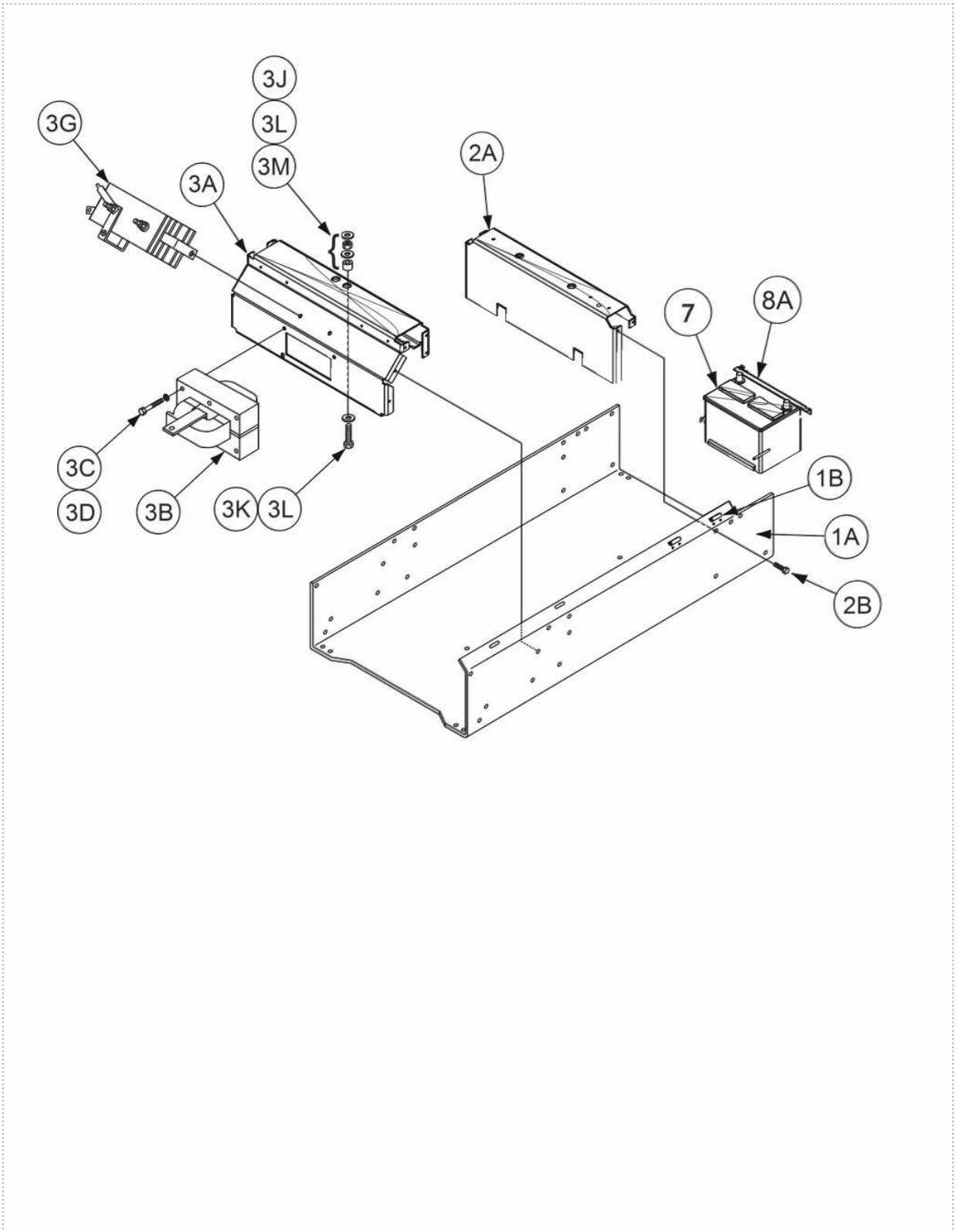

P-1110-E.jpg

Printed 01/11/2017 at 10:51:41. Produced by Enigma.

Engine Assembly

KEY	PART NUMBER	DESCRIPTION	QTY
1A	9SM21306	ENGINE	1
1B	9SS24344-1	RUBBER MOUNT	2
1C	9SCF000196	3/8-16X2.50HHB-FULL-GR5-1817/1	2
	9SS9262-120	PLAIN WASHER	2
1E	9SS9262-47	PLAIN WASHER	4
1F	9SE106A-16	LOCKWASHER	2
	9SCF000067	3/8-16HN	2
2A	9SG3574-4	MUFFLER ASBLY	1
2B	9SM16999-1	GASKET-EXHAUST MANIFOLD	2
	9SM16980-1	OUTLET PIPE ELBOW	1
	9SS20462	SPARK ARRESTOR CLAMP	1
	9SM18995-1	LPG FUEL HOSE ASBLY	1

Printed 01/11/2017 at 10:51:41. Produced by Enigma.

Engine Assembly

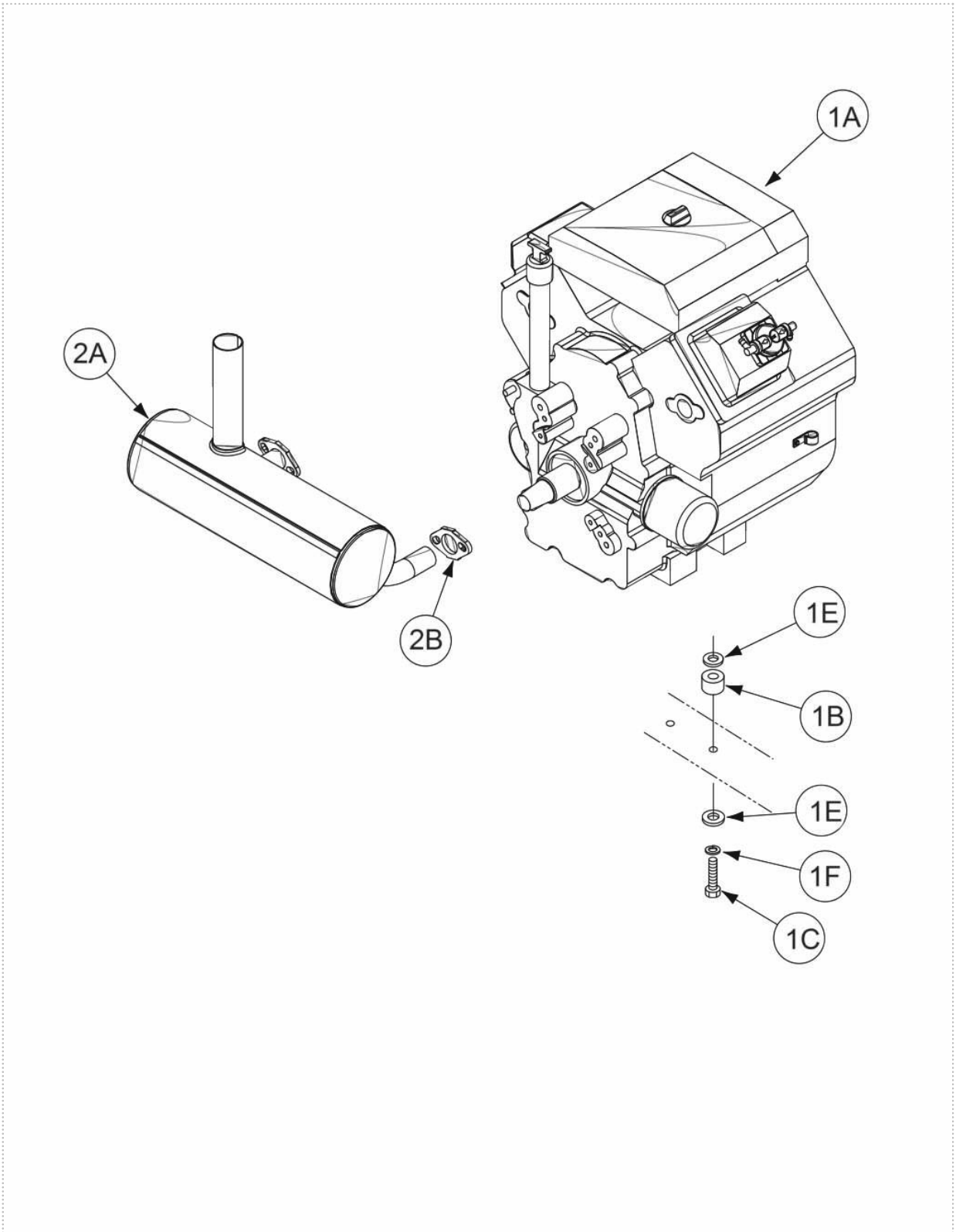

P-1110-F.jpg

Printed 01/11/2017 at 10:51:41. Produced by Enigma.

Blower Baffle Assembly

KEY	PART NUMBER	DESCRIPTION	QTY
	9SG4097-12	BLOWER BAFFLE ASBLY	1
1	9SG3862-1	BAFFLE	1
2	9ST13086-163	WARNING DECAL	2
3A	9SL11845-1	CHOPPER HEATSINK ASBLY	1
3B	9SS24624	BAFFLE	1
3C	9SS22168	HEAT SINK HOLDER	3
	9SS9225-17	THREAD FORMING SCREW (ROLLING)	3
	9SS9225-17	THREAD FORMING SCREW (ROLLING)	3
3F	9SS9262-98	PLAIN WASHER	3
3G	9SE106A-2	LOCKWASHER	3
3H	9SCF000017	1/4-20HN	3
4A	9SG5507-4	WELD CONTROL PC BD ASBLY	1
	9SS8025-100	SELF TAPPING SCREW	4
5A	9SS13490-114	CAPACITOR	1
5B	9SL9250	CAPACITOR BRKT	1
7	9ST14614-1	UNIVERSAL BUSHING	2
8A	9SS10404-132	RESISTORWW25W105%	1
	9SCF000009	#10-24X3.00RHS	1
8C	9ST4479-A	INSULATING WASHER	2
8D	9SS9262-27	PLAIN WASHER	1
8E	9SE106A-1	LOCKWASHER	1
8F	9SCF000010	#10-24HN	1
9A	9SS10404-138	RESISTOR-WW100W505%	1
9B	9SS22168	HEAT SINK HOLDER	2
	9SS9225-17	THREAD FORMING SCREW (ROLLING)	2
9D	9SS9262-98	PLAIN WASHER	2
9E	9SE106A-2	LOCKWASHER	2
9F	9SCF000017	1/4-20HN	2
	9SCF000191	#10-24X7.50RHS	1
9H	9SS9262-27	PLAIN WASHER	2
9J	9SE106A-1	LOCKWASHER	1
9K	9SCF000010	#10-24HN	1
13A	9ST13637-6	DIODE-BRIDGE35A400VF-W1-PH	1
	9SCF000072	#10-24X.75RHS	1

Printed 01/11/2017 at 10:51:41. Produced by Enigma.

Blower Baffle Assembly

KEY	PART NUMBER	DESCRIPTION	QTY
	9SS9262-27	PLAIN WASHER	1
	9SE106A-1	LOCKWASHER	1
	9SCF000010	#10-24HN	1
15	9SS9225-68	THREAD FORMING SCREW (CUTTING)	1
16	9SS18543-5	GROMMET	1

Printed 01/11/2017 at 10:51:41. Produced by Enigma.

Blower Baffle Assembly

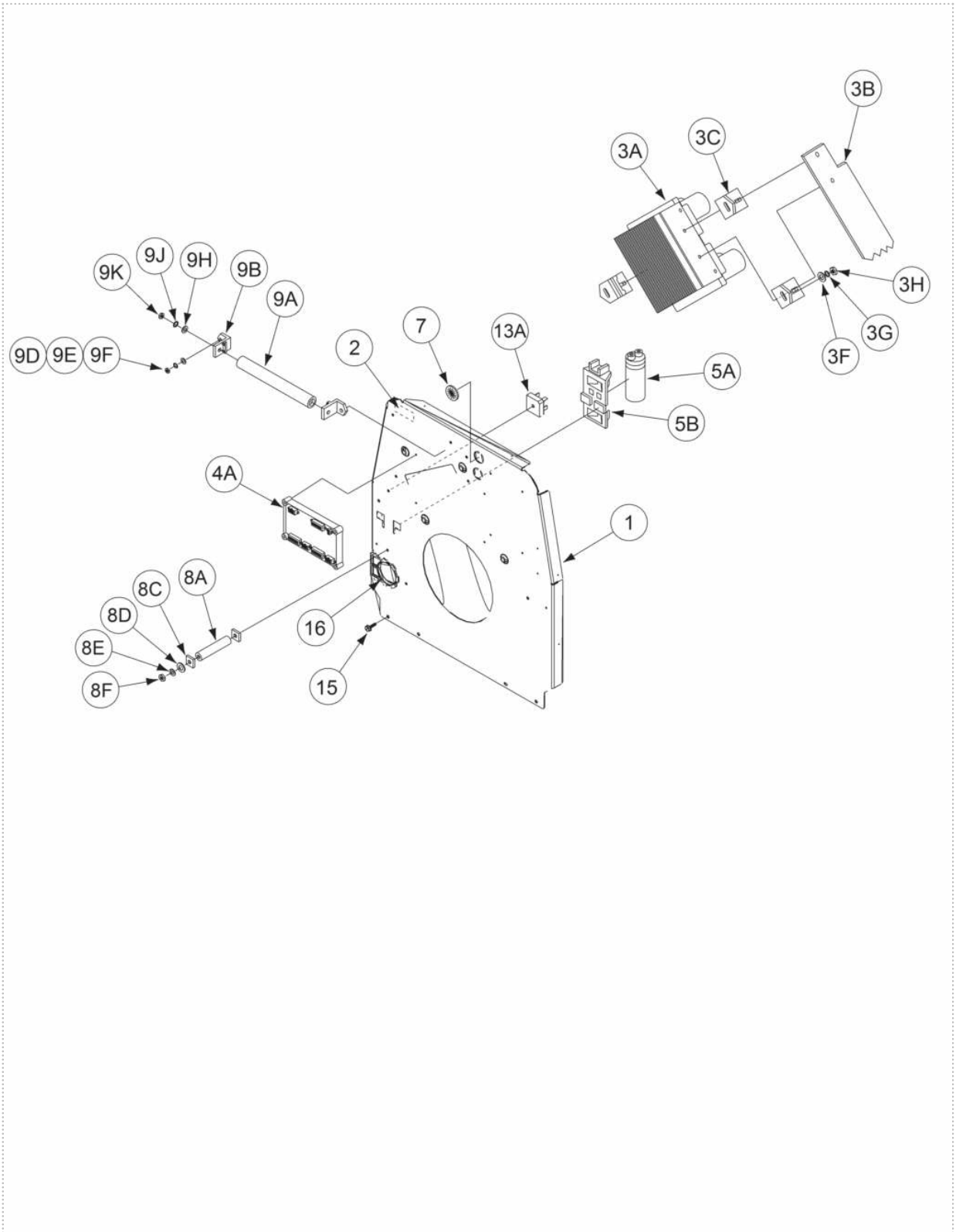

P-1110-G.jpg

Printed 01/11/2017 at 10:51:41. Produced by Enigma.

Stator/Rotor Assembly

KEY	PART NUMBER	DESCRIPTION	QTY
1A	9SL11086-2	ROTOR & SHAFT ASBLY	1
1B	9SS20110-3	CENTERING WASHER	1
1C	9ST14843-6	SPECIAL HEX HD BOLT	1
1D	9SS18044-9	TOLERANCE RING	1
1E	9SL9033	BLOWER	1
1F	9SS9262-149	PLAIN WASHER	1
1G	9SM9300-85	BEARING	1
4A	9SG3849-1	FIREWALL	1
4B	9ST12380-1	BUSHING	1
4C	9ST12380-6	BUSHING	1
5A	9SM16158	BRUSH & BRUSH HOLDER ASBLY	1
	9SG2114	BRUSH HOLDER CARTRIDGE	1
	9SS19480	BRUSH ASBLY	2
	9SS19475	BRUSH CLIP	2
	9ST11862-44	COMPRESSION SPRING	2
	9SS19474	BRUSH	2
	9SM16157	BRUSH ASBLY RETAINER	1
5B	9SM18336	BRUSH HOLDER	1
	9SS8025-91	SELF TAPPING SCREW	2
5D	9SCF000015	1/4-20X1.00HHCS	2
5E	9SE106A-2	LOCKWASHER	2
5F	9SCF000017	1/4-20HN	2
7A	9SG3541-7	STATOR LAMINATION ASBLY	1
	9ST8833-10	HEX HD CAP SCREW	4
	9SE106A-16	LOCKWASHER	4
	9SS9262-120	PLAIN WASHER	2
	9SE106A-16	LOCKWASHER	2
7F	9SCF000067	3/8-16HN	2
8A	9SS20752	SOLENOID ASBLY	1
8B	9SS8025-91	SELF TAPPING SCREW	3
9A	9SS20848	PULL WIRE	1
	9SS21177	BRACKET	1
	9SS21015	BUSHINGLINKAGE RETAINING	2
10	9ST6778	SPRING	1

Printed 01/11/2017 at 10:51:41. Produced by Enigma.

Stator/Rotor Assembly

KEY	PART NUMBER	DESCRIPTION	QTY
11	9SS21020	PLUNGER	1
12	9SS9262-98	PLAIN WASHER	1
13	9ST9187-1	1/4-20HJLN	1
	9ST10642-242	FLEX TUBE	1
	9ST14882-1	DOOR BUMPER	4

Printed 01/11/2017 at 10:51:41. Produced by Enigma.

Stator/Rotor Assembly

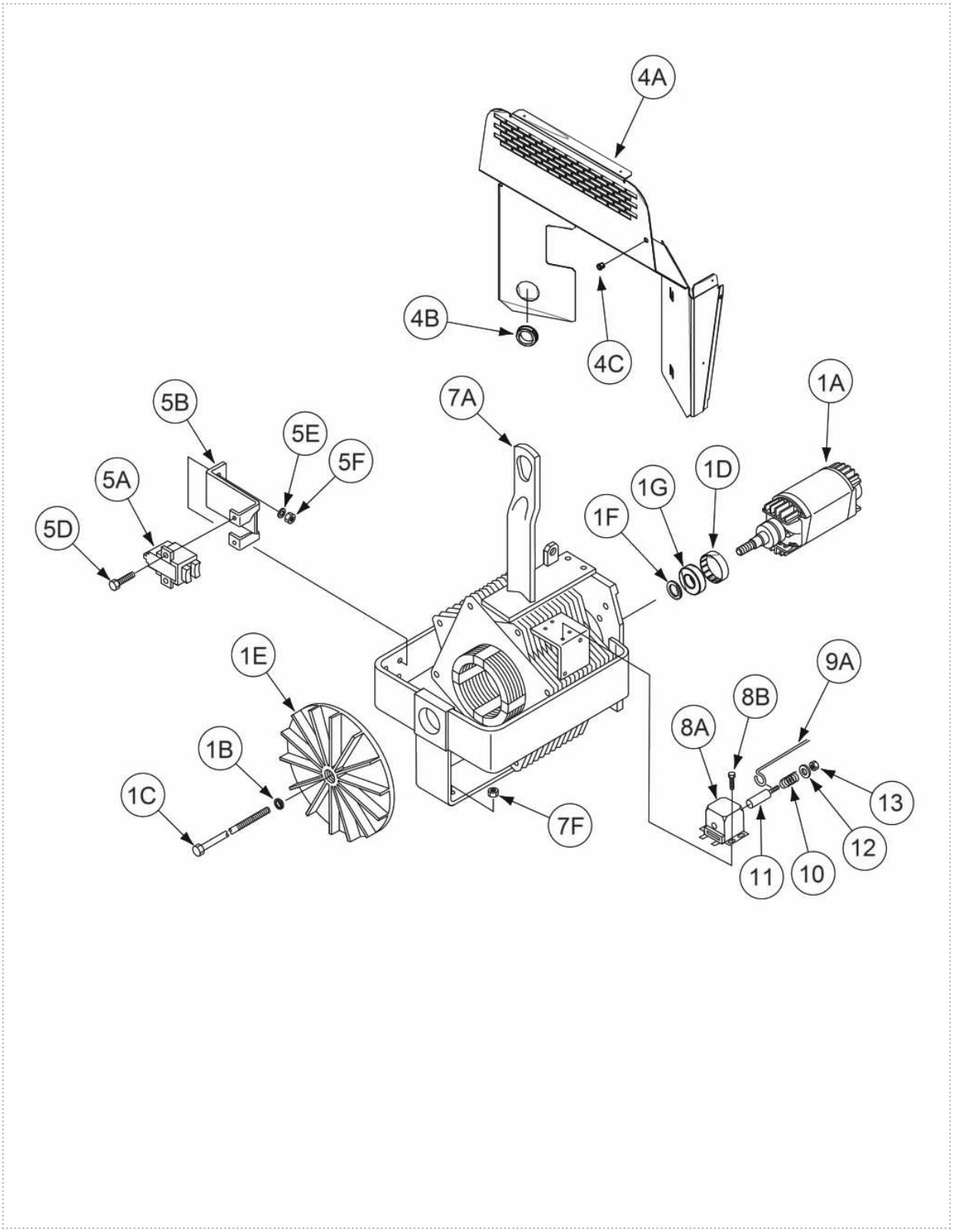

P-1110-H.jpg

Printed 01/11/2017 at 10:51:41. Produced by Enigma.

Covers & Case Back Assembly

KEY	PART NUMBER	DESCRIPTION	QTY
1A	9SG3510-3	CASE SIDE RIGHT	1
	9SS9225-68	THREAD FORMING SCREW (CUTTING)	3
2A	9SG3511-3	CASE SIDE-LEFT	1
	9SS9225-68	THREAD FORMING SCREW (CUTTING)	3
3A	9SG3865-4	CASE BACK	1
	9SS9225-68	THREAD FORMING SCREW (CUTTING)	4
	9ST14659-1	FASTENER BUTTON	2
4A	9SG3882-11	ROOF	1
4B	9SS9225-68	THREAD FORMING SCREW (CUTTING)	16
	9ST14882-1	DOOR BUMPER	6
5A	9SL11529-1	LEFT ENGINE DOOR	1
	9SS9225-66	SELF TAPPING SCREW	1
	9ST11525-5	SPEED NUT1/4-20	1
6A	9SL11528	RIGHT ENGINE DOOR	1
6B	9SS24694	LATCH	1
6C	9SS24348	HINGE	2
	9ST12584-12	BLIND RIVET	6
6E	9SS24665	OIL DRAIN DECAL	1
8	9SS12934-1	COVER SEAL	1
9A	9SG3514-5	ENGINE TOP COVER WELDED ASSEMBLY	1
9B	9SS24694	LATCH	1
	9ST14882	DOOR BUMPER	2
	9ST12584-6	RIVET	1
	9ST12584-9	RIVET	2
10	9SS17851	DECAL-CAUTION	1
11	9SM16197	DECAL-WARNING	1
12	9ST13086-109	DECAL-LPG WARNING	1
13	9SG6844	WIRING DIAGRAM	1
14	9SS30277-3	WARRANTY DECAL	1
15	9SS27368-5	DECAL - 14IN LINCOLN LOGO	2
16	9SS26886	ENGINE SERVICE DECAL	1
	9SS24665	OIL DRAIN DECAL	1
18	9SM21436	CARBON MONOXIDE WARNING DECAL	1
19	9SS24727-1	DECALCOUNTRY OF ORIGIN	1

Printed 01/11/2017 at 10:51:41. Produced by Enigma.

Covers & Case Back Assembly

KEY	PART NUMBER	DESCRIPTION	QTY
20	9SS25896	DECAL-WARNING	1
22A	9SM22185	BATTERY COVER	1
	9SS9225-68	THREAD FORMING SCREW (CUTTING)	3
23	9SM22367	FOAM AIR BOX	1
24	9SM21952-1	DECAL - RANGER FAMILY NAME	2

Printed 01/11/2017 at 10:51:41. Produced by Enigma.

Covers & Case Back Assembly

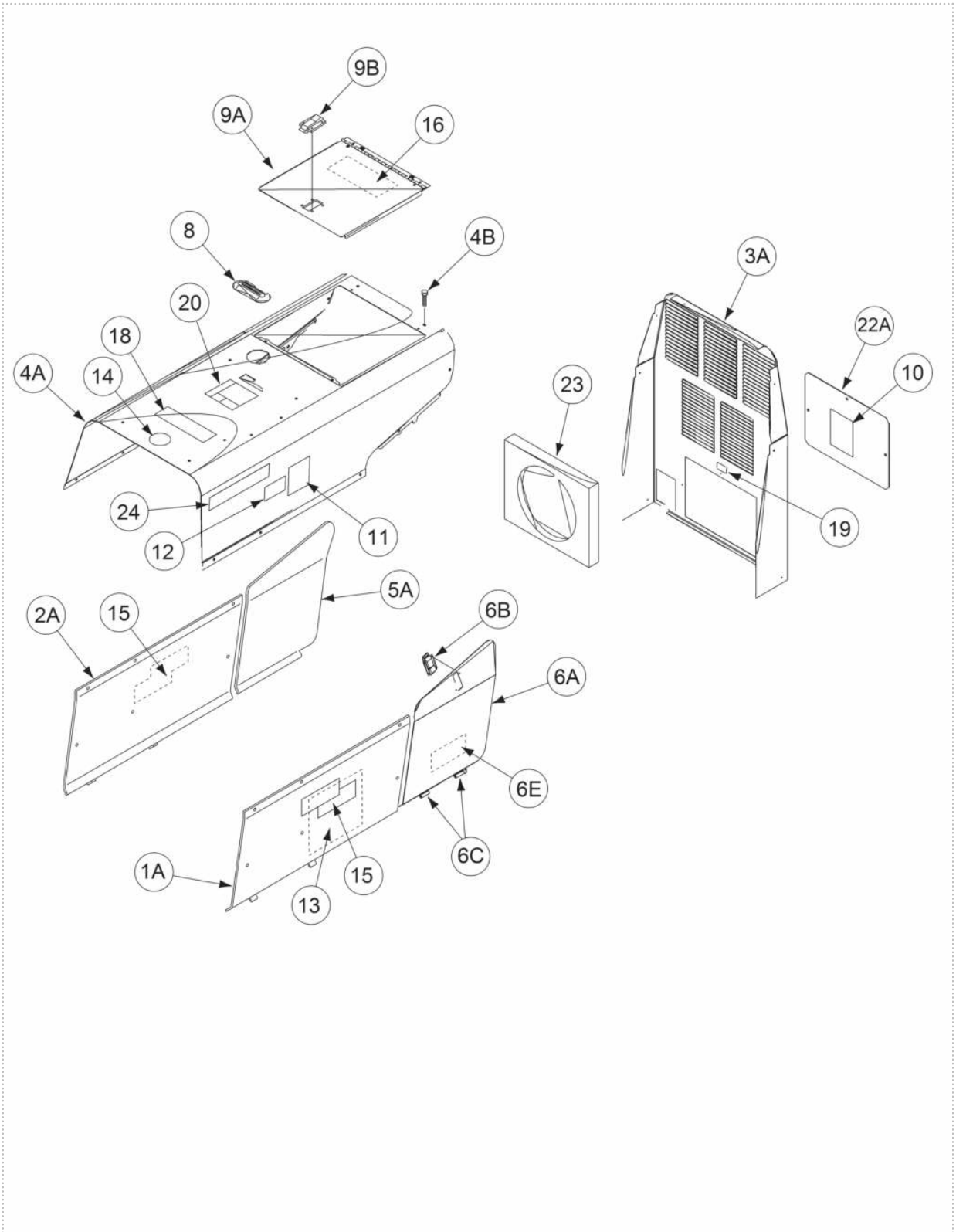

P-1110-J.jpg

Printed 01/11/2017 at 10:51:41. Produced by Enigma.

WARNING	● Do not touch electrically live parts or electrode with skin or wet clothing. ● Insulate yourself from work and ground.	● Keep flammable materials away.	● Wear eye, ear and body protection.
Spanish **AVISO DE PRECAUCION**	● No toque las partes o los electrodos bajo carga con la piel o ropa mojada. ● Aislese del trabajo y de la tierra.	● Mantenga el material combustible fuera del área de trabajo.	● Protéjase los ojos, los oídos y el cuerpo.
French **ATTENTION**	● Ne laissez ni la peau ni des vêtements mouillés entrer en contact avec des pièces sous tension. ● Isolez-vous du travail et de la terre.	● Gardez à l'écart de tout matériel inflammable.	● Protégez vos yeux, vos oreilles et votre corps.
German **WARNUNG**	● Berühren Sie keine stromführenden Teile oder Elektroden mit Ihrem Körper oder feuchter Kleidung! ● Isolieren Sie sich von den Elektroden und dem Erdboden!	● Entfernen Sie brennbarres Material!	● Tragen Sie Augen-, Ohren- und Körperschutz!
Portuguese **ATENÇÃO**	● Não toque partes elétricas e electrodos com a pele ou roupa molhada. ● Isole-se da peça e terra.	● Mantenha inflamáveis bem guardados.	● Use proteção para a vista, ouvido e corpo.
Japanese **注意事項**	● 通電中の電気部品、又は溶材にヒフやぬれた布で触れないこと。 ● 施工物やアースから身体が絶縁されている様にして下さい。	● 燃えやすいものの側での溶接作業は絶対にしてはなりません。	● 目、耳及び身体に保護具をして下さい。
Chinese **警 告**	● 皮肤或濕衣物切勿接觸帶電部件及銲條。 ● 使你自己與地面和工件絶緣。	● 把一切易燃物品移離工作場所。	● 佩戴眼、耳及身體勞動保護用具。
Korean **위 험**	● 전도체나 용접봉을 젖은 헝겁 또는 피부로 절대 접촉치 마십시요. ● 모재와 접지를 접촉치 마십시요.	● 인화성 물질을 접근 시키지 마시요.	● 눈, 귀와 몸에 보호장구를 착용하십시요.
Arabic **تحذير**	● لا تلمس الاجزاء التي يسري فيها التيار الكهربائي أو الالكترود بجلد الجسم أو بالملابس المبللة بالماء. ● ضع عازلا على جسمك خلال العمل.	● ضع المواد القابلة للاشتعال في مكان بعيد.	● ضع أدوات وملابس واقية على عينيك وأذنيك وجسمك.

READ AND UNDERSTAND THE MANUFACTURER'S INSTRUCTION FOR THIS EQUIPMENT AND THE CONSUMABLES TO BE USED AND FOLLOW YOUR EMPLOYER'S SAFETY PRACTICES.

SE RECOMIENDA LEER Y ENTENDER LAS INSTRUCCIONES DEL FABRICANTE PARA EL USO DE ESTE EQUIPO Y LOS CONSUMIBLES QUE VA A UTILIZAR, SIGA LAS MEDIDAS DE SEGURIDAD DE SU SUPERVISOR.

LISEZ ET COMPRENEZ LES INSTRUCTIONS DU FABRICANT EN CE QUI REGARDE CET EQUIPMENT ET LES PRODUITS A ETRE EMPLOYES ET SUIVEZ LES PROCEDURES DE SECURITE DE VOTRE EMPLOYEUR.

LESEN SIE UND BEFOLGEN SIE DIE BETRIEBSANLEITUNG DER ANLAGE UND DEN ELEKTRODENEINSATZ DES HERSTELLERS. DIE UNFALLVERHÜTUNGSVORSCHRIFTEN DES ARBEITGEBERS SIND EBENFALLS ZU BEACHTEN.

● Keep your head out of fumes. ● Use ventilation or exhaust to remove fumes from breathing zone.	● Turn power off before servicing.	● Do not operate with panel open or guards off.	**WARNING**
● Los humos fuera de la zona de respiración. ● Mantenga la cabeza fuera de los humos. Utilice ventilación o aspiración para gases.	● Desconectar el cable de alimentación de poder de la máquina antes de iniciar cualquier servicio.	● No operar con panel abierto o guardas quitadas.	Spanish **AVISO DE PRECAUCION**
● Gardez la tête à l'écart des fumées. ● Utilisez un ventilateur ou un aspirateur pour ôter les fumées des zones de travail.	● Débranchez le courant avant l'entretien.	● N'opérez pas avec les panneaux ouverts ou avec les dispositifs de protection enlevés.	French **ATTENTION**
● Vermeiden Sie das Einatmen von Schweibrauch! ● Sorgen Sie für gute Be- und Entlüftung des Arbeitsplatzes!	● Strom vor Wartungsarbeiten abschalten! (Netzstrom völlig öffnen; Maschine anhalten!)	● Anlage nie ohne Schutzgehäuse oder Innenschutzverkleidung in Betrieb setzen!	German **WARNUNG**
● Mantenha seu rosto da fumaça. ● Use ventilação e exhaustão para remover fumo da zona respiratória.	● Não opere com as tampas removidas. ● Desligue a corrente antes de fazer serviço. ● Não toque as partes elétricas nuas.	● Mantenha-se afastado das partes moventes. ● Não opere com os paineis abertos ou guardas removidas.	Portuguese **ATENÇÃO**
● ヒュームから頭を離すようにして下さい。 ● 換気や排煙に十分留意して下さい。	● メンテナンス・サービスに取りかかる際には、まず電源スイッチを必ず切って下さい。	● パネルやカバーを取り外したままで機械操作をしないで下さい。	Japanese **注意事項**
● 頭部遠離煙霧。 ● 在呼吸區使用通風或排風器除煙。	● 維修前切斷電源。	● 儀表板打開或沒有安全罩時不準作業。	Chinese **警 告**
● 얼굴로부터 용접가스를 멀리하십시요. ● 호흡지역으로부터 용접가스를 제거하기 위해 가스제거기나 통풍기를 사용하십시요.	● 보수전에 전원을 차단하십시요.	● 판넬이 열린 상태로 작동치 마십시요.	Korean **위 험**
● ابعد رأسك بعيداً عن الدخان. ● استعمل التهوية أو جهاز ضغط الدخان للخارج لكي تبعد الدخان عن المنطقة التي تتنفس فيها.	● اقطع التيار الكهربائي قبل القيام بأية صيانة.	● لا تشغل هذا الجهاز اذا كانت الاغطية الحديدية الواقية ليست عليه.	Arabic **تحذير**

LEIA E COMPREENDA AS INSTRUÇÕES DO FABRICANTE PARA ESTE EQUIPAMENTO E AS PARTES DE USO, E SIGA AS PRÁTICAS DE SEGURANÇA DO EMPREGADOR.

使う機械や溶材のメーカーの指示書をよく読み、まず理解して下さい。そして貴社の安全規定に従って下さい。

請詳細閱讀並理解製造廠提供的説明以及應該使用的銀捍材料，並請遵守貴方的有関勞動保護規定。

이 제품에 동봉된 작업지침서를 숙지하시고 귀사의 작업자 안전수칙을 준수하시기 바랍니다.

اقرأ بتمعن وافهم تعليمات المصنع المنتج لهذه المعدات والمواد قبل استعمالها واتبع تعليمات الوقاية لصاحب العمل.

CUSTOMER ASSISTANCE POLICY

The business of The Lincoln Electric Company is manufacturing and selling high quality welding equipment, consumables, and cutting equipment. Our challenge is to meet the needs of our customers and to exceed their expectations. On occasion, purchasers may ask Lincoln Electric for advice or information about their use of our products. We respond to our customers based on the best information in our possession at that time. Lincoln Electric is not in a position to warrant or guarantee such advice, and assumes no liability, with respect to such information or advice. We expressly disclaim any warranty of any kind, including any warranty of fitness for any customer's particular purpose, with respect to such information or advice. As a matter of practical consideration, we also cannot assume any responsibility for updating or correcting any such information or advice once it has been given, nor does the provision of information or advice create, expand or alter any warranty with respect to the sale of our products.

Lincoln Electric is a responsive manufacturer, but the selection and use of specific products sold by Lincoln Electric is solely within the control of, and remains the sole responsibility of the customer. Many variables beyond the control of Lincoln Electric affect the results obtained in applying these types of fabrication methods and service requirements.

Subject to Change – This information is accurate to the best of our knowledge at the time of printing. Please refer to www.lincolnelectric.com for any updated information.

THE LINCOLN ELECTRIC COMPANY
22801 St. Clair Avenue • Cleveland, OH • 44117-1199 • U.S.A.
Phone: +1.216.481.8100 • www.lincolnelectric.com