Operator's Manual

Air Vantage® 600X PLUS

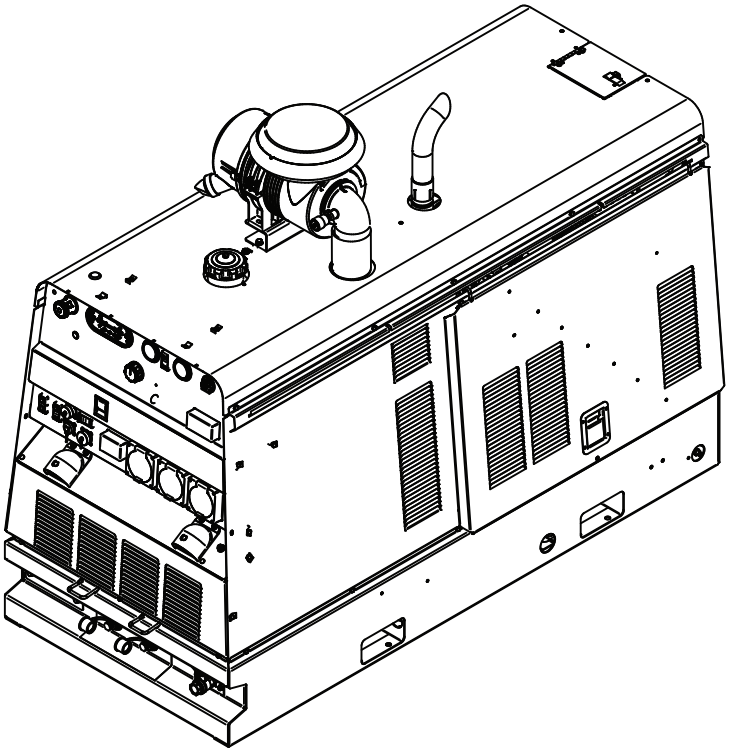

For use with machines having Code Numbers:
13156

GENUINE LINCOLN PARTS™

Register your machine:
www.lincolnelectric.com/register

Authorized Service and Distributor Locator:
www.lincolnelectric.com/locator

Save for future reference

Date Purchased

Code: (ex: 10859)

Serial: (ex: U1060512345)

Need Help? Call 1.888.935.3877
to talk to a Service Representative

Hours of Operation:
8:00 AM to 6:00 PM (ET) Mon. thru Fri.

After hours?
Use "Ask the Experts" at lincolnelectric.com
A Lincoln Service Representative will contact you no later than the following business day.

For Service outside the USA:
Email: globalservice@lincolnelectric.com

IM10614-B | Issue Date Apr - 23

© Lincoln Global, Inc. All Rights Reserved.

THE LINCOLN ELECTRIC COMPANY
22801 St. Clair Avenue • Cleveland, OH • 44117-1199 • U.S.A.
Phone: +1.216.481.8100 • www.lincolnelectric.com

THANK YOU FOR SELECTING A QUALITY PRODUCT BY LINCOLN ELECTRIC.

PLEASE EXAMINE CARTON AND EQUIPMENT FOR DAMAGE IMMEDIATELY

When this equipment is shipped, title passes to the purchaser upon receipt by the carrier. Consequently, claims for material damaged in shipment must be made by the purchaser against the transportation company at the time the shipment is received.

SAFETY DEPENDS ON YOU

Lincoln arc welding and cutting equipment is designed and built with safety in mind. However, your overall safety can be increased by proper installation ... and thoughtful operation on your part. **DO NOT INSTALL, OPERATE OR REPAIR THIS EQUIPMENT WITHOUT READING THIS MANUAL AND THE SAFETY PRECAUTIONS CONTAINED THROUGHOUT.** And, most importantly, think before you act and be careful.

⚠ WARNING

This statement appears where the information must be followed exactly to avoid serious personal injury or loss of life.

⚠ CAUTION

This statement appears where the information must be followed to avoid minor personal injury or damage to this equipment.

KEEP YOUR HEAD OUT OF THE FUMES.

DON'T get too close to the arc. Use corrective lenses if necessary to stay a reasonable distance away from the arc.

READ and obey the Safety Data Sheet (SDS) and the warning label that appears on all containers of welding materials.

USE ENOUGH VENTILATION or exhaust at the arc, or both, to keep the fumes and gases from your breathing zone and the general area.

IN A LARGE ROOM OR OUTDOORS, natural ventilation may be adequate if you keep your head out of the fumes (See below).

USE NATURAL DRAFTS or fans to keep the fumes away from your face.

If you develop unusual symptoms, see your supervisor. Perhaps the welding atmosphere and ventilation system should be checked.

WEAR CORRECT EYE, EAR & BODY PROTECTION

PROTECT your eyes and face with welding helmet properly fitted and with proper grade of filter plate (See ANSI Z49.1).

PROTECT your body from welding spatter and arc flash with protective clothing including woolen clothing, flame-proof apron and gloves, leather leggings, and high boots.

PROTECT others from splatter, flash, and glare with protective screens or barriers.

IN SOME AREAS, protection from noise may be appropriate.

BE SURE protective equipment is in good condition.

Also, wear safety glasses in work area **AT ALL TIMES.**

SPECIAL SITUATIONS

DO NOT WELD OR CUT containers or materials which previously had been in contact with hazardous substances unless they are properly cleaned. This is extremely dangerous.

DO NOT WELD OR CUT painted or plated parts unless special precautions with ventilation have been taken. They can release highly toxic fumes or gases.

Additional precautionary measures

PROTECT compressed gas cylinders from excessive heat, mechanical shocks, and arcs; fasten cylinders so they cannot fall.

BE SURE cylinders are never grounded or part of an electrical circuit.

REMOVE all potential fire hazards from welding area.

ALWAYS HAVE FIRE FIGHTING EQUIPMENT READY FOR IMMEDIATE USE AND KNOW HOW TO USE IT.

SECTION A: WARNINGS

CALIFORNIA PROPOSITION 65 WARNINGS

WARNING: Breathing diesel engine exhaust exposes you to chemicals known to the State of California to cause cancer and birth defects, or other reproductive harm.

- Always start and operate the engine in a well-ventilated area.
- If in an exposed area, vent the exhaust to the outside.
- Do not modify or tamper with the exhaust system.
- Do not idle the engine except as necessary.

For more information go to www.P65 warnings.ca.gov/diesel

WARNING: This product, when used for welding or cutting, produces fumes or gases which contain chemicals known to the State of California to cause birth defects and, in some cases, cancer. (California Health & Safety Code § 25249.5 *et seq.)*

WARNING: Cancer and Reproductive Harm www.P65warnings.ca.gov

ARC WELDING CAN BE HAZARDOUS. PROTECT YOURSELF AND OTHERS FROM POSSIBLE SERIOUS INJURY OR DEATH. KEEP CHILDREN AWAY. PACEMAKER WEARERS SHOULD CONSULT WITH THEIR DOCTOR BEFORE OPERATING.

Read and understand the following safety highlights. For additional safety information, it is strongly recommended that you purchase a copy of "Safety in Welding & Cutting - ANSI Standard Z49.1" from the American Welding Society, P.O. Box 351040, Miami, Florida 33135 or CSA Standard W117.2. A Free copy of "Arc Welding Safety" booklet E205 is available from the Lincoln Electric Company, 22801 St. Clair Avenue, Cleveland, Ohio 44117-1199.

BE SURE THAT ALL INSTALLATION, OPERATION, MAINTENANCE AND REPAIR PROCEDURES ARE PERFORMED ONLY BY QUALIFIED INDIVIDUALS.

FOR ENGINE POWERED EQUIPMENT.

1.a. Turn the engine off before troubleshooting and maintenance work unless the maintenance work requires it to be running.

1.b. Operate engines in open, well-ventilated areas or vent the engine exhaust fumes outdoors.

1.c. Do not add the fuel near an open flame welding arc or when the engine is running. Stop the engine and allow it to cool before refueling to prevent spilled fuel from vaporizing on contact with hot engine parts and igniting. Do not spill fuel when filling tank. If fuel is spilled, wipe it up and do not start engine until fumes have been eliminated.

1.d. Keep all equipment safety guards, covers and devices in position and in good repair. Keep hands, hair, clothing and tools away from V-belts, gears, fans and all other moving parts when starting, operating or repairing equipment.

1.e. In some cases it may be necessary to remove safety guards to perform required maintenance. Remove guards only when necessary and replace them when the maintenance requiring their removal is complete. Always use the greatest care when working near moving parts.

1.f. Do not put your hands near the engine fan. Do not attempt to override the governor or idler by pushing on the throttle control rods while the engine is running.

1.g. To prevent accidentally starting gasoline engines while turning the engine or welding generator during maintenance work, disconnect the spark plug wires, distributor cap or magneto wire as appropriate.

1.h. To avoid scalding, do not remove the radiator pressure cap when the engine is hot.

1.i. Using a generator indoors CAN KILL YOU IN MINUTES.

1.j. Generator exhaust contains carbon monoxide. This is a poison you cannot see or smell.

1.k. NEVER use inside a home or garage, EVEN IF doors and windows are open.

1.l. Only use OUTSIDE and far away from windows, doors and vents.

1.m. Avoid other generator hazards. READ MANUAL BEFORE USE.

ELECTRIC AND MAGNETIC FIELDS MAY BE DANGEROUS

2.a. Electric current flowing through any conductor causes localized Electric and Magnetic Fields (EMF). Welding current creates EMF fields around welding cables and welding machines

2.b. EMF fields may interfere with some pacemakers, and welders having a pacemaker should consult their physician before welding.

2.c. Exposure to EMF fields in welding may have other health effects which are now not known.

2.d. All welders should use the following procedures in order to minimize exposure to EMF fields from the welding circuit:

2.d.1. Route the electrode and work cables together - Secure them with tape when possible.

2.d.2. Never coil the electrode lead around your body.

2.d.3. Do not place your body between the electrode and work cables. If the electrode cable is on your right side, the work cable should also be on your right side.

2.d.4. Connect the work cable to the workpiece as close as possible to the area being welded.

2.d.5. Do not work next to welding power source.

ELECTRIC SHOCK CAN KILL.

3.a. The electrode and work (or ground) circuits are electrically “hot” when the welder is on. Do not touch these “hot” parts with your bare skin or wet clothing. Wear dry, hole-free gloves to insulate hands.

3.b. Insulate yourself from work and ground using dry insulation. Make certain the insulation is large enough to cover your full area of physical contact with work and ground.

In addition to the normal safety precautions, if welding must be performed under electrically hazardous conditions (in damp locations or while wearing wet clothing; on metal structures such as floors, gratings or scaffolds; when in cramped positions such as sitting, kneeling or lying, if there is a high risk of unavoidable or accidental contact with the workpiece or ground) use the following equipment:

- Semiautomatic DC Constant Voltage (Wire) Welder.
- DC Manual (Stick) Welder.
- AC Welder with Reduced Voltage Control.

3.c. In semiautomatic or automatic wire welding, the electrode, electrode reel, welding head, nozzle or semiautomatic welding gun are also electrically “hot”.

3.d. Always be sure the work cable makes a good electrical connection with the metal being welded. The connection should be as close as possible to the area being welded.

3.e. Ground the work or metal to be welded to a good electrical (earth) ground.

3.f. Maintain the electrode holder, work clamp, welding cable and welding machine in good, safe operating condition. Replace damaged insulation.

3.g. Never dip the electrode in water for cooling.

3.h. Never simultaneously touch electrically “hot” parts of electrode holders connected to two welders because voltage between the two can be the total of the open circuit voltage of both welders.

3.i. When working above floor level, use a safety belt to protect yourself from a fall should you get a shock.

3.j. Also see Items 6.c. and 8.

ARC RAYS CAN BURN.

4.a. Use a shield with the proper filter and cover plates to protect your eyes from sparks and the rays of the arc when welding or observing open arc welding. Headshield and filter lens should conform to ANSI Z87. I standards.

4.b. Use suitable clothing made from durable flame-resistant material to protect your skin and that of your helpers from the arc rays.

4.c. Protect other nearby personnel with suitable, non-flammable screening and/or warn them not to watch the arc nor expose themselves to the arc rays or to hot spatter or metal.

FUMES AND GASES CAN BE DANGEROUS.

5.a. Welding may produce fumes and gases hazardous to health. Avoid breathing these fumes and gases. When welding, keep your head out of the fume. Use enough ventilation and/or exhaust at the arc to keep fumes and gases away from the breathing zone. **When welding hardfacing (see instructions on container or SDS) or on lead or cadmium plated steel and other metals or coatings which produce highly toxic fumes, keep exposure as low as possible and within applicable OSHA PEL and ACGIH TLV limits using local exhaust or mechanical ventilation unless exposure assessments indicate otherwise. In confined spaces or in some circumstances, outdoors, a respirator may also be required. Additional precautions are also required when welding on galvanized steel.**

5. b. The operation of welding fume control equipment is affected by various factors including proper use and positioning of the equipment, maintenance of the equipment and the specific welding procedure and application involved. Worker exposure level should be checked upon installation and periodically thereafter to be certain it is within applicable OSHA PEL and ACGIH TLV limits.

5.c. Do not weld in locations near chlorinated hydrocarbon vapors coming from degreasing, cleaning or spraying operations. The heat and rays of the arc can react with solvent vapors to form phosgene, a highly toxic gas, and other irritating products.

5.d. Shielding gases used for arc welding can displace air and cause injury or death. Always use enough ventilation, especially in confined areas, to insure breathing air is safe.

5.e. Read and understand the manufacturer’s instructions for this equipment and the consumables to be used, including the Safety Data Sheet (SDS) and follow your employer’s safety practices. SDS forms are available from your welding distributor or from the manufacturer.

5.f. Also see item 1.b.

WELDING AND CUTTING SPARKS CAN CAUSE FIRE OR EXPLOSION.

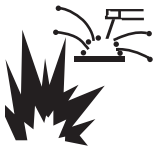

6.a. Remove fire hazards from the welding area. If this is not possible, cover them to prevent the welding sparks from starting a fire. Remember that welding sparks and hot materials from welding can easily go through small cracks and openings to adjacent areas. Avoid welding near hydraulic lines. Have a fire extinguisher readily available.

6.b. Where compressed gases are to be used at the job site, special precautions should be used to prevent hazardous situations. Refer to “Safety in Welding and Cutting” (ANSI Standard Z49.1) and the operating information for the equipment being used.

6.c. When not welding, make certain no part of the electrode circuit is touching the work or ground. Accidental contact can cause overheating and create a fire hazard.

6.d. Do not heat, cut or weld tanks, drums or containers until the proper steps have been taken to insure that such procedures will not cause flammable or toxic vapors from substances inside. They can cause an explosion even though they have been “cleaned”. For information, purchase “Recommended Safe Practices for the Preparation for Welding and Cutting of Containers and Piping That Have Held Hazardous Substances”, AWS F4.1 from the American Welding Society (see address above).

6.e. Vent hollow castings or containers before heating, cutting or welding. They may explode.

6.f. Sparks and spatter are thrown from the welding arc. Wear oil free protective garments such as leather gloves, heavy shirt, cuffless trousers, high shoes and a cap over your hair. Wear ear plugs when welding out of position or in confined places. Always wear safety glasses with side shields when in a welding area.

6.g. Connect the work cable to the work as close to the welding area as practical. Work cables connected to the building framework or other locations away from the welding area increase the possibility of the welding current passing through lifting chains, crane cables or other alternate circuits. This can create fire hazards or overheat lifting chains or cables until they fail.

6.h. Also see item 1.c.

6.I. Read and follow NFPA 51B “Standard for Fire Prevention During Welding, Cutting and Other Hot Work”, available from NFPA, 1 Batterymarch Park, PO box 9101, Quincy, MA 022690-9101.

6.j. Do not use a welding power source for pipe thawing.

CYLINDER MAY EXPLODE IF DAMAGED.

7.a. Use only compressed gas cylinders containing the correct shielding gas for the process used and properly operating regulators designed for the gas and pressure used. All hoses, fittings, etc. should be suitable for the application and maintained in good condition.

7.b. Always keep cylinders in an upright position securely chained to an undercarriage or fixed support.

7.c. Cylinders should be located:

- Away from areas where they may be struck or subjected to physical damage.
- A safe distance from arc welding or cutting operations and any other source of heat, sparks, or flame.

7.d. Never allow the electrode, electrode holder or any other electrically “hot” parts to touch a cylinder.

7.e. Keep your head and face away from the cylinder valve outlet when opening the cylinder valve.

7.f. Valve protection caps should always be in place and hand tight except when the cylinder is in use or connected for use.

7.g. Read and follow the instructions on compressed gas cylinders, associated equipment, and CGA publication P-I, “Precautions for Safe Handling of Compressed Gases in Cylinders,” available from the Compressed Gas Association, 14501 George Carter Way Chantilly, VA 20151.

FOR ELECTRICALLY POWERED EQUIPMENT.

8.a. Turn off input power using the disconnect switch at the fuse box before working on the equipment.

8.b. Install equipment in accordance with the U.S. National Electrical Code, all local codes and the manufacturer’s recommendations.

8.c. Ground the equipment in accordance with the U.S. National Electrical Code and the manufacturer’s recommendations.

Refer to http://www.lincolnelectric.com/safety for additional safety information.

INSTALLATION ..... SECTION A
GENERAL DESCRIPTION A-1
TECHNICAL SPECIFICATIONS A-1
VRD (VOLTAGE REDUCTION DEVICE) A-2
LOCATION AND VENTILATION A-2
STORING A-3
STACKING A-3
ANGLE OF OPERATION A-3
LIFTING A-3
ENVIRONMENTAL LIMITATIONS A-3
HIGH ALTITUDE OPERATION A-3
HIGH TEMPERATURE OPERATION A-3
COLD WEATHER STARTING: A-3
TOWING A-4
SERVICE TRUCK AND TRAILER INSTALLATION A-4
PRE-OPERATION ENGINE AND COMPRESSOR SERVICE A-4
ENGINE OIL A-4
FUEL A-4
ENGINE COOLING SYSTEM A-4
BATTERY CONNECTION A-5
EXHAUST OUTLET PIPE A-5
SPARK ARRESTOR A-5
AIR CLEANER INSTALL A-5
COMPRESSOR SYSTEM A-6
MACHINE GROUNDING A-6
AUXILIARY POWER RECEPTACLES A-6
240 VAC RECEPTACLES AND RCD A-6
CIRCUIT BREAKERS A-6
WELDING OUTPUT CABLES A-7
PULSE WELDING A-7
CABLE INSTALLATION A-7
CABLE INDUCTANCE AND ITS EFFECTS ON WELDING A-8
CONTROL CABLE CONNECTIONS A-8
CROSSLINC TECHNOLOGY A-8
REMOTE CONTROL CONNECTIONS A-9
WELDING TERMINALS A-9
ACCESSORY CONNECTION DIAGRAMS A-10
CROSSLINC SETUP CV A-11
CROSSLINC SETUP CC A-11
DUAL ARC SETUP A-12
TIG MODULE A-13
SPOOL GUN MODULE A-13

OPERATION ..... SECTION B
ADDITIONAL SAFETY PRECAUTIONS B-1
RECOMMENDED APPLICATIONS B-1
ADD FUEL B-2
BREAK-IN PERIOD B-2
ENGINE OPERATION B-2
STARTING THE ENGINE B-2
STOPPING THE ENGINE B-2
CONTROLS AND SETTINGS B-3
SYSTEM CONTROLS B-3
ACTIVATING THE COMPRESSOR SYSTEM B-8
DEACTIVATING THE COMPRESSOR SYSTEM B-8
CONTROL AND INDICATOR FUNCTIONALITY B-9
CONTROL SAFEGUARDS TO IMPROVE RELIABILITY B-9
HIDDEN SETUP MENU FUNCTIONS B-10
RESET BACK TO DEFAULT SETTINGS B-11
MAKING A WELD B-12
DUTY CYCLE B-12

DEFINITION OF WELDING MODES....B-12
BASIC WELDING CONTROLS....B-12
WELDER OPERATION....B-13
SETTINGS WHEN USING THE K930-2 TIG MODULE....B-14
CV-WIRE MODE....B-15
ARC GOUGING MODE....B-15
ARCLINK MODE....B-15
PULSE WELDING....B-16
CROSSLINC....B-17
PARALLELING....B-17
AUXILIARY POWER OPERATION....B-18
SIMULTANEOUS WELDING AND AUXILIARY POWER LOADS....B-18
TYPICAL FUEL CONSUMPTION....B-19

ACCESSORIES ....SECTION C
CROSSLINC ACCESSORIES C-1
GENERAL ACCESSORIES....C-1
TIG ACCESSORIES C-1
WIRE FEEDERS & GUNS....C-2
CABLE ACCESSORIES C-2
POWER SOURCES....C-2

MAINTENANCE ....SECTION D
ROUTINE AND PERIODIC MAINTENANCE D-1
ENGINE MAINTENANCE....D-2
AIR FILTER D-2
FUEL FILTERS....D-4
COOLING SYSTEM D-4
CHECKING AND REPLACING COOLANT....D-4
BATTERY HANDLING....D-5
ENGINE OIL CHANGE D-5
TIGHTENING THE FAN BELT D-6
NAMEPLATES / WARNING DECALS MAINTENANCE D-6
STORAGE D-6

TROUBLESHOOTING....SECTION E

WIRING, CONNECTION DIAGRAMS AND DIMENSION PRINT ....SECTION F

PARTS LIST ....PARTS.LINCOLNELECTRIC.COM
CONTENT/DETAILS MAY BE CHANGED OR UPDATED WITHOUT NOTICE. FOR MOST CURRENT INSTRUCTION MANUALS, GO TO PARTS.LINCOLNELECTRIC.COM.

GRAPHIC SYMBOLS

The following graphics appear on the machine or in the manual.

	Warning or Caution		Engine		Downhill Pipe welding
	Instructions		Oil		Remote
	Fumes and Gases	PSI	Oil Pressure		Arc Control
	Explosion		Engine Temperature		Pulse
	Arc Rays		Engine Hours	+ V −	Voltmeter Polarity
	Moving Parts		Fuel		
	Falling Equipment	− +	Battery		Stop
	Electric Shock		Welder Output		Auto Idle
	Fire or explosion	V	Voltage Output		High Idle
	Battery explosion	A	Amperage Output		Start
	Battery acid	A	Welding Amperage		Glow Plug
U_r	Reduced Open Circuit Voltage	V	Welding Voltage		Protective Ground
U0	Open Circuit Voltage		CrossLinc		Circuit Breaker
I2	Output Current		Status Indicator		Wire Feeder
U2	Output Voltage	m	Mode Select		Receptacle
X	Duty Cycle		SMAW welding	+	Positive Output
	Phase		GMAW/FCAW welding	−	Negative Output
	3 phase alternator		GTAW welding		
	Direct current		Carbon Arc Gouging		

GENERAL DESCRIPTION

The Air Vantage® 600X PLUS is a diesel engine-driven welding power source. The machine uses a brush type alternating current generator for DC multi-purpose welding, and for 415 VAC three phase, 240 VAC single phase auxiliary standby power. The welding control system uses state of the art Chopper Technology®. The machine also integrates a belt-driven 60 CFM rotary screw compressor.

The machine has been equipped with CrossLinc® Technology to provide weld cable communication for voltage control at the arc without the need for a control cable.

TECHNICAL SPECIFICATIONS

INPUT - DIESEL ENGINE	
Make /Model	Description
(K4794-2) Deutz® TD2.9L4 EPA Tier 3	4 Cylinder 65.7 HP (49 kW) Turbocharged Water Cooled Diesel Engine
Speed (RPM)	Displacement
60Hz High Idle 1800 Low Idle 1525 Full Load	178 cu. in. (2.9L) Bore x Stroke 3.62” x 4.33” 92mm x 110mm
50Hz Idle 1525 Full Load	
Starting System	Capacities
12 VDC Battery and Starter with Automatic Glow Plugs	Fuel: 25 US gal. (94.6L) Oil: 2.25 US gal. (8.5L) Cooling System: 2.5 US gal. (9.5L)
Battery Size	
BCI Group Size 34 800 Cold Crank Amps	

OUTPUT @ 104°F(40°C) - WELDER AND GENERATOR	
Welding Mode (60Hz)	Output Range
CC-Stick	30-600 Amps
Downhill Pipe (CC)	40-350 Amps
Touch Start TIG	20-350 Amps
CV-Wire	10-45 Volts
Arc Gouging	60-600 Amps
Open Circuit Voltage 60V Avg @ 1800 RPM 64V Peak @ 1800 RPM	
Auxiliary Power(1) 415 VAC - 23,000 Watts. 50Hz., Three Phase 240 VAC - 7,200 Watts, 50Hz., Single Phase	

RECEPTACLES	
Receptacle	Circuit Breaker
1 - 415 VAC 50Hz Three Phase (AU 56S0532)	32 Amps
2 - 240 VAC 50Hz Single Phase (Australian 56S0315A) RCD Protected	15 Amps

PHYSICAL DIMENSIONS	
Height (2)	42.0 in. (1066.8 mm)
Width (3)	32.9 in. (835.7 mm)
Depth	69.0 in. (1753 mm)
Weight (4)	1737 lbs. (787 kg)

(1) Output rating in watts is equivalent to volt-amperes at unity power factor. Output voltage is within +/- 10% at all loads up to rated capacity. When welding, available auxiliary power will be reduced.
(2) Top of Enclosure. Add 16.1" (409 mm) for exhaust and air cleaner.
(3) Includes Door. Base is 31.6” (803 mm) wide.
(4) Approximate weight less fuel.

RATED OUTPUT @ 104°F(40°C) - WELDER 60Hz		
Duty Cycle	Welding Output	Volts at Rated Amps
100%	525 Amps (DC multi-purpose)	41 Volts
60%	575 Amps (DC multi-purpose)	43 Volts

RATED OUTPUT @ 104°F(40°C) - WELDER 50Hz		
Duty Cycle	Welding Output	Volts at Rated Amps
100%	425 Amps (DC multi-purpose)	43 Volts
60%	475 Amps (DC multi-purpose)	39 Volts

COMPRESSOR SPECIFICATIONS				
Compressor Model	Description	Maximum System Pressure	Compressor Protection	Capacities
VMAC® S700162	Belt-Drive Rotary Screw	60Hz High Idle: 60 cfm @ 100 psi (1.7 cmm @ 6.9 bar)	Safety Relief Valve: 200 psi (13.8 bar)	1.1 US gal. (4.0L)
		50Hz Low Idle: 40 cfm @ 100 psi (1.1 cmm @ 6.9 bar)	High Temperature Automatic Shutdown: 290°F (143°C)	

IEC 60974-1; IP23S Rated

INSTALLATION

SAFETY PRECAUTIONS

⚠ WARNING

Do not attempt to use this equipment until you have thoroughly read all operating and maintenance manuals supplied with your machine. They include important safety precautions, detailed engine starting, operating and maintenance instructions and parts lists.

ELECTRIC SHOCK can kill.

- **Do not touch electrically live parts such as output terminals or internal wiring.**
- **Insulate yourself from the work and ground.**
- **Always wear dry insulating gloves.**

ENGINE EXHAUST can kill.

- **Use in open, well ventilated areas or vent exhaust outside**

MOVING PARTS can injure.

- **Do not operate with doors open or guards off.**
- **Stop engine before servicing.**
- **Keep away from moving parts**

Only qualified personnel should install, use or service this equipment.

VRD (VOLTAGE REDUCTION DEVICE)

The VRD reduces the OCV (Open Circuit Voltage) at the welding output terminals while not welding to less than 30 VDC when the resistance of the output circuit is above 200Ω (ohms).

The VRD requires that the welding cable connections be kept in good electrical condition because poor connections will contribute to poor starting. Having good electrical connections also limits the possibility of other safety issues such as heat-generated damage, burns and fires.

The machine is shipped with the VRD switch in the “ON” position. (This is the master control for VRD function in CC and CV modes.

To utilize the CrossLinc feature on this product, the VRD needs to remain in the “OFF” position.

Alternatively, if VRD is in the "ON" position, the operator can turn on CrossLinc for CV modes (VRD will be disabled for CV modes) by using the tool provided to access the hidden menu screen. Refer the CONTROLS AND SETTING section for making changes.

To turn VRD “ON” or “OFF”:

- Turn the engine “OFF”
- Diconnect the negative battery cable
- Lower the front panel by removing 4 side panel screws (See Figure A.1)
- Place the VRD switch in the “ON” or “OFF” position (See Figure A.1)

FIGURE A.1

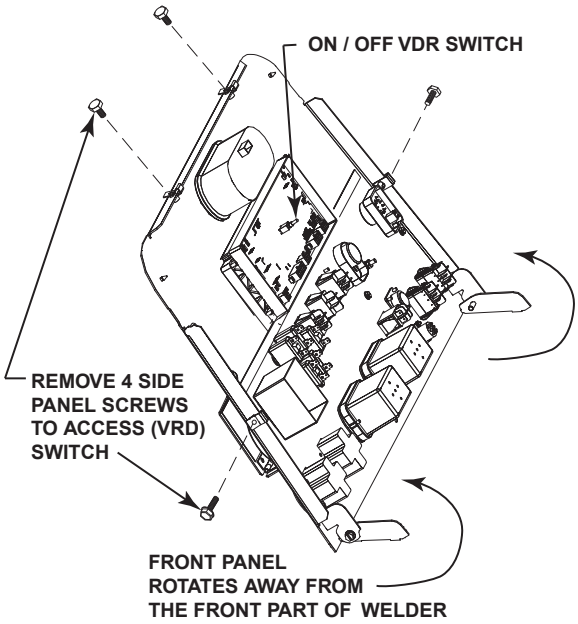

With the VRD switch in the “OFF” position, the VRD lights are non activated.

LOCATION AND VENTILATION

The welder should be located to provide an unrestricted flow of clean, cool air to the cooling air inlets and to avoid restricting the cooling air outlets. Also, locate the welder so that the engine exhaust fumes are properly vented to an outside area.

⚠ WARNING

Air to cool the engine is drawn in the side and exhausted through radiator and case back. It is important that the intake and exhaust air is not restricted. Allow a minimum clearance of 1ft. (0.6m) from the case back and 16 in. (406mm) from either side of the base to a vertical surface. (Failure to resolve these guidelines may result in an overtemp condition resulting in engine shut down).

⚠ WARNING

DO NOT MOUNT OVER COMBUSTIBLE SURFACES

Where there is a combustible surface directly under stationary or fixed electrical equipment, that surface should be covered with a steel plate at least .06”(1.6mm) thick, which should extend not less than 5.90”(150mm) beyond the equipment on all sides.

STORING

1. Store the machine in a cool, dry place when it is not in use. Protect it from dust and dirt. Keep it where it can't be accidentally damaged from construction activities, moving vehicles, and other hazards.
2. Drain the engine oil and refill with fresh oil. Run the engine for about five minutes to circulate oil to all the parts. See the ENGINE OPERATION section manual for details on changing oil.
3. Remove the battery, recharge it, and adjust the electrolyte level. Store the battery in a dry, dark place.

STACKING

Air Vantage® 600X PLUS machines cannot be stacked.

ANGLE OF OPERATION

To achieve optimum engine performance the Air Vantage® 600X PLUS should be run in a level position. The maximum angle of operation for the Deutz® engine is 30 degrees in all directions. When operating the welder at an angle, provisions must be made for checking and maintaining the oil level at the normal (FULL) oil capacity. Also the effective fuel capacity will be slightly less than the specified 25 gal. (94.6L).

LIFTING

The Air Vantage® 600X PLUS weighs approximately 1911 lbs. (866kg) with a full tank of fuel and 1737 lbs. (787kg) less fuel. A lift bale is mounted to the machine and should always be used when lifting the machine.

⚠ WARNING

FALLING EQUIPMENT can cause injury.

- **Lift only with equipment of adequate lifting capacity.**
- **Be sure machine is stable when lifting.**
- **Do not lift this machine using lift bale if it is equipped with a heavy accessory such as trailer or gas cylinder.**
- **Do not lift machine if lift bale is damaged.**
- **Do not operate machine while suspended from lift bale.**

ENVIRONMENTAL LIMITATIONS

The Air Vantage® 600X PLUS Plus is IP23 rated for use in an outdoor environment. The machine should not be subjected to falling water during use nor should any parts of it be submerged in water. Doing so may cause improper operation as well as pose a safety hazard. The best practice is to keep the machine in a dry, sheltered area.

HIGH ALTITUDE OPERATION

At higher altitudes, output derating may be necessary. For maximum rating, derate the welder output in accordance with the guidelines in Table A.1 below for this engine model from the manufacturer:

TABLE A.1 DEUTZ TD2.9L4

Altitude		Power Derating Factor (%)
Meters	Feet	
0	0	100%
500	1,640	100%
1000	3,281	100%
1500	4,921	100%
1680	5,512	100%
2000	6,562	95%
2500	8,202	89%
3000	9,843	82%
3500	11,483	82%
4000	13,123	82%
4500	14,764	79%
5000	16,404	75%
5500	18,045	72%
6000	19,685	69%

HIGH TEMPERATURE OPERATION

At temperatures above 104°F (40°C), output voltage derating may be necessary. For maximum output current ratings, derate welder voltage rating 2 volts for every 21°F (10°C) above 104°F (40°C).

COLD WEATHER STARTING:

With a fully charged battery and OW40 oil, the engine should start satisfactorily down to -20°F (-29C°). If the engine must be frequently started at or below 0°F (-18°C), it may be desirable to install cold-starting aides. For engines with common rail injection, the mixing of petroleum or kerosene and adding of extra low additives is not permissible. Fuels in accordance with ASTM S975 Grade 1D or DIN EN590-Arctic-Diesel may have no petroleum added. Allow the engine to warm up before applying a load or switching to high idle.

⚠ WARNING

Under no conditions should ether or other starting fluids be used with this engine!

TOWING

Use a recommended trailer for use with this equipment for road, in-plant and yard towing by a vehicle(1). If the user adapts a non-Lincoln trailer, they must assume responsibility that the method of attachment and usage does not result in a safety hazard or damage the welding equipment. Some of the factors to be considered are as follows:

1. Design capacity of trailer vs. weight of Lincoln equipment and likely additional attachments.
2. Proper support of, and attachment to, the base of the welding equipment so there will be no undue stress to the framework.
3. Proper placement of the equipment on the trailer to insure stability side to side and front to back when being moved and when standing by itself while being operated or serviced.
4. Typical conditions of use, i.e., travel speed; roughness of surface on which the trailer will be operated; environmental conditions; like maintenance.
5. Conformance with federal, state and local laws.(1)

(1) Consult applicable federal, state and local laws regarding specific requirements for use on public highways.

SERVICE TRUCK AND TRAILER INSTALLATION

The welder should be located to provide an unrestricted flow of clean, cool air to the cooling air inlets and to avoid heated air coming out of the welder recirculating back to the cooling air inlet. Also, locate the welder so that engine exhaust fumes are properly vented to an outside area.

⚠ WARNING

- **Improperly mounted concentrated loads may cause unstable vehicle handling and tires or other components to fail.**
- **Only transport this welding equipment on serviceable vehicles which are rated and designed for such loads.**
- **Distribute, balance and secure loads so vehicle is stable under conditions of use.**
- **Do not exceed maximum rated loads for components such as suspension, axles and tires.**
- **Mount equipment base to metal bed or frame of vehicle. Do not mount the welder using rubber mounts.**
- **Follow vehicle manufacturer's instructions.**
- **Do not install equipment where air flow is restricted. Equipment or the engine may overheat.**
- **Do not weld on the base. Welding on the base may cause fuel tank explosion or fire.**
- **Always ground the equipment frame to the vehicle frame to prevent electric shock and static electricity hazards.**
- **Do not place propane or shielding gas tanks near hot air or exhaust.**

PRE-OPERATION ENGINE AND COMPRESSOR SERVICE

READ the engine operation, compressor operation, and maintenance instructions supplied with this machine.

⚠ WARNING

- **Stop engine and allow to cool before fueling.**
- **Do not smoke when fueling.**
- **FIll fuel tank at a moderate rate and do not overfill.**
- **Wipe up spilled fuel and allow fumes to clear before starting engine.**
- **Keep sparks and flame away from tank.**

ENGINE OIL

The Air Vantage® 600X PLUS is shipped with the engine crankcase filled with high quality SAE 10W-30 Oil that meets (API class CJ-4 or better) for diesel engines. Check the oil level before starting the engine. If it is not up to the full mark on the dip stick, add oil as required. Check the oil level every four hours of running time during the first 50 running hours. The oil change interval is dependent on the quality of the oil and the operating environment. Refer to the Engine Operator's Manual for more details on specific oil recommendations, break-in information, and proper service and maintenance intervals.

FUEL

⚠ WARNING

USE DIESEL FUEL ONLY

Fill the fuel tank with clean, fresh fuel. The capacity of the tank is 25 gal. (94.6L). When the fuel gauge reads empty the tank contains approximately 2 gal. (7.6L) of reserve fuel.

NOTE: A fuel shut off valve is located just before the pre-filter/sediment filter. Place the valve in the closed position when the welder is not used for extended periods of time.

ENGINE COOLING SYSTEM

⚠ WARNING

HOT COOLANT can burn skin.
Do not remove cap if radiator is hot.

The welder is shipped with the engine and radiator filled with a 50% mixture of ethylene glycol and water. See the MAINTENANCE section and the engine Operator's Manual for more information on coolant.

BATTERY CONNECTION

⚠ CAUTION

Use caution as the electrolyte is a strong acid that can burn skin and damage eyes.

The Air Vantage® 600X PLUS is shipped with the negative battery cable disconnected. Make certain that the RUN/STOP/IDLE switch is in the STOP position. Remove the four screws from the battery tray using a screwdriver or a 3/8"(10mm) socket. Attach the negative battery cable to the negative battery terminal and tighten using a 1/2"(13mm) socket or wrench.

NOTE: This machine is furnished with a wet charged battery; if unused for several months, the battery may require a booster charge. Be careful to charge the battery with the correct polarity. (See Battery in MAINTENANCE section)

⚠ WARNING

GASES FROM BATTERY can explode.

- **Keep sparks, flame and cigarettes away from battery.**

To prevent EXPLOSION when:

- **INSTALLING A NEW BATTERY — disconnect negative cable from old battery first and connect to new battery last.**
- **CONNECTING A BATTERY CHARGER — remove battery from welder by disconnecting negative cable first, then positive cable and battery clamp. When reinstalling, connect negative cable last. Keep well ventilated.**
- **USING A BOOSTER — connect positive lead to battery first then connect negative lead to negative battery lead at engine foot.**

BATTERY ACID can burn eyes and skin.

- **Wear gloves and eye protection and be careful when working near battery.**
- **Follow instructions printed on battery.**

IMPORTANT: To prevent ELECTRICAL DAMAGE WHEN:

a) Installing new batteries.

b) Using a booster.

Use correct polarity — **Negative Ground.**

EXHAUST OUTLET PIPE

Remove cap from exhaust pipe protruding from roof.

Using the clamp provided secure the outlet pipe to the outlet tube with the pipe positioned such that it will direct the exhaust in the desired direction away from the air intake. Tighten using an internal socket or allen wrench.

SPARK ARRESTOR

Some federal, state or local laws may require that gasoline or diesel engines be equipped with exhaust spark arrestors when they are operated in certain locations where unarrested sparks may present a fire hazard.
The muffler included with this welder does not qualify as a spark arrestor. When required by local regulations, a suitable spark arrestor, such as the K2864-1 must be installed and properly maintained.

⚠ WARNING

An incorrect spark arrestor may lead to damage to the engine or adversely affect performance.

AIR CLEANER INSTALL

All parts below are shipped with the machine in a separate box attached to the crate. (see Figure A.2)

- Remove cap from air intake hose and muffler exhaust attached on machine. Insert air cleaner into bracket between the two ridges of a larger diameter. Position the vacuator 6 o'clock.
- Tighten air hose clamp just below service indicator to hold clamp while pushing air cleaner onto hose, once hose is in place loosen air hose clamp slide down and tighten clamp.
- Install 2 hex head screws, washers and nuts to mounting bracket securing air cleaner.
- Install Inlet Hood to Air Cleaner, tighten clamp securely.

SERVICE INDICATOR

Air cleaner service indicator provides a Go/No-Go visual indication of useful filter service life.

FIGURE A.2

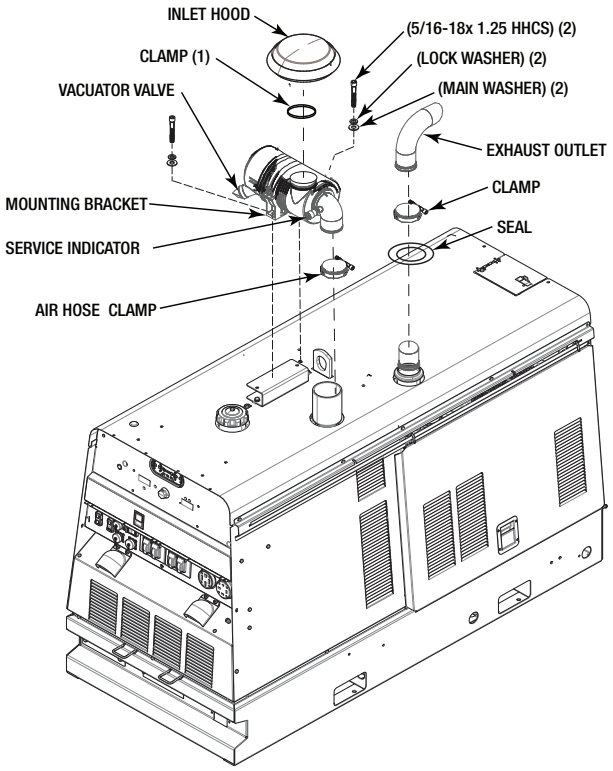

COMPRESSOR SYSTEM

The Air Vantage® 600X PLUS has an integrated VMAC compressor system installed on the machine. The compressor system is protected from over pressurization by a mechanical inlet control in the compressor that regulates airflow in response to the demand. There is also a 200 psi (1,379 kPa) pressure relief valve in the air/oil separation tank to protect the system from over pressurization. If the oil temperature exceeds 290°F (143°C) the clutch is disengaged, draining the high-pressure air and reducing the load on the engine.

VMAC recommends the use of certified and approved high performance synthetic oil which is used to lubricate the compressor. The air/oil separator tank removes the remaining oil. The oil is passed through a replaceable filter to remove contaminants. The compressor intake is equipped with a replaceable paper air filter element.

Refer to the Compressor Operator's Manual for more details on the system.

MACHINE GROUNDING

Because this portable engine driven welder creates its own power, it is not necessary to connect its frame to an earth ground, unless the machine is connected to premises wiring (home, shop, etc.).

To prevent dangerous electric shock, other equipment powered by this engine driven welder must:

a) be grounded to the frame of the welder using a grounded type plug, or

b) be double insulated.

When this welder is mounted on a truck or trailer, its frame must be securely connected to the metal frame of the vehicle. When this engine driven welder is connected to premises wiring such as that in a home or shop, its frame must be connected to the system earth ground.

In general, if the machine is to be grounded, it should be connected with a #8 or larger copper wire to a solid earth ground such as a metal ground stake going into the ground for at least 10 ft. (3.1m) or to the metal framework of a building which has been effectively grounded. Check local codes for alternate means of grounding electrical equipment. A machine grounding stud marked with the symbol is provided on the ⏚ front of the welder.

AUXILIARY POWER RECEPTACLES

Start the engine and set the 50Hz/60Hz Mode Switch to "50Hz AUXILIARY POWER" position. Voltage is now correct at the receptacles for auxiliary power. This must be done before a tripped RCD can be reset properly.

The auxiliary power of the Air Vantage® 600X PLUS consists of one 32 Amp, 415VAC Australian 5650532 receptacle and two 15 Amp VAC Australian 56SO315A receptacles, all with RCD protection.

The auxiliary power capacity is 23,000 watts three phase or 7,200 watts single phase continuous of 50 Hz power. The auxiliary power capacity rating in watts is equivalent to volt-amperes at unity power factor.

NOTE: Output voltage is within ± 10% at all loads up to rated capacity.

415/240 VAC RECEPTACLES AND RCD

The RCD (Residual Current Device) protects the 415 VAC power receptacle and the two 240 VAC auxiliary power receptacles. The device protects against electric shock if current leakage is detected. The RCD is rated for 40 amps and it has 30 milliamp tripping current.

The 240 VAC auxiliary power receptacles should only be used with three wire grounded type plugs or approved double insulated tools with two wire plugs. The current rating of any plug used with the system must be at least equal to the current capacity of the associated receptacle.

CIRCUIT BREAKERS

All auxiliary power is protected by circuit breakers. The 415 VAC receptacle has a 32 amp circuit breaker. Both 240 VAC receptacles each have a 15 amp circuit breaker. Additionally, the 120V wire feeder connector has a 20 amp circuit breaker. (See Figure A.3)

FIGURE A.3 - AUXILIARY POWER RECEPTACLES

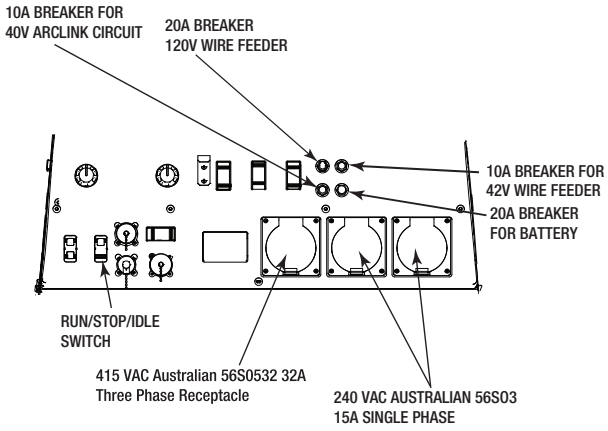

WELDING OUTPUT CABLES

With the engine off, route the electrode and work cables through the strain relief bracket provided on the front of the base and connect to the terminals provided. These connections should be checked periodically and tightened if necessary.

Listed in Table A.2 are copper cable sizes recommended for the rated current and duty cycle. Lengths stipulated are the distance from the welder to work and back to the welder again. Cable sizes are increased for greater lengths primarily for the purpose of minimizing cable voltage drop.

TABLE A.2

OUTPUT CABLE GUIDELINES						
Amperes	Percent Duty Cycle	CABLE SIZES FOR COMBINED LENGTHS OF ELECTRODE AND WORK CABLES [RUBBER COVERED COPPER - RATED 167°F (75°C)]**				
		0 to 50 Ft.	50 to 100 Ft.	100 to 150 Ft.	150 to 200 Ft.	200 to 250 Ft.
200	60	2	2	2	1	1/0
200	100	2	2	2	1	1/0
250	30	3	3	2	1	1/0
250	40	2	2	1	1	1/0
250	60	1	1	1	1	1/0
250	100	1	1	1	1	1/0
300	60	1	1	1	1/0	2/0
300	100	2/0	2/0	2/0	2/0	3/0
350	40	1/0	1/0	2/0	2/0	3/0
400	60	2/0	2/0	2/0	3/0	4/0
400	100	3/0	3/0	3/0	3/0	4/0
500	60	2/0	2/0	3/0	3/0	4/0
600	60	3/0	3/0	3/0	4/0	2-3/0
600	80	2-1/0	2-1/0	2-1/0	2-2/0	2-3/0
600	100	2-1/0	2-1/0	2-1/0	2-2/0	2-3/0

** Tabled values are for operation at ambient temperatures of 104°F (40°C) and below. Applications above 104°F (40°C) may require cables larger than recommended, or cables rated higher than 167°F (75°C).

PULSE WELDING

When pulse welding, always use 4/0 cable. The cables must be sized based upon the peak current of the pulse waveform, not the average current. Do not coil the electrode or work cable. Limit the combined length of the electrode and work cable to 60 feet. Undersized cables, coiled cables and long lengths all increase cable inductance and lower pulse welding performance.

CABLE INSTALLATION

Install the welding cables to your Air Vantage® 600X PLUS as follows.

⚠ WARNING

1. The engine must be OFF to install welding cables.
2. Remove the flanged nuts from the terminals.
3. Connect the electrode holder and work cables to the weld output terminals. The terminals are identified on the case front.
4. Tighten the flanged nuts securely.
5. Be certain that the metal piece you are welding (the “work”) is properly connected to the work clamp and cable.
6. Check and tighten the connections periodically.

⚠ CAUTION

- **Loose connections will cause the output terminals to overheat. The terminals may eventually melt.**
- **Do not cross the welding cables at the output terminal connection. Keep the cables isolated and separate from one another.**

CABLE INDUCTANCE AND ITS EFFECTS ON WELDING

Excessive cable inductance will cause the welding performance to degrade. There are several factors that contribute to the overall inductance of the cabling system including cable size and loop area. The loop area is defined by the separation distance between the electrode and work cables and the overall welding loop length. The welding loop length is defined as the total of length of the electrode cable (A) + work cable (B) + work path (C) (See Figure A.5).

FIGURE A.5

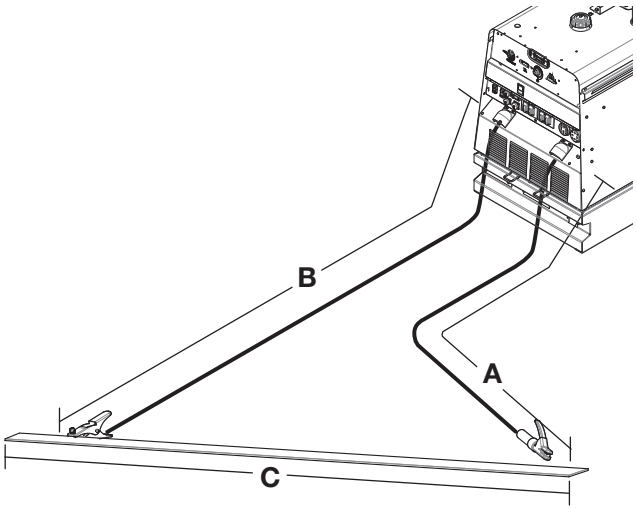

To minimize inductance always use the appropriate size cables, and whenever possible, run the electrode and work cables in close proximity to one another to minimize the loop area. Since the most significant factor in cable inductance is the welding loop length, avoid excessive lengths and do not coil excess cable. For long work piece lengths, a sliding ground should be considered to keep the total welding loop length as short as possible.

Electrode Voltage Sensing

The remote electrode sense lead (67) is built into the 5-pin ArcLink control cable and is always connected to the wire drive feed plate when an ArcLink wire feeder is present. Enabling or disabling electrode voltage sensing is application specific, and automatically configured by the active weld mode.

Voltage sense leads requirements are based on the weld process (See Table A.3)

TABLE A.3

Process	Electrode Voltage Sensing (1)
GMAW	67 lead
FCAW	67 lead
GTAW	Voltage sense at studs
SMAW	Voltage sense at studs

(1) The electrode voltage sense lead (67) is automatically enabled by the weld process, and integral to the 5 pin ArcLink control cable.

CONTROL CABLE CONNECTIONS

General Guidelines

Genuine Lincoln control cables should be used at all times (except where noted otherwise). Lincoln cables are specifically designed for the communication and power needs of the engine driven welder and Power Feed® systems. Most are designed to be connected end to end for ease of extension. Generally, it is recommended that the total length not exceed 200 ft (61 m). The use of non-standard cables, especially in lengths greater than 25 feet, can lead to communication problems (system shutdowns), poor motor acceleration (poor arc starting), and low wire driving force (wire feeding problems). Always use the shortest length of control cable possible, and **DO NOT coil excess cable.**

Regarding cable placement, best results will be obtained when control cables are routed separate from the weld cables. This minimizes the possibility of interference between the high currents flowing through the weld cables, and the low level signals in the control cables.

Connection Between Air Vantage® 600X PLUS and ArcLink® Compatible Wire Feeders

The 5-pin ArcLink® control cable connects the Air Vantage® 600X PLUS to the wire feeder. The control cable consists of two power leads, one twisted pair for digital communication, and one lead for voltage sensing. The 5-pin ArcLink® connection on the Air® Vantage 600X PLUS is located on control panel. The control cable is keyed and polarized to prevent improper connection. Best results will be obtained when control cables are routed separate from the weld cables, especially in long distance applications. The recommended combined length of the ArcLink® control cable network should not exceed 200 ft (61 m).

CROSSLINC TECHNOLOGY

This machine features CrossLinc technology, which allows for remote control of the welding output via the weld cables rather than a control cable. As result, the control cable is no longer needed when connected to a CrossLinc compatible wire feeder or remote control.

This machine will function with all CrossLinc compatible wire feeders except for the oldest LN-25X models. Incompatible models include:

Code # 12432

Code # 12504

REMOTE CONTROL CONNECTIONS

The Air Vantage® 600X PLUS is equipped with a 12-pin and a 14-pin connector. To enable remote control capabilities, the LOCAL/REMOTE switch must be in the REMOTE position.

50Hz / 60Hz MODE SWITCH - Place in "FULL WELD OUTPUT" for full weld output or "50Hz AUXILIARY OUTPUT for derated weld output.

CONSTANT CURRENT WELD MODES

For the **DOWNHILL PIPE** or **CC-STICK** weld mode selector switch positions, remote setting of the preset arc current is set through the 12 pin connector or the 14 pin connector depending on the setup menu setting (12 pin connector is the factory default setting). The OUTPUT CONTROL knob is used to set the maximum arc current preset range for the remote input. The left digital output display will show the maximum setting for the arc current preset range as set by the OUTPUT CONTROL knob.

For the **TOUCH START TIG** weld mode selector switch position, remote setting of the preset arc current is set through the 12 pin connector (typically using a foot amptrol). The OUTPUT CONTROL knob is used to set the maximum arc current preset range for the remote input. The left digital output display will show the maximum setting for the arc current preset range as set by the OUTPUT CONTROL knob.

EXAMPLE: When the OUTPUT CONTROL on the welder is set to 200 amps, the arc current preset range on the remote control will preset over the range from minimum to 200 amps, rather than the full minimum to maximum preset arc current range. Any preset arc current range that is less than the full range provides finer arc current preset resolution for more fine tuning of the output.
For the **ARC GOUGING** weld mode selector switch position, remote setting of the preset arc current is set through the 12 pin connector. The remote input sets the arc current preset over the full range from minimum to maximum. The left digital output display will show the maximum setting for the arc current preset range as set by the OUTPUT CONTROL knob.

CONSTANT VOLTAGE WELD MODES

For operation with a control cable wire feeder:

With the **CV-WIRE** weld mode selector switch position **and the WELD TERMINALS ON switch in the REMOTE position**, remote setting of the preset arc voltage is set through the 14 pin connector. The remote input sets the arc voltage preset range from 10.0V to 45.0V. The right digital output display will show the arc voltage preset.

For operation with an across the arc wire feeder:

With the **CV-WIRE** weld mode selector switch position **and the WELD TERMINALS ON switch in the ON position**, remote setting of the preset arc voltage is set through the 12 pin connector. The remote input sets the arc voltage preset range from 10.0V to 45.0V. The right digital output display will show the arc voltage preset.

When a CrossLinc device is connected, the remote control is ignored. The CrossLinc device provides the remote output control to set values.
For the **ARCLINK** weld mode selector switch position, remote capability is possible only with an ArcLink compatible digital remote control through the 5 pin connector.
NOTE: To connect accessories with a 6 pin connector, use the included 12-pin to 6-pin adaptor (K2909-1).

WELDING TERMINALS

The Air Vantage® 600X PLUS is equipped with a toggle switch for selecting "hot" welding terminals when in the WELD TERMINALS ON position or "cold" welding terminals when in the REMOTELY CONTROLLED position. When in ArcLink, the output of the weld terminals is controlled by the mode selected.

ACCESSORY CONNECTION DIAGRAMS

⚠ WARNING

Shut off welder before making or removing any electrical connections.

When connecting an accessory to the Air Vantage® 600X PLUS, the following steps should be taken:

- Shut off the welder.
- Connect your leads for the desired accessory. For electrode positive, connect the electrode cable to the "+" terminal of the welder and work cable to the "-" terminal of the welder. For electrode negative, connect the electrode cable "-" terminal of the welder and work cable to the "+" terminal of the welder. Installation diagrams for common setups are included on the following pages.
- Set the WIRE FEEDER VOLTMETER switch to either "+" or "-" as required by the electrode type (See Figure A.6).
- The switch positions on the Air Vantage® 600X PLUS will be dependent on the type of accessory chosen. Reference Table A.4 and Figure A.6 for guidance on how to properly set up each accessory.

FIGURE A.6

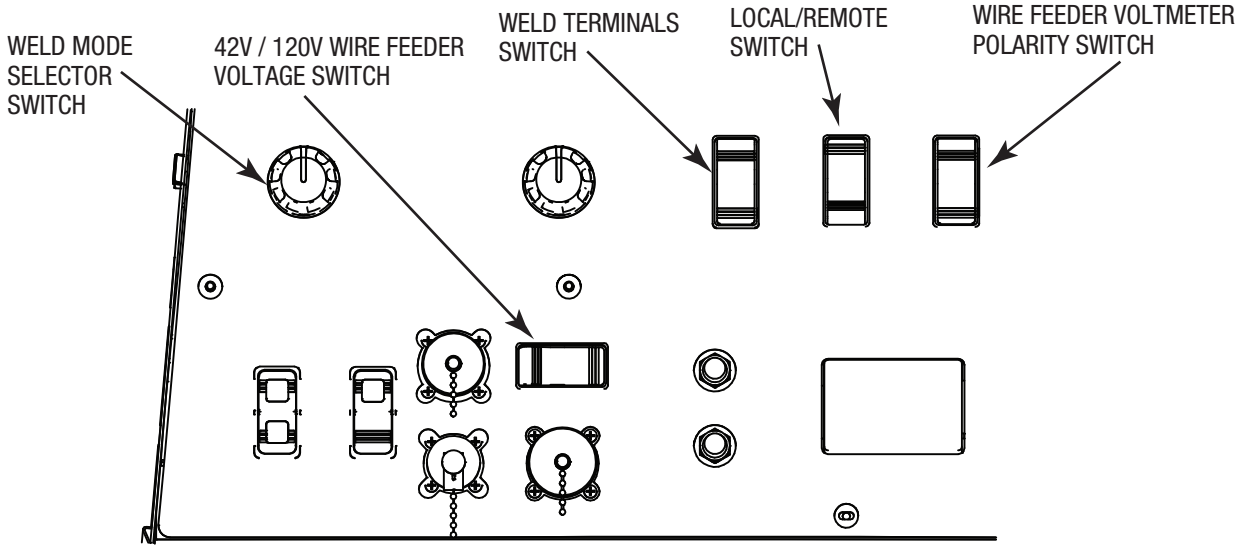

TABLE A.4

ACCESSORY	WELD MODE SWITCH	WELD TERMINALS SWITCH	LOCAL/REMOTE SWITCH	115/42VAC SWITCH
CrossLinc Feeder	CV	ON	REMOTE	N/A
CrossLinc Remote	Stick, Tig, Gouging	ON	REMOTE	N/A
Across The Arc Feeder (Non CrossLinc)	CV	ON	LOCAL	N/A
42VAC Bench Feeder w/Voltage Control (Flex Feeds, LN-25 Dual)	CV	REMOTE	REMOTE	42VAC
42VAC Bench Feeder w/o Voltage Control (LF Feeders)	CV	REMOTE	REMOTE	42VAC
Submerged Arc Controllers (NA-3, LT-7)	CV/CC	REMOTE	REMOTE	115VAC
ArcLink Feeders (Power Feed)	ArcLink	N/A	N/A	N/A
TIG Module	TIG	REMOTE	REMOTE	N/A
Spool Gun Module	CV	ON	LOCAL	N/A

CROSSLINC SETUP CV

FIGURE A.7

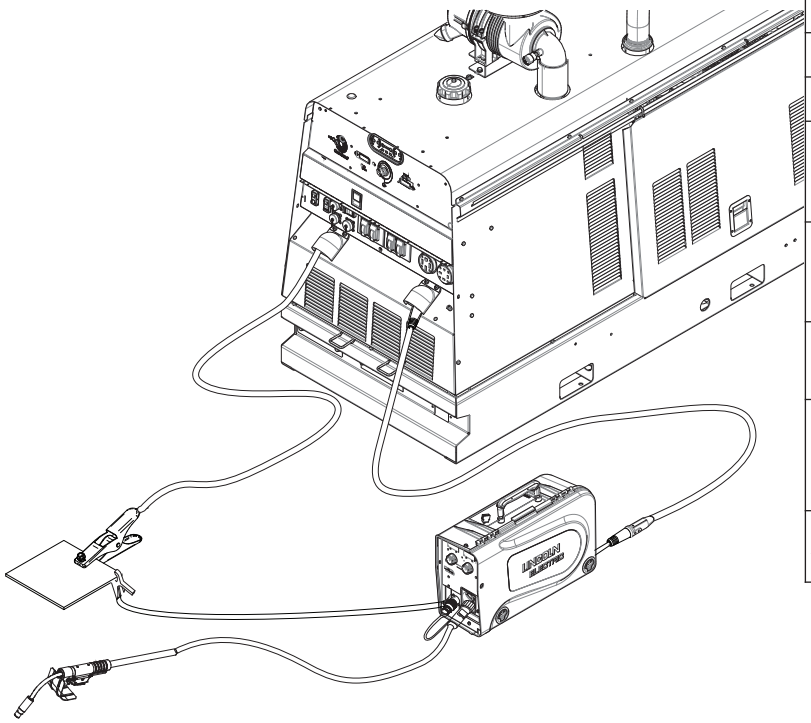

Item	Desc.	K#
Machine	Air Vantage® 600X PLUS	K4794-2
Feeder	LN-25X w/TVT	K4267-2
Gun	K126® PRO Innershield® 350A FCAW-SS Welding Gun 15 ft 1/16-5/64	K126-12
Work Cable	Weld Power Cable - Lug to Lug (3/0, 600A, 60%) - 35 ft (10.6 m)	K1842-35
Work Clamp	GC-500 Work Clamp - 500A, 60% Duty Cycle	K910-2
Weld Power Cable	Weld Cable - Tweco® Plug & Receptacle (3/0, 600A, 60%) - 50 ft (15.3 m)	K2485-3
Adapter	Lug to Tweco Style Receptacle Adapter	K2487-1

CROSSLINC SETUP CC

FIGURE A.8

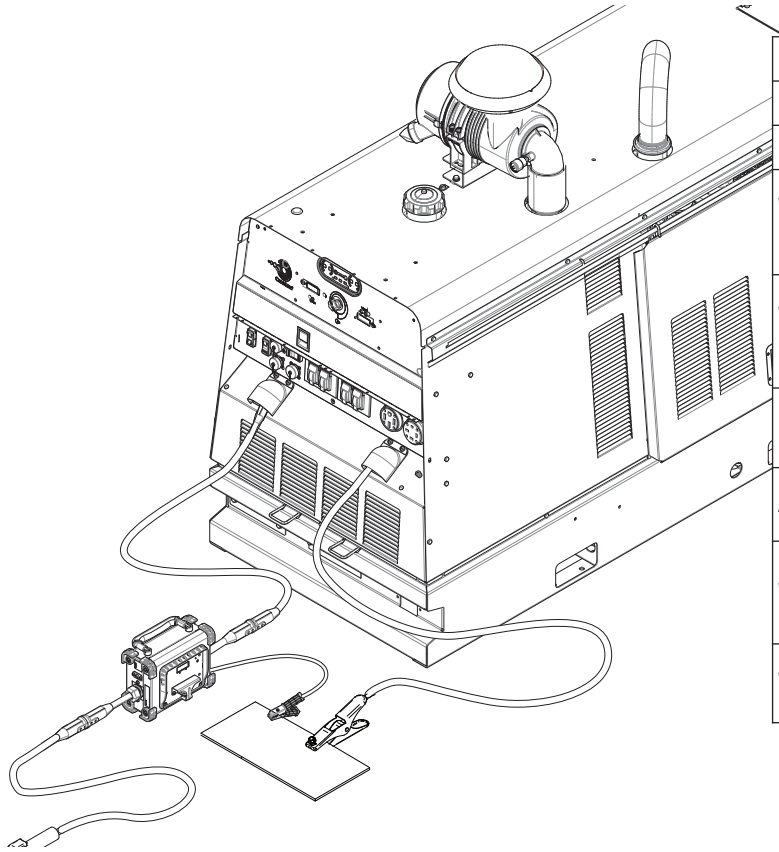

Item	Desc.	K#
Machine	Air Vantage® 600X PLUS	K4794-2
Remote	CrossLinc® Remote	K4345-1
Weld Power Cable	Weld Cable - Tweco® Plug & Receptacle (3/0, 600A, 60%) - 50 ft (15.3 m)	K2485-3
Weld Power Cable	Weld Cable - Tweco® Male & Open End (3/0, 600A, 60%)- 10 ft (3 m)	K2483-3
Electrode Holder	EH-405HD Electrode Holder - 400A, 60% Duty Cycle	K909-8
Adapter	Lug to Tweco Style Receptacle Adapter.	K2487-1
Work Cable	Weld Power Cable - Lug to Lug (3/0, 600A, 60%) - 35 ft (10.6 m)	K1842-35
Work Clamp	GC-500 Work Clamp - 500A, 60% Duty Cycle	K910-2

DUAL ARC SETUP

Item	Desc.	K#
Machine	Air Vantage® 600X PLUS	K4794-2
Feeder	LN-25X w/TVT	K4267-2
Gun	K126® PRO Innershield® 350A FCAW-SS Welding Gun 15 ft 1/16-5/64	K126-12
Work Cable	Weld Power Cable - Lug to Lug (3/0, 600A, 60%) - 35 ft (10.6 m)	K1842-35
Work Clamp	GC-500 Work Clamp - 500A, 60% Duty Cycle	K910-2
Weld Power Cable	Weld Cable - Tweco® Plug & Receptacle (3/0, 600A, 60%) - 50 ft (15.3 m)	K2485-3
Adapter	Lug to Tweco Style Receptacle Adapter	K2487-1
Machine	Invertec V275-S	K2269-1

FIGURE A.9

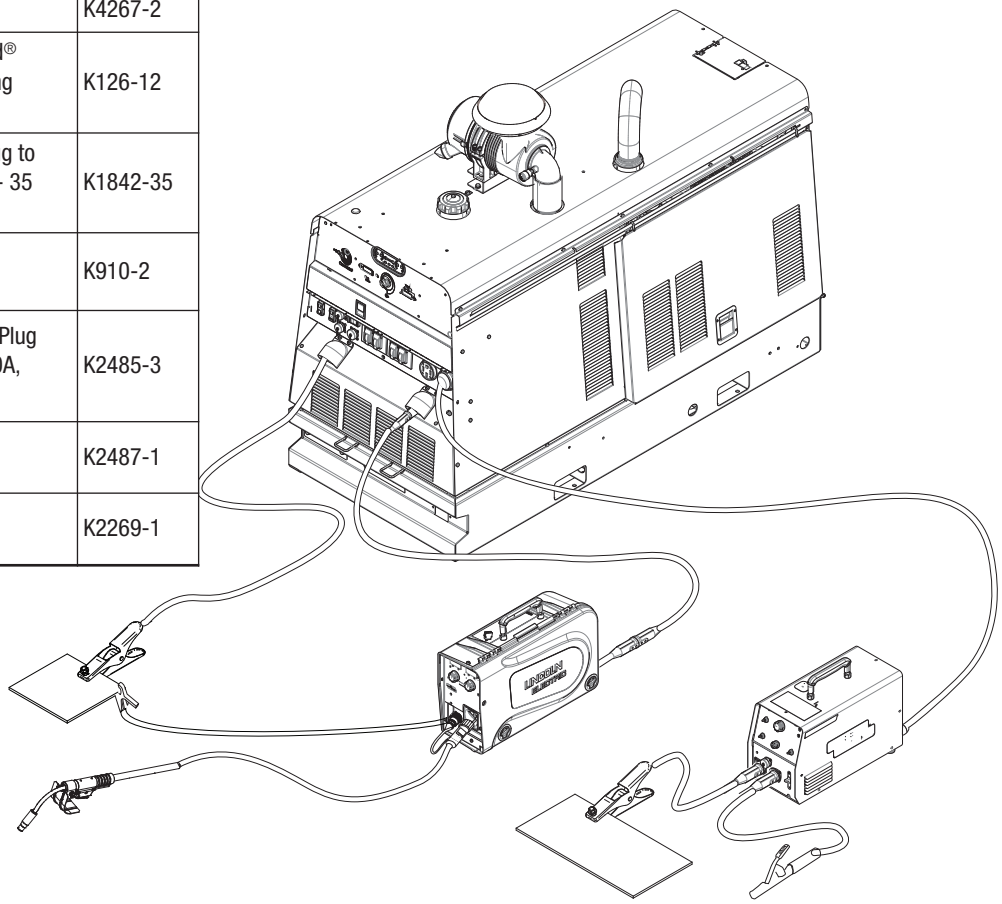

TIG MODULE

Item	Desc.	K#
Machine	Air Vantage 600X PLUS	K4794-2
Accessory	TIG Module	K930-2
Control Cable	9 - 14 Pin Cable	K936-1
Torch	PTA-26 (25 ft)	K1783-4
Foot Pedal	Foot Amptrol (25 ft)	K870
Electrode Cable (Power Source to Module)	Weld Power Cable - Lug to Lug (3/0, 600A, 60%) - 10 ft (3 m)	K1842-10
Work Cable (Power Source to Module)	Weld Power Cable - Lug to Lug (3/0, 600A, 60%) - 10 ft (3 m)	K1842-10
Work Lead	Work Lead - Lug & GC500 Ground Clamp (2/0, 350A, 60%) - 15 ft (15.3 m)	K2150-10
Adapter	Lug to Tweco Style Receptacle Adapter	K2487-1

FIGURE A.10

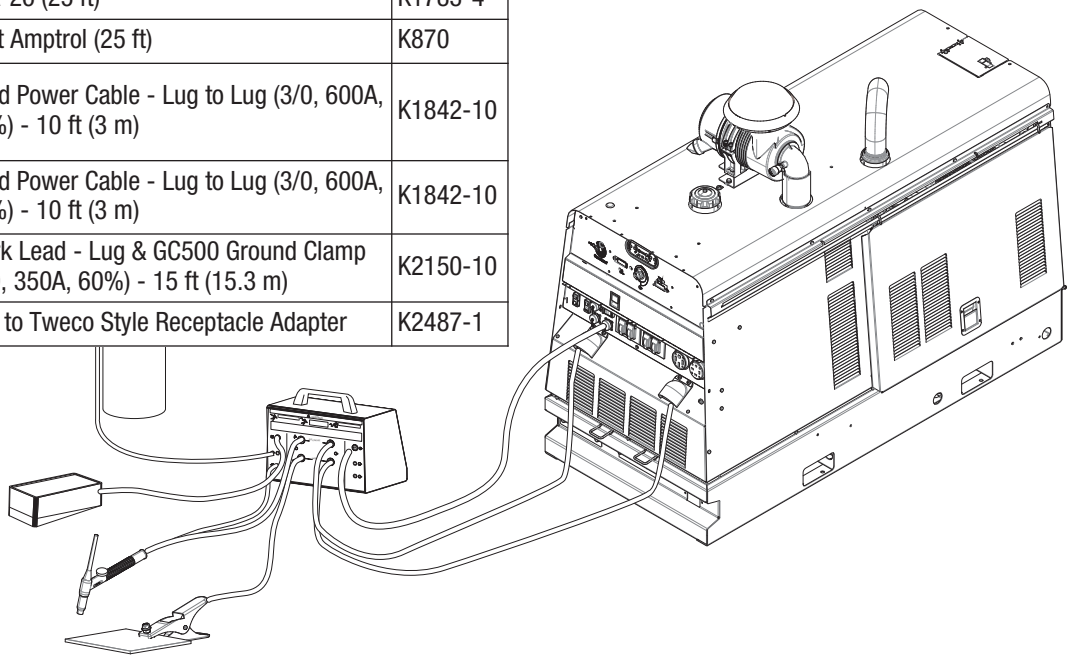

SPOOL GUN MODULE

Item	Description	K#
Machine	Air Vantage 600X PLUS	K4794-2
Accessory	Spool Gun Module	K488
Control Cable	Control Cable, Weld Cable, Gas Hose	K691-10
Gun	Magnum SG	K487-25
Work Lead	Work Lead - Lug & GC500 Ground Clamp (2/0, 350A, 60%) - 15 ft (15.3 m)	K2150-10

FIGURE A.11

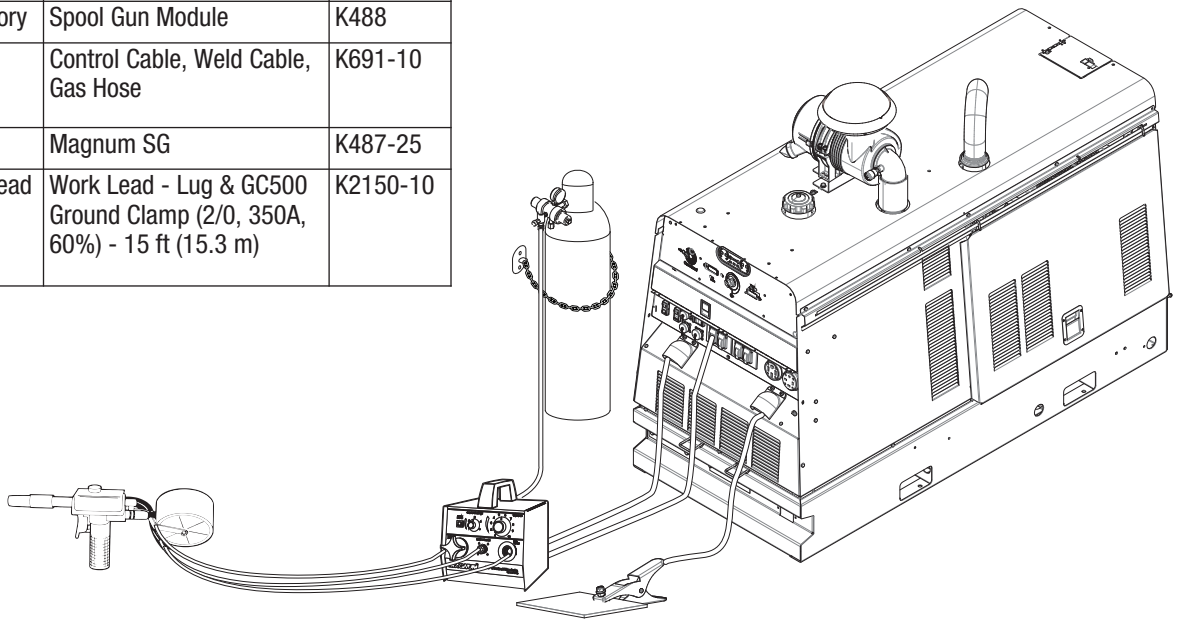

OPERATION

SAFETY INSTRUCTIONS

Read and understand this entire section before operating your machine.

⚠ WARNING

Do not attempt to use this equipment until you have thoroughly read all operating and maintenance manuals supplied with your machine. They include important safety precautions, detailed engine starting, operating and maintenance instructions and parts lists.

ELECTRIC SHOCK can kill.

- **Do not touch electrically live parts such as output terminals or internal wiring.**
- **Insulate yourself from the work and ground.**
- **Always wear dry insulating gloves.**

ENGINE EXHAUST can kill.

- **Use in open, well ventilated areas or vent exhaust outside**
- **Do not stack anything near the engine.**

MOVING PARTS can injure.

- **Do not operate with doors open or guards off.**
- **Stop engine before servicing.**
- **Keep away from moving parts**

Only qualified personnel should operate this equipment.

ADDITIONAL SAFETY PRECAUTIONS

Always operate the welder with the sliding door closed and the side panels in place as these provide maximum protection from moving parts and insure proper cooling air flow.

RECOMMENDED APPLICATIONS

WELDER - The Air Vantage® 600X PLUS provides excellent constant current DC welding output for stick (SMAW) and TIG (GTAW) welding. The Air Vantage® 600X PLUS also provides excellent constant voltage DC welding output for MIG (GMAW), Innershield (FCAW), Outershield (FCAW-G) and Metal Core (GMAW-C) welding. In addition the Air Vantage® 600X PLUS can be ued for Arc Gouging with carbons up to 3/8”(9.5mm) in diameter.

The Air Vantage® 600X PLUS is **NOT RECOMMENDED** for pipe thawing.

⚠ WARNING

Pipe Thawing with an arc welder can cause fire, explosion, damage to electric wiring or to the arc welder if done improperly.

The use of an arc welder for pipe thawing is not approved by the CSA, nor is it recommended or supported by Lincoln Electric.

GENERATOR -The Air Vantage® 600X PLUS provides smooth 120/ 240 VAC single phase and 415 three phase output for auxiliary
power and emergency standby power.

COMPRESSOR -The Air Vantage® 600X PLUS provides a air supply of 60cfm @ 100 psi (1.7 cmm @ 6.9 bar) during 60Hz operation, or 40cfm @ 100psi (1.1 @ 6.9 bar) during 50Hz operation..

ADD FUEL

⚠ WARNING

DIESEL FUEL can cause fire.

- **Stop engine while fueling.**
- **Do not smoke when fueling.**
- **Keep sparks and flame away from tank.**
- **Do not leave unattended while fueling.**
- **Wipe up spilled fuel and allow fumes to clear before starting engine.**
- **Do not overfill tank, fuel expansion may cause overflow.**

USE DIESEL FUEL ONLY

- **Remove the fuel tank cap.**
- **Fill the tank. DO NOT FILL THE TANK TO THE POINT OF OVERFLOW.**
- **Replace the fuel cap and tighten securely.**
- **See Engine Owner's Manual for specific fuel recommendations.**

BREAK-IN PERIOD

The engine will use a small amount of oil during its “break-in” period. The break-in period is about 50 running hours. Check the oil every four hours during break-in. Change the oil after the first 50 hours of operation. Thereafter, follow the engine service and maintenance schedule located in the Engine Operator's Manual.

⚠ CAUTION

During break-in, subject the engine driven welder to moderate loads. Avoid long periods running at idle. Before stopping the engine, remove all loads and allow the engine to cool several minutes.

ENGINE OPERATION

Before starting the engine:

- Be sure the machine is on a level surface.
- Open side engine door and remove the engine oil dipstick and wipe it with a clean cloth. Reinsert the dipstick and check the level on the dipstick.
- Add oil (if necessary) to bring the level up to the full mark. Do not overfill. Close engine door.
- Check radiator for proper coolant level. (Fill if necessary).
- See Engine Owner's Manual for specific oil and coolant recommendations.

⚠ CAUTION

It is extremely important to have the compressor system power switch in the “OFF” position when starting the engine. Failure to observe this may result in loss of clutch life.

STARTING THE ENGINE

1. Remove all plugs connected to the AC power receptacles.
2. Set RUN / STOP / IDLE switch to AUTO IDLE / RUN position.
3. Press START / GLOW PLUG switch and hold until machine turns overs
4. Release the engine START / GLOW PLUG switch immediately when the engine starts.
5. The engine will run at high idle speed for approximately 12 seconds and then drop to low idle speed (60Hz mode only). If machine is in 50 Hz mode, engine will start in low idle and stay at low idle. Allow the engine to warm up at low idle for several minutes before applying a load and/or switching to high idle.

NOTE: Allow a longer warm up time in cold weather.

⚠ CAUTION

- **Do not allow the starter motor to run continuously for more than 20 seconds.**
- **Do not push the START button while the engine is running because this can damage the ring gear and/or the starter motor.**
- **If the Engine Protection or Battery Charging Lights do “not” turn off shortly after starting the engine shut off the engine immediately and determine the cause.**

STOPPING THE ENGINE

Remove all welding and auxiliary power loads and allow the engine to run at low idle speed for a few minutes to cool the engine.

Ensure the compressor has been deactivated. If not, refer to the CONTROLS AND SETTINGS section to properly shut down the compressor.

Turn off the engine by placing the RUN / STOP / IDLE switch in the STOP position.

NOTE: A fuel shut off valve is located on the fuel pre-filter.

⚠ CAUTION

The compressor clutch can experience premature failure if the compressor system is not deactivated before engine shutdown.

CONTROLS AND SETTINGS

All welder and engine controls are located on the case front panel. Refer to Figure B.1 and the explanations that follow.

FIGURE B.1 CASE FRONT PANEL CONTROLS

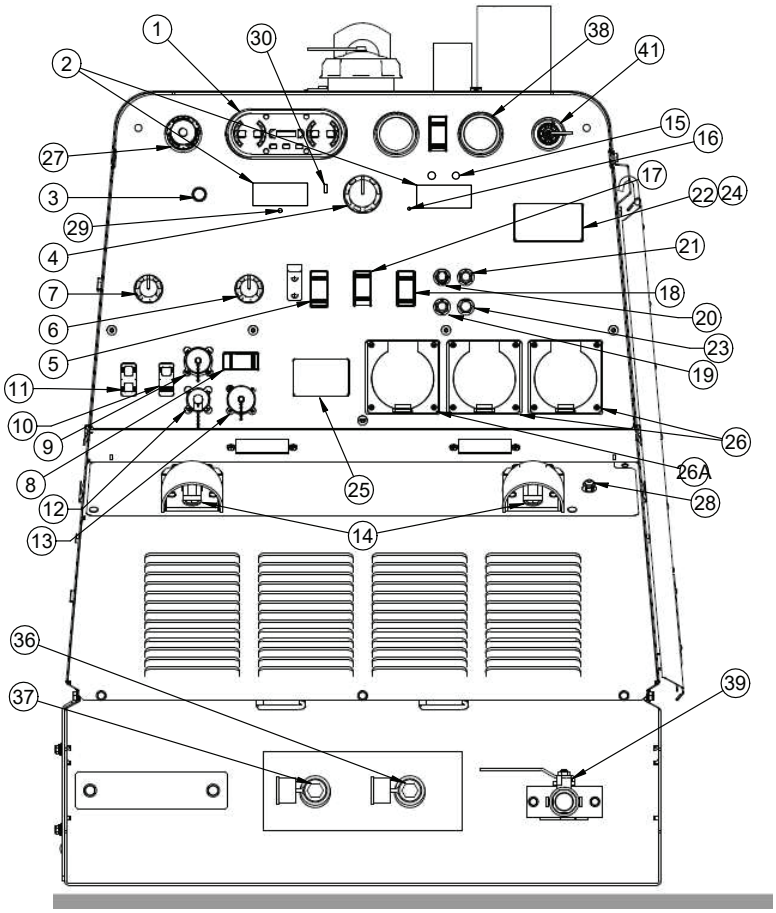

SYSTEM CONTROLS

1. DASHBOARD GAUGE - The dash board gauge displays 5 gauges (Figure B.2):

FIGURE B.2

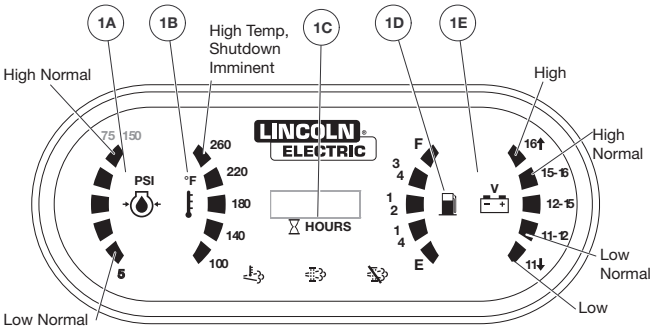

1A. OIL PRESSURE - The gauge displays the engine oil pressure when the engine is running.

1B. ENGINE TEMPERATURE - The gauge displays the engine coolant temperature.

1C. HOUR METER - The hour meter displays the total time that the engine has been running. This meter is a useful indicator for scheduling preventive maintenance.

1D. FUEL LEVEL - Displays the level of diesel fuel in the fuel tank.

The operator must watch the fuel level closely to prevent running out of fuel.

1E. BATTERY VOLTAGE INDICATOR - Displays the battery voltage and indicates that the charging system is functioning properly

NOTE: The respective icons for oil pressure, coolant temperature, fuel level and battery voltage are white. They will turn red when outside normal operating ranges.

2. DIGITAL OUTPUT METERS - The digital meters allow the preset arc output voltage (CV-WIRE mode) or preset arc current (CC-STICK, DOWNHILL PIPE, ARC GOUGING and TIG modes) to be set prior to welding using the OUTPUT CONTROL dial. During welding, the meters will display the actual output voltage (VOLTS) and current (AMPS). A memory feature holds the display of both meters on for seven seconds after welding is stopped. This allows the operator to read the actual current and voltage just prior to when welding was ceased.

While the display is being held the left-most decimal point in each display will be flashing. The accuracy of the meters is +/- 3%.

The meters will display all dashes for preset when ArcLink® mode is selected.

3. **CROSSLINC INDICATOR LIGHT -** When a CrossLinc enabled device is connected with the machine using the standard weld power cable and the device's sense lead is attached to the work piece, the CrossLinc light will automatically illuminate on both the machine and the device. No additional pairing of the machine to the device is needed. This light indicates the CrossLinc connection is active and that control of the voltage and current can be made at the device.

4. **OUTPUT CONTROL -** The OUTPUT CONTROL knob is used to preset the output voltage or current as displayed on the digital meters for the five welding modes.

5. **WELD TERMINALS ON SWITCH -** Output is enabled when in the ON position. Output is remotely controlled when in the REMOTE position. This control is not active in ArcLink® modes.

6. **ARC CONTROL -** The ARC CONTROL knob is active in the CC-STICK, DOWNHILL PIPE, and CV-WIRE modes, and has different functions in these modes. This control is not active in the TOUCH START TIG, ARC GOUGING, or ArcLink modes.

CC-STICK mode: In this mode, the ARC CONTROL knob sets the short circuit current (arc force) during stick welding. Increasing the number from -10 (Soft) to +10 (Crisp) increases the short circuit current and prevents sticking of the electrode to the plate while welding.

This can also increase spatter. It is recommended that the ARC CONTROL be set to the minimum number without electrode sticking. Start with a setting at 0.

DOWNHILL PIPE mode: In this mode, the ARC CONTROL knob sets the short circuit current (arc force) during stick welding to adjust for a soft or a more forceful digging arc (Crisp).

Increasing the number from -10 (Soft) to +10 (Crisp) increases the short circuit current which results in a more forceful digging arc. Typically a forceful digging arc is preferred for root and hot passes. A softer arc is preferred for fill and cap passes where weld puddle control and deposition ("stacking" of iron) are key to fast travel speeds. It is recommended that the ARC CONTROL be set initially at 0.

CV-WIRE mode: In this mode, the ARC CONTROL knob changes the inductance ("pinch") of the current. By adjusting the pinch, the the rate of current rise will change when the electrode short circuits to the work.

Increasing the pinch from -10 to +10 may reduce spatter, while decreasing the pinch will make the puddle more fluid, resulting in a flatter and smoother weld bead.

7. **WELD MODE SELECTOR SWITCH**

Provides six selectable welding modes:

CV-WIRE

DOWNHILL PIPE

CC-STICK

TOUCH START TIG

ARC GOUGING

ARCLINK

8. **42V / 120V WIRE FEEDER VOLTAGE SWITCH** Toggles output of 14-pin connector to voltage requirement of wire feeder. (Located above 14-pin connector.)

9. **5-PIN CONNECTOR** - For attaching an ArcLink® wire feeder control cable.

10. **RUN / STOP / IDLE SWITCH -** Toggling the switch to the RUN position energizes the fuel solenoid for approximately 30 seconds. The engine must be started within that time or the fuel solenoid will degenerize, and the switch must be toggled to reset the timer.

Has two positions as follows:

1) In the "HIGH IDLE" position, the engine runs at the high idle speed controlled by the governor.

2) In the "AUTO IDLE" / position, the idler operates as follows:

- When switched from "High" to "Auto" or after starting the engine, the engine will operate at full speed for approximately 12 seconds and then go to low idle speed.
- When the electrode touches the work or power is drawn for lights or tools (approximately 100 watts minimum) the engine accelerates and operates at full speed.
- When welding ceases and the auxiliary power load is turned off, a fixed time delay of approximately 12 seconds starts.
- If the welding or auxiliary power load is not restarted before the end of the time delay, the idler reduces the engine speed to low idle speed.
- The engine will automatically return to high idle speed when the welding load or auxiliary power load is reapplied.

Idler Operational Exceptions - When the WELDING TERMINALS switch is in the REMOTELY CONTROLLED position or the MODE SELECTION switch is in the ArcLink® position the idler will operate as follows:

- When the triggering device (amptrol, arc start switch, etc.) is pressed, the engine will accelerate and operate at full speed, provided a welding load is applied within approximately 12 seconds.
- If the triggering device remains pressed but no welding load is applied within approximately 12 seconds, the engine may return to low idle speed.
- If the triggering device is released or welding ceases, the engine will return to low idle speed after approximately 12 seconds.

11. START / GLOW PLUG SWITCH - Energizes the starter motor to crank the engine. With the engine RUN /STOP / IDLE switch in the "RUN" position, push and release the START button to start the engine:

- This switch has an amber light (top of switch) to indicate glow light, this engine will automatically apply power to the glow circuit and indicator light will turn off when glow is completed. (Engine will crank but will not start until glow cycle is completed)
- This switch also has a red light (bottom of switch) it will light up when there are faults with the engine. (Check engine light comes on) Field Service Shop will need to connect to diagnostic plug to read error codes.

12. 12-PIN CONNECTOR - For attaching optional remote control equipment. The K2909-1 (12-pin to 6-pin) adapter cable is included for attaching to accessories requiring the 6-pin connector.

13. 14-PIN CONNECTOR
cables. Includes contactor closure circuit, work sense lead remote control circuit, and 120V and 42V power.

14. WELD OUTPUT TERMINALS - These 1/2" - 13 studs with flange nuts provide welding connection points for the electrode and work cables. For positive polarity welding the electrode cable connects to the "+" positive terminal and the work cable connects to this "-" negative terminal. For nega-tive polarity welding the work cable connects to the "+" posi-tive terminal and the electrode cable connects to this "-" neg-ative terminal.

15. VRD (VOLTAGE REDUCTION DEVICE) INDICATOR LIGHTS - On the front panel of the Air Vantage® 600X PLUS are two indicator lights. A red light when lit indicates OCV (Open Circuit Voltage) is equal to or greater than 30V and a green light when lit indicates OCV is less than 30V. The VRD must be active for the lights to be enabled. When the machine is first started with VRD enabled, both lights will illuminate for 5 seconds.
These lights monitor the OCV and weld voltage at all times. When not welding the green light will illuminate indicating that the VRD has reduced the OCV to less than 30V. During welding the red light will illuminate whenever the arc voltage is equal to or greater than 30V. This means that the red and green light may alternate depending on the weld voltage. This is normal operation.
If the red light remains illuminated or both VRD lights flash when not welding, the VRD is not functioning properly. Please refer to your local field service shop for service.
If VRD is turned ON, but no lights are illuminated, refer to the trouble shooting section.
NOTE: See page A-2 to change the on/off position of the VRD switch.

16. HIDDEN MENU BUTTON - The hidden setup menu can be accessed any time the machine is on with the engine running and not in a welding arc (arc off or OCV). To access, press the HIDDEN MENU push button (Figure B.3 - functions are listed in following section) with the appropriate tool provided with the machine.

17. LOCAL/REMOTE SWITCH - In the LOCAL position, machine output control is set by the OUTPUT CONTROL knob on the front of the machine. In the REMOTE position, the machine output control is set by the remote inputs. This control is not active in ArcLink® modes.

18. WIRE FEEDER VOLTMETER POLARITY SWITCH
Matches the polarity of the wire feeder voltmeter to the polarity of the electrode.

19. 10A BREAKER FOR 40V ARCLINK CIRCUIT

20. 20A BREAKER FOR 120V WIRE FEEDER

21. 20A BREAKER FOR 42V WIRE FEEDER

22. 32A BREAKER FOR 415 VAC RECEPTACLE

23. 20A BREAKER FOR BATTERY

24. 15A BREAKER FOR 240 VAC RECEPTACLE

25. RESIDUAL CURRENT DEVICE (RCD)
Protects the two 240 VAC and 415 VAC auxiliary power receptacles. The device protects against electric shock if a current leakage
is detected. The RCD is rated for 40 amps and it has a 30 milliamp tripping current.

26. 240 VAC SINGLE PHASE RECEPTACLE - This is a 240 VAC (AU 56SO315A) receptacle that provides 240 VAC single phase auxiliary power. This receptacle has a 15 amp rating.

26A. 415 VAC Three Phase Receptacle- This is a 415 VAC (AU 56SO532 32A) receptacle that provides 415 VAC three phase auxiliary power. This receptacle has a 32A rating.

27. EMERGENCY ENGINE STOP - Push button stop to shutdown engine operation.

28. GROUND STUD - Provides a connection point for connecting the machine case to earth ground. Refer to MACHINE GROUNDING in the INSTALLATION section for proper machine grounding information.

29. LED STATUS LIGHT - The status LED indicates system status. Normal operation is a steady green light. (See Table B.1)

NOTE: During normal power-up, the LED may flash red and/or green as the equipment performs self tests.

TABLE B.1

LED CONDITION	DEFINITION
Steady Green	System is communicating normally.
Blinking Green	Occurs during a reset and indicates the power source is identifying each component in the system. This is normal for up to 15 seconds after power-up, or if the system configuration is changed during operation.
Fast Blinking Green	Indicates that one or more pieces of ArcLink equipment are not mapping properly.
Combination of Blinking Green and Red	Non-recoverable system fault. If the power source or wire feeder status LED is flashing any combination of red and green, errors are present in the system. Read the error code before the machine is turned off. Instructions for reading the error code are detailed in the Service Manual. Individual code digits are flashed in red with a long pause between digits. If more than one code is present, the codes will be separated by a green light. To clear the error, turn the power source OFF, and then back ON to reset.

30. THERMAL LIGHT - This status light indicates when the power source has been driven into thermal overload. If the output terminals were ON, the output will be turned back on once the unit cools down to an acceptable temperature level. If the unit was operating in the REMOTE mode, the trigger will need to be opened before or after the thermal has cleared and closed after the machine has cooled down to an acceptable temperature to reestablish output.

31. DIAGNOSTIC PLUG - This is used by field service shops to connect and troubleshoot engine error codes, found on the firewall inside the machine. (Figure B.4)

FIGURE B.4

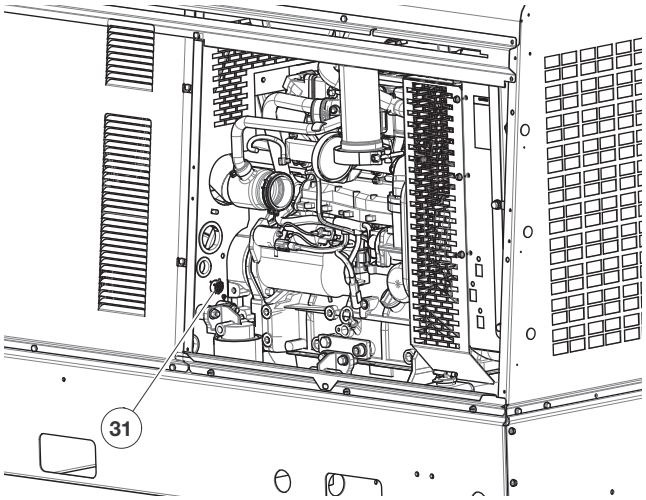

FIGURE B.5 - LOCATION OF ITEMS 32 - 35

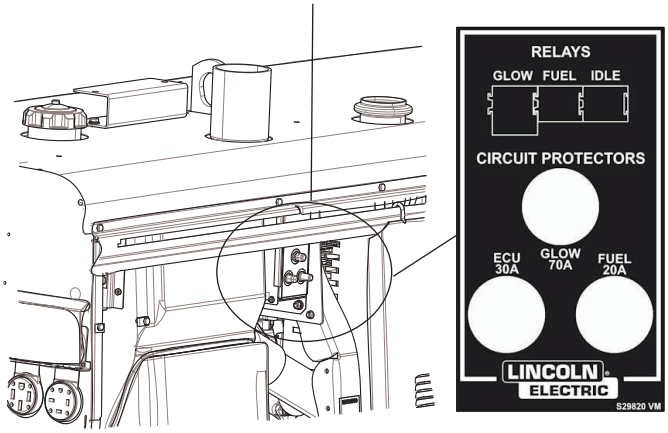

ITEMS 32 - 35 ARE LOCATED BEHIND THE RIGHT FRONT SHEET METAL PANEL - FIGURE B.5

32. GLOW RELAY / BREAKER (70A)

33. FUEL RELAY / BREAKER (20A)

34. IDLE RELAY

35. ECU (ELECTRONIC CONTROL UNIT) BREAKER (30A)

36. NEGATIVE BATTERY JUMP START TERMINAL.

37. POSITIVE BATTERY JUMP START TERMINAL.

12V battery jump start feature is standard. Covered output studs for convenient access, and protection against accidental impact. These terminals can be used to jump-start a utility truck with up to 800 cold cranking amps.

38. AIR COMPRESSOR SWITCH AND GAUGES

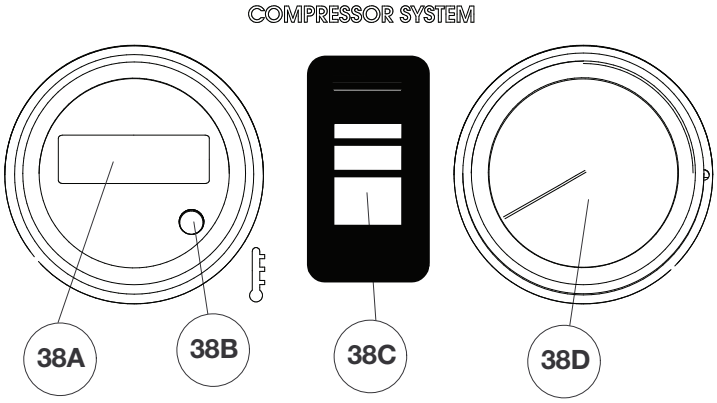

38A. HOUR METER

38B. AMBER FAULT LIGHT

38C. COMPRESSOR POWER SWITCH

38D. COMPRESSOR PRESSURE GAUGE

39. AIR COMPRESSOR OUTLET

40. BATTERY ISOLATOR

When rotated clockwise, battery power is supplied to the front panel to start & run machine. When rotated counter clockwise, power is cut-off from the front panel and is lockable (lock not included).

NOTE: It is also possible to lock service door at the bottom (Lock is not included).

41. 50Hz / 60Hz OUTPUT MODE SWITCH-

When in the 50Hz AUXILIARY OUTPUT position, auxiliary power is available with derated weld output. When in FULL WELD OUTPUT position, full weld output is available with no auxiliary power.

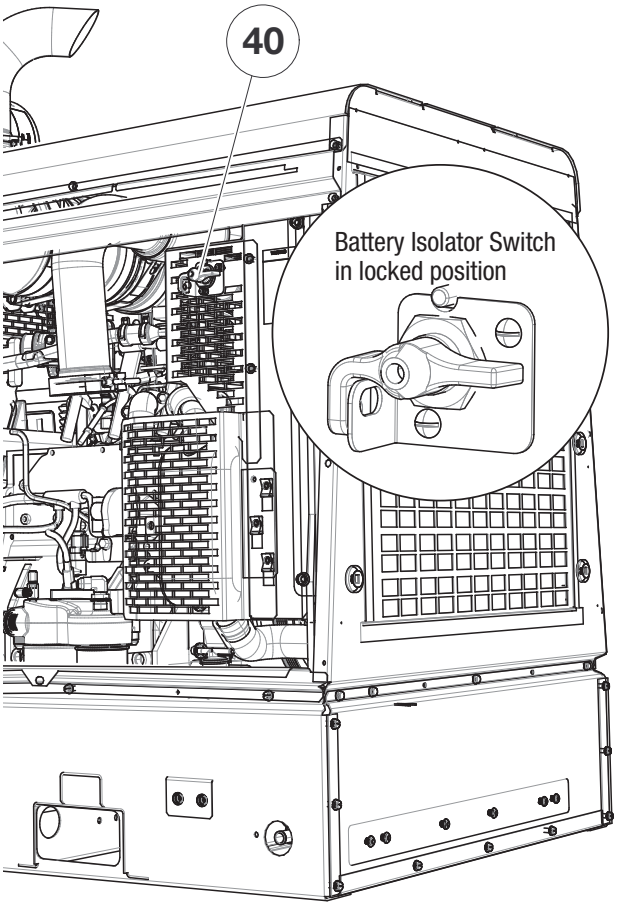

ACTIVATING THE COMPRESSOR SYSTEM

(See Figure B.6 and B.7)

1. The compressor can be activated in low or high idle.
2. Close the ball valve, Item 39, as shown in the Figure B.6.

FIGURE B.6

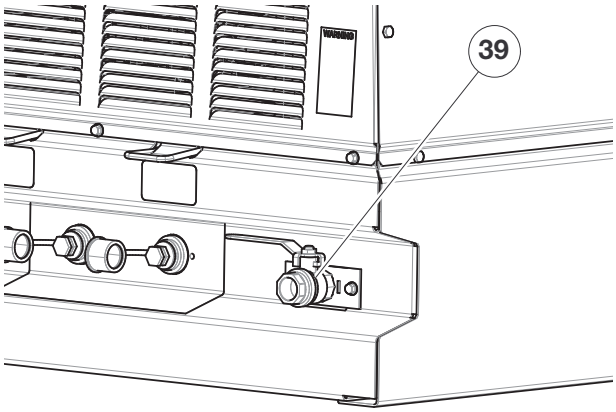

3. Press the power switch, Item 38C, to the compressor ON position which is on the right as shown in figure B.7.
4. Watch the pressure gage, Item 38D, for an increase in pressure to approximately 150-160 psi, depending on the idle speed selected.
5. The hour meter, Item 38A, will activate and show the total hours on the compressor system.
6. The amber fault light, Item 38B, should not be illuminated when the system is functioning normally.
   - If the compressor system does not come on and/or the fault light is illuminated, turn off the compressor power switch, then turn off the machine (RUN/STOP to OFF) and go to the “TROUBLE SHOOTING” section to locate the cause of the problem.
7. The compressor system is ready to use after warming up for about one minute.
8. Connect up to the ball valve (3/4 NPT) and open fully to use the system air

DEACTIVATING THE COMPRESSOR SYSTEM

1. Close the ball valve, Item 39, as shown in the Figure B.6.
2. Press the power switch, Item 38C, to the “OFF” position, which is in the middle, see figure B.7.
3. Watch the pressure gage, Item 38D, for a decrease in pressure to approximately to 0 psi. This should take place in one minute or less.

FIGURE B.7

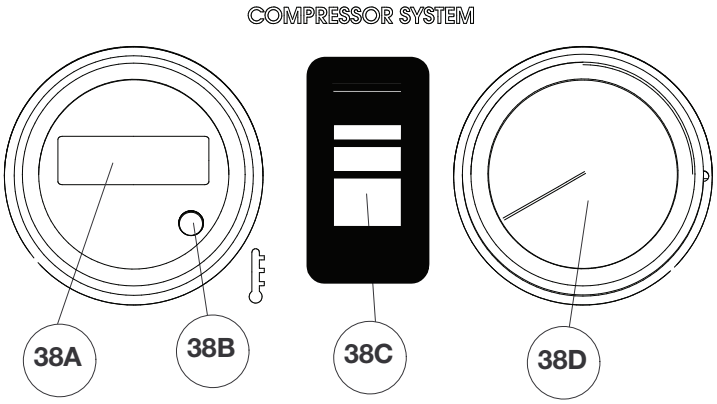

CONTROL AND INDICATOR FUNCTIONALITY

(Numbers reference the preceding figures)

1. The ball valve **Item 39** controls the flow of air out of the system. The valve is fully closed when the handle is pointing to the left side of the machine (as shown in figure B.6). The valve is fully open when the handle is pointing away from the control panel.
   - Always turn the valve to the fully closed position before starting and stopping the system.
2. When the compressor system is running, the total hours on the system is displayed on the hour meter **Item 38A**. This is and the time interval used for servicing the system oil and filters drive belt.
3. The amber fault light **Item 38B** on the lower right is normally off when the compressor system is functioning normally. If the light is illuminated it indicates a system malfunction and the system will automatically turn itself off by disengaging the magnetic clutch. The pressure gage should be reading **0** psi in this condition.
   - **NOTE:** It is acceptable to continue to use the machine for welding and auxiliary power without causing any further damage to the compressor system until it can be serviced.
4. The ON / OFF switch **Item 38C** controls power to the electro-mechanical clutch which mechanically couples and decouples the compressor to the engine. When the switch is pushed to the ON position, 12 volts DC is applied to the clutch, enabling the compressor to be driven by the engine. When the switch is pushed to the OFF position, the 12 volts DC is cut from the circuit thereby disengaging the clutch and stopping compressor rotation.
5. The air pressure gage **Item 38D** indicates that the system is on and functioning and reads the pressure at the filter manifold. The pressure at a tool attached to the system will be lower depending on the hose length and restrictions (lubricators, filters, regulators, tees, etc.) placed between the ball valve and the tool.

CONTROL SAFEGUARDS TO IMPROVE RELIABILITY

ON/OFF clutch safeguard

- If the system is on and running and the power switch is pushed to “OFF” and then back “ON” before the system pressure reaches 2 psi, the following system behavior will be observed which is designed to prevent excessive wear or failure of the clutch:
- The amber fault light will be illuminated.
- The compressor clutch will not be engaged.
- The air pressure gage will show a decrease in pressure until 2 psi is reached.
- When the system reaches 2 psi a pressure switch will then allow 12V to go to the clutch reactivating the system.

Minimum pressure check valve clutch safeguard.

- A minimum pressure check valve has been installed internal to the machine just ahead of the ball valve as a safeguard against starting and stopping the compressor with the ball valve open. This check valve will help to minimize damage to the clutch when the ball valve is not closed when starting and stopping the system over the coarse of the life of the machine. To ensure long term reliability the ball valve must be closed before starting and stopping the compressor. For informative purposes, this check valve has a cracking pressure of 60 psi.

(FOR MORE DETAILS ON THE COMPRESSOR SYSTEM AND TROUBLESHOOTING CONSULT THE APPROPRIATE VMAC OWNERS MANUAL)

HIDDEN MENU BUTTON - The hidden setup menu can be accessed any time the machine is on with the engine running and not in a welding arc (arc off or OCV). To access, press the HIDDEN MENU push button (Figure B.3 - functions are listed in following section) with the appropriate tool provided with the machine.

NOTE: The menu system will exit automatically if any of the following conditions are met:

- If no settings are changed for 10 seconds.
- If the mode selection switch position is changed.
- If the arc status changes to arc or short.
- If the entire setup menu sequence is cycled through.

FIGURE B.3

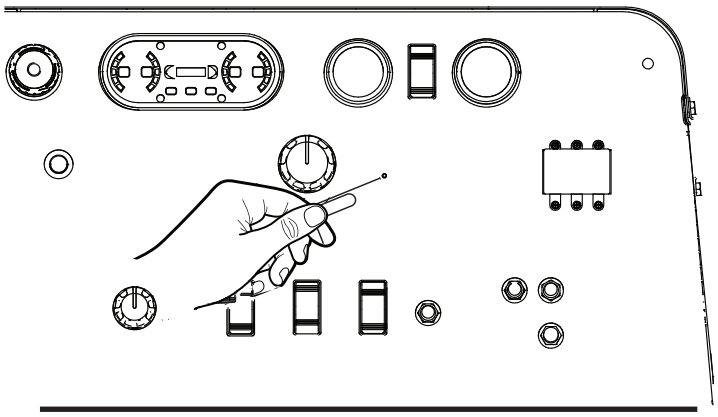

HIDDEN SETUP MENU FUNCTIONS

HOT START CONTROL

Hot start can be set based off weld mode. Non-applicable weld modes will not display hot start.

The left display will show “Hot” and “Strt” alternately at 0.5 second intervals. The right display will show a number from 0.0 to 10.0. The default value will be 5, (Figure B.8). This setting will be stored in system memory and will be remembered between machine power cycles.

FIGURE B.8

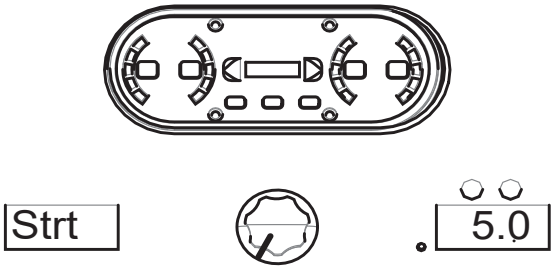

CV MODE SELECTION

Default CV mode will be non-synergic FCAW-SS (mode 6). Alternate settings will be non-synergic GMAW (mode 5) and non-synergic FCAW-GS (mode 7). The left display will show “CV” and “type” alternately at 0.5 second intervals. The right display will show “FC.SS”(Figure B.9), “FC.gS”(Figure B.10) or “MIG”(Figure B.11). This setting will be stored in system memory and will be remembered between machine power cycles. This setting will only be visible if the process selection switch is in the CV Wire position.

FIGURE B.9

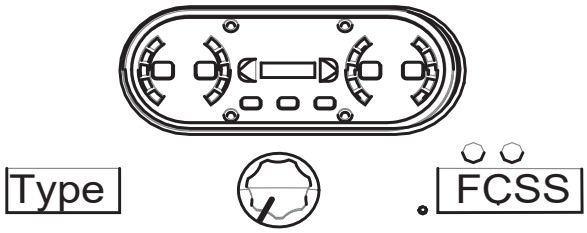

FIGURE B.10

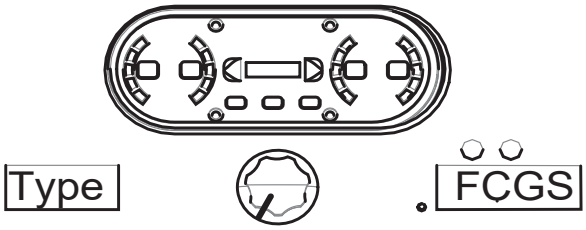

FIGURE B.11

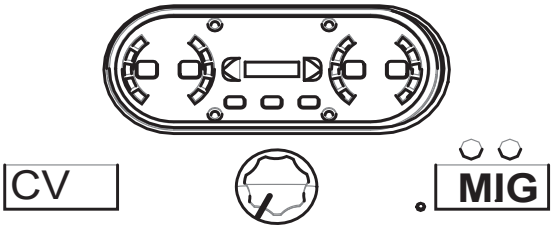

REMOTE CONNECTOR SELECTION FOR STICK AND DOWNHILL PIPE MODES.

Select between the 12-pin or 14-pin connector for remote potentiometer input for STICK or DOWNHILL PIPE modes when in the REMOTE position. The default from the factory will be the 12-pin connector. The left display will show “Pot” and the right display will show “12P” (Figure B.12) or “14P” (Figure B.13) based off selection. This setting is stored in system memory and will be remembered between machine power cycles. This selection will only be visible for STICK and DOWNHILL PIPE modes.

FIGURE B.12

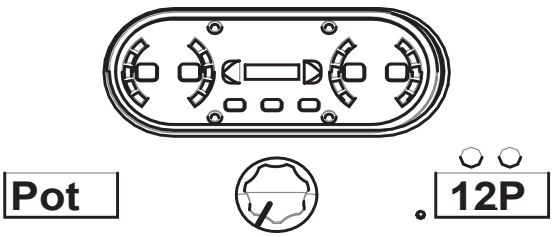

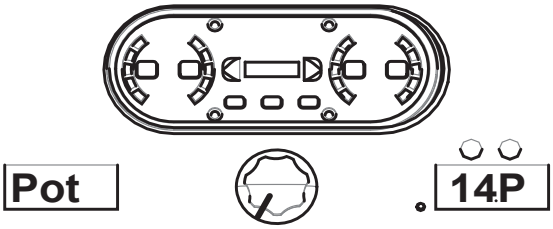

CROSSLINC IN CV MODES

CrossLinc can be enabled for CV modes (VRD will be off in CV modes).

The left display will show "**CUC**" and the right display will show "**On**" when enabled (Figure B.14) or "**OFF**" when not enabled (Figure B.15). This setting will be stored in system memory and will be remembered between machine power cycles.

FIGURE B.14

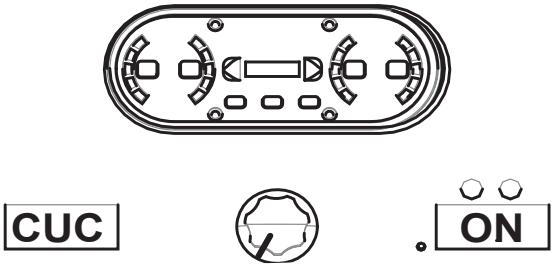

FIGURE B.15

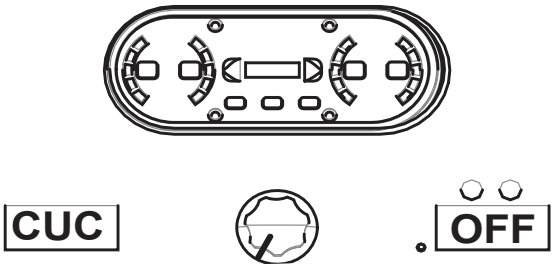

TEST MODES FOR GRID LOAD TESTING

The left display will show **"tESt"** and **"LoAd"** alternately at 0.5 second intervals. The right display will show **"CC" (mode 200)**(Figure B.16), **"CV" (mode 201)**(Figure B.17) or **"OFF" (normal operation)**(Figure B.18). This setting is not remembered between machine power cycles and will default to **OFF** at each power on. Moving the position of the weld mode selector switch will reset the setting back to **OFF**.

FIGURE B.16

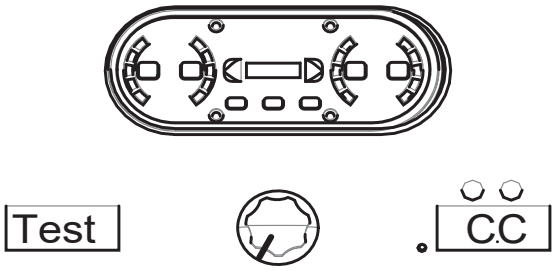

FIGURE B.17

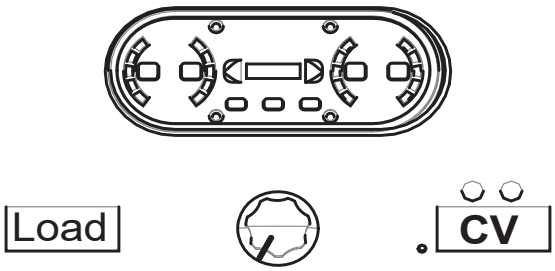

FIGURE B.18

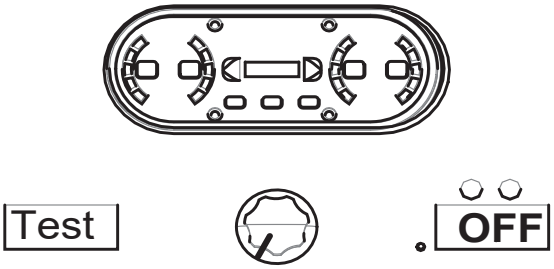

RESET BACK TO DEFAULT SETTINGS

Pressing and holding the hidden reset push button for 5 seconds will cause certain stored values to be reset to defaults. The stored hot start values will return to a default setting of 5 on the display (0 at the attribute). The work point values will all be reset to the minimum from the weld table for each respective weld mode. The alternate CV mode selection will revert back to the Flux-Cored Arc Welding-Self Shielding (FCAW-SS) setting. The remote pot connector choice will revert back to the 12-pin connector. When the reset occurs, the left display will show **" deF"**, and the right display will show **"AuLt"** for 3 seconds until the machine exits the menu system.

MAKING A WELD

SAFETY INSTRUCTIONS
Read and understand this entire section before operating your machine.

⚠ WARNING

Do not attempt to use this equipment until you have thoroughly read all operating and maintenance manuals supplied with your machine. They include important safety precautions, detailed engine starting, operating and maintenance instructions and parts lists.

ELECTRIC SHOCK can kill.

- **Do not touch electrically live parts such as output terminals or internal wiring.**
- **Insulate yourself from the work and ground.**
- **Always wear dry insulating gloves.**

ENGINE EXHAUST can kill.

- **Use in open, well ventilated areas or vent exhaust outside**
- **Do not stack anything near the engine.**

MOVING PARTS can injure.

- **Do not operate with doors open or guards off.**
- **Stop engine before servicing.**
- **Keep away from moving parts**

Only qualified personnel should operate this equipment.

⚠ WARNING

The serviceability of a product or structure utilizing the welding programs is and must be the sole responsibility of the builder/user. Many variables beyond the control of The Lincoln Electric Company affect the results obtained in applying these programs. These variables include, but are not limited to, welding procedure, plate chemistry and temperature, weldment design, fabrication methods and service requirements. The available range of a welding program may not be suitable for all applications, and the build/user is and must be solely responsible for welding program selection.

Choose the electrode material, electrode size, shielding gas, and process (GMAW, GMAW-P etc.) appropriate for the material to be welded.

Select the weld mode that best matches the desired welding process. The standard weld set shipped with the Air Vantage® 600X PLUS encompasses a wide range of common processes that will meet most needs. If a special weld mode is desired, contact your local Lincoln Electric sales representative.

All adjustments are made through the user interface. Because of the different configuration options, your system may not have all of the following adjustments.

See ACCESSORIES section for kits and options available to use with the Air Vantage® 600X PLUS, visit lincolnelectric.com, or contact your local Lincoln Electric sales representatives.

DUTY CYCLE

Duty cycle is the percentage of time the load is being applied in a 10 minute period. For example, a 60% duty cycle represents 6 minutes of load and 4 minutes of no load in a 10 minute period.

NOTE: The duty cycles for the IEC rated output and max output are listed on the front nameplate of the Air Vantage 600X PLUS.

DEFINITION OF WELDING MODES

Non-Synergic Welding Modes

- A **non-synergic welding** mode requires all welding process variables to be set by the operator.

Synergic Welding Modes

- A **synergic welding** mode offers the simplicity of single knob control. The machine will select the correct voltage and amperage based on the Wire Feed Speed (WFS) set by the operator.

BASIC WELDING CONTROLS

50Hz / 60Hz MODE SWITCH - Place in "FULL WELD OUTPUT" for full weld output or "50Hz AUXILIARY OUTPUT for derated weld output.

Weld Mode

Selecting a weld mode determines the output characteristics of the Air Vantage® 600X PLUS power source. Weld modes are developed with a specific electrode material, electrode size, and shielding gas. Refer to the WELDER OPERATION section for a more completed description of the weld modes programmed into the machine at the factory.

Wire Feed Speed (WFS)

In synergic welding modes (synergic CV, GMAW-P), WFS is the dominant control parameter. The user adjusts WFS according to factors such as wire size, penetration requirements, heat input, etc. The Air Vantage® 600X PLUS then uses the WFS setting to adjust the voltage and current according to settings contained in the Air Vantage® 600X PLUS.

In non-synergic modes, the WFS control behaves like a conventional power source where WFS and voltage are independent adjustments. Therefore, to maintain proper arc characteristics, the operator must adjust the voltage to compensate for any changes made to the WFS.

Amps

In constant current modes, the OUTPUT CONTROL knob adjusts the welding amperage.

Volts

In constant voltage modes, the OUTPUT CONTROL knob adjusts the welding voltage.

WELDER OPERATION

CC-STICK MODE

The Air Vantage® 600X PLUS can be used with a broad range of DC stick electrodes.

The CC-STICK position of the MODE switch is designed for horizontal, vertical-up and over head welding with all types of stick electrodes, especially low hydrogen. The OUTPUT CONTROL knob adjusts the full output range for stick welding.

The ARC CONTROL knob sets the short circuit (arc force) current during stick welding. Increasing the number from -10 (Soft) to +10 (Crisp) increases the short circuit current and prevents sticking of the electrode to the plate while welding. This can also increase spatter. It is recommended that the ARC CONTROL be set to the minimum number without electrode sticking. Start with the knob set at 0.

DOWNHILL PIPE MODE

This slope controlled setting is intended for “out-of-position” and “down hill” pipe welding where the operator would like to control the current level by changing the arc length. The OUTPUT CONTROL knob adjusts the full output range for pipe welding.

The ARC CONTROL knob sets the short circuit current (arc force) during stick welding to adjust for a soft or a more forceful digging arc (Crisp). Increasing the number from -10 (Soft) to +10 (Crisp) increases the short circuit current which results in a more forceful digging arc. Typically a forceful digging arc is preferred for root and hot passes. A softer arc is preferred for fill and cap passes where weld puddle control and deposition (“stacking” of iron) are key to fast travel speeds. It is recommended that the ARC CONTROL be set initially at 0.

TOUCH START TIG MODE

The Air Vantage® 600X PLUS can be used in a wide variety of DC TIG welding applications.

The TOUCH START TIG setting of the MODE switch is for DC TIG welding. To initiate a weld, the OUPUT CONTROL knob is first set to the desired current and the tungsten is touched to the work. During the time the tungsten is touching the work, there is very little voltage or current and, in general, this avoids tungsten contamination. Then, the tungsten is gently lifted off the work in a rocking motion, which establishes the arc.

To stop the arc, simply lift the TIG torch away from the work piece. When the arc voltage reaches approximately 30 volts, the arc will go out and the machine will automatically reset to the touch start current level. The tungsten may then be retouched to the work piece to restrike the arc. The arc may also be started and stopped with an amptrol or arc start switch.

NOTE: While using TOUCH START TIG mode, it is important to use the proper welding cable size to ensure expected performance levels.

The ARC CONTROL is not active in the TIG mode.

HIGH FREQUENCY TIG OPTIONS

In general the ‘Touch Start’ feature avoids tungsten contamination without the use of a high frequency unit. If the use of a high frequency generator is desired, the K930-2 TIG Module can be used with the Air Vantage® 600X PLUS.

The Air Vantage® 600X PLUS is equipped with the required radio frequency bypass circuitry for the connection of high frequency generating equipment.

The Air Vantage® 600X PLUS and any high frequency generating equipment must be properly grounded. See the K930-2 TIG Module operating manuals for complete instructions on installation, operation, and maintenance.

When using the TIG Module, the OUTPUT CONTROL knob on the Air Vantage® 600X PLUS is used to set the maximum range of the CURRENT CONTROL on the TIG Module amptrol.

For high frequency AC TIG, utilize the auxiliary output to power a Square Wave TIG 200.

SETTINGS WHEN USING THE K930-2 TIG MODULE

- Set the WELD MODE switch to the TOUCH START TIG setting.
- Set the RUN / STOP / IDLE switch to the AUTO IDLE / RUN position.
- Set the WELDING TERMINALS switch to the REMOTELY CONTROLLED position. This will keep the solid state contactor open and provide a “cold” electrode until the triggering device (amptrol or arc start switch) is pressed.

Table B.2 TYPICAL CURRENT RANGES (1) FOR TUNGSTEN ELECTRODES (2)

Tungsten Electrode Diameter mm (in)	DCEN (-)	DCEP (+)	Approximate Argon Gas Flow Rate L/min (cfm)		TIG TORCH Nozzle Size (4) (5)
	1%, 2% Thoriated Tungsten	1%, 2% Thoriated Tungsten	Aluminum	Stainless Steel	
.25 (0.010)	2-15	(3)	2-4 (3-8)	2-4 (3-8)	#4, #5, #6
.50 (0.020)	5-20	(3)	3-5 (5-10)	3-5 (5-10)	
1.0 (0.040)	15-80	(3)	3-5 (5-10)	3-5 (5-10)	
1.6 (1/16)	70-150	10-20	3-5 (5-10)	4-6 (9-13)	#5, #6
2.4 (3/32)	150-250	15-30	6-8 (13-17)	5-7 (11-15)	#6, #7, #8
3.2 (1/8)	250-400	25-40	7-11 (15-23)	5-7 (11-15)	
4.0 (5/32)	400-500	40-55	10-12 (21-25)	6-8 (13-17)	#8, #10
4.8 (3/16)	500-750	55-80	11-13 (23-27)	8-10 (18-22)	
6.4 (1/4)	750-1000	80-125	13-15 (28-32)	11-13 (23-27)	

(1) When used with argon gas. The current ranges shown must be reduced when using argon/helium or pure helium shielding gases.

(2) Tungsten electrodes are classified as follows by the American Welding Society (AWS):

Pure	EWP
1% Thoriated	EWTh-1
2% Thoriated	EWTh-2

Though not yet recognized by the AWS, Ceriated Tungsten is now widely accepted as a substitute for 2% Thoriated Tungsten in AC and DC applications.

(3) DCEP is not commonly used in these sizes.

(4) TIG torch nozzle “sizes” are in multiples of 1/16ths of an inch:

# 4 =	1/4 in.	6 mm
# 5 =	5/16 in.	8 mm
# 6 =	3/8 in.	10 mm
# 7 =	7/16 in.	11 mm
# 8 =	1/2 in.	12.5 mm
#10 =	5/8 in.	16 mm

(5) TIG torch nozzles are typically made from alumina ceramic. Special applications may require lava nozzles, which are less prone to breakage, but cannot withstand high temperatures and high duty cycles.

CV-WIRE MODE

Connect a wire feeder to the Air Vantage® 600X PLUS and set welder controls according to the instructions listed earlier in this section.

The Air Vantage® 600X PLUS in the CV-WIRE position, permits it to be used with a broad range of flux cored wire (Innershield®) and Outershield®) electrodes and solid wires for GMAW (MIG) welding. Welding can be fineliy tuned using the ARC CONTROL.

Turning the ARC CONTROL clockwise from -10 (soft) to +10 (crisp) changes the arc from soft and washed-in to crisp and narrow. It acts as an inductance/pinch control. The proper setting depends on the procedure and operator preference. Start with the knob set at 0.

For any electrodes, including the above recommendations, the procedures should be kept within the rating of the machine. For additional electrode information, see www.lincolnelectric.com or the appropriate Lincoln publication.

Synergic CV

For each wire feed speed, a corresponding voltage is preprogrammed into the machine through special software at the factory.

The nominal preprogrammed voltage is the best average voltage for a given wire feed speed, but may be adjusted to preference. When the wire feed speed changes, the Air Vantage® 600X PLUS automatically adjusts the voltage level correspondingly to maintain similar arc characteristics throughout the WFS range. See Table B.4 for the available synergy modes accessible via ARCLINK mode.

Non-Synergic CV

In non-synergic modes, the WFS control behaves more like a conventional CV power source where WFS and voltage are independent adjustments. Therefore to maintain the arc characteristics, the operator must adjust the voltage to compensate for any changes made to the WFS.

ARC GOUGING MODE

For optimal performance when arc gouging, set the Air Vantage® 600X PLUS WELD MODE SELECTOR knob to the ARC GOUGING position.

Set the OUTPUT CONTROL knob to adjust output current to the desired level for the gouging electrode being used according to the ratings in Table B.3 below.

If gouging above 450 amps, it is recommended to set the machine to HIGH IDLE.

*Maximum current setting is limited to the Air Vantage® 600X PLUS maximum of 600 amps.

TABLE B.3

ELECTRODE DIAMETER	CURRENT RANGE DCEP (+)
1/8" (3.2 mm)	30-60 Amps
5/32" (4.0 mm)	90-150 Amps
3/16" (4.8 mm)	200-250 Amps
1/4" (6.4 mm)	300-400 Amps
5/16" (7.9 mm)	350-450 Amps
3/8" (9.5 mm)	450-600 Amps

NOTE: If desired the CV-WIRE mode can be used for arc gouging applications.

ARCLINK MODE

This weld mode is intended to unlock basic non-synergic and synergic modes intended for use with compatible ArcLink wire feeders. All of the Air Vantage® 600X PLUS user interface controls are disabled in this mode and controlling the power source is accomplished from the wire feeder user interface.

Hot Start – Not used for this welding process.

Arc Control – Not used for this welding process.

Weld Terminals On/Remote – Not used for this welding process.

Amperage Display – This display will display three dashed lines when the machine is in the idle state. This indicates that amperage is not settable in this weld mode. While output is enabled, the actual welding amperage will be displayed. After welding, the meter holds the actual amperage value for 5 seconds. Output adjustment while in the "hold" period results in the "prior to operation" characteristics stated above. The displays blink indicating that the machine is in the "Hold" period.

Voltage Display – This display will display the pre-set welding voltage when the machine is in the idle state. After welding, the meter holds the actual voltage value for 5 seconds. Output adjustment while in the "hold" period results in the "prior to operation" characteristics stated above. The displays blink indicating that the machine is in the "Hold" period.

Output Control Local/Remote – Not used for this welding process

Output Control – Not used for this welding process

PULSE WELDING

Pulse welding procedures are set by controlling an overall “arc length” variable. When pulse welding, the arc voltage is highly dependent upon the waveform. The peak current, back ground current, rise time, fall time and pulse frequency all affect the voltage. The exact voltage for a given wire feed speed can only be predicted when all the pulsing waveform parameters are known. Voltage or Trim can be adjusted.

Trim adjusts the arc length and ranges from 0.50 to 1.50 with a nominal value of 1.00. Trim values greater than 1.00 increase the arc length, while values less than 1.00 decrease the arc length. 1.00 is a good starting point for most conditions. (See Figure B.19)

FIGURE B.19

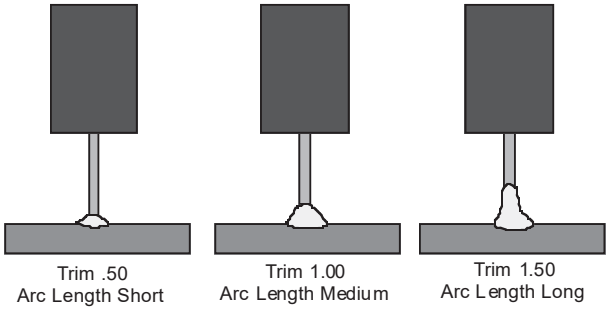

Most pulse welding programs are synergic. As the wire feed speed is adjusted, the Air Vantage® 600X PLUS will automatically recalculate the waveform parameters to maintain similar arc properties.

The Air Vantage® 600X PLUS utilizes “adaptive control” to compensate for changes in the electrical stick-out while welding (Electrical stick-out is the distance from the contact tip to the work piece). The Air Vantage® 600X PLUS waveforms are optimized for a 0.75” stick-out. The adaptive behavior supports a range of stick-outs from 0.50 to 1.25”. At very low or high wire feed speeds, the adaptive range may be less due to reaching physical limitations of the welding process.

UltimArc™ Control

UltimArc™ Control adjusts the focus or shape of the arc. UltimArc™ Control is adjustable from -10.0 to +10.0 with a nominal setting of 0.0. Increasing the UltimArc™ Control increases the pulse frequency and background current while decreasing the peak current. This results in a tight, stiff arc used for high speed sheet metal welding. Decreasing the UltimArc™ Control decreases the pulse frequency and background current while increasing the peak current. This results in a soft arc good for out of position welding. (See Figure B.20)

FIGURE B.20

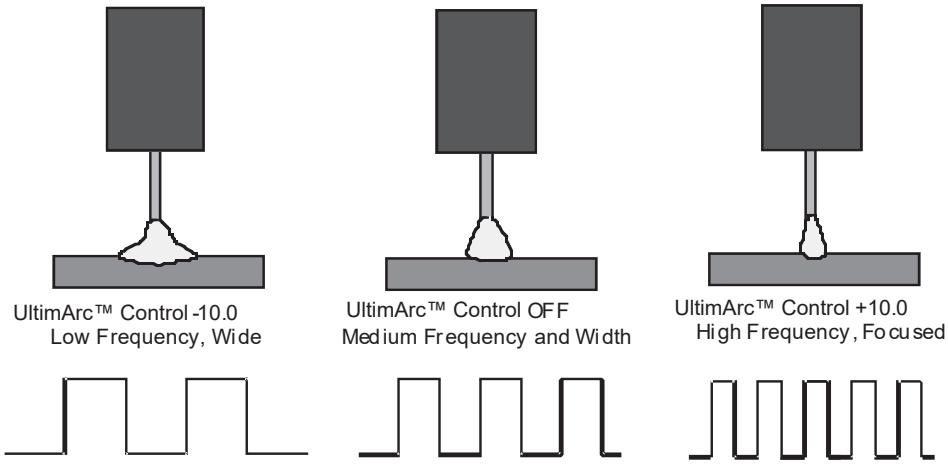

TABLE B.4

The following modes can be accessed via an ArcLink feeder:

Synergic CV Modes									
Diameter	Steel		Stainless		Metal-Cored	Flux Core		Aluminum	
	CO 2	Argon Mix	Argon Mix	Tri-Mix	Argon Mix	Argon Mix	CO2	4043	5356
.030	•	•	•	•					
.035	•	•	•	•				•	•
.040	•	•							
.045	•	•	•	•	•	•	•		
3/64								•	•
.052	•	•			•	•	•		
1/16		•	•		•	•	•	•	•

Pulse Modes					
Diameter	Steel	Stainless	Metal-Cored	Aluminum	
	Argon Mix	Argon Mix	Argon Mix	4043	5356
.035	•	•		•	•
.040	•				
.045	•	•	•		
3/64				•	•
.052	•		•		
1/16	•	•	•	•	•

CROSSLINC

CrossLinc provides the benefits of remote control without a cable. The accessory or wire feeder talks to the power source by sending a signal through the electrode cable.

To start CrossLinc, simply connect the weld cables and sense lead per the CrossLinc device's instructions. Select the desired weld mode with the machine. When weld output is ON, the CrossLinc device will automatically link to the machine. The CrossLinc light will be on to show active communication.

When CrossLinc is active, the remote control is disabled.

CrossLinc technology uses a communication protocol coupled in the electrode and work cables. For best performance the total voltage drop in the system should be kept under 10V.

CrossLinc is not compatible with High Frequency TIG. If high frequency is in the area, the cables need to routed as far as possible from each other. Also, follow all high frequency best practices, including an driven earth ground.

PARALLELING

When paralleling machines in order to combine their outputs, all units must be operated in the CC-STICK mode at the same output settings. To achieve this, turn the WELD MODE switch to the CC-STICK position. Operation in other modes may produce erratic outputs, and large output imbalances between the units.

AUXILIARY POWER OPERATION

Start the engine and 50Hz / 60Hz Mode Switch to "50Hz AUXILIARY POWER".

The auxiliary power of the Air Vantage® 600X PLUS consists of one 32 Amp, 415 VAC Australian 56S0532 receptacle and two 15 amp VAC Australian 56SO315A receptacles, all with RCD protection.

The auxiliary power capacity is 23,000 watts three phase or 7,200 watts of 50Hz, single phase power. The auxiliary power capacity rating in watts is equivalent to volt-amperes at unity power factor. The maximum permissible current of the 240 VAC output is 15 A.

NOTE: The 240V receptacles are connected to different phases and cannot be paralleled.

The auxiliary power receptacles should only be used with three wire grounded type plugs or approved double insulated tools with two wire plugs.

The current rating of any plug used with the system must be at least equal to the current capacity of the associated receptacle.

SIMULTANEOUS WELDING AND AUXILIARY POWER LOADS

The auxiliary power capacity previously stated is maintained without any welding load. If a welding load is present, the available auxiliary power will decrease.

TABLE B.5 AIR VANTAGE 600X PLUS SIMULTANEOUS WELDING AND POWER LOADS

WELD AMPS		1 PHASE WATTS	1 PHASE AMPS		3 PHASE WATTS	3 PHASE AMPS		BOTH 1 AND 3 PHASE WATTS	BOTH 1 AND 3 PHASE AMPS
0		7,200	30		20,000	32		23,000	------
100		7,200	30		18,800	25		18,000	------
200	PLUS	7,200	30	OR	15,000	21	OR	15,000	------
300		7,200	30		10,000	14		10,000	------
400		6,000	25		5,000	7		5,000	------
475		0	0		0	0		0	------

TABLE B.6 AIR VANTAGE® 600X PLUS EXTENSION CORD LENGTH RECOMMENDATIONS

Current (Amps)	Voltage (Volts)	Load (Watts)	Maximum Allowable Cord Length in ft. (m) for Conductor Size											
			14 AWG		12 AWG		10 AWG		8 AWG		6 AWG		4 AWG	
15	120	1800	30	(9)	40	(12)	75	(23)	125	(38)	175	(53)	300	(91)
15	240	3600	60	(18)	75	(23)	150	(46)	225	(69)	350	(107)	600	(183)
20	120	2400			30	(9)	50	(15)	88	(27)	138	(42)	225	(69)
20	240	4800			60	(18)	100	(30)	175	(53)	275	(84)	450	(137)
25	240	6000					90	(27)	150	(46)	225	(69)	250	(76)
30	240	7200					75	(23)	120	(37)	175	(53)	300	(91)
38	240	9000							100	(30)	150	(46)	250	(76)
50	240	12000									125	(38)	200	(61)

Conductor size is based on maximum 2.0% voltage drop.

TYPICAL FUEL CONSUMPTION

Refer to Table B.7 for typical fuel consumption of the Air Vantage® 600X PLUS Engine for various operating scenarios.

TABLE B.7
(Deutz TD2.9L4) Fuel Consumption

	GAL. / HR.	L / HR.	RUN TIME (HRS.) WITH FULL TANK*
High Idle	0.79	3.01	31.5
Low Idle	0.59	2.24	42.4
100A 24V	0.91	3.44	27.5
200A 28V	1.05	3.98	23.8
300A 32V	1.30	4.92	19.2
400A 36V	1.65	6.25	15.2
500A 40V	2.02	7.63	12.4

*Full Tank equals 25 gal. (94.6L)

ACCESSORIES

CROSSLINC ACCESSORIES

LN-25X

True Voltage Technology (TVT) is now included with the LN-25X portable wire feeder. When used with a CrossLinc compatible power source, control cables are eliminated and voltage can be controlled right at the feeder. TVT compensates for voltage drop when using long welding power cables.

Order: K4267-2

Activ8X

rugged, light-weight, portable across-the-arc wire feeder that fits up to an 8” dia. spool. Includes CrossLinc and TVT capability to remotely set voltage from the feeder without a control cable and to ensure the set voltage regardless of power cable lengths.

Order: K3519-1

CrossLinc Remote

Utilize with CrossLinc compatible equipment to control output for CC processes like stick or TIG welding. Remote control is added in-line with the welding power cable to allow for remote output control of the power source through the weld cable without additional control cables.

Order: K4345-1

GENERAL ACCESSORIES

Large Welder Trailer

Two-wheeled trailer with a standard Duo-Hitch™ (2” Ball and Lunette Eye combination hitch) for heavy-duty road, off-road, plant, and yard use. For highway use, consult applicable federal, state, and local laws regarding possible additional requirements. Optional fender and light package available.

Order: K2637-2 Large Trailer
K2639-1 Fender & Light Kit
K2640-1 Cable Rack

Four-Wheeled Steerable Trailer

Four-wheeled trailer with a standard Duo-Hitch™ (2” Ball and Lunette Eye combination hitch) for plant and yard towing. Includes 13” wheels and an automatically engaging drawbar lock.

Order: K2641-2

Polarity/Multi-Process Switch

Offers easy polarity switching and process changes for all Lincoln® Chopper Technology® engine-driven welders.

Order: K2642-1 Polarity/Multi-Process Switch

Air Filter Guard Kit

Placed around the air filter to provide additional protection from incidental damage.

Order: K4698-1

Spark Arrestor

Mounts to exhaust tube to significantly reduce spark emissions.

Order: K2864-1

Deutz® Engine Service Kit

One easy-to-purchase kit including all the needed engine filters to maintain peak welder performance. Includes air filter, fuel filter, oil filter, and fuel water separator.

Order: K3558-5

VMAC® Compressor Service Kits

One easy-to-purchase kit including all the needed components to perform routine maintenance on the air compressor.

Order: KP3406-1 6 Month / 500 Hours
KP3408-1 12 Month / 1,000 Hours

Air Filter Kit

Removes water, oil aerosols, oil vapor, and particulates from compressed air to reduce the risk of rust in tools, tip wear in plasma cutters, and frequency of tip changes. Includes mounting bracket and housing connection.

Order: K3088-1

Remote Output Control

Portable control provides same dial range as the output control on the welder. The remote features a convenient 12-pin plug for easy connection to the welder.

Order: K857-2 25 ft (7.6 m)
K857-3 100 ft (30.4 m)
K2909-1 12-pin to 6-pin Adaptor

TIG ACCESSORIES

Pro-Torch PTA-26 TIG Torch

Air-cooled 200 amp torch (2 piece) equipped with valve for gas flow control with 25 ft. (7.6 m) of cable length. Expendable parts kit available.

Order: K1783-9 PTA-26 TIG Torch
KP509 Magnum Parts Kit for PTA-26 TIG Torch

Foot Amptrol

Remote output control foot pedal for TIG welding with a 25 ft. (7.6 m) cable featuring a 12-pin connector.

Order: K870-2

Hand Amptrol

Remote output control hand control for TIG welding with a 25 ft. (7.6 m) cable featuring a 12-pin connector. Includes hook and loop straps to secure torch. (One size fits Pro-Torch TIG Torches.)

Order: K963-4

TIG Module

Supplies high frequency for superior starting, contactor control, remote control capability, and a gas valve for AC or DC TIG welding.

Order: K930-2 TIG Module
K936-1 TIG Module Cable, 9 pin to 14 pin

WIRE FEEDERS & GUNS

K126 Pro Innershield® Gun

Feature replaceable liners, interchangeable backend, long life Magnum® PRO contact tips, improved heat resistant gun tubes, and better trigger lead protection. For self-shielded .062-5/64 in. (1.6-2.0 mm) wire with 15 ft. (4.5 m) cable. Includes K466-10 Connector Kit.

Order: K126-12

Magnum SG Spool Gun

25.ft (7.6m) handheld semiautomatic wire feeder large easy-grip handle and remote control wire speed. Requires Control Module and Input Cable.

Order: K487-25 Magnum SG
K488 Magnum Control Module
K691-10 Input Cable

Power Feed 25M

Compact wire feeder offers push-pull capable for premium aluminum welding. Features the MAXTRAC® drive system, full controls, and procedural memory presets to support the advanced process welding on almost any application. Plastic and aluminum case available. ArcLink control cable needed.

Order: K2536-5 Plastic Case
K2536-4 Aluminum Case
K2683-25 Heavy Duty ArcLink Control Cable - 25 ft. (7.6 m)
K2683-50 Heavy Duty ArcLink Control Cable - 50 ft. (15.2 m)
K2683-100 Heavy Duty ArcLink Control Cable - 100 ft. (30.4 m)
K2429-1 ArcLink® "T" Connector Kit

CABLE ACCESSORIES

Tweco® Adaptors

Allows for quick cable changeovers on the jobsite.

Order: K2487-1 Stud to Tweco Female Adapter – LENCO (CT-40FS)
K2946-1 Tweco Style Cam-Lock Adapter Plug for 2/0 (50 mm^2) cable
K3416-70 Tweco Style Plug (Male, 1/0 thru 2/0)
K3416-90 Tweco Style Plug (Male, 3/0 thru 4/0)
K3417-70 Tweco Style Receptacle (Female, 1/0 thru 2/0)
K3417-90 Tweco Style Receptacle (Female, 3/0 thru 4/0)

POWER SOURCES

Square Wave TIG 200

Portable TIG and stick welding machine that provides smooth and stable AC TIG welding on aluminum and DC TIG welding on steel, stainless steel and chrome-moly.

Order: K5126-1

PowerMIG 210MP

Multi-process welder with MIG, stick, TIG, and flux-cored welding. The push-and-turn digital controls and color display screen make setup and operation intuitive and easy, while the all-metal wire drive and sturdy sheet-metal construction make it rugged and ready for any job. Runs off auxiliary power to provide an additional welding arc.

Order: K3963-1

Tomahawk 1000 Plasma Cutter

Cuts metal using the AC generator power from the engine-driven welder. Requires the T12153-10 Full-KVA Power Plug (NEMA 15-50P).

Order: K2808-1

Multi-Weld 350

Small and portable welder to provide additional welding arcs. Multiple machines can be powered off the welding power cable of one main power supply. Excellent option to provide control at the welding arc for DC+ stick or wire processes.

Order: K1735-1

Invertec V350 PRO

Efficient, lightweight, and portable multi-process welder. Runs off the auxiliary power to provide an additional welding arc.

Order: K1728-6

Invertec V275-S

Proven, portable CC power source for Stick or TIG welding. Runs off the auxiliary power to provide an additional welding arc.

Order: K2269-1

Flextec 350X PowerConnect

Reliable, multi-process welder designed for use in construction, fabrication, shipbuilding, and other heavy-duty applications. Features PowerConnect Technology to allow for automatic connecting to any incoming voltage including 200-575 VAC, single or three-phase, 50 or 60 Hz
Order: K4273-1

MAINTENANCE

SAFETY PRECAUTIONS

READ AND UNDERSTAND ENTIRE SECTION BEFORE OPERATING MACHINE.

⚠ WARNING

- **Have a qualified technician do the maintenance and troubleshooting work.**
- **Turn the engine off before working inside the machine.**
- **Remove guards only when necessary and replace them when the maintenance requiring their removal is complete.**
- **Always use the greatest care when working near moving parts.**

Read the Safety Precautions in front of this manual and the engine instruction manual before working on this machine.

Keep all equipment safety guards, covers and devices in position and in good repair. Keep hands, hair, clothing and tools away from V-belts, gears, fans and all other moving parts when starting, operating or repairing the equipment.

⚠ WARNING

HOT PARTS AND FLUID can burn or cause fire

- **Do not touch hot parts with bare hands or allow hot fluid to contact skin.**
- **Allow equipment to completely cool before servicing.**
- **Handle hot parts using proper tools and wear heavy insulated welding gloves and clothing to prevent burns.**
- **Do not place unit on, over, or near combustible surfaces.**
- **Keep all flammable material away from unit.**

⚠ WARNING

Before carrying out service, maintenance and/or repair jobs, fully disconnect power to the machine.

Use Personal Protective Equipment (PPE), including safety glasses, dust mask and gloves to avoid injury. This also applies to persons who enter the work area.

MOVING PARTS can injure.
- **Do not operate with doors open or guards off.**
- **Stop engine before servicing.**
- **Keep away from moving parts.**

Have qualified personnel do all maintenance and troubleshooting work.

ROUTINE AND PERIODIC MAINTENANCE

DAILY

- Check the engine oil level.
- Refill the fuel tank to minimize moisture condensation in the tank.
- Open the water drain valve located on the bottom of the water separator element 1 or 2 turns and allow to drain into a container suitable for diesel fuel for 2 to 3 seconds. Repeat the above drainage procedure until diesel fuel is detected in the container.
- Clean interior of machine with a low pressure air stream. Make a thorough inspection of all components.
- Look for signs of overheating, broken leads, or other obvious problems. Many problems can be uncovered with a good visiual inspection.

PERIODIC

Blow out the machine with low pressure air periodically. In particularly dirty locations, this may be required once a week.

BRUSH REMOVAL AND REPLACEMENT

It is normal for the brushes and slip rings to wear and darken slightly. Inspect the brushes when a generator overhaul is necessary.

⚠ WARNING

Do not attempt to polish slip rings while the engine is running.

⚠ WARNING

HYDRAULIC FLUID and COMPRESSED AIR can injure or kill.

- **If any hydraulic fluid or compressed air is injected into the skin or body seek medical help immediately.**
- **Check for leaks before using. Never use your hands to search for leaks. See Manual for leak detection methods.**
- **Do not use equipment if leaks are found.**
- **Only qualified technicians should install, service or repair system.**
- **Follow Lockout/Tagout procedure before working on unit.**
- **Relieve pressure before setting up, using or servicing.**
- **Wear appropriate PPE (See Manual).**
- **Never rely on air or hydraulic pressure for support. Use proper mechanical support.**
- **Never use compressed air for breathing.**
- **Keep all flammable material away from unit.**

ENGINE MAINTENANCE

Refer to the SERVICE PLAN section of the Engine Operator's Manual for the recommended maintenance schedule of the following:

a) Engine Oil and Filter

b) Air Cleaner

c) Fuel Filter and Delivery System

d) Alternator Belt

e) Battery

f) Cooling System

Refer to Table D.1 at the end of this section for various engine maintenance components.

COMPRESSOR MAINTENANCE

Refer to the ROUTINE MAINTENANCE section of the Compressor Operator's Manual for the recommended maintenance schedule of the following:

a) Air Filter

b) Compressor Oil

c) Oil Filter

d) Coalescing Filter

See the ACCESSORIES section for available service kits for the compressor.

AIR FILTER

⚠ WARNING

- **Excessive air filter restriction will resuly in reduced engine life.**
- **Never use gasoline or low flash point solvents for cleaning the air cleaner element. A fire or explosion could result.**
- **Never run the engine without the air cleaner. Rapid engine wear will result from contaminants, such as dust and dirt being drawn into the engine.**

The diesel engine is equipped with a dry type air filter. Never apply oil to it. Service the air cleaner per instructions on page D-3

Replace the air filter element as needed per the service indicator. If no indicator is present, clean as needed and replace every 200 hours of operation. Under dusty conditions, replace sooner.

Service Instructions

Single- and Two-Stage Engine Air Cleaners

1 Remove the Filter

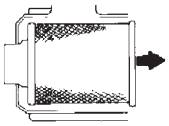

Rotate the filter while **pulling straight out.**

Unfasten or unlatch the service cover. Because the filter fits tightly over the outlet tube to create the critical seal, there will be some initial resistance, similar to breaking the seal on a jar. Gently move the end of the filter back and forth to break the seal then rotate while pulling straight out. Avoid knocking the filter against the housing.

If your air cleaner has a safety filter, replace it every third primary filter change. Remove the safety filter as you would the primary filter. Make sure you cover the air cleaner outlet tube to avoid any unfiltered contaminant dropping into the engine.

2 Clean Both Surfaces of the Outlet Tube and Check the Vacuator™ Valve

Use a clean cloth to wipe the filter sealing surface and the inside of the outlet tube. Contaminant on the sealing surface could hinder an effective seal and cause leakage. Make sure that all contaminant is removed before the new filter is inserted. Dirt accidently transferred to the inside of the outlet tube will reach the engine and cause wear. Engine manufacturers say that it takes only a few grams of dirt to "dust" an engine! Be careful not to damage the sealing area on the tube.

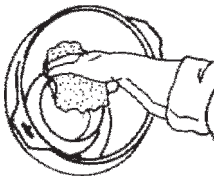

Outer edge of the outlet tube

Wipe both sides of the outlet tube clean.

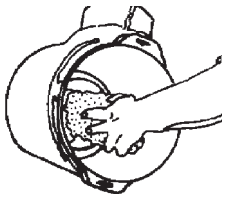

Inner edge of the outlet tube

If your air cleaner is equipped with a Vacuator Valve
Visually check and physically squeeze to make sure the valve is flexible and not inverted, damaged or plugged.

3 Inspect the Old Filter for Leak Clues

Visually inspect the old filter for any signs of leaks. A streak of dust on the clean side of the filter is a telltale sign. Remove any cause of leaks before installing new filter.

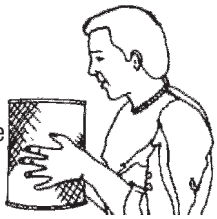

4 Inspect the New Filter for Damage

Inspect the new filter carefully, paying attention to the inside of the open end, which is the sealing area. NEVER install a damaged filter. A new Donaldson radial seal filter may have a dry lubricant on the seal to aid installation.

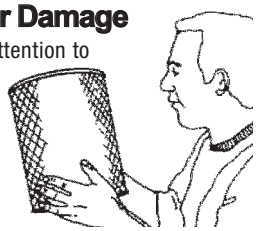

5 Insert the New Radial Seal Filter Properly

If you're servicing the safety filter, this should be seated into position before installing the primary filter.

Insert the new filter carefully. Seat the filter by hand, making certain it is completely into the air cleaner housing before securing the cover in place.

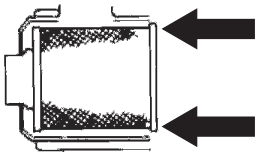

The critical sealing area will stretch slightly, adjust itself and distribute the sealing pressure evenly. To complete a tight seal, apply pressure by hand at the outer rim of the filter, not the flexible center. (Avoid pushing on the center of the urethane end cap.) No cover pressure is required to hold the seal. NEVER use the service cover to push the filter into place! Using the cover to push the filter in could cause damage to the housing, cover fasteners and will void the warranty.

If the service cover hits the filter before it is fully in place, remove the cover and push the filter (by hand) further into the air cleaner and try again. The cover should go on with no extra force.

Once the filter is in place, secure the service cover.

Caution

NEVER use the service cover to push the filter into place! Using the cover to push the filter in could cause damage to the housing, cover fasteners and will void the warranty.

6 Check Connectors for Tight Fit

Make sure that all mounting bands, clamps, bolts, and connections in the entire air cleaner system are tight. Check for holes in piping and repair if needed. Any leaks in your intake piping will send dust directly to the engine!

FUEL FILTERS

⚠ WARNING

When working on the fuel system

- **Keep naked lights away, do not smoke!**
- **Do not spill fuel!**

The Air Vantage® 600X PLUS is equipped with a pre-filter / water separator before the electric lift pump and a fuel filter after the lift pump and before the injectors. Open the drain on the fuel pre-filter / water separator and drain out any water daily. Clos drain when diesel fuel starts to come out. If excessive water is in the fuel, the engine will not start. The procedure for changing the filter is as follows:

1. Close the fuel shutoff valve.
2. Clean the area around the fuel filter head. Remove the filter Clean the gasket surface of the filter head and replace the o-ring.
3. Fill the clean filter with clean fuel, and lubricate the o-ring seal with clean lubricating oil.
4. Install the filter as specified by the filter manufacturer.

⚠ WARNING

Mechanical over tightened will distort the threads, filter element seal or filter can.

COOLING SYSTEM

The cooling system of the Deutz engine needs to be checked and cleaned periodically. (Consult the Engine Owner's Manual for the proper procedures and frequency).

Coolant needs to be added at the radiator filler neck after removing cap when system is cool. Fill to top of filler neck. Engine will not start if coolant level is too low.

The coolant system is equipped with an internal expansion tank located inside the top radiator tank. This allows for normal thermal expansion and contraction of the engine coolant. The system is fitted with a “catch only” reservoir to keep and rejected or excess coolant from entering the environment. Check periodically and empty as required. **Do not ÿll with coolant.**

CHECKING AND REPLACING COOLANT

⚠ WARNING

HOT COOLANT can burn skin. Do not remove cap if radiator is hot.

Check the coolant level by observing the level in the radiator. Add 50/50 antifreeze / water solution if the level is low by removing the radiator cap and adding coolant into the radiator. Fill up to the tube in the radiator filler neck.

To drain the coolant, open the valve at the bottom of the radiator. Open the radiator cap to allow complete drainage. (Tighten the valve and refill with a 50/50 antifreese/water solution.) Use an automotive grade (low silicate) ethylene glycol antifreeze. The cooling system capacity is 2.5 US gal. (9.5L). Squeeze upper and lower radiator hoses while filling to bleed air from system coolant. Replace and tighten the radiator cap.

Periodically remove the dirt from the radiator fins.

Periodically check the fan belt and radiator hoses. Replace if signs of deterioration are found.

⚠ CAUTION

Always premix the antifreeze and clean tap water before adding to the radiator. It is very important that a precise 50/50 solution be used with this engine year round. This gives proper cooling during hot weather and freezing protection to -34° F (-37° C).

Cooling solution exceeding 50% ethylene glycol can result in engine overheating and damage to the engine. Coolant solution must be premixed before adding to radiator.

BATTERY HANDLING

⚠ WARNING

GASES FROM BATTERY can explode.

- **Keep sparks, flame and cigarettes away from battery.**

To prevent EXPLOSION when:

- **INSTALLING A NEW BATTERY - disconnect negative cable from old battery first and connect to new battery last.**
- **CONNECTING A BATTERY CHARGER - Remove battery from welder by disconnecting negative cable first, then positive cable and battery clamp. When reinstalling, connect negative cable last. Keep well ventilated.**
- **USING A BOOSTER - connect positive lead to battery first then connect negative lead to engine foot.**

BATTERY ACID CAN BURN EYES AND SKIN.

- **Wear gloves and eye protection and be careful when working near battery. Follow instructions printed on battery.**

PREVENTING ELECTRICAL DAMAGE

1. When replacing, jumping, or otherwise connecting the battery to the battery cables, the proper polarity must be observed. Failure to observe the proper polarity could result in damage to the charging circuit. The positive (+) battery cable has a red terminal cover.
2. If the battery requires charging from an external charger, disconnect the negative battery cable first and then the positive battery cable before attaching the charger leads. Failure to do so can result in damage to the internal charger components. When reconnecting the cables, connect the positive cable first and the negative cable last.

PREVENTING BATTERY DISCHARGE - Turn the RUN/STOP switch to stop when engine is not running.

PREVENTING BATTERY BUCKLING - Tighten nuts on battery clamp until snug.

CHARGING THE BATTERY -When you charge, jump, replace, or otherwise connect battery cables to the battery, be sure the polarity is correct. Improper polarity can damage the charging circuit. The Air Vantage® 600X PLUS positive (+) battery terminal has a red terminal cover.

If you need to charge the battery with an external charger, disconnect the negative cable first, then the positive cable before you attach the charger leads. After the battery is charged, reconnect the positive battery cable first and the negative cable last. Failure to do so can result in damage to the internal charger components.

Follow the instructions of the battery charger manufacturer for proper charger settings and charging time.

ENGINE OIL CHANGE

Drain the engine oil while the engine is warm to assure rapid and complete draining. It is recommended that each time the oil is changed the oil filter be changed as well.

- Be sure the unit is off. Disconnect the negative battery cable to ensure safety.
- Locate oil drain hose and valve in bottom of base and pull through the hole in the battery access panel on the welder.
- Remove the cap from the drain valve. Push valve in and twist counterclockwise. Pull to open and drain the oil into a suitable container for disposal.
- Close the drain valve by pushing in and twisting clockwise. Replace the cap.
- Re-fill the crankcase to the upper limit mark on the dipstick with the recommended oil. Replace and tighten the oil filter cap securely.
- Push oil drain hose and valve back into unit, re-connect negative battery cable, and close doors and engine top cover before restarting unit.Wash your hands with soap and water after handling used motor oil. Please dispose of used motor oil in a manner that is compatible with the environment. We suggest you take it in a sealed container to your local service station or recycling center for reclamation. DO NOT throw it in the trash, pour it on the ground, or down a drain.

SAE 10W-30 oil that meets API class CJ-4 or better is recommended for general, all temperature use, 5F to 104F (-15C to 40C).

See Engine Owner's Manual for more specific information on oil viscosity recommendations.

Oil Filter Change

- Drain the oil.
- Remove the oil filter with an oil filter wrench and drain the oil into a suitable container. Discard the used filter. Note: Care should be taken during filter removal to not disrupt or damage in any way the fuel lines.
- Clean the filter mounting base and coat the gasket of the new filter with clean engine oil.
- Screw the new filter on by hand until the gasket contacts the mounting base. Using an oil filter wrench, tighten the filter an additional 1/2 to 7/8 of a turn.
- Refill the crankcase with the specified amount of the recommended engine oil. Reinstall the oil filter cap and tighten securely.
- Start the engine and check for oil filter leaks.
- Stop the engine and check the oil level. If necessary, add oil to the upper limit mark on the dipstick.

TIGHTENING THE FAN BELT

If the fan belt is loose, the engine can overheat and the battery lose its charge. Check tightness by pressing on the belt midway between the pulleys. For tightness requirements, please refer to the Engine Owner's Manual.

NAMEPLATES / WARNING DECALS MAINTENANCE

Whenever routine maintenance is performed on this machine - or at least yearly - inspect all nameplates and labels for legibility. Replace those which are no longer clear. Refer to the parts list for the replacement item number.

STORAGE

Store the Air Vantage® 600X PLUS in clean, dry protected areas.

TABLE D.1

REPLACEMENT SERVICE ITEMS			
ITEM	MAKE	PART NUMBER	SERVICE INTERVAL
AIR CLEANER ELEMENT	DONALDSON FLEETGUARD	P828889 AF25557	(WITH SERVICE INDICATOR) CLEAN AS NEEDED, REPLACE AS INDICATED BY THE SERVICE INDICATOR (WITHOUT SERVICE INDICATOR) CLEAN AS NEEDED, REPLACE EVERY 200 HOURS.
OIL FILTER	DEUTZ	01174416	REPLACE EVERY 500 HOURS OR 12 MONTHS, WHICHEVER IS LESS
FAN BELT	DEUTZ	04131488	REPLACE EVERY 1500 HOURS
FUEL FILTER	DEUTZ	04137456	REPLACE EVERY 500 HOURS OR 24 MONTHS, WHICHEVER IS LESS
FUEL FILTER/ WATER SEPARATOR	DEUTZ	04130241	CLEAN AS NEEDED, REPLACE EVERY 1000 HOURS
BATTERY	——	BCI GROUP 34	INSPECT EVERY 500 HOURS
ENGINE OIL CHANGE	SEE MANUAL	——	CHANGE EVERY 500 HOURS OR 6 MONTHS, WHICHEVER IS LESS. CHECK DAILY.

S29926

TROUBLESHOOTING

HOW TO USE TROUBLESHOOTING GUIDE

⚠ WARNING

Service and Repair should only be performed by Lincoln Electric Factory Trained Personnel. Unauthorized repairs performed on this equipment may result in danger to the technician and machine operator and will invalidate your factory warranty. For your safety and to avoid Electrical Shock, please observe all safety notes and precautions detailed throughout this manual.

This Troubleshooting Guide is provided to help you locate and repair possible machine malfunctions. Simply follow the three-step procedure listed below.

Step 1. LOCATE PROBLEM (SYMPTOM).

Look under the column labeled “PROBLEM (SYMPTOMS)”. This column describes possible symptoms that the machine may exhibit. Find the listing that best describes the symptom that the machine is exhibiting.

Step 2. POSSIBLE CAUSE.

The second column labeled “POSSIBLE CAUSE” lists the obvious external possibilities that may contribute to the machine symptom.

Step 3. RECOMMENDED COURSE OF ACTION

This column provides a course of action for the Possible Cause, generally it states to contact your local Lincoln Authorized Field Service Facility.

If you do not understand or are unable to perform the Recommended Course of Action safely, contact your local Lincoln Authorized Field Service Facility.

If for any reason you do not understand the test procedures or are unable to perform the tests/repairs safely, contact your Lincoln Authorized Service Facility for technical troubleshooting assistance before you proceed.

WWW.LINCOLNELECTRIC.COM/LOCATOR

Observe all Safety Guidelines detailed throughout this manual

PROBLEMS (SYMPTOMS)	POSSIBLE CAUSE	RECOMMENDED COURSE OF ACTION
ENGINE PROBLEMS		
Major Physical or Electrical Damage is Evident.	1. Contact your Local Lincoln Authorized Field Service Facility.	If all recommended possible areas of misadjustment have been checked and the problem persists, **Contact your local Lincoln Authorized Field Service Facility.**
Engine will not crank	1. Battery low. 2. Loose battery cable connections which may need Inspected, cleaned or tighten. 3. Faulty wiring in engine starting circuit. 4. Faulty engine starter. Contact authorized local Engine Service Shop. 5. If check engine light is on contact your Field Service Facility. 6. Check 30A Breaker (ECU).	
Engine will crank but not start.	1. Out of fuel. 2. Fuel shut off valve is in the off position make sure the valve lever is in the open position (lever in-line with the Hose). 3. Engine shut down solenoid not pulling in. 4. On/Off switch on for more than 30 sec. before starting, the On/Off switch will need to be switch off and turned back on. 5. Fuel Filters dirty/clogged, main filter element and/or Inline Fuel Filter may need to be replaced. 6. High oil temperature or low oil pressure. (engine protection light lit)	
Engine shuts down shortly after starting.	1. Low oil pressure (engine protection light lit). Check oil level (Consult engine service dealer). 2. High oil temperature. Check engine cooling system. (engine protection light lit). 3. Faulty oil pressure switch. 4. Faulty oil temperature switch. Contact authorized local Engine Service Shop. 5. Check coolant level.	
Engine shuts down while under a load.	1. High oil temperature.	
Engine runs rough.	1. Dirty fuel or air filters may need cleaned/replaced. 2. Water in fuel.	
Engine will not shut off.	1. Fuel Shutdown solenoid not functioning properly.	

If for any reason you do not understand the test procedures or are unable to perform the tests/repairs safely, contact your Lincoln Authorized Service Facility for technical troubleshooting assistance before you proceed.
WWW.LINCOLNELECTRIC.COM/LOCATOR

Observe all Safety Guidelines detailed throughout this manual

PROBLEMS (SYMPTOMS)	POSSIBLE CAUSE	RECOMMENDED COURSE OF ACTION
FUNCTION PROBLEMS		
Battery does not stay charged.	1. Faulty battery. 2. Faulty engine alternator. 3. Loose or broken lead in charging circuit. 4. Loose fan belt may need tightening.	If all recommended possible areas of misadjustment have been checked and the problem persists, **Contact your local Lincoln Authorized Field Service Facility.**
Engine will not idle down to low speed.	1. Idler switch in HIGH idle position, make sure switch is set to AUTO. 2. Faulty relay. 3. Faulty Weld Control PCB (Printed Circuit Board)	
Engine will not go to high idle when attempting to weld.	1. Poor work lead connection to work. 2. Welding Terminals switch in wrong position. 3. No open circuit voltage at output studs. 4. Faulty Weld Control PCB.	
Engine will not go to high idle when using auxiliary power.	1. Broken wire in auxiliary current sensor wiring. 2. Auxiliary power load is less than 100 watts. 3. Faulty Weld Control PCB.	

If for any reason you do not understand the test procedures or are unable to perform the tests/repairs safely, contact your Lincoln Authorized Service Facility for technical troubleshooting assistance before you proceed.
WWW.LINCOLNELECTRIC.COM/LOCATOR

Observe all Safety Guidelines detailed throughout this manual

PROBLEMS (SYMPTOMS)	POSSIBLE CAUSE	RECOMMENDED COURSE OF ACTION
FUNCTION PROBLEMS		
Engine goes to low idle but does not stay at low idle.	1. Faulty Weld Control PCB or Idler relay.	If all recommended possible areas of misadjustment have been checked and the problem persists, **Contact your local Lincoln Authorized Field Service Facility.**
No welding output or auxiliary output.	1. Broken lead in rotor circuit. 2. Faulty field diode module. 3. Faulty Weld Control PCB. 4. Faulty rotor.	
Welder has some/ no output and no control. Auxiliary output OK	1. Faulty remote kit. 2. Faulty output control potentiometer. 3. Faulty output control wiring. 4. Faulty Weld Control PCB, Idler/Engine Protection PCB or Chopper PCB.	
No welding output. Auxiliary output OK.	1. WELDING TERMINALS switch in wrong position, be sure switch is in WELDING TERMINALS ALWAYS ON position. 2. Faulty Weld Control PCB, Idler/Engine Protection PCB or Chopper PCB.	
No auxiliary power.	1. Open breakers may need to be reset. 2. Faulty receptacle. 3. Faulty auxiliary circuit wiring. 4. RCD tripped.	

If for any reason you do not understand the test procedures or are unable to perform the tests/repairs safely, contact your Lincoln Authorized Service Facility for technical troubleshooting assistance before you proceed.
WWW.LINCOLNELECTRIC.COM/LOCATOR

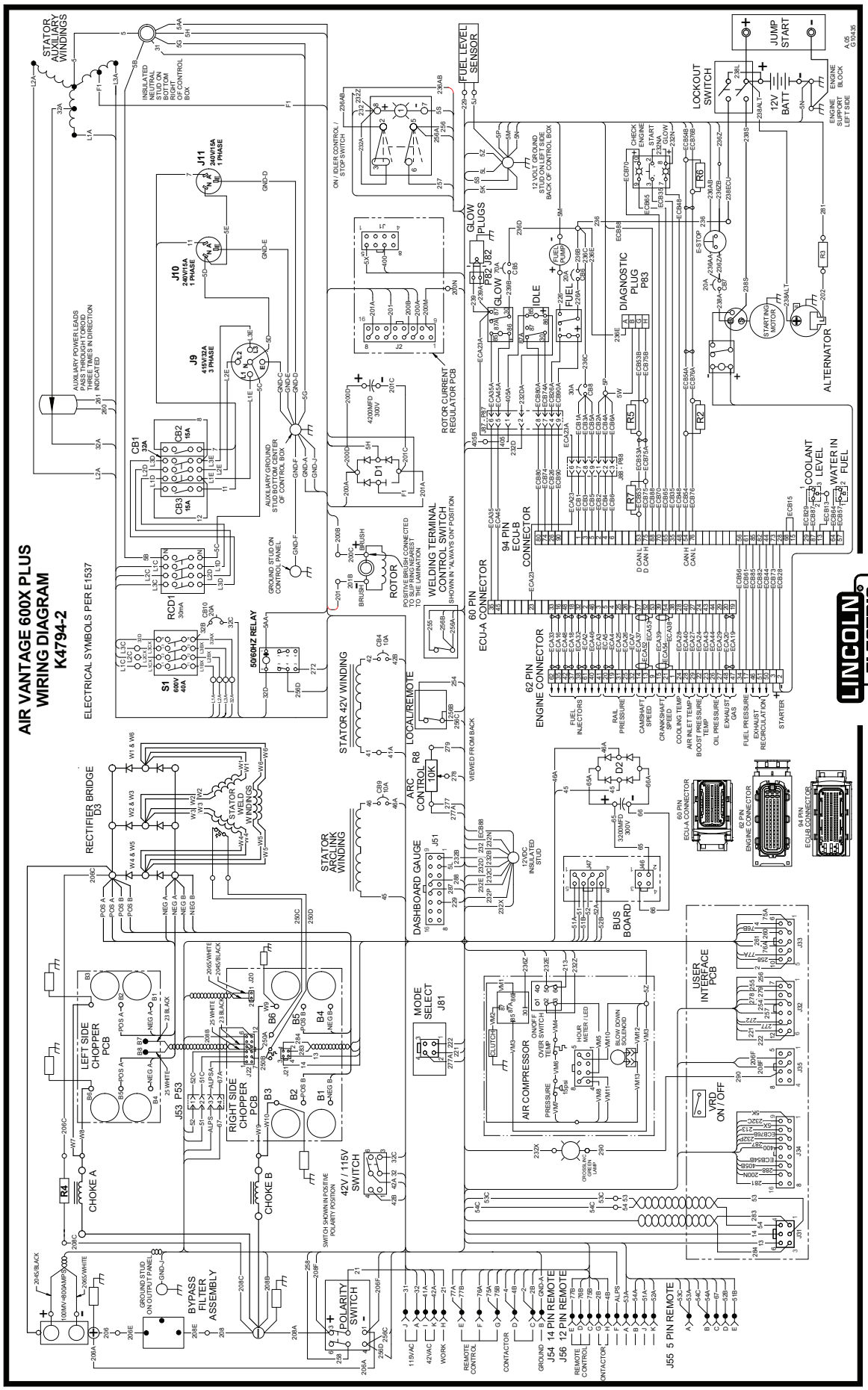

NOTE: This diagram is for reference only. It may not be accurate for all machines covered by this manual. The specific diagram for a particular code is located in the literature container supplied with the machine. If the diagram is illegible, contact the Service Department for a replacement. Give the equipment code number.

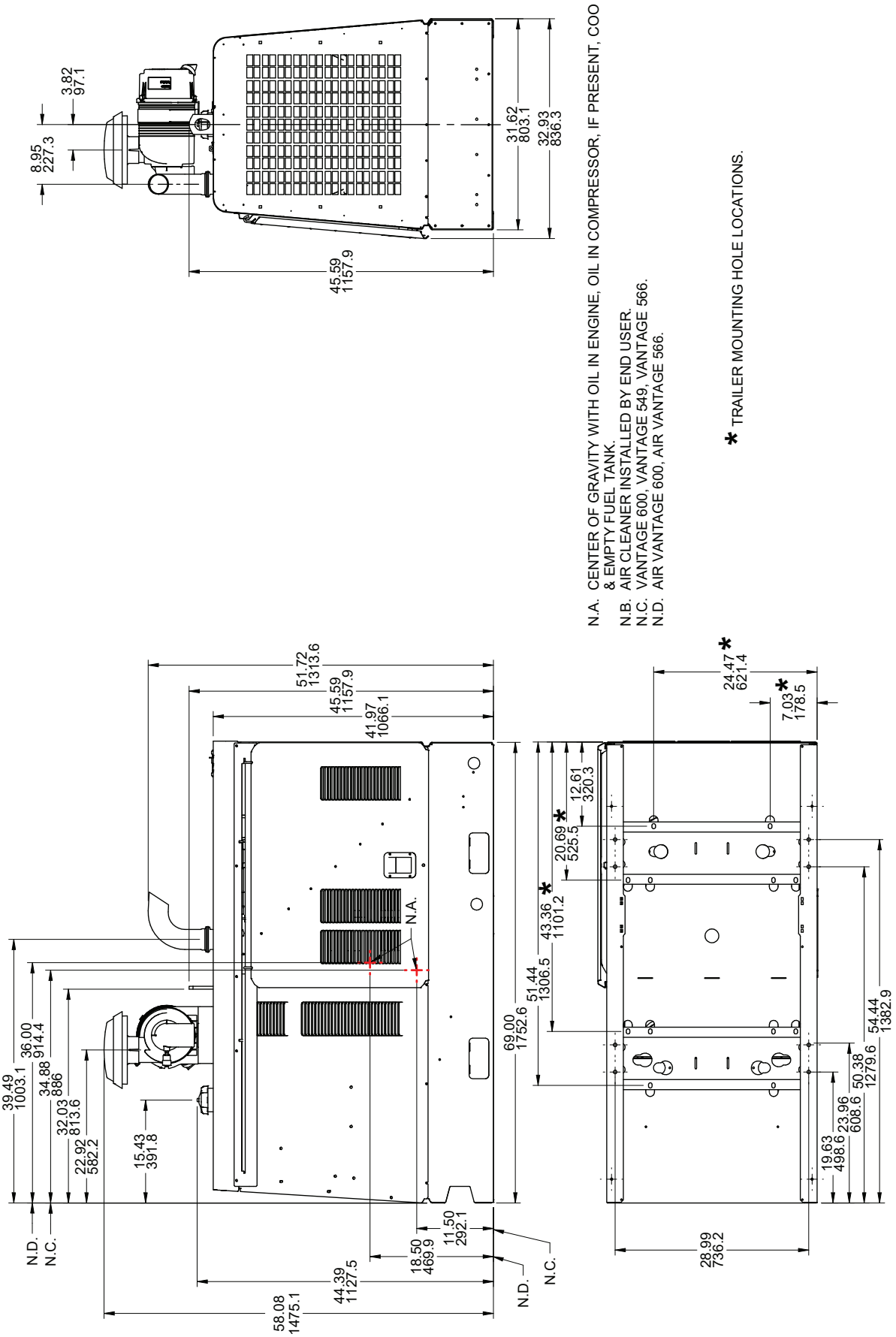

NOTE: This diagram is for reference only. It may not be accurate for all machines covered by this manual.

This page intentionally left blank

This page intentionally left blank

This page intentionally left blank

WARNING	● Do not touch electrically live parts or electrode with skin or wet clothing. ● Insulate yourself from work and ground.	● Keep flammable materials away.	● Wear eye, ear and body protection.
Spanish **AVISO DE PRECAUCION**	● No toque las partes o los electrodos bajo carga con la piel o ropa mojada. ● Aislese del trabajo y de la tierra.	● Mantenga el material combustible fuera del área de trabajo.	● Protéjase los ojos, los oídos y el cuerpo.
French **ATTENTION**	● Ne laissez ni la peau ni des vêtements mouillés entrer en contact avec des pièces sous tension. ● Isolez-vous du travail et de la terre.	● Gardez à l'écart de tout matériel inflammable.	● Protégez vos yeux, vos oreilles et votre corps.
German **WARNUNG**	● Berühren Sie keine stromführenden Teile oder Elektroden mit Ihrem Körper oder feuchter Kleidung! ● Isolieren Sie sich von den Elektroden und dem Erdboden!	● Entfernen Sie brennbarres Material!	● Tragen Sie Augen-, Ohren- und Körperschutz!
Portuguese **ATENÇÃO**	● Não toque partes elétricas e electrodos com a pele ou roupa molhada. ● Isole-se da peça e terra.	● Mantenha inflamáveis bem guardados.	● Use proteção para a vista, ouvido e corpo.
Japanese **注意事項**	● 通電中の電気部品、又は溶材にヒフやぬれた布で触れないこと。 ● 施工物やアースから身体が絶縁されている様にして下さい。	● 燃えやすいものの側での溶接作業は絶対にしてはなりません。	● 目、耳及び身体に保護具をして下さい。
Chinese **警 告**	● 皮肤或濕衣物切勿接觸帶電部件及銲條。 ● 使你自己與地面和工件絶緣。	● 把一切易燃物品移離工作場所。	● 佩戴眼、耳及身體勞動保護用具。
Korean **위 험**	● 전도체나 용접봉을 젖은 헝겁 또는 피부로 절대 접촉치 마십시요. ● 모재와 접지를 접촉치 마십시요.	● 인화성 물질을 접근 시키지 마시요.	● 눈, 귀와 몸에 보호장구를 착용하십시요.
Arabic **تحذير**	● لا تلمس الاجزاء التي يسري فيها التيار الكهربائي أو الالكترود بجلد الجسم أو بالملابس المبللة بالماء. ● ضع عازلا على جسمك خلال العمل.	● ضع المواد القابلة للاشتعال في مكان بعيد.	● ضع أدوات وملابس واقية على عينيك وأذنيك وجسمك.

READ AND UNDERSTAND THE MANUFACTURER'S INSTRUCTION FOR THIS EQUIPMENT AND THE CONSUMABLES TO BE USED AND FOLLOW YOUR EMPLOYER'S SAFETY PRACTICES.

SE RECOMIENDA LEER Y ENTENDER LAS INSTRUCCIONES DEL FABRICANTE PARA EL USO DE ESTE EQUIPO Y LOS CONSUMIBLES QUE VA A UTILIZAR, SIGA LAS MEDIDAS DE SEGURIDAD DE SU SUPERVISOR.

LISEZ ET COMPRENEZ LES INSTRUCTIONS DU FABRICANT EN CE QUI REGARDE CET EQUIPMENT ET LES PRODUITS A ETRE EMPLOYES ET SUIVEZ LES PROCEDURES DE SECURITE DE VOTRE EMPLOYEUR.

LESEN SIE UND BEFOLGEN SIE DIE BETRIEBSANLEITUNG DER ANLAGE UND DEN ELEKTRODENEINSATZ DES HERSTELLERS. DIE UNFALLVERHÜTUNGSVORSCHRIFTEN DES ARBEITGEBERS SIND EBENFALLS ZU BEACHTEN.

● Keep your head out of fumes. ● Use ventilation or exhaust to remove fumes from breathing zone.	● Turn power off before servicing.	● Do not operate with panel open or guards off.	**WARNING**
● Los humos fuera de la zona de respiración. ● Mantenga la cabeza fuera de los humos. Utilice ventilación o aspiración para gases.	● Desconectar el cable de alimentación de poder de la máquina antes de iniciar cualquier servicio.	● No operar con panel abierto o guardas quitadas.	Spanish **AVISO DE PRECAUCION**
● Gardez la tête à l'écart des fumées. ● Utilisez un ventilateur ou un aspirateur pour ôter les fumées des zones de travail.	● Débranchez le courant avant l'entretien.	● N'opérez pas avec les panneaux ouverts ou avec les dispositifs de protection enlevés.	French **ATTENTION**
● Vermeiden Sie das Einatmen von Schweibrauch! ● Sorgen Sie für gute Be- und Entlüftung des Arbeitsplatzes!	● Strom vor Wartungsarbeiten abschalten! (Netzstrom völlig öffnen; Maschine anhalten!)	● Anlage nie ohne Schutzgehäuse oder Innenschutzverkleidung in Betrieb setzen!	German **WARNUNG**
● Mantenha seu rosto da fumaça. ● Use ventilação e exhaustão para remover fumo da zona respiratória.	● Não opere com as tampas removidas. ● Desligue a corrente antes de fazer serviço. ● Não toque as partes elétricas nuas.	● Mantenha-se afastado das partes moventes. ● Não opere com os paineis abertos ou guardas removidas.	Portuguese **ATENÇÃO**
● ヒュームから頭を離すようにして下さい。 ● 換気や排煙に十分留意して下さい。	● メンテナンス・サービスに取りかかる際には、まず電源スイッチを必ず切って下さい。	● パネルやカバーを取り外したままで機械操作をしないで下さい。	Japanese **注意事項**
● 頭部遠離煙霧。 ● 在呼吸區使用通風或排風器除煙。	● 維修前切斷電源。	● 儀表板打開或沒有安全罩時不準作業。	Chinese **警 告**
● 얼굴로부터 용접가스를 멀리하십시요. ● 호흡지역으로부터 용접가스를 제거하기 위해 가스제거기나 통풍기를 사용하십시요.	● 보수전에 전원을 차단하십시요.	● 판넬이 열린 상태로 작동치 마십시요.	Korean **위 험**
● ابعد رأسك بعيداً عن الدخان. ● استعمل التهوية أو جهاز ضغط الدخان للخارج لكي تبعد الدخان عن المنطقة التي تتنفس فيها.	● اقطع التيار الكهربائي قبل القيام بأية صيانة.	● لا تشغل هذا الجهاز اذا كانت الاغطية الحديدية الواقية ليست عليه.	Arabic **تحذير**

LEIA E COMPREENDA AS INSTRUÇÕES DO FABRICANTE PARA ESTE EQUIPAMENTO E AS PARTES DE USO, E SIGA AS PRÁTICAS DE SEGURANÇA DO EMPREGADOR.

使う機械や溶材のメーカーの指示書をよく読み、まず理解して下さい。そして貴社の安全規定に従って下さい。

請詳細閱讀並理解製造廠提供的説明以及應該使用的銀捍材料，並請遵守貴方的有関勞動保護規定。

이 제품에 동봉된 작업지침서를 숙지하시고 귀사의 작업자 안전수칙을 준수하시기 바랍니다.

اقرأ بتمعن وافهم تعليمات المصنع المنتج لهذه المعدات والمواد قبل استعمالها واتبع تعليمات الوقاية لصاحب العمل.

CUSTOMER ASSISTANCE POLICY

The business of The Lincoln Electric Company is manufacturing and selling high quality welding equipment, consumables, and cutting equipment. Our challenge is to meet the needs of our customers and to exceed their expectations. On occasion, purchasers may ask Lincoln Electric for advice or information about their use of our products. We respond to our customers based on the best information in our possession at that time. Lincoln Electric is not in a position to warrant or guarantee such advice, and assumes no liability, with respect to such information or advice. We expressly disclaim any warranty of any kind, including any warranty of fitness for any customer's particular purpose, with respect to such information or advice. As a matter of practical consideration, we also cannot assume any responsibility for updating or correcting any such information or advice once it has been given, nor does the provision of information or advice create, expand or alter any warranty with respect to the sale of our products.

Lincoln Electric is a responsive manufacturer, but the selection and use of specific products sold by Lincoln Electric is solely within the control of, and remains the sole responsibility of the customer. Many variables beyond the control of Lincoln Electric affect the results obtained in applying these types of fabrication methods and service requirements.

Subject to Change – This information is accurate to the best of our knowledge at the time of printing. Please refer to www.lincolnelectric.com for any updated information.

WELD FUME CONTROL EQUIPMENT

The operation of welding fume control equipment is affected by various factors including proper use and positioning of the equipment, maintenance of the equipment and the specific welding procedure and application involved. Worker exposure level should be checked upon installation and periodically thereafter to be certain it is within applicable OSHA PEL and ACGIH TLV limits.

THE LINCOLN ELECTRIC COMPANY
22801 St. Clair Avenue • Cleveland, OH • 44117-1199 • U.S.A.
Phone: +1.216.481.8100 • www.lincolnelectric.com