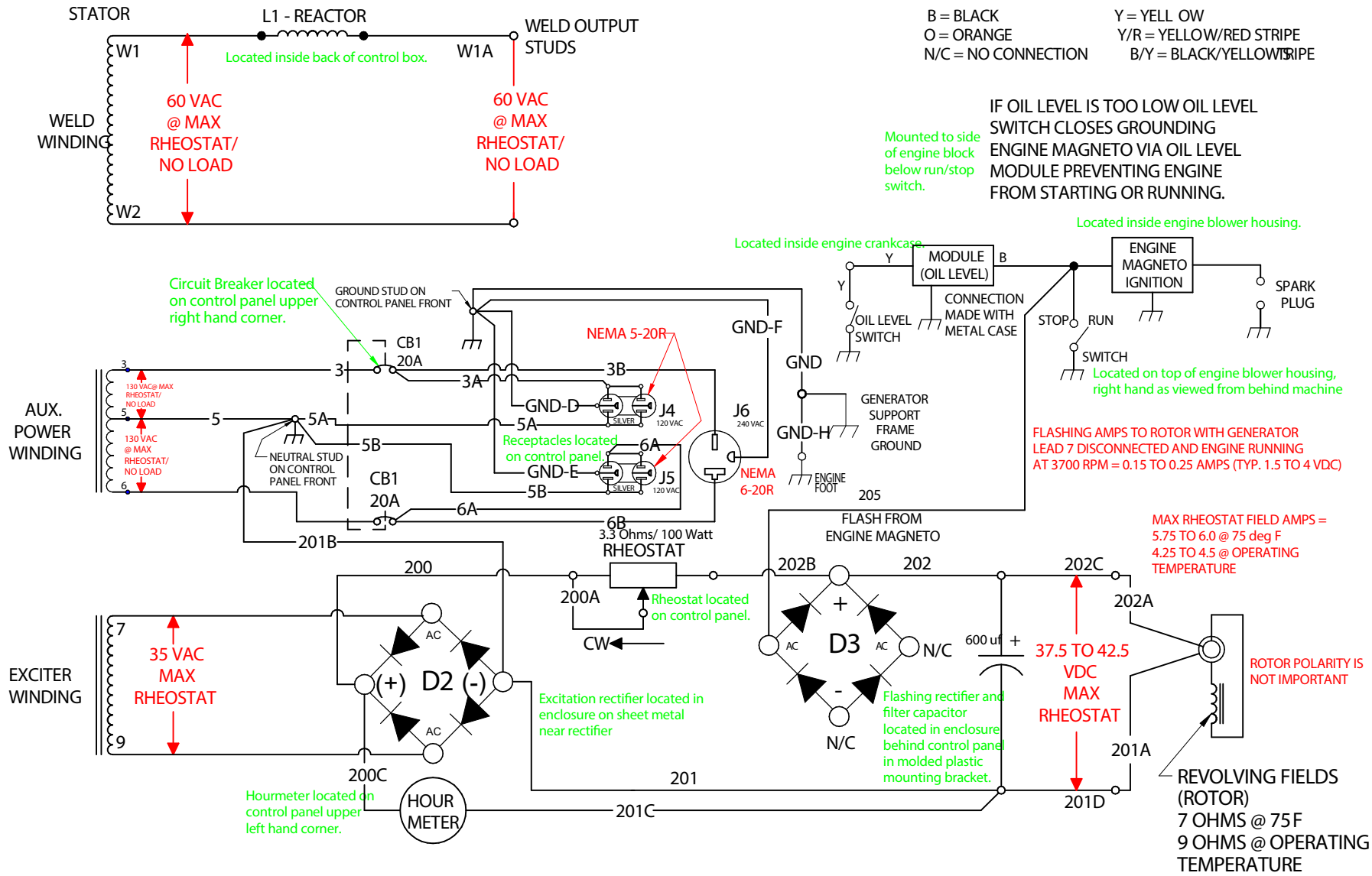BULLDOG 5500 MACHINE SCHEMATIC S28625 REV: A