Operator's Manual

VANTAGE® 300

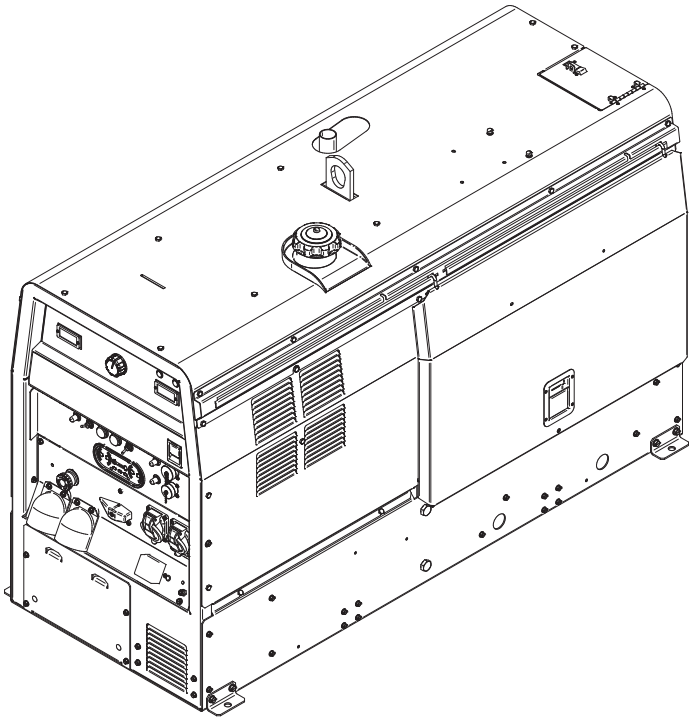

For use with machines having Code Numbers:

12384, 12508

Register your machine:
www.lincolnelectric.com/register

Authorized Service and Distributor Locator:
www.lincolnelectric.com/locator

Save for future reference

Date Purchased

Code: (ex: 10859)

Serial: (ex: U1060512345)

Need Help? Call 1.888.935.3877
to talk to a Service Representative

Hours of Operation:
8:00 AM to 6:00 PM (ET) Mon. thru Fri.

After hours?
Use "Ask the Experts" at lincolnelectric.com
A Lincoln Service Representative will contact you no later than the following business day.

For Service outside the USA:
Email: globalservice@lincolnelectric.com

IM10211-A | Issue Date 07-15

© Lincoln Global, Inc. All Rights Reserved.

THE LINCOLN ELECTRIC COMPANY
22801 St. Clair Avenue • Cleveland, OH • 44117-1199 • U.S.A.
Phone: +1.216.481.8100 • www.lincolnelectric.com

THANK YOU FOR SELECTING A QUALITY PRODUCT BY LINCOLN ELECTRIC.

PLEASE EXAMINE CARTON AND EQUIPMENT FOR DAMAGE IMMEDIATELY

When this equipment is shipped, title passes to the purchaser upon receipt by the carrier. Consequently, claims for material damaged in shipment must be made by the purchaser against the transportation company at the time the shipment is received.

SAFETY DEPENDS ON YOU

Lincoln arc welding and cutting equipment is designed and built with safety in mind. However, your overall safety can be increased by proper installation ... and thoughtful operation on your part. **DO NOT INSTALL, OPERATE OR REPAIR THIS EQUIPMENT WITHOUT READING THIS MANUAL AND THE SAFETY PRECAUTIONS CONTAINED THROUGHOUT.** And, most importantly, think before you act and be careful.

⚠ WARNING

This statement appears where the information must be followed exactly to avoid serious personal injury or loss of life.

⚠ CAUTION

This statement appears where the information must be followed to avoid minor personal injury or damage to this equipment.

KEEP YOUR HEAD OUT OF THE FUMES.

DON'T get too close to the arc. Use corrective lenses if necessary to stay a reasonable distance away from the arc.

READ and obey the Safety Data Sheet (SDS) and the warning label that appears on all containers of welding materials.

USE ENOUGH VENTILATION or exhaust at the arc, or both, to keep the fumes and gases from your breathing zone and the general area.

IN A LARGE ROOM OR OUTDOORS, natural ventilation may be adequate if you keep your head out of the fumes (See below).

USE NATURAL DRAFTS or fans to keep the fumes away from your face.

If you develop unusual symptoms, see your supervisor. Perhaps the welding atmosphere and ventilation system should be checked.

WEAR CORRECT EYE, EAR & BODY PROTECTION

PROTECT your eyes and face with welding helmet properly fitted and with proper grade of filter plate (See ANSI Z49.1).

PROTECT your body from welding spatter and arc flash with protective clothing including woolen clothing, flame-proof apron and gloves, leather leggings, and high boots.

PROTECT others from splatter, flash, and glare with protective screens or barriers.

IN SOME AREAS, protection from noise may be appropriate.

BE SURE protective equipment is in good condition.

Also, wear safety glasses in work area **AT ALL TIMES.**

SPECIAL SITUATIONS

DO NOT WELD OR CUT containers or materials which previously had been in contact with hazardous substances unless they are properly cleaned. This is extremely dangerous.

DO NOT WELD OR CUT painted or plated parts unless special precautions with ventilation have been taken. They can release highly toxic fumes or gases.

Additional precautionary measures

PROTECT compressed gas cylinders from excessive heat, mechanical shocks, and arcs; fasten cylinders so they cannot fall.

BE SURE cylinders are never grounded or part of an electrical circuit.

REMOVE all potential fire hazards from welding area.

ALWAYS HAVE FIRE FIGHTING EQUIPMENT READY FOR IMMEDIATE USE AND KNOW HOW TO USE IT.

SECTION A: WARNINGS

CALIFORNIA PROPOSITION 65 WARNINGS

WARNING: Breathing diesel engine exhaust exposes you to chemicals known to the State of California to cause cancer and birth defects, or other reproductive harm.

- Always start and operate the engine in a well-ventilated area.
- If in an exposed area, vent the exhaust to the outside.
- Do not modify or tamper with the exhaust system.
- Do not idle the engine except as necessary.

For more information go to www.P65 warnings.ca.gov/diesel

WARNING: This product, when used for welding or cutting, produces fumes or gases which contain chemicals known to the State of California to cause birth defects and, in some cases, cancer. (California Health & Safety Code § 25249.5 *et seq.)*

WARNING: Cancer and Reproductive Harm www.P65warnings.ca.gov

ARC WELDING CAN BE HAZARDOUS. PROTECT YOURSELF AND OTHERS FROM POSSIBLE SERIOUS INJURY OR DEATH. KEEP CHILDREN AWAY. PACEMAKER WEARERS SHOULD CONSULT WITH THEIR DOCTOR BEFORE OPERATING.

Read and understand the following safety highlights. For additional safety information, it is strongly recommended that you purchase a copy of "Safety in Welding & Cutting - ANSI Standard Z49.1" from the American Welding Society, P.O. Box 351040, Miami, Florida 33135 or CSA Standard W117.2-1974. A Free copy of "Arc Welding Safety" booklet E205 is available from the Lincoln Electric Company, 22801 St. Clair Avenue, Cleveland, Ohio 44117-1199.

BE SURE THAT ALL INSTALLATION, OPERATION, MAINTENANCE AND REPAIR PROCEDURES ARE PERFORMED ONLY BY QUALIFIED INDIVIDUALS.

FOR ENGINE POWERED EQUIPMENT.

1.a. Turn the engine off before troubleshooting and maintenance work unless the maintenance work requires it to be running.

1.b. Operate engines in open, well-ventilated areas or vent the engine exhaust fumes outdoors.

1.c. Do not add the fuel near an open flame welding arc or when the engine is running. Stop the engine and allow it to cool before refueling to prevent spilled fuel from vaporizing on contact with hot engine parts and igniting. Do not spill fuel when filling tank. If fuel is spilled, wipe it up and do not start engine until fumes have been eliminated.

1.d. Keep all equipment safety guards, covers and devices in position and in good repair. Keep hands, hair, clothing and tools away from V-belts, gears, fans and all other moving parts when starting, operating or repairing equipment.

1.e. In some cases it may be necessary to remove safety guards to perform required maintenance. Remove guards only when necessary and replace them when the maintenance requiring their removal is complete. Always use the greatest care when working near moving parts.

1.f. Do not put your hands near the engine fan. Do not attempt to override the governor or idler by pushing on the throttle control rods while the engine is running.

1.g. To prevent accidentally starting gasoline engines while turning the engine or welding generator during maintenance work, disconnect the spark plug wires, distributor cap or magneto wire as appropriate.

1.h. To avoid scalding, do not remove the radiator pressure cap when the engine is hot.

ELECTRIC AND MAGNETIC FIELDS MAY BE DANGEROUS

2.a. Electric current flowing through any conductor causes localized Electric and Magnetic Fields (EMF). Welding current creates EMF fields around welding cables and welding machines

2.b. EMF fields may interfere with some pacemakers, and welders having a pacemaker should consult their physician before welding.

2.c. Exposure to EMF fields in welding may have other health effects which are now not known.

2.d. All welders should use the following procedures in order to minimize exposure to EMF fields from the welding circuit:

2.d.1. Route the electrode and work cables together - Secure them with tape when possible.

2.d.2. Never coil the electrode lead around your body.

2.d.3. Do not place your body between the electrode and work cables. If the electrode cable is on your right side, the work cable should also be on your right side.

2.d.4. Connect the work cable to the workpiece as close as possible to the area being welded.

2.d.5. Do not work next to welding power source.

ELECTRIC SHOCK CAN KILL.

3.a. The electrode and work (or ground) circuits are electrically "hot" when the welder is on. Do not touch these "hot" parts with your bare skin or wet clothing. Wear dry, hole-free gloves to insulate hands.

3.b. Insulate yourself from work and ground using dry insulation. Make certain the insulation is large enough to cover your full area of physical contact with work and ground.

In addition to the normal safety precautions, if welding must be performed under electrically hazardous conditions (in damp locations or while wearing wet clothing; on metal structures such as floors, gratings or scaffolds; when in cramped positions such as sitting, kneeling or lying, if there is a high risk of unavoidable or accidental contact with the workpiece or ground) use the following equipment:

- Semiautomatic DC Constant Voltage (Wire) Welder.
- DC Manual (Stick) Welder.
- AC Welder with Reduced Voltage Control.

3.c. In semiautomatic or automatic wire welding, the electrode, electrode reel, welding head, nozzle or semiautomatic welding gun are also electrically "hot".

3.d. Always be sure the work cable makes a good electrical connection with the metal being welded. The connection should be as close as possible to the area being welded.

3.e. Ground the work or metal to be welded to a good electrical (earth) ground.

3.f. Maintain the electrode holder, work clamp, welding cable and welding machine in good, safe operating condition. Replace damaged insulation.

3.g. Never dip the electrode in water for cooling.

3.h. Never simultaneously touch electrically "hot" parts of electrode holders connected to two welders because voltage between the two can be the total of the open circuit voltage of both welders.

3.i. When working above floor level, use a safety belt to protect yourself from a fall should you get a shock.

3.j. Also see Items 6.c. and 8.

ARC RAYS CAN BURN.

4.a. Use a shield with the proper filter and cover plates to protect your eyes from sparks and the rays of the arc when welding or observing open arc welding. Headshield and filter lens should conform to ANSI Z87. I standards.

4.b. Use suitable clothing made from durable flame-resistant material to protect your skin and that of your helpers from the arc rays.

4.c. Protect other nearby personnel with suitable, non-flammable screening and/or warn them not to watch the arc nor expose themselves to the arc rays or to hot spatter or metal.

FUMES AND GASES CAN BE DANGEROUS.

5.a. Welding may produce fumes and gases hazardous to health. Avoid breathing these fumes and gases. When welding, keep your head out of the fume. Use enough ventilation and/or exhaust at the arc to keep fumes and gases away from the breathing zone. **When welding hardfacing (see instructions on container or SDS) or on lead or cadmium plated steel and other metals or coatings which produce highly toxic fumes, keep exposure as low as possible and within applicable OSHA PEL and ACGIH TLV limits using local exhaust or mechanical ventilation unless exposure assessments indicate otherwise. In confined spaces or in some circumstances, outdoors, a respirator may also be required. Additional precautions are also required when welding on galvanized steel.**

5. b. The operation of welding fume control equipment is affected by various factors including proper use and positioning of the equipment, maintenance of the equipment and the specific welding procedure and application involved. Worker exposure level should be checked upon installation and periodically thereafter to be certain it is within applicable OSHA PEL and ACGIH TLV limits.

5.c. Do not weld in locations near chlorinated hydrocarbon vapors coming from degreasing, cleaning or spraying operations. The heat and rays of the arc can react with solvent vapors to form phosgene, a highly toxic gas, and other irritating products.

5.d. Shielding gases used for arc welding can displace air and cause injury or death. Always use enough ventilation, especially in confined areas, to insure breathing air is safe.

5.e. Read and understand the manufacturer's instructions for this equipment and the consumables to be used, including the Safety Data Sheet (SDS) and follow your employer's safety practices. SDS forms are available from your welding distributor or from the manufacturer.

5.f. Also see item 1.b.

WELDING AND CUTTING SPARKS CAN CAUSE FIRE OR EXPLOSION.

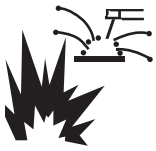

6.a. Remove fire hazards from the welding area. If this is not possible, cover them to prevent the welding sparks from starting a fire. Remember that welding sparks and hot materials from welding can easily go through small cracks and openings to adjacent areas. Avoid welding near hydraulic lines. Have a fire extinguisher readily available.

6.b. Where compressed gases are to be used at the job site, special precautions should be used to prevent hazardous situations. Refer to “Safety in Welding and Cutting” (ANSI Standard Z49.1) and the operating information for the equipment being used.

6.c. When not welding, make certain no part of the electrode circuit is touching the work or ground. Accidental contact can cause overheating and create a fire hazard.

6.d. Do not heat, cut or weld tanks, drums or containers until the proper steps have been taken to insure that such procedures will not cause flammable or toxic vapors from substances inside. They can cause an explosion even though they have been “cleaned”. For information, purchase “Recommended Safe Practices for the Preparation for Welding and Cutting of Containers and Piping That Have Held Hazardous Substances”, AWS F4.1 from the American Welding Society (see address above).

6.e. Vent hollow castings or containers before heating, cutting or welding. They may explode.

6.f. Sparks and spatter are thrown from the welding arc. Wear oil free protective garments such as leather gloves, heavy shirt, cuffless trousers, high shoes and a cap over your hair. Wear ear plugs when welding out of position or in confined places. Always wear safety glasses with side shields when in a welding area.

6.g. Connect the work cable to the work as close to the welding area as practical. Work cables connected to the building framework or other locations away from the welding area increase the possibility of the welding current passing through lifting chains, crane cables or other alternate circuits. This can create fire hazards or overheat lifting chains or cables until they fail.

6.h. Also see item 1.c.

6.I. Read and follow NFPA 51B “Standard for Fire Prevention During Welding, Cutting and Other Hot Work”, available from NFPA, 1 Batterymarch Park, PO box 9101, Quincy, MA 022690-9101.

6.j. Do not use a welding power source for pipe thawing.

CYLINDER MAY EXPLODE IF DAMAGED.

7.a. Use only compressed gas cylinders containing the correct shielding gas for the process used and properly operating regulators designed for the gas and pressure used. All hoses, fittings, etc. should be suitable for the application and maintained in good condition.

7.b. Always keep cylinders in an upright position securely chained to an undercarriage or fixed support.

7.c. Cylinders should be located:

- Away from areas where they may be struck or subjected to physical damage.
- A safe distance from arc welding or cutting operations and any other source of heat, sparks, or flame.

7.d. Never allow the electrode, electrode holder or any other electrically “hot” parts to touch a cylinder.

7.e. Keep your head and face away from the cylinder valve outlet when opening the cylinder valve.

7.f. Valve protection caps should always be in place and hand tight except when the cylinder is in use or connected for use.

7.g. Read and follow the instructions on compressed gas cylinders, associated equipment, and CGA publication P-I, “Precautions for Safe Handling of Compressed Gases in Cylinders,” available from the Compressed Gas Association, 14501 George Carter Way Chantilly, VA 20151.

FOR ELECTRICALLY POWERED EQUIPMENT.

8.a. Turn off input power using the disconnect switch at the fuse box before working on the equipment.

8.b. Install equipment in accordance with the U.S. National Electrical Code, all local codes and the manufacturer’s recommendations.

8.c. Ground the equipment in accordance with the U.S. National Electrical Code and the manufacturer’s recommendations.

Refer to http://www.lincolnelectric.com/safety for additional safety information.

Page

Installation ..... **Section A**
Technical Specifications A-1
Machine Specifications A-2
Safety Precautions A-3
VRD (Voltage Reduction Device) A-3
Location and Ventilation A-3
Stacking A-3
Angle of Operation A-3
Lifting A-4
High Altitude Operation A-4
High Temperature Operation A-4
Cold Weather Starting A-4
Towing A-4
Vehicle Mounting A-4
Pre-Operation Engine Service A-5
Oil A-5
Fuel A-5
Engine Cooling System A-5
Battery Connection A-5
Muffler Outlet Pipe A-5
Spark Arrester A-5
Remote Control A-6
Electrical Connections A-6
Machine Grounding A-6
Welding Terminals A-6
Welding Output Cables A-7
Cable Installation A-7
Auxiliary Power A-7
Standby Power Connections A-7
Connection of Lincoln Electric Wire Feeders A-8, A-9

Operation ..... **Section B**
Safety Precautions B-1
General Description B-1
For Auxiliary Power B-1
Engine Operation B-1
Add Fuel B-1
Break in Period B-1
Welding Controls B-2, B-3
Engine Controls B-4
Starting the Engine B-4
Stopping the Engine B-5
Welder Operation B-5
Duty Cycle and Electrode Information B-5
Constant Current (Stick) Welding B-5
Fuel Consumption B-5
Downhill Pipe (Stick) Welding B-6
TIG Welding B-6
Typical Current Ranges for Tungsten Electrodes B-6
Wire Welding-CV B-7
Arc Gouging B-7
Auxiliary Power B-7
Simultaneous Welding and Power Loads B-7
Extension Cord Length Recommendations B-7

Accessories ..... **Section C**
Field Installed Options / Accessories C-1

Page

Maintenance .....Section D
Safety Precautions D-1
Routine Maintenance D-1
Engine Service Items D-1
Engine Oil Change D-1, D-2
Engine Oil Filter Change D-2
Air Cleaner D-2
Service Instructions And Installation Tips for Engine Air Filter.....D-3
Cooling System.....D-4
Tightening the Fan Belt.....D-4
Fuel D-4
Bleeding the Fuel System D-4
Fuel Filter D-5
Engine Adjustment.....D-5
Battery Maintenance.....D-5
Cleaning the Battery D-5
Checking the Electrolyte Level D-5
Charging the Battery.....D-5
Servicing Optional Spark Arrestor.....D-5
Welder / Generator Maintenance.....D-6
Storage D-6
Cleaning.....D-6
Brush Removal and Replacement D-6

Troubleshooting.....Section E
How to Use Troubleshooting Guide.....E-1
Troubleshooting Guide.....E-2 thru E-6

Connection Diagrams, Wiring Diagrams and Dimension Print.....Section F

Parts List .....parts.lincolnelectric.com

Content/details may be changed or updated without notice. For most current Instruction Manuals, go to parts.lincolnelectric.com.

TECHNICAL SPECIFICATIONS - VANTAGE® 300 (K2409-7)

INPUT - DIESEL ENGINE

Make/Model	Description	Horsepower @ 1800 RPM	Operating Speed (RPM)	Displacement cu. in. (ltrs.) Bore x Stroke inch (mm)	Starting Systems	Capacities
K2409-7 **Kubota*** V1505	4 Cylinder naturally aspirated Water Cooled Diesel Engine	22 HP	**High** 1890 RPM **Full Load** 1800 RPM **Low Idle** 1350 RPM	91.41(1.5) 3.07 x 3.09 (78 x 78)	12VDC Battery and starter (Group 34; Battery 535 cold crank amps) Battery Charger	Fuel: 20gal.(75.7L) Oil: 6.4qts.(6.0L) Radiator Coolant: 7.2qts.(6.8L)

RATED OUTPUT @ 104° F (40° C) - WELDER

Welding Process	Welding Output Current/Voltage/Duty Cycle	Output Range	Max. Weld OCV @Rated Load RPM
DC Constant Current	300A / 32V / 100% 350A / 28V / 100% 400A / 20V / 40%	30 TO 400 AMPS	60 Volts(2)
DC Pipe Current	300A / 32V / 100%	40 TO 300 AMPS	
Touch-Start™TIG	250A / 30V / 100%	20 TO 250 AMPS	
DC Constant Voltage	300A / 32V / 100% 350A / 28V / 100%	14 TO 32 VOLTS	
Arc Gouging	300A / 32V / 100%	90 to 300 AMPS	

RATED OUTPUT @ 104° F (40° C) - GENERATOR

Auxiliary Power (1)
60 Hz 220 Volt, 16A, Single Phase 12,500 Watts Peak, /11,000 Watts Continuous, 60 Hz, 380 Volt, 16A, 3-Phase

PHYSICAL DIMENSIONS

HEIGHT	WIDTH	DEPTH	WEIGHT
35.94** in. 913 mm	25.30 in 643 mm	60.00 in. 1524 mm	1035 lbs. (469kg.)

LIFT BAIL WEIGHT RATING 2300 LBS. (1043KG.) MAXIMUM

ENGINE

LUBRICATION	EMISSIONS	FUEL SYSTEM	GOVERNOR
Full Pressure with Full Flow Filter	EPA Tier 4 Interim Compliant	Mechanical Fuel Pump, Auto air bleed system Electric shutoff solenoid Indirect fuel injector	Mechanical Electronic

AIR CLEANER	ENGINE IDLER	MUFFLER	ENGINE PROTECTION
Single Element	Automatic Idler	Low noise Muffler: Top outlet can be rotated. Made from long life, aluminized steel.	Shutdown on low oil pressure & high engine coolant temperature

ENGINE WARRANTY: 2 year complete (parts and labor) 3rd. year major components (parts and labor)

(1) Output rating in watts is equivalent to volt-amperes at unity power factor. Output voltage is within ± 10% at all loads up to rated capacity. When welding, available auxiliary power will be reduced.

* Engine warranty may vary outside of the USA. (See Engine warranty for details).

** To Top of enclosure, add 7.88”(200.2mm) to top of exhaust pipe. Add 4.012”(101.9mm) to top of Lift Bail.

(2) Reduced to less than 30V in the stick mode when VRD (Voltage Reduction Devise) is on.

MACHINE SPECIFICATIONS		
RECEPTACLES	**AUXILIARY POWER CIRCUIT BREAKER**	**OTHER CIRCUIT BREAKERS**
(1) 220V Euro Style (1) 380V Euro Style	(1) 16Amp for Single Phase and 3-Phase (3-pole)	10AMP for Engine Battery Charging Circuit 10AMP for 42V Wire Feeder Power

SAFETY PRECAUTIONS

⚠ WARNING

Do not attempt to use this equipment until you have thoroughly read the engine manufacturer's manual supplied with your welder. It includes important safety precautions, detailed engine starting, operating and maintenance instructions, and parts lists.

ELECTRIC SHOCK can kill.
- **Do not touch electrically live parts or electrode with skin or wet clothing.**
- **Insulate yourself from work and ground**
- **Always wear dry insulating gloves.**

ENGINE EXHAUST can kill.
- **Use in open, well ventilated areas or vent exhaust outside.**

MOVING PARTS can injure.
- **Do not operate with doors open or guards off.**
- **Stop engine before servicing.**
- **Keep away from moving parts.**

See additional warning information at front of this operator's manual.

Only qualified personnel should install, use, or service this equipment.

VRD (VOLTAGE REDUCTION DEVICE)

The VRD feature provides additional safety in the CC-Stick mode especially in an environment with a higher risk of electric shock such as wet areas and hot humid sweaty conditions.

The VRD reduces the OCV (Open Circuit Voltage) at the welding output terminals while not welding to less than 13V DC when the resistance of the output circuit is above 200Ω (ohms).

The VRD requires that the welding cable connections be kept in good electrical condition because poor connections will contribute to poor starting. Having good electrical connections also limits the possibility of other safety issues such as heat-generated damage, burns and fires.

The machine is shipped with the VRD switch in the "Off" position. To turn it "On" or "Off".
- Turn the engine "Off".
- Disconnect the negative battery cable.
- Lower the control panel by removing 4 front panel screws. (See Figure A.1)
- Place the VRD switch in the "On" or "Off" position. (See Figure A.1)

With the VRD switch in the "On" position, the VRD lights are enabled.

FIGURE A.1

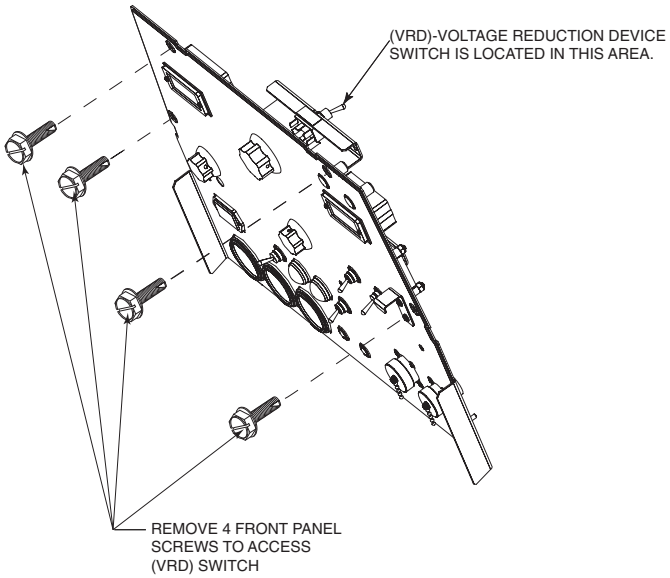

LOCATION AND VENTILATION

The welder should be located to provide an unrestricted flow of clean, cool air to the cooling air inlets and to avoid restricting the cooling air outlets. Also, locate the welder so that the engine exhaust fumes are properly vented to an outside area.

STACKING

VANTAGE® 300 machines cannot be stacked.

ANGLE OF OPERATION

Engines are designed to run in the level condition which is where the optimum performance is achieved. The maximum angle of continuous operation is 20 degrees in all directions, 30 degrees Intermittent (less than 10 minutes continuous) in all directions. If the engine is to be operated at an angle, provisions must be made for checking and maintaining the oil level at the normal (FULL) oil capacity in the crankcase.

When operating the welder at an angle, the effective fuel capacity will be slightly less than the amount specified.

LIFTING

The VANTAGE® 300 weighs approximately 1190 lbs. (540kg.) with a full tank of fuel (1035 lbs. (470kg.) less fuel). A lift bail is mounted to the machine and should always be used when lifting the machine.

⚠ WARNING

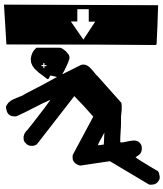

- **Lift only with equipment of adequate lifting capacity.**
- **Be sure machine is stable when lifting.**
- **Do not lift this machine using lift bail if it is equipped with a heavy accessory such as trailer or gas cylinder.**
- **Do not lift machine if lift bail is damaged.**
- **Do not operate machine while suspended from lift bail.**

FALLING EQUIPMENT can cause injury.

HIGH ALTITUDE OPERATION

At higher altitudes, output derating may be necessary. For maximum rating, derate the machine 2.5% to 3.5% for every 1000 ft. (305m). Due to new EPA and other local emissions regulations, modifications to the engine for high altitude are restricted within the United States. For use above 6000 ft.(1828 m) an authorized engine field service shop should be contacted to determine if any adjustments can be made for operation in higher elevations.

HIGH TEMPERATURE OPERATION

At temperatures above 104°F (40°C), Welder output derating is necessary. For maximum output ratings, derate the welder output 2 volts for every 18°F (10°C) above 104°F (40°C).

COLD WEATHER STARTING:

With a fully charged battery and the proper oil, the engine should start satisfactorily down to 5°F (-15°C). If the engine must be frequently started at or below 23°F (-5°C), it may be desirable to install cold-starting aides. The use of No. 1D diesel fuel is recommended in place of No. 2D at temperatures below 23°F (-5°C). Allow the engine to warm up before applying a load or switching to high idle.

Note: Extreme cold weather starting may require longer glow plug operation.

⚠ WARNING

Under no conditions should ether or other starting fluids be used with this engine!

TOWING

Use a recommended trailer for use with this equipment for road, in-plant and yard towing by a vehicle(1). If the user adapts a non-Lincoln trailer, he must assume responsibility that the method of attachment and usage does not result in a safety hazard or damage the welding equipment. Some of the factors to be considered are as follows:

1. Design capacity of trailer vs. weight of Lincoln equipment and likely additional attachments.
2. Proper support of, and attachment to, the base of the welding equipment so there will be no undue stress to the framework.
3. Proper placement of the equipment on the trailer to insure stability side to side and front to back when being moved and when standing by itself while being operated or serviced.
4. Typical conditions of use, i.e., travel speed; roughness of surface on which the trailer will be operated; environmental conditions; like maintenance.
5. Conformance with federal, state and local laws.(1)

(1) Consult applicable federal, state and local laws regarding specific requirements for use on public highways.

VEHICLE MOUNTING

⚠ WARNING

Improperly mounted concentrated loads may cause unstable vehicle handling and tires or other components to fail.

- **Only transport this Equipment on serviceable vehicles which are rated and designed for such loads.**
- **Distribute, balance and secure loads so vehicle is stable under conditions of use.**
- **Do not exceed maximum rated loads for components such as suspension, axles and tires.**
- **Mount equipment base to metal bed or frame of vehicle.**
- **Follow vehicle manufacturer's instructions.**

PRE-OPERATION ENGINE SERVICE

READ the engine operating and maintenance instructions supplied with this machine.

⚠ WARNING

- **Stop engine and allow to cool before fueling**
- **Do not smoke when fueling.**
- **Fill fuel tank at a moderate rate and do not overfill.**
- **Wipe up spilled fuel and allow fumes to clear before starting engine.**
- **Keep sparks and flame away from tank.**

OIL

The VANTAGE® 300 is shipped with the engine crankcase filled with high quality SAE 10W-30 Oil that meets classification CG-4 or CH-4 for diesel engines. Check the oil level before starting the engine. If it is not up to the full mark on the dip stick, add oil as required. Check the oil level every four hours of running time during the first 50 running hours. Refer to the engine Operator's Manual for specific oil recommendations and break-in information. The oil change interval is dependent on the quality of the oil and the operating environment. Refer to the Engine Operator's Manual for more details on the proper service and maintenance intervals.

FUEL

DIESEL FUEL ONLY-Low sulphur fuel or ultra low sulphur fuel in U.S.A. and Canada.

⚠ WARNING

- **Fill the fuel tank with clean, fresh fuel. The capacity of the tank is 20 gals. (75.7 ltrs). When the fuel gauge reads empty the tank contains approximately 2 gals. (7.6ltrs.) of reserve fuel.**

⚠ WARNING

NOTE: The fuel shut off valve should be in the closed position when the welder is not used for extended periods of time.

ENGINE COOLING SYSTEM

⚠ WARNING

Air to cool the engine is drawn in the side and exhausted through radiator & case back. It is important that the intake and exhaust air is not restricted. Allow a minimum clearance of 1ft. (0.6m) from the case back and 16in.(406mm) from either side of the base to a vertical surface.

BATTERY CONNECTION

⚠ CAUTION

Use caution as the electrolyte is a strong acid that can burn skin and damage eyes.

The VANTAGE® 300 is shipped with the negative battery cable disconnected. Make certain that the RUN-STOP switch is in the STOP position. Remove the two screws from the battery tray using a screwdriver or a 3/8" socket. Attach the negative battery cable to the negative battery terminal and tighten using a 1/2" socket or wrench.

NOTE: This machine is furnished with a wet charged battery; if unused for several months, the battery may require a booster charge. Be careful to charge the battery with the correct polarity. (See Battery in "Maintenance Section")

MUFFLER OUTLET PIPE

Using the clamp provided secure the outlet pipe to the outlet tube with the pipe positioned such that it will direct the exhaust in the desired direction. Tighten using a 9/16" socket or wrench.

SPARK ARRESTER

Some federal, state or local laws may require that gasoline or diesel engines be equipped with exhaust spark arresters when they are operated in certain locations where unarrested sparks may present a fire hazard. The standard muffler included with this welder does not qualify as a spark arrester. When required by local regulations, a suitable spark arrester, such as the K1898-1 must be installed and properly maintained.

⚠ WARNING

An incorrect spark arrestor may lead to damage to the engine or adversely affect performance.

REMOTE CONTROL

The VANTAGE® 300 is equipped with a 6-pin and a 14-pin connector. When in the Arc Gouging or CV-WIRE modes and when a remote control is connected to the 6-pin Connector, the auto-sensing circuit automatically switches the OUTPUT control from control at the welder to remote control.

When in TOUCH START TIG mode and when a Amptrol is connected to the 6-Pin Connector, the OUTPUT dial is used to set the maximum current range of the CURRENT CONTROL of the Amptrol.

When in the CC-STICK or DOWNHILL PIPE mode and when a remote control is connected to the 6-Pin or 14-Pin connector, the output control is used to set the maximum current range of the remote.

EXAMPLE: When the OUTPUT CONTROL on the welder is set to 200 amps the current range on the remote control will be Min.-200 amps, rather than the full Min.-Max. amps. Any current range that is less than the full range provides finer current resolution for more fine tuning of the output.

The 14-pin connector is used to directly connect a wire feeder control cable. In the CV-WIRE mode, if the feeder being used has a voltage control when the wire feeder control cable is connected to the 14-Pin Connector, the auto-sensing circuit automatically makes OUTPUT CONTROL inactive and the wire feeder voltage control active. Otherwise, the OUTPUT CONTROL is used to preset the voltage.

⚠ WARNING

NOTE: When a wire feeder with a built in welding voltage control is connected to the 14-pin connector, do not connect anything to the 6-pin connector.

ELECTRICAL CONNECTIONS

MACHINE GROUNDING

Because this portable engine driven welder creates its own power, it is not necessary to connect its frame to an earth ground, unless the machine is connected to premises wiring (home, shop, etc.)

To prevent dangerous electric shock, other equipment to which this engine driven welder supplies power must:

⚠ WARNING

- **Be grounded to the frame of the welder using a grounded type plug.**
- **Be double insulated.**
- **Do not ground the machine to a pipe that carries explosive or combustible material.**

When this welder is mounted on a truck or trailer, its frame must be electrically bonded to the metal frame of the vehicle. Use a #8 or larger copper wire connected between the machine grounding stud and the frame of the vehicle. When this engine driven welder is connected to premises wiring such as that in a home or shop, its frame must be connected to the system earth ground. See further connection instructions in the section entitled "Standby Power Connections" as well as the article on grounding in the latest National Electrical Code and the local code.

In general, if the machine is to be grounded, it should be connected with a #8 or larger copper wire to a solid earth ground such as a metal water pipe going into the ground for at least ten feet and having no insulated joints, or to the metal framework of a building which has been effectively grounded.

The National Electrical Code lists a number of alternate means of grounding electrical equipment. A machine grounding stud marked with the symbol ⏚ is provided on the front of the welder.

WELDING TERMINALS

The VANTAGE® 300 is equipped with a toggle switch for selecting "hot" welding terminal when in the "WELD TERMINALS ON" position or "cold" welding terminal when in the "REMOTELY CONTROLLED" position.

WELDING OUTPUT CABLES

With the engine off connect the electrode and work cables to the output studs. The welding process dictates the polarity of the electrode cable. These connections should be checked periodically and tightened with a 3/4" wrench.

Table A.1 lists recommended cable sizes and lengths for rated current and duty cycle. Length refers to the distance from the welder to the work and back to the welder. Cable diameters are increased for long cable lengths to reduce voltage drops.

TABLE A.1

TOTAL COMBINED LENGTH OF ELECTRODE AND WORK CABLES	
Cable Length	**Cable Size for 400 Amps 60% Duty Cycle**
0-100 Ft. (0-30 meters)	**2 / 0 AWG**
100-150 Ft. (30-46 meters)	**2 / 0 AWG**
150-200 Ft. (46-61 meters)	**3 / 0 AWG**

CABLE INSTALLATION

Install the welding cables to your VANTAGE® 300 as follows.

1. The engine must be OFF to install welding cables.
2. Remove the flanged nuts from the output terminals
3. Connect the electrode holder and work cables to the weld output terminals. The terminals are identified on the case front.
4. Tighten the flanged nuts securely.
5. Be certain that the metal piece you are welding (the “work”) is properly connected to the work clamp and cable.
6. Check and tighten the connections periodically.

⚠ CAUTION

- **Loose connections will cause the output terminals to overheat. The terminals may eventually melt.**
- **Do not cross the welding cables at the output terminal connection. Keep the cables isolated and separate from one another.**

AUXILIARY POWER

The auxiliary power capacity is 10,500 watts Peak, 14,500 Watts Continuous of 60 Hz, single phase power. The auxiliary power capacity rating in watts is equivalent to volt-amperes at unity power factor. The max permissible current of the 380 VAC output is 16 amps. Output voltage is within ± 10% at all loads up to rated capacity.

Single phase power is:
- 3,500 Watts Peak / 3,500 Watts Continuous, 60 Hz 220 Volts 1-Phase (Euro).

STANDBY POWER CONNECTIONS

The machine is suitable for temporary, standby or emergency power using the engine manufacturer’s recommended maintenance schedule.

The machine can be permanently installed as a standby power unit for 380 VAC, three phase, 16 amp service.

Connections must be made by a licensed electrician who can determine how the power can be adapted to the particular installation and comply with all applicable electrical codes.

- Take necessary steps to assure load is limited to the capacity of the VANTAGE® 300.

CONNECTION OF LINCOLN ELECTRIC WIRE FEEDERS

Connection of LN-7 or LN-8 to the VANTAGE® 300

1. **Shut the welder off.**

2. Connect the LN-7 or LN-8 per instructions on the appropriate connection diagram in Section F.

3. Set the "WIRE FEEDER VOLTMETER" switch to either "+" or "-" as required by the electrode being used.

4. Set the "MODE" switch to the "CV WIRE " position.
5. Set the "ARC CONTROL" knob to "0" initially and adjust to suit.

6. Set the "WELD TERMINALS" switch to the "REMOTELY CONTROLLED" position.

7. Set the "IDLE" switch to the "HIGH" position.

Connection of LN-15 to the VANTAGE® 300

1. **Shut the welder off.**

2. For electrode Positive, connect the electrode cable to the "+" terminal of the welder and work cable to the "-" terminal of the welder. For electrode Negative, connect the electrode cable to the "-" terminal of the welder and work cable to the "+" terminal of the welder.

3. **Across The-Arc Model:**

   - Attach the single lead from the front of the LN-15 to work using the spring clip at the end of the lead. This is a control lead to supply current to the wire feeder motor; it does not carry welding current.

   - Set the "WELD TERMINALS" switch to "WELD TERMINALS ON".

   - When the gun trigger is closed, the current sensing circuit will cause the VANTAGE® 300 engine to go to the high idle speed, the wire will begin to feed and the welding process started. When welding is stopped, the engine will revert to low idle speed after approximately 12 seconds unless welding is resumed.

4. **Control Cable Model:**

   - Connect Control Cable between Engine Welder and Feeder.

   - Set the "WELD TERMINALS" switch to "REMOTELY CONTROLLED"

5. Set the MODE switch to the "CV-WIRE " position.

6. Set the "WIRE FEEDER VOLTMETER" switch to either "+" or "-" as required by the electrode polarity being used.

7. Set the "ARC CONTROL" knob to "0" initially and adjust to suit.

8. Set the "IDLE" switch to the "AUTO" position.

9. When the gun trigger is closed, the current sensing circuit will cause the VANTAGE® 300 engine to go to the high idle speed, the wire will begin to feed and the welding process started. When welding is stopped, the engine will revert to low idle speed after approximately 12 seconds unless welding is resumed.

⚠ WARNING

Connection of the LN-25 to the VANTAGE® 300
Shut off welder before making any electrical connections.

The LN-25 with or without an internal contactor may be used with the VANTAGE® 300. See the appropriate connection diagram in Section F.

NOTE: The LN-25 (K431) Remote Control Module and (K432) Remote Cable are not recommended for use with the VANTAGE® 300.

1. **Shut the welder off.**

2. For electrode Positive, connect the electrode cable from the LN-25 to the "+" terminal of the welder and work cable to the "-" terminal of the welder. For electrode Negative, connect the electrode cable from the LN-25 to the "-" terminal of the welder and work cable to the "+" terminal of the welder.

3. Attach the single lead from the front of the LN-25 to work using the spring clip at the end of the lead. This is a control lead to supply current to the wire feeder motor; it does not carry welding current.

4. Set the MODE switch to the "CV-WIRE " position.

5. Set the "WELD TERMINALS" switch to "WELD TERMINALS ON"

6. Set the "ARC CONTROL" knob to "0" initially and adjust to suit.

7. Set the "IDLE" switch to the "AUTO" position. When not welding, the VANTAGE® 300 engine will be at the low idle speed. If you are using an LN-25 with an internal contactor, the electrode is not energized until the gun trigger is closed.

8. When the gun trigger is closed, the current sensing circuit will cause the VANTAGE® 300 engine to go to the high idle speed, the wire will begin to feed and the welding process started. When welding is stopped, the engine will revert to low idle speed after approximately 12 seconds unless welding is resumed.

⚠ CAUTION

If you are using an LN-25 without an internal contactor, the electrode will be energized when the VANTAGE® 300 is started.

Spool Gun (K487-25) and Cobramatic to VANTAGE® 300

- **Shut the welder off.**

- Connect per instructions on the appropriate connection diagram in Section F.

SAFETY PRECAUTIONS

⚠ WARNING

Do not attempt to use this equipment until you have thoroughly read the engine manufacturer's manual supplied with your welder. It includes important safety precautions, detailed engine starting, operating and maintenance instructions, and parts lists.

ELECTRIC SHOCK can kill.

- **Do not touch electrically live parts or electrode with skin or wet clothing.**
- **Insulate yourself from work and ground**
- **Always wear dry insulating gloves.**

- **Always operate the welder with the hinged door closed and the side panels in place.**

- **Read carefully the Safety Precautions page before operating this machine. Always follow these and any other safety procedures included in this manual and in the Engine Instruction Manual.**

GENERAL DESCRIPTION

The VANTAGE® 300 is a diesel engine powered DC multi-process welding power source and 300 / 220 volt AC power generator. The engine drives a generator that supplies three phase power for the DC welding circuit, single phase and Three Phase power for the AC auxiliary outlets. The DC welding control system uses state of the art Chopper Technology (CT™) for superior welding performance.

The VANTAGE® 300 is fitted with a selectable VRD(Voltage Reduction Device). The VRD operates in the CC-Stick mode reducing the OCV to <13 volts, increasing operator safety when welding is performed in environments with increased hazard of electric shock such as wet areas and hot, humid sweaty conditions.

FOR AUXILIARY POWER:

Start the engine and set the IDLER control switch to the desired operating mode. Full power is available regardless of the welding control settings providing no welding current is being drawn.

ENGINE OPERATION

Before Starting the Engine:

- Be sure the machine is on a level surface.
- Open side engine door and remove the engine oil dipstick and wipe it with a clean cloth. Reinsert the dipstick and check the level on the dipstick.
- Add oil (if necessary) to bring the level up to the full mark. Do not overfill. Close engine door.
- Check radiator for proper coolant level. (Fill if necessary).
- See Engine Owner's Manual for specific oil and coolant recommendations.

⚠ WARNING

ADD FUEL

- **Stop engine while fueling.**
- **Do not smoke when fueling.**
- **Keep sparks and flame away from tank.**
- **Do not leave unattended while fueling.**
- **Wipe up spilled fuel and allow fumes to clear before starting engine.**
- **Do not overfill tank, fuel expansion may cause overflow.**

DIESEL FUEL can cause fire.

DIESEL FUEL ONLY-Low sulphur fuel or ultra low sulphur fuel in U.S.A. and Canada.

- Remove the fuel tank cap.

- Fill the tank. DO NOT FILL THE TANK TO THE POINT OF OVERFLOW.

- Replace the fuel cap and tighten securely.

- See Engine Owner's Manual for specific fuel recommendations.

BREAK-IN PERIOD

The engine will use a small amount of oil during its "break-in" period. The break-in period is about 50 running hours. Check the oil every four hours during break-in.

⚠ CAUTION

During break-in, subject the Welder to moderate loads. Avoid long periods running at idle. Before stopping the engine, remove all loads and allow the engine to cool several minutes.

FIGURE B.1

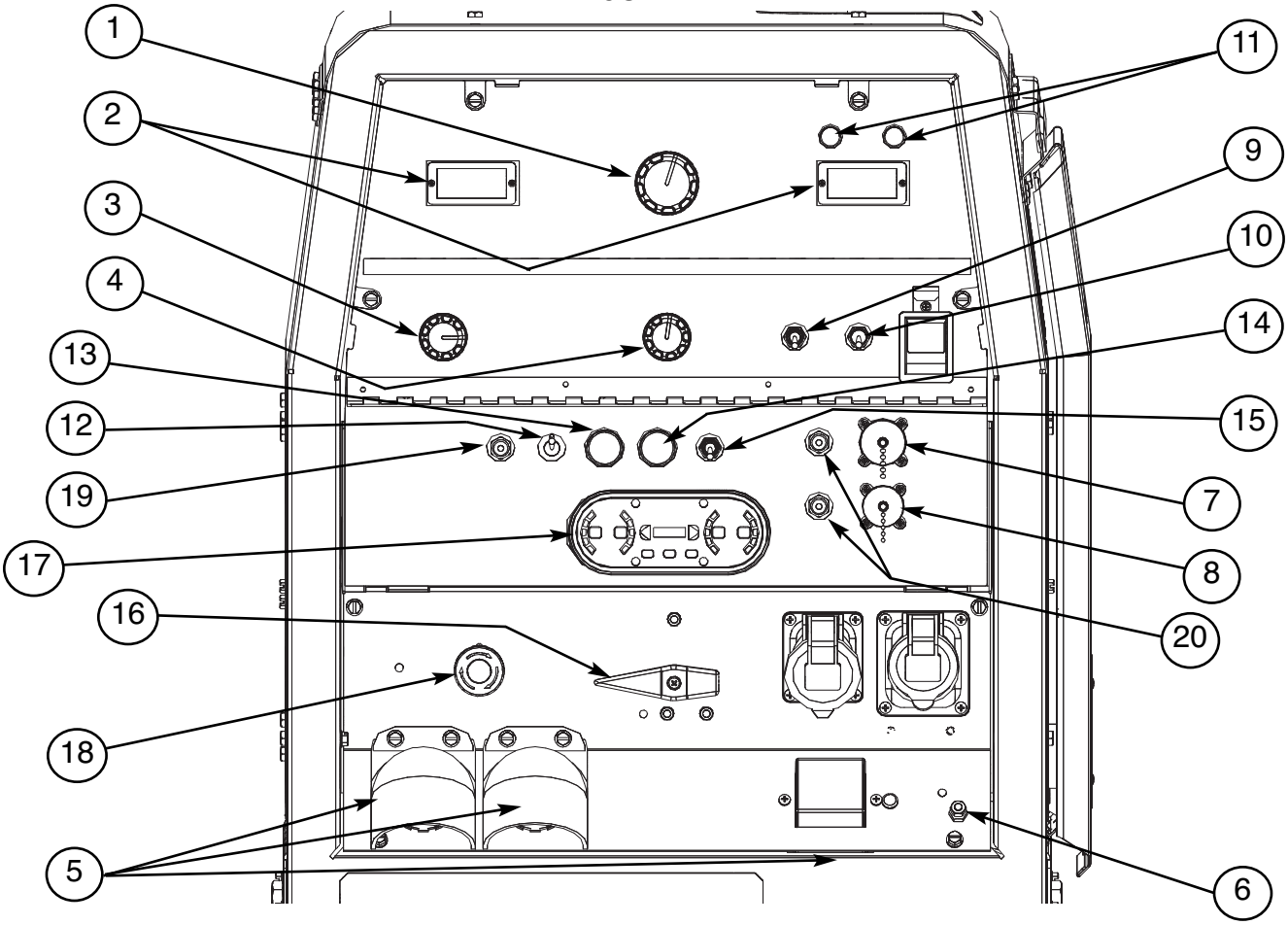

WELDING CONTROLS (Figure B.1)

1. OUTPUT CONTROL- The OUTPUT dial is used to preset the output voltage or current as displayed on the digital meters for the five welding modes. When in the ARC GOUGING or CV-WIRE modes and when a remote control is connected to the 6-Pin or 14-Pin Connector, the auto-sensing circuit automatically switches the OUTPUT CONTROL from control at the welder to the remote control.

When in the CC-STICK or DOWNHILL PIPE mode and when a remote control is connected to the 6-Pin or 14-Pin connector, the output control is used to set the maximum current range of the remote.

EXAMPLE: When the OUTPUT CONTROL on the welder is set to 200 amps the current range on the remote control will be Min.-200 amps, rather than the full Min.-Max. amps. Any current range that is less than the full range provides finer current resolution for more fine tuning of the output.

In the CV-WIRE mode, if the feeder being used has a voltage control when the wire feeder control cable is connected to the 14-Pin Connector, the auto-sensing circuit automatically makes OUTPUT CONTROL inactive and the wire feeder voltage control active. Otherwise, the OUTPUT CONTROL is used to preset the voltage.

When in the TOUCH START TIG mode and when an Amptrol is connected to the 6-Pin Connector, the OUTPUT dial is used to set the maximum current range of the CURRENT CONTROL of the Amptrol.

2. DIGITAL OUTPUT METERS-The digital meters allow the output voltage (CV-WIRE mode) or current (CC-STICK,DOWN HILL PIPE and TIG modes) to be set prior to welding using the OUTPUT control dial. During welding, the meter display the actual output voltage (VOLTS) and current (AMPS). A memory feature holds the display of both meters on for seven seconds after welding is stopped. This allows the operator to read the actual current and voltage just prior to when welding was ceased.

While the display is being held the left-most decimal point in each display will be flashing. The accuracy of the meters is +/- 3%.

3. WELD MODE SELECTOR SWITCH-

(Provides Five selectable welding modes)

CV-WIRE
ARC GOUGING
DOWNHILL PIPE
CC-STICK
TOUCH START TIG

4. ARC CONTROL- The ARC CONTROL dial is active in the CV-WIRE, CC-STICK and DOWNHILL PIPE modes, and has different functions in these modes. This control is not active in the TIG mode.

CC-STICK mode: In this mode, the ARC CONTROL dial sets the short circuit current (arc-force) during stick welding to adjust for a soft or crisp arc. Increasing the dial from –10 (soft) to +10 (crisp) increases the short circuit current and prevents sticking of the electrode to the plate while welding. This can also increase spatter. It is recommended that the ARC CONTROL be set to the minimum number without electrode sticking. Start with a setting at 0.

DOWNHILL PIPE mode: In this mode, the ARC CONTROL dial sets the short circuit current (arc-force) during stick welding to adjust for a soft or a more forceful digging arc (crisp). Increasing the number from –10 (soft) to +10 (crisp) increases the short circuit current which results in a more forceful digging arc. Typically a forceful digging arc is preferred for root and hot passes. A softer arc is preferred for fill and cap passes where weld puddle control and deposition ("stacking" of iron) are key to fast travel speeds. It is recommended that the ARC CONTROL be set initially at 0.

CV-WIRE mode: In this mode, turning the ARC CONTROL clock wise from –10 (soft) to +10 (crisp) changes the arc from soft and washed-in to crisp and narrow. It acts as an inductance/pinch control. The proper setting depends on the procedure and operator preference. Start with a setting of 0.

5. POLARITY SWITCH- Select, ELECTRODE (+) or ELECTRODE (-).

6. WIRE FEEDER VOLTMETER SWITCH- Matches the polarity of the wire feeder voltmeter to the polarity of the electrode.

7. 14-PIN CONNECTOR- For attaching wire feeder control cables. Includes contactor closure circuit, auto-sensing remote control circuit, and 120V and 42V power. The remote control circuit operates the same as the 6 Pin Amphenol.

8. 6-PIN CONNECTOR- For attaching optional remote control equipment. Includes auto-sensing remote control circuit.

9. WELD TERMINALS CONTROL SWITCH- In the WELD TERMINALS ON position, the output is electrically hot all the time. In the REMOTELY CONTROLLED position, the output is controlled by a wire feeder or amptrol device, and is electrically off until a remote switch is depressed.

10. WIRE FEEDER VOLTMETER SWITCH: Matches the polarity of the wire feeder voltmeter to the polarity of the electrode.

11. VRD (Voltage Reduction Device) INDICATOR LIGHTS- On the front panel of the Vantage 300 are two indicator lights. A red light when lit indicates OCV(Open Circuit Voltage) is equal to or greater than 30V and a green light when lit indicates OCV(Open Circuit Voltage) is less than 30V.

The VRD “On/Off” switch inside the control panel must be “On” for the VRD function to be active and the lights to be enabled. When the machine is first started with VRD enabled, both lights will illuminate for 5 seconds.

These lights monitor the OCV(Open Circuit Voltage) and weld voltage at all times. In the CC-Stick mode when not welding the green light will illuminate indicating that the VRD has reduced the OCV to less than 30V. During welding the red light will illuminate whenever the arc voltage is equal to or greater than 30V. This means that the red and green light may alternate depending on the weld voltage. This is normal operation.

If the red light remains illuminated when not welding in the CC-stick mode, the VRD is not functioning properly. Please refer to your local field service shop for service.

If the VRD is turned “On” and the lights don’t come “On”, refer to the trouble shooting section.

TABLE B.1

VRD INDICATOR LIGHTS			
MODE		VRD "ON"	VRD "OFF"
CC-STICK	OCV	Green (OCV Reduced)	No Lights
	While Welding	Red or Green (Depends on Weld Voltage) *	
CV-WIRE	OCV	Red (OCV Not Reduced) Weld Terminals On	
		Red (OCV Not Reduced) Weld Terminals Remotely Controlled Gun Trigger Closed	
		Green (No OCV) Weld Terminals Remotely Controlled Gun Trigger Open	
	While Welding	Red or Green (Depends on Weld Voltage) *	
PIPE	OCV	Green (No Output)	
	While Welding	Not Applicable (No Output)	
ARC GOUGING	OCV	Green (No Output)	
	While Welding	Not Applicable (No Output)	
TIG	OCV	Green (Process is Low Voltage)	
	While Welding	Green (Process is Low Voltage)	

* It is normal for the lights to alternate between colors while welding.

ENGINE CONTROLS:

12. RUN/STOP SWITCH - RUN position energizes the engine prior to starting. STOP position stops the engine. The oil pressure interlock switch prevents battery drain if the switch is left in the RUN position and the engine is not operating.

13. GLOW PLUG PUSH BUTTON -

- When pushed activates the glow plugs. Glow plug should not be activated for more than 20 seconds continuously.

14. START PUSH BUTTON - Energizes the starter motor to crank the engine.

15. IDLER SWITCH- Has two positions as follows:

1) In the HIGH position, the engine runs at the high idle speed controlled by the engine governor.
2) In the AUTO position, the idler operates as follows:

- When switched from HIGH to AUTO or after starting the engine, the engine will operate at full speed for approximately 12 seconds and then go to low idle speed.
- When the electrode touches the work or power is drawn for lights or tools (approximately 100 Watts minimum), the engine accelerates and operates at full speed.
- When welding ceases or the AC power load is turned off, a fixed time delay of approximately 12 seconds starts. If the welding or AC power load is not restarted before the end of the time delay, the idler reduces the engine speed to low idle speed.
- The engine will automatically return to high idle speed when there is welding load or AC power load reapplied.

16. POLARITY SWITCH- Provides two selectable welding polarities: DC+ & DC-.

17. DASHBOARD GAUGE- The dash board gauge displays 5 gauges:

3a. OIL PRESSURE
The gauge displays the engine oil pressure when the engine is running.

3b. ENGINE TEMPERATURE
The gauge displays the engine coolant temperature.

3c. HOUR METER
The hour meter displays the total time that the engine has been running. This meter is a useful indicator for scheduling preventive maintenance.

3d. FUEL LEVEL
Displays the level of diesel fuel in the fuel tank.
The operator must watch the fuel level closely to prevent running out of fuel and possibly having to bleed the system.

3e. BATTERY VOLTAGE INDICATOR
Displays the battery voltage and indicates that the charging system is functioning properly..

18. ENGINE STOP SWITCH- Shuts down engine.

19. CIRCUIT BREAKER- For protection of Battery Charging Circuit.

20. CIRCUIT BREAKER- For protection of 42V & 115V Wire Feeder circuits.

STARTING THE ENGINE

1. Remove all plugs connected to the AC power receptacles.
2. Set IDLER switch to AUTO.
3. Press Glow Plug Button and hold 15 to 20 seconds.
4. Set the RUN/STOP switch to RUN.
5. Press START button until the engine starts or for up to 10 seconds. Continue to hold the glow plug button for up to an additional 10 seconds.
6. Release the engine START button immediately when the engine starts.
7. The engine will run at high idle speed for approximately 12 seconds and then drop to low idle speed. Allow the engine to warm up at low idle for several minutes before applying a load and/or switching to high idle. Allow a longer warm up time in cold weather.

NOTE: If the unit fails to start turn run/stop switch to off and repeat step 3 through step 7 after waiting 30 seconds.

⚠ CAUTION

- **Do not allow the starter motor to run continuously for more than 20 seconds.**
- **Do not push the START button while the engine is running because this can damage the ring gear and/or the starter motor.**
- **IF the Engine Protection or Battery Charging Lights do NOT turn off shortly after starting the engine, shut off the engine immediately and determine the cause.**

NOTE: When starting for the first time, or after and extended period of time of not operating, it will take longer than normal to start because the fuel pump has to fill the fuel system. For best results, bleed the fuel system as indicated in Maintenance Section of this manual.

STOPPING THE ENGINE

Remove all welding and auxiliary power loads and allow the engine to run at low idle speed for a few minutes to cool the engine.

STOP the engine by placing the RUN-STOP switch in the STOP position.

NOTE: A fuel shut off valve is located on the fuel prefilter.

WELDER OPERATION

DUTY CYCLE

Duty Cycle is the percentage of time the load is being applied in a 10 minute period. For example a 60% duty cycle, represents 6 minutes of load and 4 minutes of no load in a 10 minute period.

ELECTRODE INFORMATION

For any electrode the procedures should be kept within the rating of the machine. For information on electrodes and their proper application see (www.lincolnelectric.com) or the appropriate Lincoln publication.

The VANTAGE® 300 can be used with a broad range of DC stick electrodes. The MODE switch provides two stick welding settings as follows:

CONSTANT CURRENT (CC-STICK) WELDING

The CC-STICK position of the MODE switch is designed for horizontal and vertical-up welding with all types of electrodes, especially low hydrogen. The OUTPUT CONTROL dial adjusts the full output range for stick welding.

The ARC CONTROL dial sets the short circuit current (arc-force) during stick welding to adjust for a soft or crisp arc. Increasing the number from -10(soft) to +10(crisp) increases the short circuit current and prevents sticking of the electrode to the plate while welding. This can also increase spatter. It is recommended that the ARC CONTROL be set to the minimum number without electrode sticking. Start with the dial set at 0.

NOTE: Due to the low OCV with the VRD on, a very slight delay during striking of the electrodes may occur. Due to the requirement of the resistance in the circuit to be low for a VRD to operate, a good metal-to-metal contact must be made between the metal core of the electrode and the job.

A poor connection anywhere in the welding output circuit may limit the operation of the VRD. This includes a good connection of the work clamp to the job. The work clamp should be connected as close as practical to where the welding will be performed.

A. For New Electrodes

E6010 - Touch, Lift to Start the Arc
E7018, E7024 - Touch, Rock Back and Forth in Joint, Lift.

Once the arc is started, normal welding technique for the application is then used.

B. For Re-Striking Electrodes

Some electrodes form a cone at the end of the electrode after the welding arc has been broken, particularly iron powder and low hydrogen electrodes. This cone will need to be broken off in order to have the metal core of the electrode make contact.

E6010 - Push, Twist in Joint, Lift.
E7018, E7024 - Push, Rock Back and Forth in Joint, Lift.

TABLE B.2

TYPICAL VANTAGE® 300 FUEL CONSUMPTION

	Kubota V1505 Gal./Hr (Liters/Hr)	Running Time for 20 gallons - (Hours)
Low Idle - No Load 1350 R.P.M. (Kubota)	.29 (1.10)	68.96
High Idle - No Load 1890 R.P.M. (Kubota)	.40 (1.52)	49.76
DC Weld Output 150 Amps @ 20 Volts	.66 (2.50)	30.23
DC Weld Output 250 Amps @ 24 Volts	.87 (3.30)	22.91
DC Weld Output 300 Amps @ 32 Volts	1.17 (4.41)	17.15
10,000 Watts	1.10 (4.15)	18.23
7,500 Watts	.89 (3.36)	22.15
5,000 Watts	.73 (2.75)	27.53
2,500 Watts	.56 (2.14)	35.41

NOTE: This data is for reference only. Fuel consumption is approximate and can be influenced by many factors, including engine maintenance, environmental conditions and fuel quality.

Once the arc is started, normal welding technique for the application is then used.

For other electrodes the above techniques should be tried first and varied as needed to suit operator preference. The goal for successful starting is good metal to metal contact.

For indicator light operation, see Table B.1.

DOWNHILL PIPE Welding

This slope controlled setting is intended for "out-of-position" and "down hill" pipe welding where the operator would like to control the current level by changing the arc length.

The OUTPUT CONTROL dial adjusts the full output range for pipe welding.

The ARC CONTROL dial sets the short circuit current (arc-force) during stick welding to adjust for a soft or more forceful digging arc (crisp). Increasing the number from -10(soft) to +10(crisp) increases the short circuit current which results in a more forceful digging arc.Typically a forceful digging arc is preferred for root and hot passes. A softer arc is preferred for fill and cap passes where weld puddle control and deposition ("stacking" of iron) are key to fast travel speeds. This can also increase spatter.

It is recommended that the ARC CONTROL be set to the minimum number without electrode sticking. Start with the dial set at 0.

NOTE: With the VRD switch in the "ON" position there is no output in the DOWNHILL PIPE mode. For indicator light operation, see Table B.1.

TIG WELDING

The TOUCH START TIG setting of the MODE switch is for DC TIG (Tungsten Inert Gas) welding. To initiate a weld, the OUTPUT CONTROL dial is first set to the desired current and the tungsten is touched to the work. During the time the tungsten is touching the work there is very little voltage or current and, in general, no tungsten contamination. Then, the tungsten is gently lifted off the work in a rocking motion, which establishes the arc.
When in the TOUCH START TIG mode and when a Amptrol is connected to the 6-Pin connector the OUTPUT CONTROL dial is used to set the maximum current range of the current control of the Amptrol.

The ARC CONTROL is not active in the TIG mode. To STOP a weld, simply pull the TIG torch away from the work. When the arc voltage reaches approximately 30 Volts the arc will go out and the machine will reset the current to the Touch Start level.
To reinitiate the arc, retouch the tungsten to the work and lift. Alternatively, the weld can be stopped by releasing the Amptrol or arc start switch.

The VANTAGE® 300 can be used in a wide variety of DC TIG welding applications. In general the 'Touch Start' feature allows contamination free starting without the use of a Hi-frequency unit. If desired, the K930-2 TIG Module can be used with the VANTAGE® 300. The settings are for reference.

TABLE B.3

TYPICAL CURRENT RANGES (1) FOR TUNGSTEN ELECTRODES(2)

Tungsten Electrode Diameter in. (mm)		DCEN (-)	DCEP (+)	Approximate Argon Gas Flow Flow Rate C.F.H. (l /min.)				TIG TORCH Nozzle Size (4), (5)
		1%, 2% Thoriated Tungsten	1%, 2% Thoriated Tungsten	Aluminum		Stainless Steel		
.010	(.25)	2-15	(3)	3-8	(2-4)	3-8	(2-4)	#4, #5, #6
0.020	(.50)	5-20	(3)	5-10	(3-5)	5-10	(3-5)	
0.040	(1.0)	15-80	(3)	5-10	(3-5)	5-10	(3-5)	
1/16	(1.6)	70-150	10-20	5-10	(3-5)	9-13	(4-6)	#5, #6
3/32	(2.4)	150-250	15-30	13-17	(6-8)	11-15	(5-7)	#6, #7, #8
1/8	(3.2)	250-400	25-40	15-23	(7-11)	11-15	(5-7)	
5/32	(4.0)	400-500	40-55	21-25	(10-12)	13-17	(6-8)	#8, #10
3/16	(4.8)	500-750	55-80	23-27	(11-13)	18-22	(8-10)	
1/4	(6.4)	750-1000	80-125	28-32	(13-15)	23-27	(11-13)	

(1) When used with argon gas. The current ranges shown must be reduced when using argon/helium or pure helium shielding gases.
(2) Tungsten electrodes are classified as follows by the American Welding Society (AWS):

Pure	EWP
1% Thoriated	EWTh-1
2% Thoriated	EWTh-2

Though not yet recognized by the AWS, Ceriated Tungsten is now widely accepted as a substitute for 2% Thoriated Tungsten in AC and DC applications.
(3) DCEP is not commonly used in these sizes.
(4) TIG torch nozzle "sizes" are in multiples of 1/16ths of an inch:

# 4 = 1/4 in.	(6 mm)
# 5 = 5/16 in.	(8 mm)
# 6 = 3/8 in.	(10 mm)
# 7 = 7/16 in.	(11 mm)
# 8 = _ in.	(12.5 mm)
#10 = 5/8 in.	(16 mm)

(5) TIG torch nozzles are typically made from alumina ceramic. Special applications may require lava nozzles, which are less prone to breakage, but cannot withstand high temperatures and high duty cycles.

VANTAGE® 300 settings when using the K930-2 TIG Module with an Amptrol or Arc Start Switch:

- Set the MODE Switch to the TOUCH START TIG setting.
- Set the "IDLER" Switch to the "AUTO" position.
- Set the "WELDING TERMINALS" switch to the "REMOTELY CONTROLLED" position. This will keep the "Solid State" contactor open and provide a "cold" electrode until the Amptrol or Arc Start Switch is pressed.

When using the TIG Module, the OUTPUT CONTROL on the VANTAGE® 300 is used to set the maximum range of the CURRENT CONTROL on the TIG Module or an Amptrol if connected to the TIG Module.

WIRE WELDING-CV

Connect a wire feeder to the VANTAGE® 300 according to the instructions in INSTALLATION INSTRUCTIONS Section.

The VANTAGE® 300 in the CV-WIRE mode, permits it to be used with a broad range of flux cored wire (Innershield and Outershield) electrodes and solid wires for MIG welding (gas metal arc welding). Welding can be finely tuned using the ARC CONTROL. Turning the ARC CONTROL clockwise from –10 (soft) to +10 (crisp) changes the arc from soft and washed-in to crisp and narrow. It acts as an inductance/pinch control. The proper setting depends on the procedure and operator preference. Start with the dial set at 0.

NOTE: In the CV-Mode with VRD "On", the OCV(Open Circuit Voltage) is not reduced. For indicator light operation, see table B.1.

ARC GOUGING

The VANTAGE 300 can be used for arc gouging. For optimal performance, set the MODE switch to ARC GOUGING.

Set the OUTPUT CONTROL knob to adjust output current to the desired level for the gouging electrode being used according to the ratings in the following Table B.4.

TABLE B.4

Carbon Diameter	Current Range (DC, electrode positive)
1/8"	60-90 Amps
5/32"	90-150 Amps
3/16"	200-250 Amps
1/4"	300-MAX Amps

The ARC CONTROL is not active in the ARC GOUGING Mode. The ARC CONTROL is automatically set to maximum when the ARC GOUGING mode is selected which provides the best ARC GOUGING performance.

NOTE: With the VRD switch in the "ON" position there is no output in the Arc Gouging Mode. For indicator light operation, see Table B.1.

AUXILIARY POWER:

Start the engine and set the IDLER control switch to the desired operating mode. Full power is available regardless of the welding control settings providing no welding current is being drawn.

Simultaneous Welding and Auxiliary Power Loads

The auxiliary power ratings are with no welding load. Simultaneous welding and power loads are specified in the following table. The permissible currents shown assume that current is being drawn from either the 220 VAC or 380 VAC supply (not both at the same time).

VANTAGE® 300 Simultaneous Welding and Power Loads

Weld		1 PHASE			3 PHASE			BOTH 1 & 3 PHASE	
Amps		WATTS	AMPS		WATTS	AMPS		WATTS	AMPS
0		3500	16		10,000	16		10,000	-
100		3500	16		8500	13		8300	-
200	PLUS	3500	16	OR	5700	9	OR	5300	-
250		3500	16		3500	5		3500	-
300		400	2		0	0		400	-
400		0	0		0	0		0	0

VANTAGE® 300 Extension Cord Length Recommendations

(Use the shortest length extension cord possible sized per the following table.)

Current (Amps)	Voltage Volts	Load (Watts)	Maximum Allowable Cord Length in ft. (m) for Conductor Size											
			14 AWG		12 AWG		10 AWG		8 AWG		6 AWG		4 AWG	
16	220/380	1800	30	(9)	40	(12)	75	(23)	125	(38)	175	(53)	300	(91)
Conductor size is based on maximum 2.0% voltage drop.														

FIELD INSTALLED OPTIONS / ACCESSORIES

K2641-2 FOUR WHEELED STEERABLE YARD TRAILER
For in plant and yard towing. Comes standard with a Duo-Hitch™, a 2" Ball and Lunette Eye combination Hitch.

K2636-1 TRAILER - Two-wheeled trailer with optional fender and light package. For highway use, consult applicable federal, state, and local laws regarding possible additional requirements. Comes standard with a Duo-Hitch™, a 2" Ball and Lunette Eye combination hitch. **Order:**
K2636-1 Trailer
K2639-1 Fender & Light Kit
K2640-1 Cable Storage Rack

K1898-1 SPARK ARRESTOR - Easily mounts to standard muffler.

K704 ACCESSORY SET - Includes 35 ft. (10m) of electrode cable and 30 ft. (9.1m) of work cable, headshield, work clamp electrode holder. Cables are rated at 400 amps, 100% duty cycle.

K857 25 ft (7.6m) or **K857-1** 100 ft. (30.4m) **REMOTE CONTROL**
Portable control provides same dial range as the output control on the welder. Has a convenient 6 pin plug for easy connection to the welder.

K2467-1 - Digital weld meters kit with easy to read digital meters for volts and amps. Easy to install.

K802N POWER PLUG KIT
Provides four 120 volt plugs rated at 20 amps each and one dual voltage, full KVA plug rated at 120/240 volts, 50 amps.

K802R POWER PLUG KIT
Provides four 120 volt plugs rated at 15 amps each and one dual voltage, full KVA plug rated at 120/240 volts, 50 amps.

T12153-9 50 AMP, 120/240V POWER PLUG (1-Phase)
T12153-10 50 AMP, 240V POWER PLUG (3-Phase)

K1816-1 FULL KVA ADAPTER KIT
Plugs into the 120/240V NEMA 14-50R receptacle on the case front (which accepts 4-prong plugs) and converts it to a NEMA 6-50R receptacle, (which accepts 3-prong plugs.) For connection of Lincoln equipment with NEMA 6-50 Plug.

WIRE FEEDER OPTIONS

K2613-1 LN-25 PRO PORTABLE WIRE FEEDER-The MAXTRAC® wire drive enhances performance, while the replacement case, and many other upgrade options that can be installed in less then five minutes aid in the serviceability.

KP1697-5/64 Drive Roll Kit- Includes: 2 polished U groove drive rolls, outer wire guide and inner wire guide for solid core wire. (Used on LN-25 Pro)

KP1697-068 Drive Roll Kit- Includes: 2 polished U groove drive rolls, outer wire guide and inner wire guide for solid core wire. (Used on LN-25 Pro)
KP1696-1 Drive Roll Kit- Includes: 2 V groove drive rolls and inner wire guide for Steel Wires. (Used on LN-25 Pro)

K449 LN-25 - Includes internal contactor for across the arc operation (no control cable). Provides "cold" electrode until gun trigger is pressed. Includes gas solenoid.

K1870-1 LN-15 Across the Arc Wire Feeder.
Portable, lightweight, compact CC/CV unit for flux-cored and MIG welding. Includes Gas Solenoid, adjustable flow meter and internal contactor. For 10-15 lb. (4.5-6.8kg) spools.

Magnum Gun and Magnum Gun Connector Kit are required for gas-shielded welding. Innershield Gun is required for gasless welding.

K126-2 Magnum 350 Innershield Gun
K1802-1 Magnum 300 MIG Gun (for LN-25)
K470-2 Magnum 300 MIG Gun (for LN-15, Includes Connector Kit)
K466-10 Connector Kit (for LN-15, K470-2)
K1500-1 Gun Receiver Bushing (for LN-15 & K126-2)

K487-25 Magnum SG Spool Gun
Hand held semiautomatic wire feeder. Requires SG Control Module and Input Cable.

K488 SG Control Module (For Magnum Spool Gun)
The Interface between the power source and the spool gun. Provides control of the wire speed and gas flow. For use with a spool gun.

K691-10 Input Cable (For SG Control Module)
For Lincoln engine power sources with 14-pin MS-type connection, separate 115V NEMA receptacles and output stud connections.

Note: See Wire Feeder IM manuals for appropriate Drive Roll and Guide Tubes.

TIG OPTIONS

K1783-9 Pro -Torch® PTA-26V TIG Torch
Air Cooled 200 amp torch (2 piece) equipped with valve for gas flow control. 25 ft. (7.6m) length.

KP509 Magnum Parts Kit for PTA-26V TIG Torch
Magnum Parts Kit provides all the torch accessories you need to start welding. Parts kit provides collets, collet bodies, a black cap, alumina nozzles and tungstens in a variety of sizes, all packaged in an easy to carry reclosable sack.

K870 Foot Amptrol®

K963-3 Hand Amptrol®

K2535-1 Precision TIG 225 Ready-Pak(For AC TIG)

K2350-2 Invertec® V205-T AC/DC One-Pak™ Package (For AC TIG)

PLASMA CUTTING

K1580-1 Pro-Cut 55
Cuts mild steel using the 3-phase AC generator power from the engine driven welder. Accepts 3-phase or 1-phase input power. Requires the K1816-1 Full KVA adapter kit, if connected for 1-phase input power.

SAFETY PRECAUTIONS

⚠ WARNING

- **Have qualified personnel do all maintenance and troubleshooting work.**
- **Turn the engine off before working inside the machine or servicing the engine.**
- **Remove guards only when necessary to perform maintenance and replace them when the maintenance requiring their removal is complete. If guards are missing from the machine, obtain replacements from a Lincoln Distributor. (See Operating Manual Parts List.)**

Read the Safety Precautions in the front of this manual and in the Engine Owner's Manual before working on this machine.

Keep all equipment safety guards, covers, and devices in position and in good repair. Keep hands, hair, clothing, and tools away from the gears, fans, and all other moving parts when starting, operating, or repairing the equipment.

Routine Maintenance

At the end of each day's use, refill the fuel tank to minimize moisture condensation in the tank. Running out of fuel tends to draw dirt into the fuel system. Also, check the crankcase oil level and add oil if indicated.

Engine Oil Change

Drain the engine oil while the engine is warm to assure rapid and complete draining. It is recommended that each time the oil is changed the oil filter be changed as well.

- Be sure the unit is off. Disconnect the negative battery cable to ensure safety.
- Locate oil drain hose and valve in bottom of base and pull through the hole in the battery access panel on the welder.
- Remove the cap from the drain valve. Push valve in and twist counterclockwise. Pull to open and drain the oil into a suitable container for disposal.

FIGURE D.1

ENGINE SERVICE ITEMS
KUBOTA V1505 (22.0 HP)

EVERY DAY OR EVERY 8 HOURS	FIRST SERVICE (50 HOURS)	EVERY 100 HOURS OR 3 MONTHS	EVERY 200 HOURS OR 4 MONTHS	EVERY 400 HOURS OR 9 MONTHS	EVERY 500 HOURS OR ANNUALLY	EVERY 1000 HOURS OR 2 YEARS.	ENGINE SERVICE (NOTE 2)	MAINTENANCE ITEM	TYPE, QTY, OR SERVICE NOTE
I								Coolant level	Check at overflow bottle.
					C			Radiator core	
						R		Coolant	50/50 Mixture ethylene glycol/water
I								Engine oil level	
	R		R					Engine oil (1)	6.3 quarts, 6.0L (including filter)
	R		R					Engine oil filter	Kubota #16271-32090
				R				Water separator / fuel sedimenter	Kubota #15831-43380
				R				Fuel filter (in-line)	Kubota # 12581-43012
	I		I					Fan belt	Kubota #16282-97010 (37.5")
			I		R			Air filter element	Donaldson # P822686
					I			Battery	BCI Group 34

I = Inspect C = Clean R = Replace (1) Consult Engine Operators Manual for oil recommendations.

See engine manual for complete engine care.

These preventive maintenance periods apply to average conditions of operation. If necessary use shorter periods.

S26073

- Close the drain valve by pushing in and twisting clockwise. Replace the cap.

- Re-fill the crankcase to the upper limit mark on the dipstick with the recommended oil (see engine operation manual OR engine service items decal OR below). Replace and tighten the oil filler cap securely.

- Push oil drain hose and valve back into unit, re-connect negative battery cable, and close doors and engine top cover before restarting unit. Wash your hands with soap and water after handling used motor oil. Please dispose of used motor oil in a manner that is compatible with the environment. We suggest you take it in a sealed container to your local service station or recycling center for reclamation. DO NOT throw it in the trash, pour it on the ground or down a drain.

Use motor oil designed for diesel engines that meets requirements for API service classification CC/CD/CE/CF/CF-4/CG-4 or CH-4.

ACEA E1/E2/E3. Always check the API service label on the oil container to be sure it includes the letters indicated. (Note: An S-grade oil must not be used in a diesel engine or damage may result. It IS permissible to use an oil that meets S and C grade service classifications.)

SAE 10W30 is recommended for general, all temperature use, 5F to 104F (-15C to 40C).

See engine owner's manual for more specific information on oil viscosity recommendations.

Oil Filter Change

- Drain the oil.

- Remove the oil filter with an oil filter wrench and drain the oil into a suitable container. Discard the used filter. Note: Care should be taken during filter removal to not disrupt or damage in any way the fuel lines.

- Clean the filter mounting base and coat the gasket of the new filter with clean engine oil.

- Screw the new filter on by hand until the gasket contacts the mounting base. Using an oil filter wrench, tighten the filter an additional 1/2 to 7/8 of a turn.
- Refill the crankcase with the specified amount of the recommended engine oil. Reinstall the oil filler cap and tighten securely.

- Start the engine and check for oil filter leaks.

- Stop the engine and check the oil level. If necessary, add oil to the upper limit mark on the dipstick.

⚠ WARNING

- **Never use gasoline or low flash point solvents for cleaning the air cleaner element. A fire or explosion could result.**

⚠ CAUTION

- **Never run the engine without the air cleaner. Rapid engine wear will result from contaminants, such as dust and dirt being drawn into the engine.**

AIR CLEANER

The diesel engine is equipped with a dry type air filter. Never apply oil to it. Service the air cleaner as follows:

Replace the element every 500 hours of operation. Under dusty conditions, replace sooner.

Service Instructions

Single- and Two-Stage Engine Air Cleaners

1 Remove the Filter

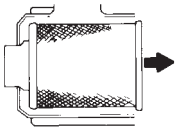

Rotate the filter while pulling straight out.

Unfasten or unlatch the service cover. Because the filter fits tightly over the outlet tube to create the critical seal, there will be some initial resistance, similar to breaking the seal on a jar. Gently move the end of the filter back and forth to break the seal then rotate while pulling straight out. Avoid knocking the filter against the housing.

If your air cleaner has a safety filter, replace it every third primary filter change. Remove the safety filter as you would the primary filter. Make sure you cover the air cleaner outlet tube to avoid any unfiltered contaminant dropping into the engine.

2 Clean Both Surfaces of the Outlet Tube and Check the Vacuator™ Valve

Use a clean cloth to wipe the filter sealing surface and the inside of the outlet tube. Contaminant on the sealing surface could hinder an effective seal and cause leakage. Make sure that all contaminant is removed before the new filter is inserted. Dirt accidently transferred to the inside of the outlet tube will reach the engine and cause wear. Engine manufacturers say that it takes only a few grams of dirt to "dust" an engine! Be careful not to damage the sealing area on the tube.

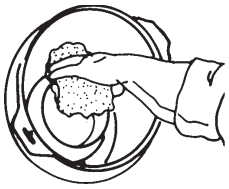

Outer edge of the outlet tube

Wipe both sides of the outlet tube clean.

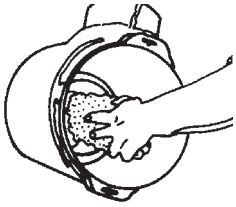

Inner edge of the outlet tube

If your air cleaner is equipped with a Vacuator Valve
Visually check and physically squeeze to make sure the valve is flexible and not inverted, damaged or plugged.

3 Inspect the Old Filter for Leak Clues

Visually inspect the old filter for any signs of leaks. A streak of dust on the clean side of the filter is a telltale sign. Remove any cause of leaks before installing new filter.

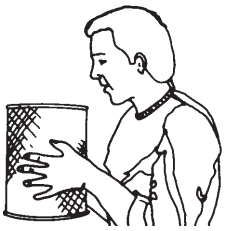

4 Inspect the New Filter for Damage

Inspect the new filter carefully, paying attention to the inside of the open end, which is the sealing area. NEVER install a damaged filter. A new Donaldson radial seal filter may have a dry lubricant on the seal to aid installation.

5 Insert the New Radial Seal Filter Properly

If you're servicing the safety filter, this should be seated into position before installing the primary filter.

Insert the new filter carefully. Seat the filter by hand, making certain it is completely into the air cleaner housing before securing the cover in place.

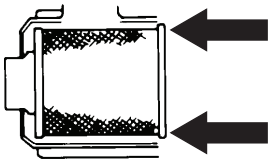

The critical sealing area will stretch slightly, adjust itself and distribute the sealing pressure evenly. To complete a tight seal, apply pressure by hand at the outer rim of the filter, not the flexible center. (Avoid pushing on the center of the urethane end cap.) No cover pressure is required to hold the seal. NEVER use the service cover to push the filter into place! Using the cover to push the filter in could cause damage to the housing, cover fasteners and will void the warranty.

If the service cover hits the filter before it is fully in place, remove the cover and push the filter (by hand) further into the air cleaner and try again. The cover should go on with no extra force.

Once the filter is in place, secure the service cover.

Caution

NEVER use the service cover to push the filter into place! Using the cover to push the filter in could cause damage to the housing, cover fasteners and will void the warranty.

6 Check Connectors for Tight Fit

Make sure that all mounting bands, clamps, bolts, and connections in the entire air cleaner system are tight. Check for holes in piping and repair if needed. Any leaks in your intake piping will send dust directly to the engine!

COOLING SYSTEM

⚠ WARNING

HOT COOLANT can burn skin.

- **Do not remove cap if radiator is hot.**

Check the coolant level by observing the level in the radiator and recovery bottle. Add 50/50 antifreeze / water solution if the level is close to or below the "LOW" mark. do not fill above the "FULL" mark. Remove radiator cap and add coolant to radiator. Fill up to the top of the tube in the radiator filler neck which includes a connecting hose coming from the thermostat housing.

To drain the coolant, open the valve at the bottom of the radiator. Open the radiator cap to allow complete drainage. (Tighten the valve and refill with a 50/50 antifreeze/water solution.) Use an automotive grade (low silicate) ethylene glycol antifreeze. The cooling system capacity is 7.2 qts. (6.8L.). Squeeze upper and lower radiator hoses while filling to bleed air from system coolant. Replace and tighten the radiator cap.

⚠ CAUTION

Always premix the antifreeze and clean tap water before adding to the radiator. It is very important that a precise 50/50 solution be used with this engine year round. This gives proper cooling during hot weather and freezing protection to -34° F (-37° C).

Cooling solution exceeding 50% ethylene glycol can result in engine overheating and damage to the engine. Coolant solution must be premixed before adding to radiator.

Periodically remove the dirt from the radiator fins.
Periodically check the fan belt and radiator hoses. Replace if signs of deterioration are found.

TIGHTENING THE FAN BELT

If the fan belt is loose, the engine can overheat and the battery lose its charge. Check tightness by pressing on the belt midway between the pulleys. It should deflect about .25 in.(6.4 mm) under a load of 20 lbs.(9 Kg).

FUEL

DIESEL FUEL ONLY-Low sulphur fuel or ultra low sulphur fuel in U.S.A. and Canada.

At the end of each day's use, refill the fuel tank to minimize moisture condensation and dirt contamination in the fuel line. Do not overfill; leave room for the fuel to expand.

Use only fresh No. 2D diesel fuel, the use of No. 1D diesel fuel is recommended in place of No. 2D at temperatures below 23°F (-5°C). Do not use kerosene.

See the Engine Operator's Manual for instructions on replacing the fuel filter.

BLEEDING THE FUEL SYSTEM

You may need to bleed air from the fuel system if the fuel filter or fuel lines have been detached, the fuel tank has been ran empty or after periods of long storage. It is recommended that the fuel shutoff valve be closed during periods of non-use.

⚠ WARNING

To avoid personal injury, do not bleed a hot engine. This could cause fuel to spill onto a hot exhaust manifold, creating a danger of fire.

Bleed the fuel system as follows:

1. Fill the fuel tank with fuel.
2. Open the fuel shut off valve.
3. Open bleed fitting on fuel sedimenter, the sedimenter should gravity fill itself with fuel.
4. Tighten the bleed fitting on fuel sedimenter after sedimenter fills with fuel.
5. Loosen bleed fitting on the fuel injector manifold.
6. Operate hand priming lever until fuel comes out the bleed screw on the injector manifold. This could take 20-30 seconds of rapid operation of the priming lever. Tighten bleed fitting on injector manifold.
7. Follow normal STARTING procedures until engine starts.

FUEL FILTER

1. Check the fuel filter and fuel pre-filter for water accumulation or sediment.

2. Replace the fuel filter if it is found with excessive water accumulation or sediment. Empty fuel pre-filter.

OVERSPEED IS HAZARDOUS

The maximum allowable high idle speed for this machine is 1890 RPM no load. Do NOT tamper with governor components or setting or make any other adjustments to increase the maximum speed. Severe personal injury and damage to the machine can result if operated at speeds above maximum.

ENGINE ADJUSTMENT

Adjustments to the engine are to be made only by a Lincoln Service Center or an authorized Field Service Shop.

BATTERY MAINTENANCE

To access the battery, remove the battery tray from the front of the machine with 3/8” nut driver or flat head screw driver. Pull the tray out of machine far enough to disconnect the negative and then positive battery cables. The tray can then be tilted and lifted to remove the entire tray and battery from the machine for easy service.

⚠ WARNING

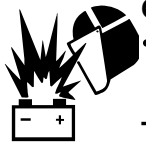

GASES FROM BATTERY can explode.

- **Keep sparks, flame and cigarettes away from battery.**

To prevent EXPLOSION when:

- **INSTALLING A NEW BATTERY — disconnect negative cable from old battery first and connect to new battery last.**
- **CONNECTING A BATTERY CHARGER — remove battery from welder by disconnecting negative cable first, then positive cable and battery clamp. When reinstalling, connect negative cable last. Keep well ventilated.**
- **USING A BOOSTER — connect positive lead to battery first then connect negative lead to negative battery lead at engine foot.**

BATTERY ACID can burn eyes and skin.

- **Wear gloves and eye protection and be careful when working near battery.**
- **Follow instructions printed on battery.**

CLEANING THE BATTERY

Keep the battery clean by wiping it with a damp cloth when dirty. If the terminals appear corroded, disconnect the battery cables and wash the terminals with an ammonia solution or a solution of 1/4 pound (0.1113 kg) of baking soda and 1 quart (0.9461) of water. Be sure the battery vent plugs (if equipped) are tight so that none of the solution enters the cells.

After cleaning, flush the outside of the battery, the battery compartment, and surrounding areas with clear water. Coat the battery terminals lightly with petroleum jelly or a non-conductive grease to retard corrosion.

Keep the battery clean and dry. Moisture accumulation on the battery can lead to more rapid discharge and early battery failure.

CHECKING THE ELECTROLYTE LEVEL

If battery cells are low, fill them to the neck of the filler hole with distilled water and recharge. If one cell is low, check for leaks.

CHARGING THE BATTERY

When you charge, jump, replace, or otherwise connect battery cables to the battery, be sure the polarity is correct. Improper polarity can damage the charging circuit. The VANTAGE® 300 positive (+) battery terminal has a red terminal cover.

If you need to charge the battery with an external charger, disconnect the negative cable first, then the positive cable before you attach the charger leads. After the battery is charged, reconnect the positive battery cable first and the negative cable last. Failure to do so can result in damage to the internal charger components.

Follow the instructions of the battery charger manufacturer for proper charger settings and charging time.

SERVICING OPTIONAL SPARK ARRESTOR

Clean every 100 hours.

⚠ WARNING

- **MUFFLER MAY BE HOT**

- **ALLOW ENGINE TO COOL BEFORE INSTALLING THE SPARK ARRESTER!**

- **DO NOT OPERATE ENGINE WHILE INSTALLING THE SPARK ARRESTER!**

WELDER / GENERATOR MAINTENANCE

STORAGE: Store in clean, dry protected areas.

CLEANING: Blow out the generator and controls periodically with low pressure air. Do this at least once a week in particularly dirty areas.

BRUSH REMOVAL AND REPLACEMENT: It's normal for the brushes and slip rings to wear and darken slightly. Inspect the brushes when a generator overhaul is necessary.

⚠ CAUTION

- **Do not attempt to polish slip rings while the engine is running.**

⚠ WARNING

- **Service and Repair should only be performed by Lincoln Electric Factory Trained Personnel. Unauthorized repairs performed on this equipment may result in danger to the technician and machine operator and will invalidate your factory warranty. For your safety and to avoid Electrical Shock, please observe all safety notes and precautions.**

HOW TO USE TROUBLESHOOTING GUIDE

⚠ WARNING

Service and Repair should only be performed by Lincoln Electric Factory Trained Personnel. Unauthorized repairs performed on this equipment may result in danger to the technician and machine operator and will invalidate your factory warranty. For your safety and to avoid Electrical Shock, please observe all safety notes and precautions detailed throughout this manual.

This Troubleshooting Guide is provided to help you locate and repair possible machine malfunctions. Simply follow the three-step procedure listed below.

Step 1. LOCATE PROBLEM (SYMPTOM).
Look under the column labeled “PROBLEM (SYMPTOMS)”. This column describes possible symptoms that the machine may exhibit. Find the listing that best describes the symptom that the machine is exhibiting.

Step 2. POSSIBLE CAUSE.
The second column labeled “POSSIBLE CAUSE” lists the obvious external possibilities that may contribute to the machine symptom.

Step 3. RECOMMENDED COURSE OF ACTION
This column provides a course of action for the Possible Cause, generally it states to contact your local Lincoln Authorized Field Service Facility.

If you do not understand or are unable to perform the Recommended Course of Action safely, contact your local Lincoln Authorized Field Service Facility.

⚠ CAUTION

If for any reason you do not understand the test procedures or are unable to perform the tests/repairs safely, contact your **Local Lincoln Authorized Field Service Facility** for technical troubleshooting assistance before you proceed.

Observe all Safety Guidelines detailed throughout this manual

PROBLEMS (SYMPTOMS)	POSSIBLE CAUSE	RECOMMENDED COURSE OF ACTION
Major Physical or Electrical Damage is Evident.	1. **Contact your local Lincoln Authorized Field Service Facility.**	If all recommended possible areas of misadjustment have been checked and the problem persists, **Contact your local Lincoln Authorized Field Service Facility.**
Engine will not "crank".	1. Battery is low, Charge Battery. 2. Loose battery cable connections. Inspect, clean and tighten terminals. 3. Faulty engine starter motor. Contact authorized local Engine Service Shop.	
Engine will "crank" but not start.	1. Fuel shut off valve on Main Fuel Filter in the OFF position. Open valve (vertical) position of handle. 2. Fuel Filters dirty/clogged. Check and replace main filter element and/or Inline Fuel Filter. 3. Out of fuel. Fill tank and bleed fuel system. 4. High coolant temperature or low oil pressure. (indictor lights lit) Check oil and coolant levels. Fill if required. Check for loose or broken fan belt. 5. ON/OFF switch on for more then 60 seconds before starting. The ON/OFF switch will need to be switched off and turned back on. 6. Faulty fuel shutdown solenoid. Check that shutdown solenoid is functioning properly and not binding / contact authorized engine service shop. (Kubota Only) 7. Electronic Governor Controller not functioning properly. (Deutz only) 8. Faulty fuel pump. Check for fuel flow through filters. Contact authorized local Engine Service Shop.	
Engine shuts down shortly after starting.	1. High coolant temperature or low oil pressure. (indictor light lit) Change oil and oil filters and fill to proper level. Check and fill coolant level. Check for loose or broken fan belt. Start engine and look for leaks. 2. Faulty oil pressure switch or other engine component. Contact authorized local Engine Service Shop. 3. Faulty Idler/Protection Board.	

⚠ CAUTION

If for any reason you do not understand the test procedures or are unable to perform the tests/repairs safely, contact your **Local Lincoln Authorized Field Service Facility** for technical troubleshooting assistance before you proceed.

Observe all Safety Guidelines detailed throughout this manual

PROBLEMS (SYMPTOMS)	POSSIBLE CAUSE	RECOMMENDED COURSE OF ACTION
Engine shuts down while under a load.	1. High radiator coolant temperature. Reduce load if it is exceeding machine rating. Add coolant to system if low. Clean fins on radiator if dirty. Tighten fan belt if loose. Remove objects blocking or close to intake openings on both sides of base and exhaust end (case back).	If all recommended possible areas of misadjustment have been checked and the problem persists, **Contact your local Lincoln Authorized Field Service Facility.**
Engine runs rough.	1. Dirty fuel or air filters. Inspect and clean/replace filters as needed. Inspect and clean/replace filters as needed. 2. Water in fuel. If water found in tank. Empty fuel tank and refill then purge fuel lines.	
Battery does not stay charged. Engine alternator trouble light is on while machine is running.	1. Faulty battery. Replace. 2. Loose connections at battery or alternator. Clean and tighten connections. 3. Faulty engine alternator or charger module. Consult authorized Engine Service Shop.	
Engine will not idle down to low speed.	1. Idler switch in High idle position. Set switch to Auto. 2. External load on welder or auxiliary power. Remove all external loads. 3. Faulty PC board or idler solenoid.	
Engine will not go to high idle when attempting to weld.	1. Poor work lead connection to work. Make sure work clamp is tightly connected to clean base metal. 2. "Contactor" switch is in wrong position. Set to "Welding On" when welding without a control cable. Refer to Operations chapter for proper use of this switch. 3. Faulty PC board. Low idle speed set to low.	

⚠ CAUTION

If for any reason you do not understand the test procedures or are unable to perform the tests/repairs safely, contact your **Local Lincoln Authorized Field Service Facility** for technical troubleshooting assistance before you proceed.

Observe all Safety Guidelines detailed throughout this manual

PROBLEMS (SYMPTOMS)	POSSIBLE CAUSE	RECOMMENDED COURSE OF ACTION
Engine will not go to high idle when using auxiliary power.	1. Auxiliary power load is less than 100 watts. Idler may not respond with less than a 100 watt load. Set idler to "High". 2. Faulty PC board.(Control or Idler).	If all recommended possible areas of misadjustment have been checked and the problem persists, **Contact your local Lincoln Authorized Field Service Facility.**
Engine will not go to high idle under weld or auxiliary loading.	1. Faulty idler solenoid. Check for bent linkage or broken spring. 2. Faulty PC board.(Control or Idler).	
Engine does not develop full power. Engine runs rough.	1. Fuel filter clogged, Replace. 2. Air filter clogged, clean or replace. 3. High idle setting incorrect, check and adjust if required. 4. Valves out of adjustment. 5. Fuel contaminated with water or sediment. Check fuel pre-filter and empty of water, bleed fuel system. Replace fuel in tank if needed.	
Engine will not go to high idle when attempting to weld or using auxiliary power. Switching to manual high idle does not work.	1. Broken spring on Idle Solenoid, solenoid linkage binding, low idle speed set too low on idle solenoid. 2. Faulty PC Board (Control or Idler).	
Engine will not shut off.	1. Fuel Shutdown solenoid not functioning properly / linkage binding. Stop engine by shutting off valve located on main fuel filter. Contact authorized local Engine Service Shop.	

⚠ CAUTION

If for any reason you do not understand the test procedures or are unable to perform the tests/repairs safely, contact your **Local Lincoln Authorized Field Service Facility** for technical troubleshooting assistance before you proceed.

Observe all Safety Guidelines detailed throughout this manual

PROBLEMS (SYMPTOMS)	POSSIBLE CAUSE	RECOMMENDED COURSE OF ACTION
Engine does not develop full power. Low weld and auxiliary output. Engine runs rough.	1. Fuel filter dirty/clogged. Replace. 2. Air filter dirty/clogged. Replace Air Filter Element. 3. Fouled fuel injector(s). Contact authorized Engine Service Shop. 4. Fuel contaminated with water. Check Main Filter Bowl and Inline Fuel filters for water. Clean and replace as needed. Replace fuel in tank. 5. Cracked or loose fuel hose. Replace hose and tighten clamps. 6. Valves out of adjustment. Contact authorized local Engine Service Shop.	If all recommended possible areas of misadjustment have been checked and the problem persists, **Contact your local Lincoln Authorized Field Service Facility.**
No welding power output.	1. Poor work lead connection to work. Make sure work clamp is tightly connected to clean base metal. 2. "Weld Terminals" switch in wrong position. Place switch in "Weld Terminals On" position when welding without control cable. 3. Faulty PC board or welder alternator.	
Welder has output but no control.	1. Poor remote/control cable connection to 6-pin or 14-pin connector. Check connections. 2. Faulty remote cable or faulty wire feeder or wire feeder cable. Replace if necessary. 3. Faulty control potentiometer or PC board.	
Wire feeder does not work when control cable is connected to 14 pin connector.	1. Wire Feeder Power circuit breaker open. Check 42V and 120V beakers and reset if tripped. 2. Faulty control cable. Repair or replace cable. 3. Faulty wire feeder. Replace wire feeder.	

⚠ CAUTION

If for any reason you do not understand the test procedures or are unable to perform the tests/repairs safely, contact your **Local Lincoln Authorized Field Service Facility** for technical troubleshooting assistance before you proceed.

Observe all Safety Guidelines detailed throughout this manual

PROBLEMS (SYMPTOMS)	POSSIBLE CAUSE	RECOMMENDED COURSE OF ACTION
No auxiliary power.	1. Open circuit breakers. Reset breakers. If breakers keep tripping reduce power draw. 2. Faulty connections to auxiliary receptacles. Check connections. 3. Faulty PC board or welder alternator.	If all recommended possible areas of misadjustment have been checked and the problem persists, **Contact your local Lincoln Authorized Field Service Facility.**
The welding arc is “cold.” The welding arc is not stable or is not satisfactory. the engine runs normally. The auxiliary power is normal.	1. Make sure the MODE selector switch is in the correct position for the process being used. (For example, CV-WIRE, PIPE, CC-STICK.) 2. Make sure the electrode (wire, gas, voltage, current etc.) is correct for the process being used. 3. Check for loose or faulty connections at the weld output terminals and welding cable connections. 4. The welding cables may be too long or coiled, causing an excessive voltage drop. 5. Faulty Control Board.	
No output in Pipe Mode.	1. Make sure VRD ON/OFF toggle switch is in the “OFF” position. 2. Poor work lead connection to work. Make sure work clamp is tightly connected to clean base metal. 3. "Weld Terminals" switch in wrong position. Place switch in "Weld Terminals On" position when welding without control cable. 4. Faulty PC board or welder alternator.	
VRD Lights don’t light up.	1. Ensure VRD ON/OFF switch is in the “ON” position. 2. If light is burned out, replace both VRD lights. 3. Faulty OCV indicator PC board.	

⚠ CAUTION

If for any reason you do not understand the test procedures or are unable to perform the tests/repairs safely, contact your **Local Lincoln Authorized Field Service Facility** for technical troubleshooting assistance before you proceed.

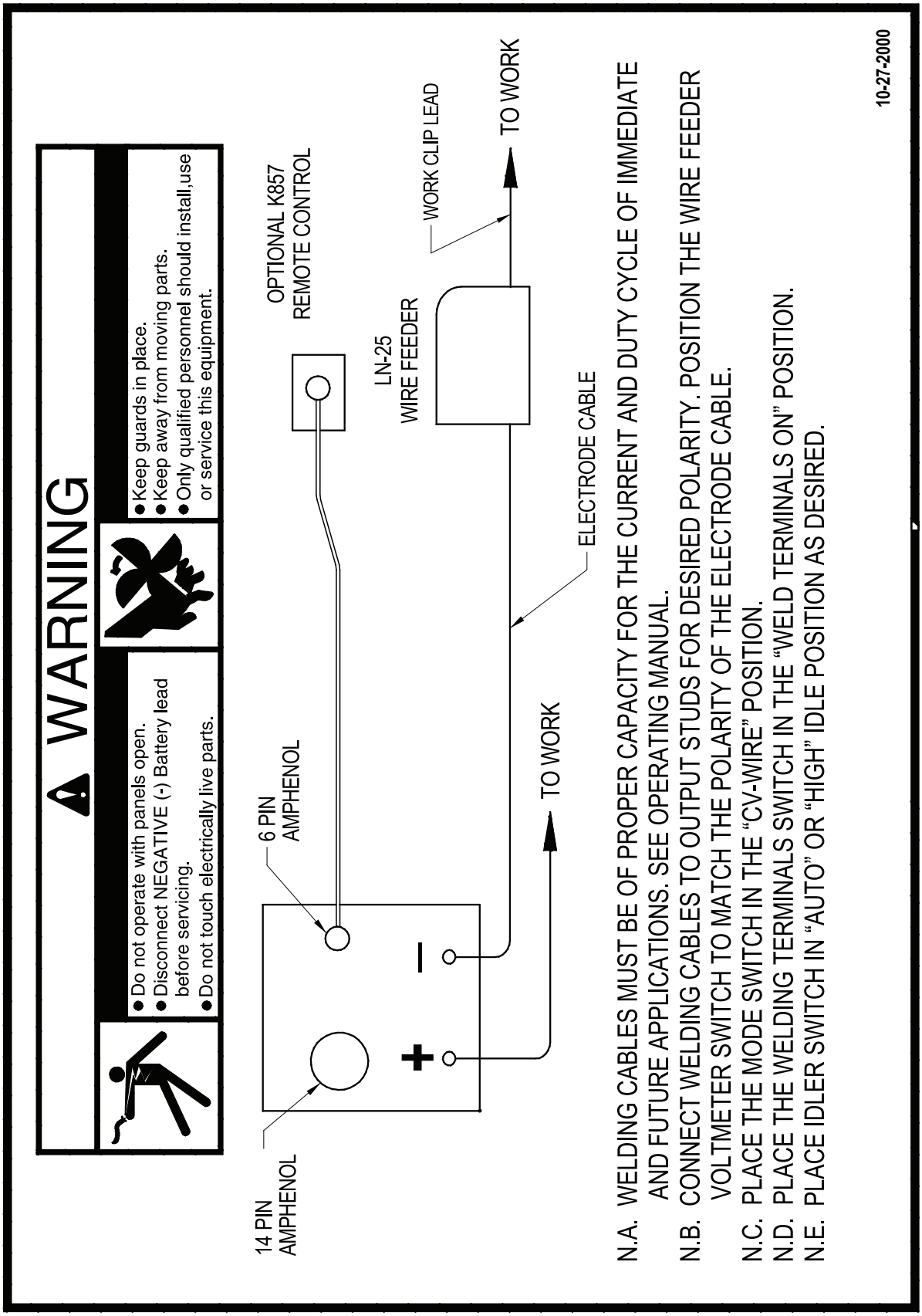
WITH OPTIONAL K857 REMOTE CONTROL
WARNING
Do not operate with panels open.
Disconnect NEGATIVE (-) Battery lead before servicing.
Do not touch electrically live parts.
Keep guards in place.
Keep away from moving parts.
Only qualified personnel should install,use or service this equipment.
OPTIONAL K857 REMOTE CONTROL
WORK CLIP LEAD
TO WORK
LN-25 WIRE FEEDER
ELECTRODE CABLE
6 PIN AMPHENOL
TO WORK
14 PIN AMPHENOL
N.A. WELDING CABLES MUST BE OF PROPER CAPACITY FOR THE CURRENT AND DUTY CYCLE OF IMMEDIATE AND FUTURE APPLICATIONS. SEE OPERATING MANUAL.
N.B. CONNECT WELDING CABLES TO OUTPUT STUDS FOR DESIRED POLARITY. POSITION THE WIRE FEEDER VOLTMETER SWITCH TO MATCH THE POLARITY OF THE ELECTRODE CABLE.
N.C. PLACE THE MODE SWITCH IN THE "CV-WIRE" POSITION.
N.D. PLACE THE WELDING TERMINALS SWITCH IN THE "WELD TERMINALS ON" POSITION.
N.E. PLACE IDLER SWITCH IN "AUTO" OR "HIGH" IDLE POSITION AS DESIRED.
10-27-2000
S24787-1

ENGINE WELDERS /LN-25 ACROSS THE ARC CONNECTION DIAGRAM WITH OPTIONAL K444-1 REMOTE CONTROL

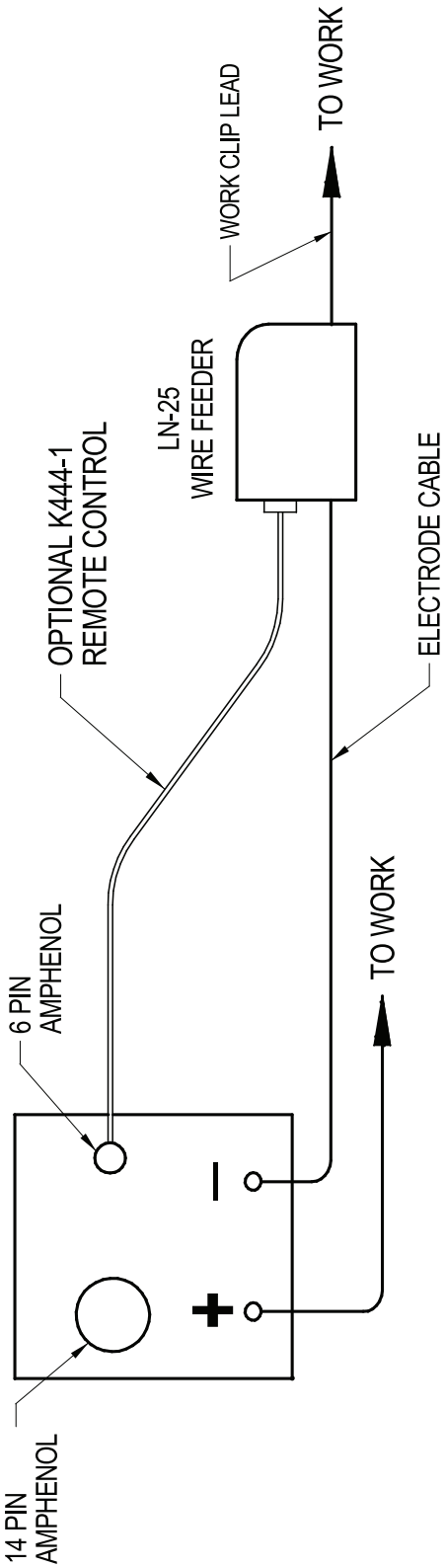

N.A. WELDING CABLES MUST BE OF PROPER CAPACITY FOR THE CURRENT AND DUTY CYCLE OF IMMEDIATE AND FUTURE APPLICATIONS. SEE OPERATING MANUAL.

N.B. CONNECT WELDING CABLES TO OUTPUT STUDS FOR DESIRED POLARITY. POSITION THE WIRE FEEDER VOLTMETER SWITCH TO MATCH THE POLARITY OF THE ELECTRODE CABLE.

N.C. PLACE THE MODE SWITCH IN THE "CV-WIRE" POSITION.

N.D. PLACE THE WELDING TERMINALS SWITCH IN THE "WELD TERMINALS ON" POSITION.

N.E. PLACE IDLER SWITCH IN "AUTO" OR "HIGH" IDLE POSITION AS DESIRED.

10-27-2000

S24787-2

ENGINE WELDERS /LN-7 CONNECTION DIAGRAM

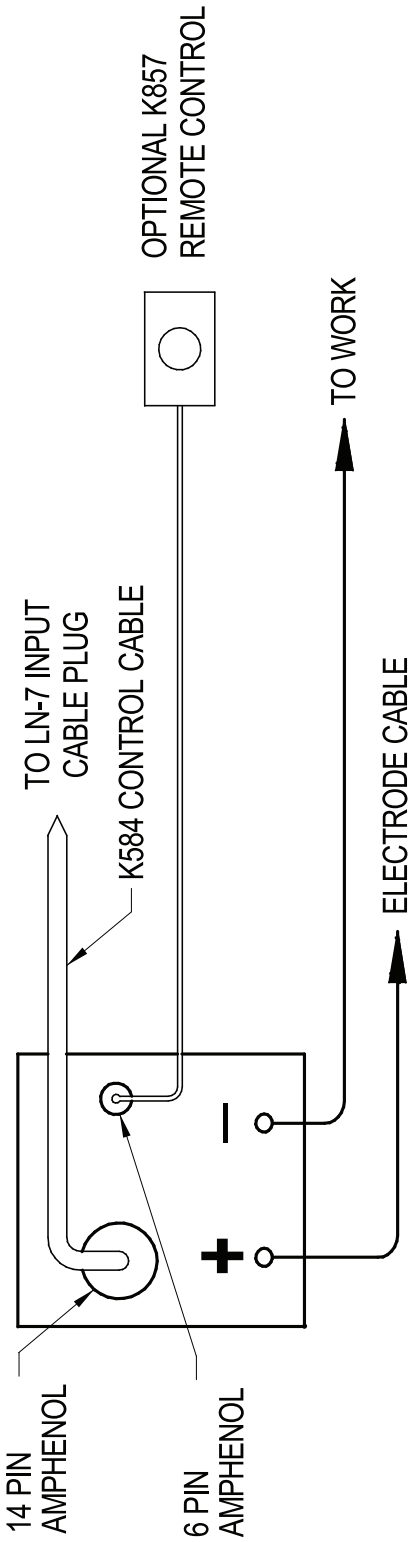

CAUTION:

ANY INCREASE OF THE HIGH IDLE ENGINE RPM BY CHANGING THE GOVERNOR SETTING OR OVERRIDING THE THROTTLE LINKAGE WILL CAUSE AN INCREASE IN THE AC WIRE FEEDER VOLTAGE, WHICH CAN DAMAGE THE CONTROL CIRCUIT. THE ENGINE GOVERNOR SETTING IS PRE-SET AT THE FACTORY – DO NOT ADJUST ABOVE RPM SPECIFICATIONS LISTED IN THE ENGINE WELDER OPERATING MANUAL.

N.A. WELDING CABLES MUST BE OF PROPER CAPACITY FOR THE CURRENT AND DUTY CYCLE OF IMMEDIATE AND FUTURE APPLICATIONS. SEE OPERATING MANUAL.

N.B. CONNECT WELDING CABLES TO OUTPUT STUDS FOR DESIRED POLARITY. POSITION THE WIRE FEEDER VOLTMETER SWITCH TO MATCH THE POLARITY OF THE ELECTRODE CABLE.

N.C. PLACE THE MODE SWITCH IN THE "CV-WIRE" POSITION.

N.D. PLACE IDLER SWITCH IN "HIGH" POSITION.

10-27-2000

S24787-4

ENGINE WELDERS /LN-742 CONNECTION DIAGRAM

⚠ WARNING

- Do not operate with panels open.
- Disconnect NEGATIVE (-) Battery lead before servicing.
- Do not touch electrically live parts.

- Keep guards in place.
- Keep away from moving parts.
- Only qualified personnel should install,use or service this equipment.

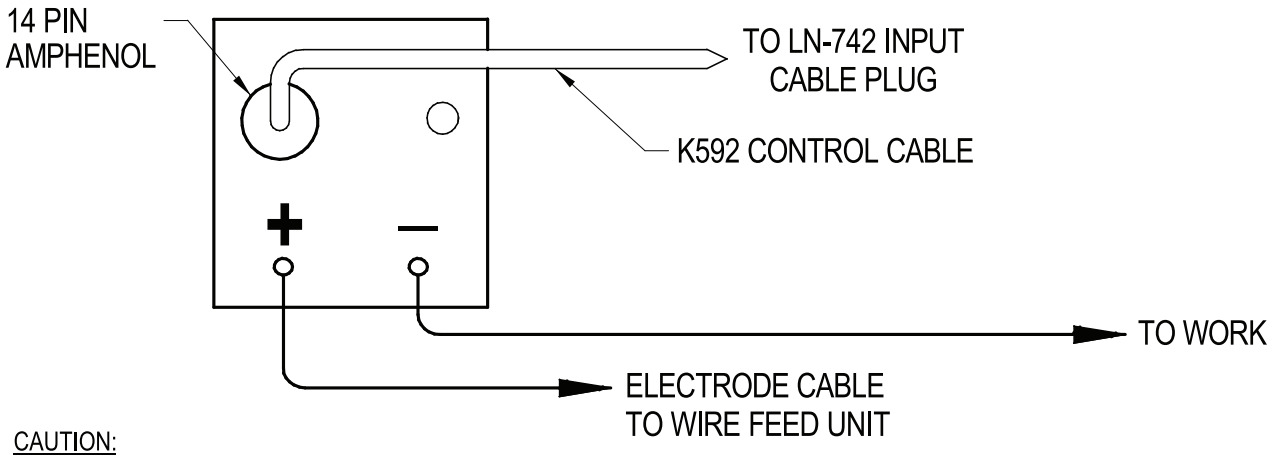

CAUTION:

ANY INCREASE OF THE HIGH IDLE ENGINE RPM BY CHANGING THE GOVERNOR SETTING OR OVERRIDING THE THROTTLE LINKAGE WILL CAUSE AN INCREASE IN THE AC WIRE FEEDER VOLTAGE, WHICH CAN DAMAGE THE CONTROL CIRCUIT. THE ENGINE GOVERNOR SETTING IS PRE-SET AT THE FACTORY – DO NOT ADJUST ABOVE RPM SPECIFICATIONS LISTED IN THE ENGINE WELDER OPERATING MANUAL.

N.A. WELDING CABLES MUST BE OF PROPER CAPACITY FOR THE CURRENT AND DUTY CYCLE OF IMMEDIATE AND FUTURE APPLICATIONS. SEE OPERATING MANUAL.
N.B. CONNECT WELDING CABLES TO OUTPUT STUDS FOR DESIRED POLARITY. POSITION THE WIRE FEEDER VOLTMETER SWITCH TO MATCH THE POLARITY OF THE ELECTRODE CABLE.
N.C. PLACE THE MODE SWITCH IN THE “CV-WIRE” POSITION.
N.D. PLACE WELDER TERMINALS SWITCH TO “REMOTELY CONTROLLED” POSITION.
N.E. PLACE IDLER SWITCH IN “AUTO” OR “HIGH” IDLE POSITION AS DESIRED.

10-27-2000

S24787-5

ENGINE WELDERS /LN-8 CONNECTION DIAGRAM

⚠ WARNING

- Do not operate with panels open.
- Disconnect NEGATIVE (-) Battery lead before servicing.
- Do not touch electrically live parts.

- Keep guards in place.
- Keep away from moving parts.
- Only qualified personnel should install,use or service this equipment.

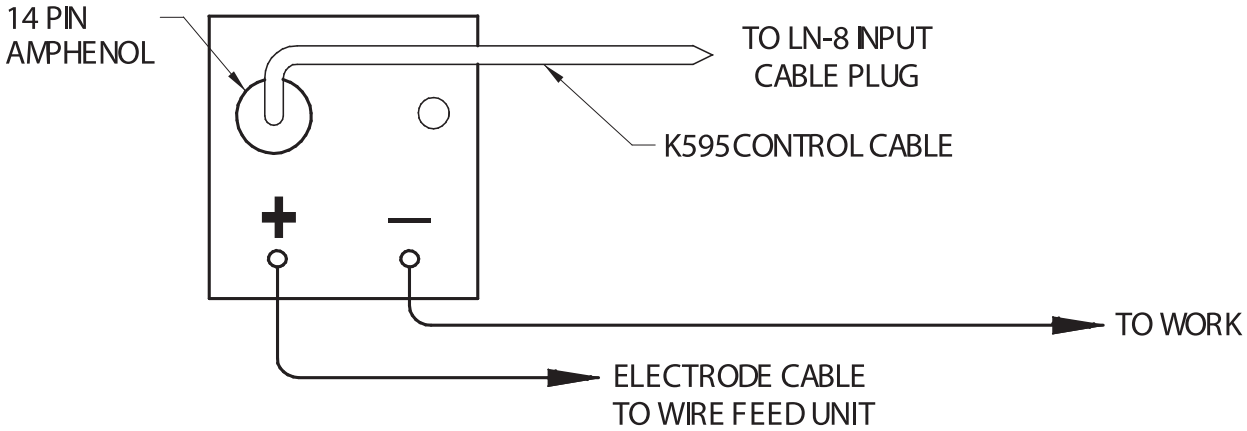

CAUTION

ANY INCREASE OF THE HIGH IDLE ENGINE RPM BY CHANGING THE GOVERNOR SETTING OR OVERRIDING THE THROTTLE LINKAGE WILL CAUSE AN INCREASE IN THE AC WIRE FEEDER VOLTAGE, WHICH CAN DAMAGE THE CONTROL CIRCUIT. THE ENGINE GOVERNOR SETTING IS PRE-SET AT THE FACTORY – DO NOT ADJUST ABOVE RPM SPECIFICATIONS LISTED IN THE ENGINE WELDER OPERATING MANUAL.

N.A. WELDING CABLES MUST BE OF PROPER CAPACITY FOR THE CURRENT AND DUTY CYCLE OF IMMEDIATE AND FUTURE APPLICATIONS. SEE OPERATING MANUAL.

N.B. CONNECT WELDING CABLES TO OUTPUT STUDS FOR DESIRED POLARITY. POSITION THE WIRE FEEDER VOLTMETER SWITCH TO MATCH THE POLARITY OF THE ELECTRODE CABLE.

N.C. PLACE IDLER SWITCH IN "HIGH" POSITION.

4-14-2000

S24787-6

ENGINE WELDERS TO K867 CONTROL CABLE ADAPTER CONNECTION DIAGRAM

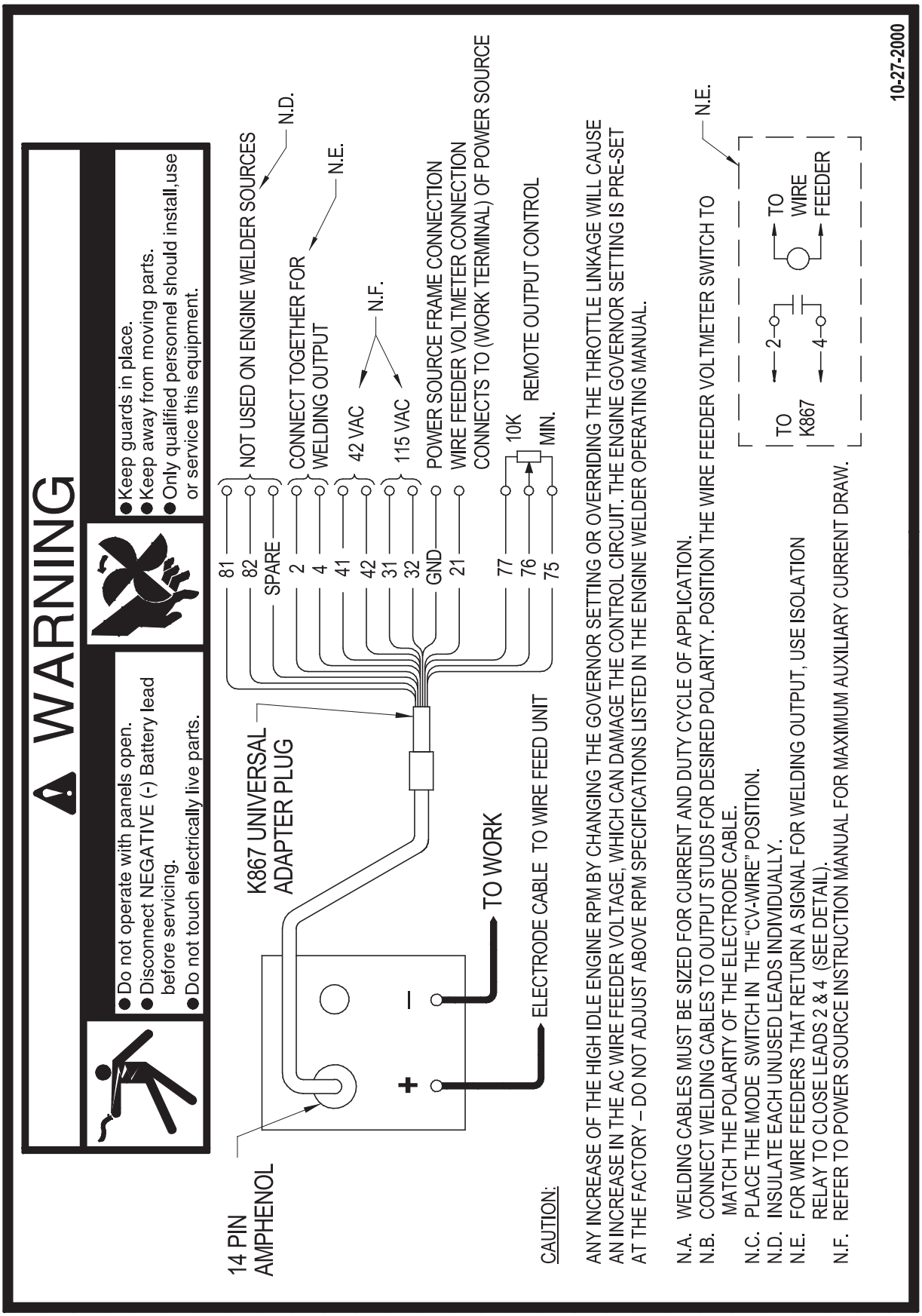

ENGINE WELDERS / K691-10 / K488 / K487 SPOOL GUN CONNECTION DIAGRAM

⚠ WARNING

- Do not operate with panels open.
- Disconnect NEGATIVE (-) Battery lead before servicing.
- Do not touch electrically live parts.

- Keep guards in place.
- Keep away from moving parts.
- Only qualified personnel should install,use or service this equipment.

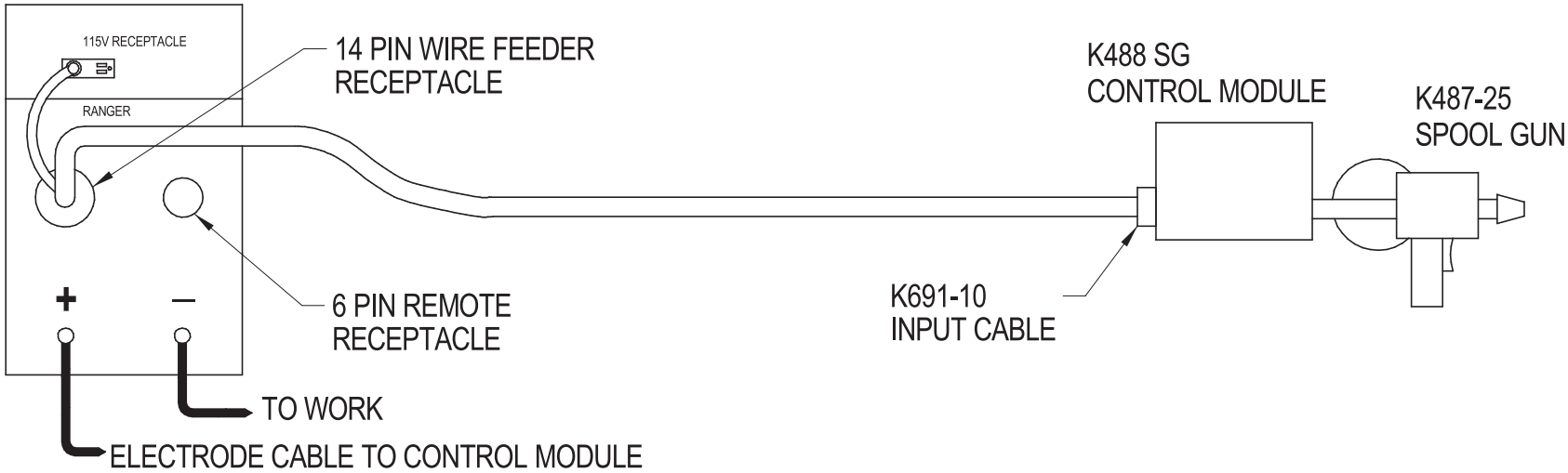

CAUTION: BE SURE THAT CONTROL MODULE MODE SWITCH IS IN THE "LINCOLN" (CONTACT CLOSURE) POSITION BEFORE ATTEMPTING TO OPERATE CONTROL MODULE. INCORRECT SWITCH POSITION COULD RESULT IN DAMAGE TO THE CONTROL MODULE AND/OR POWER SOURCE.

ANY INCREASE OF THE HIGH IDLE ENGINE RPM BY CHANGING THE GOVERNOR SETTING OR OVERRIDING THE THROTTLE LINKAGE WILL CAUSE AN INCREASE IN THE AC WIRE FEEDER VOLTAGE, WHICH CAN DAMAGE THE CONTROL CIRCUIT. THE ENGINE GOVERNOR SETTING IS PRE-SET AT THE FACTORY – DO NOT ADJUST ABOVE RPM SPECIFICATIONS LISTED IN THE ENGINE WELDER OPERATING MANUAL.

N.A. WELDING CABLES MUST BE SIZED FOR CURRENT AND DUTY CYCLE OF APPLICATION.
N.B. CONNECT WELDING CABLES TO OUTPUT STUDS FOR DESIRED POLARITY.
N.C. PLACE THE MODE SWITCH IN THE "CV-WIRE" POSITION. PLACE WELDING TERMINALS SWITCH TO "REMOTELY CONTROLLED" POSITION.
N.D. PLACE IDLER SWITCH IN "HIGH" IDLE POSITION.

10-27-2000

S24787-8

ENGINE WELDERS / K930 TIG MODULE / CONNECTION DIAGRAM

⚠ WARNING

- Do not operate with panels open.
- Disconnect NEGATIVE (-) Battery lead before servicing.
- Do not touch electrically live parts.

- Keep guards in place.
- Keep away from moving parts.
- Only qualified personnel should install,use or service this equipment.

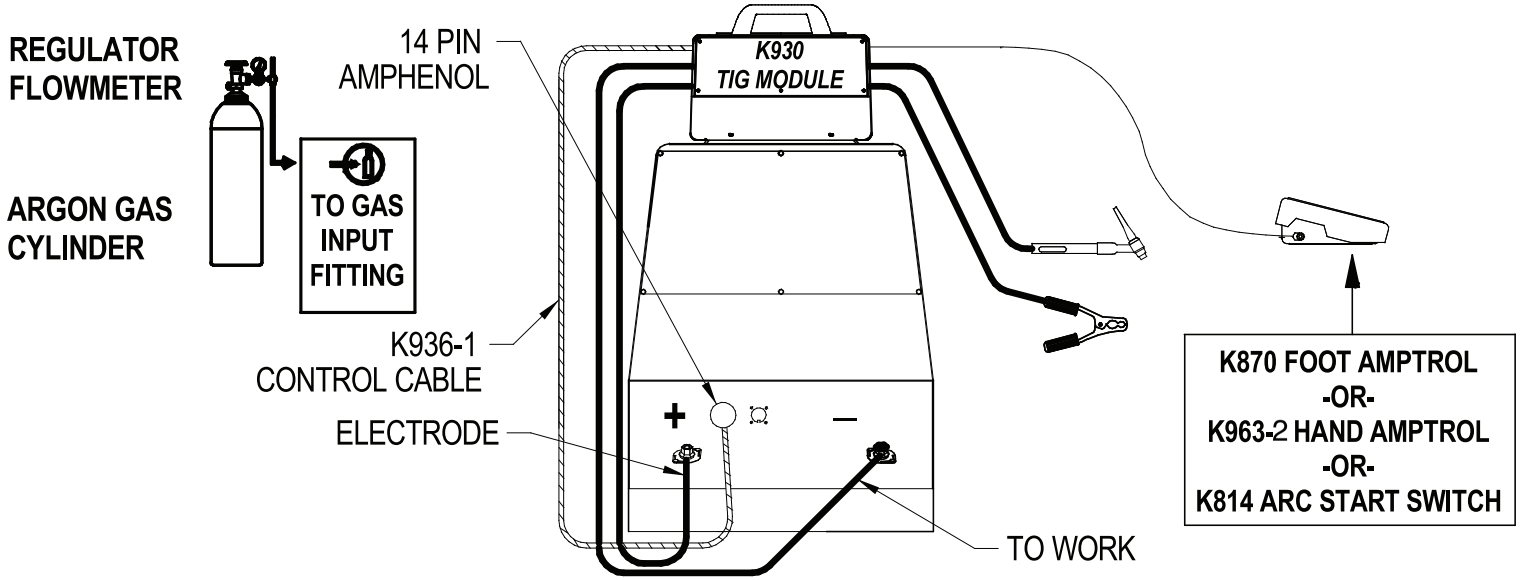

CAUTION:
ANY INCREASE OF THE HIGH IDLE ENGINE RPM BY CHANGING THE GOVERNOR SETTING OR OVERRIDING THE THROTTLE LINKAGE WILL CAUSE AN INCREASE IN THE AC WIRE FEEDER VOLTAGE, WHICH CAN DAMAGE THE CONTROL CIRCUIT. THE ENGINE GOVERNOR SETTING IS PRE-SET AT THE FACTORY – DO NOT ADJUST ABOVE RPM SPECIFICATIONS LISTED IN THE ENGINE WELDER OPERATING MANUAL.

N.A. WELDING CABLES MUST BE OF PROPER CAPACITY FOR THE CURRENT AND DUTY CYCLE OF IMMEDIATE AND FUTURE APPLICATIONS. SEE OPERATING MANUAL.
N.B. CONNECT WELDING CABLES TO OUTPUT STUDS FOR DESIRED POLARITY.
N.C. PLACE THE MODE SWITCH IN THE “TIG” POSITION.
N.D. PLACE OUTPUT CONTROL SWITCH IN “REMOTE CONTROL” POSITION.
N.E. PLACE IDLER SWITCH IN “AUTO” OR “HIGH” IDLE POSITION AS DESIRED.

9/03

S24787-9

ENGINE WELDERS /K2259-1COBRAMATIC CONNECTION DIAGRAM

⚠ WARNING

- Do not operate with panels open.
- Disconnect NEGATIVE (-) Battery lead before servicing.
- Do not touch electrically live parts.

- Keep guards in place.
- Keep away from moving parts.
- Only qualified personnel should install,use or service this equipment.

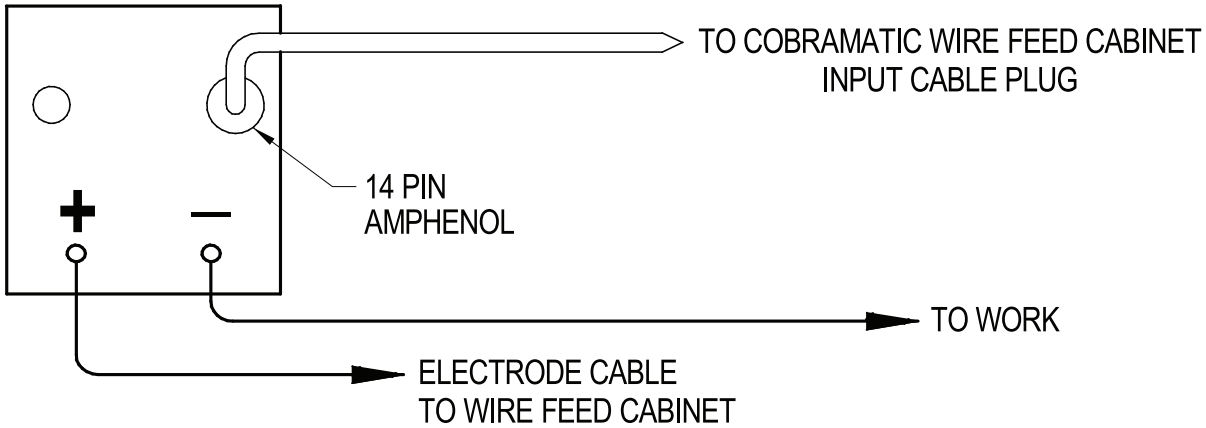

CAUTION:

ANY INCREASE OF THE HIGH IDLE ENGINE RPM BY CHANGING THE GOVERNOR SETTING OR OVERRIDING THE THROTTLE LINKAGE WILL CAUSE AN INCREASE IN THE AC WIRE FEEDER VOLTAGE, WHICH CAN DAMAGE THE CONTROL CIRCUIT. THE ENGINE GOVERNOR SETTING IS PRE-SET AT THE FACTORY – DO NOT ADJUST ABOVE RPM SPECIFICATIONS LISTED IN THE ENGINE WELDER OPERATING MANUAL.

N.A. WELDING CABLES MUST BE OF PROPER CAPACITY FOR THE CURRENT AND DUTY CYCLE OF IMMEDIATE AND FUTURE APPLICATIONS. SEE OPERATING MANUAL.
N.B. SET THE WIRE FEEDER VOLTMETER TO THE "+" POSITION. THE POSA-START FEATURE WILL NOT OPERATE UNLESS THIS SWITCH IS SET TO MATCH THE POLARITY OF THE ELECTRODE CABLE.
N.C. POSITION THE MODE SWITCH TO "CV-WIRE".

10-27-2000

S24787-10

VANTAGE 300 WIRING DIAGRAM CODE 12384, 12508

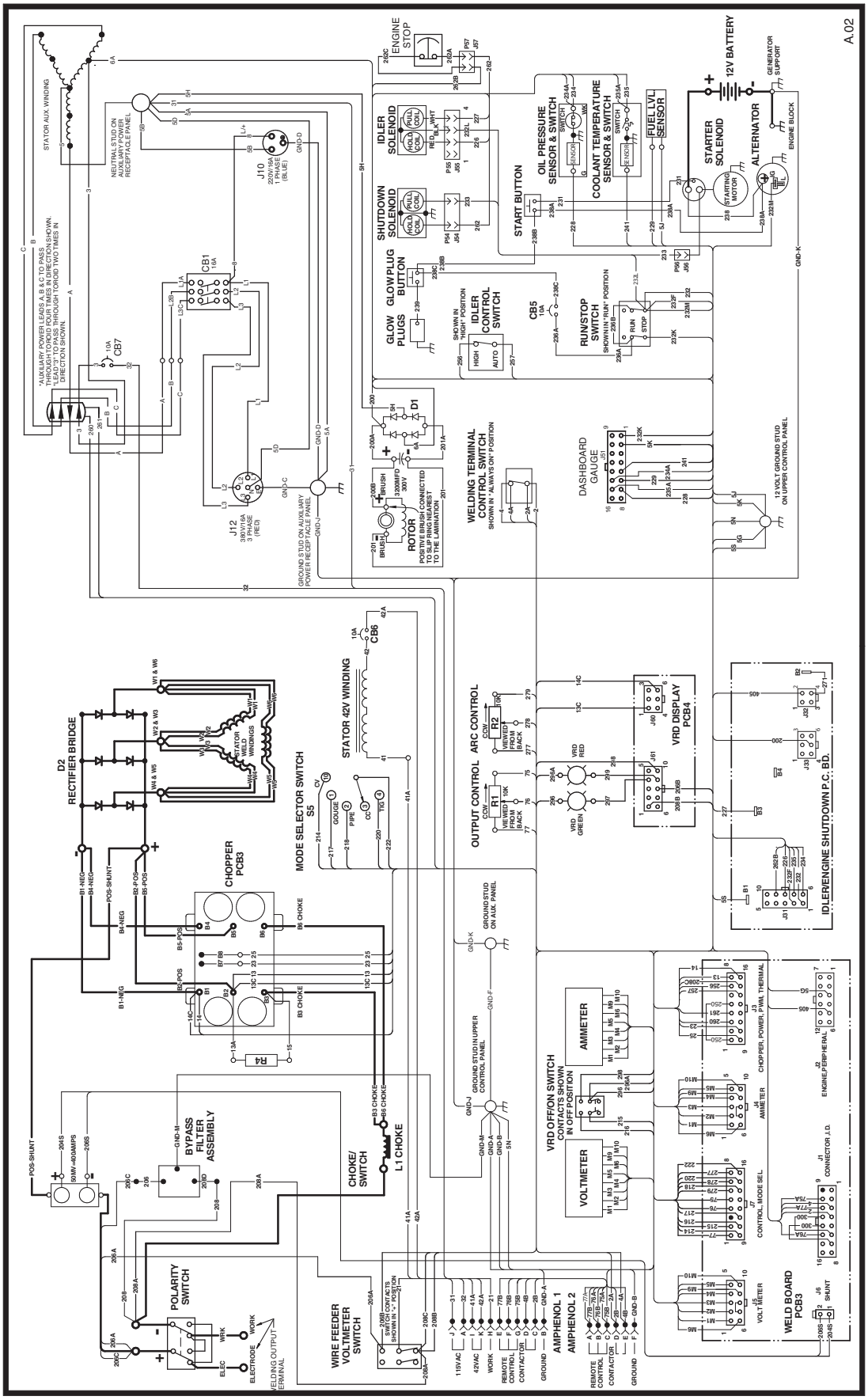

NOTE: This diagram is for reference only. It may not be accurate for all machines covered by this manual. The specific diagram for a particular code is incuded with the machine. If the diagram is illegible, write to the Service Department for a replacement. Give the equipment code number.

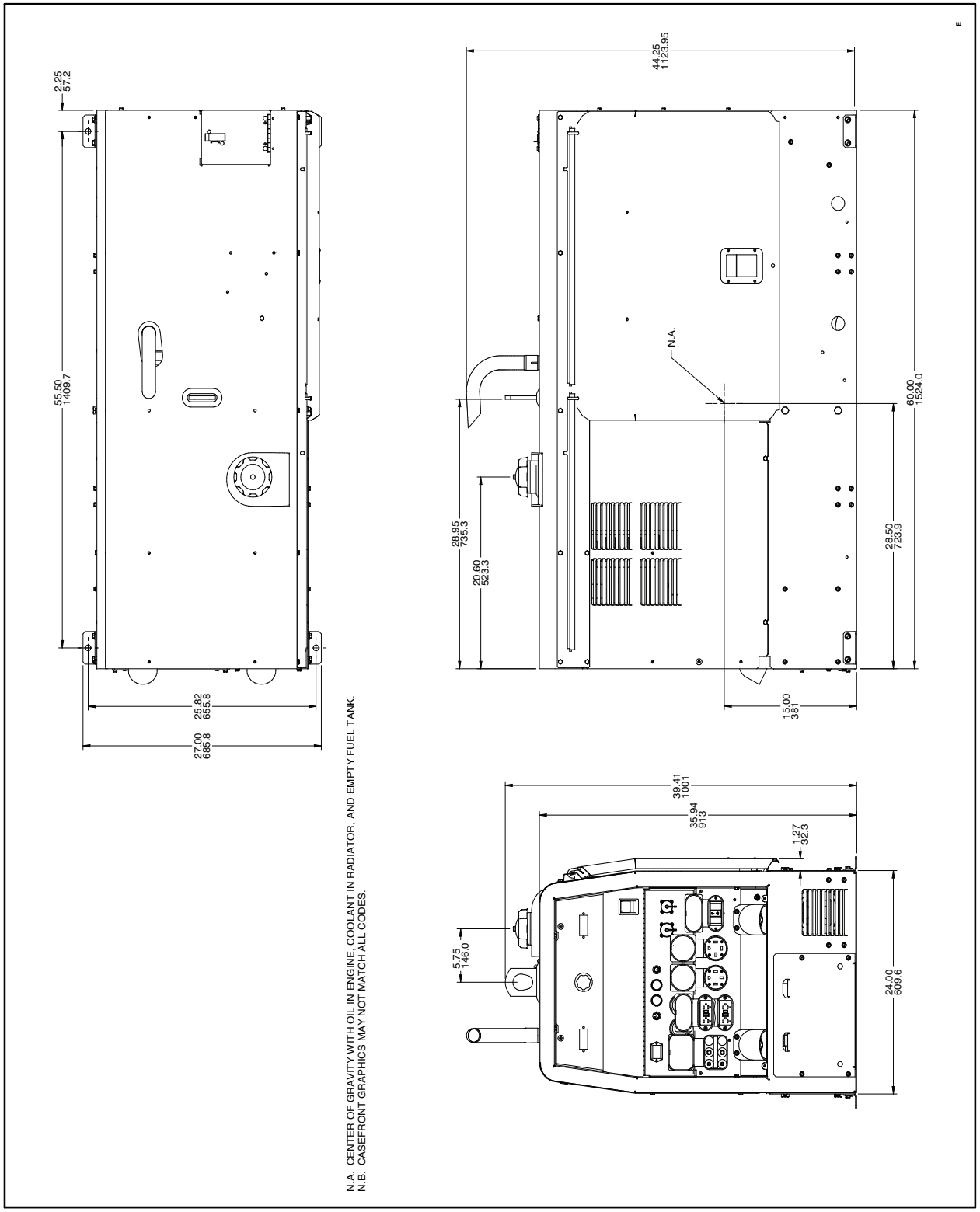

N.A. CENTER OF GRAVITY WITH OIL IN ENGINE, COOLANT IN RADIATOR, AND EMPTY FUEL TANK.
N.B. CASEFRONT GRAPHICS MAY NOT MATCH ALL CODES.

THIS PAGE INTENTIONALLY LEFT BLANK

Index of Sub Assemblies - 12508

KEY	PART NUMBER	DESCRIPTION	QTY
	P-892-A	Index of Sub Assemblies	AR
1	P-892-C	Case Front & Control Panel Assembly	AR
2	P-892-D	Output Panel Assembly	AR
3	P-892-E	Power Module Panel Assembly	AR
4	P-892-F	Generator & Rotor Assembly	AR
5	P-892-G	Base Fuel Tank & Battery Assembly	AR
6	P-892-H	Engine Assembly	AR
7	P-892-J	Case Back & Radiator Asbly	AR
8	P-892-K	Enclosure Components	AR

Printed 09/22/2015 at 13:19:34. Produced by Enigma.

Index of Sub Assemblies - 12508

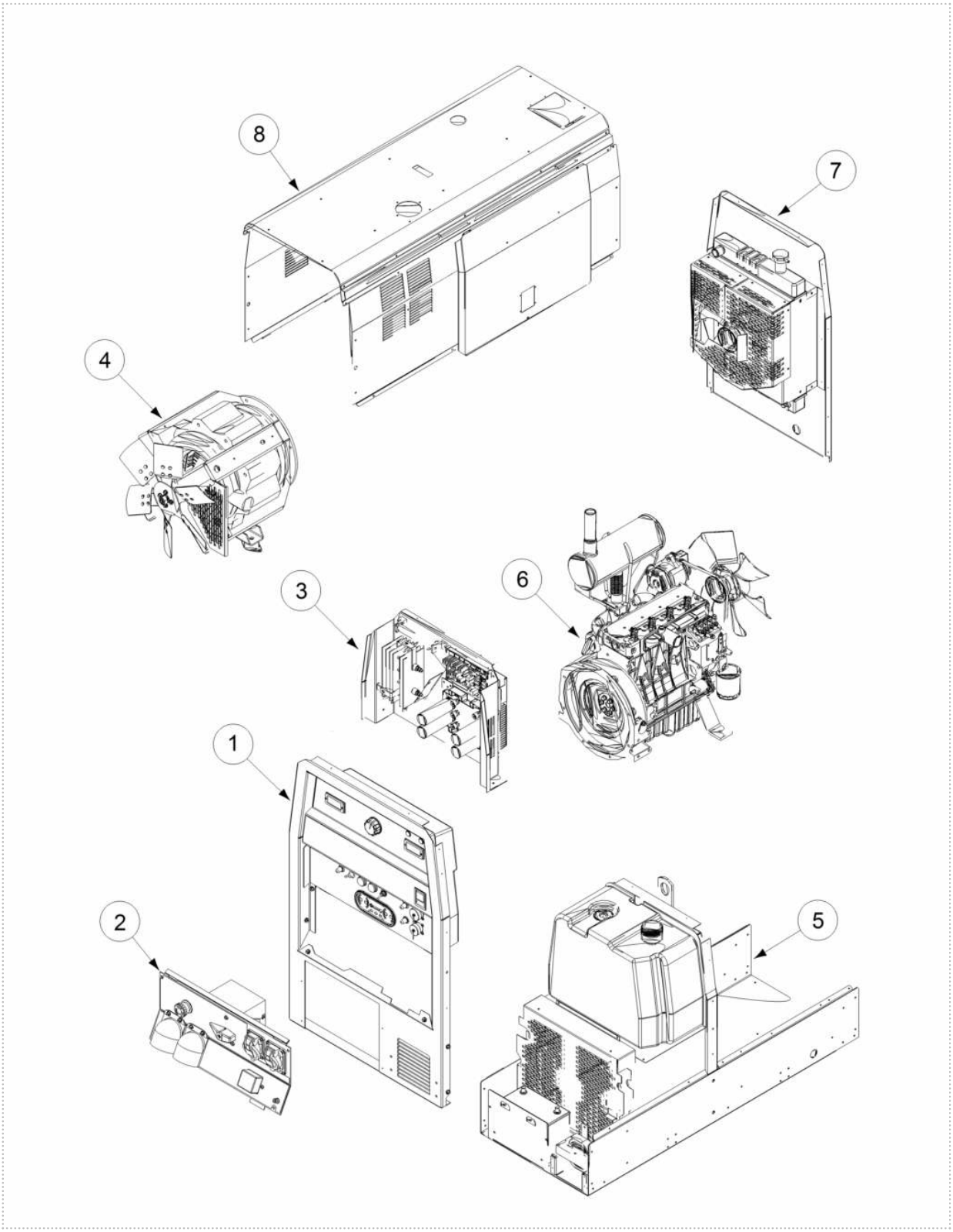

P-892-A.jpg

Printed 09/22/2015 at 13:19:34. Produced by Enigma.

Case Front & Control Panel Assembly

KEY	PART NUMBER	DESCRIPTION	QTY
	9SG4982-44	Control Panel Assembly	1
1	9SG4867-8	Control Panel	1
	9SS9262-27	PLAIN WASHER	2
	9SCF000010	#10-24HN	1
21D	9SE106A-1	LOCKWASHER	1
	9SM19685-17	CONNECTOR & LEAD ASBLY	1
5B	9SM22778-3	KNOB	1
5C	9SM22778-2	KNOB 1.5"	2
	9SM19685-8	CONNECTOR & LEAD ASBLY	1
6B	9SS12021-70	BOX RECEPTACLE SOLID SHELL	1
6C	9SS12021-68	CONNECTOR	1
6D	9SS17062-10	CABLE CONNECTOR CAP	1
6E	9SS17062-11	CABLE CONNECTOR CAP	1
6F	9SS8025-96	SELF TAPPING SCREW	8
7	9SM22859	DASHBOARD GAUGE	1
11A	9SS24659	CATCH BRACKET	1
11B	9SS8025-98	SELF TAPPING SCREW	2
13A	9ST10800-36	SWITCH-TOGGLEDPDT	1
17B	9SS22061-4	SEALING BOOT	1
14	9SS13146-4	SWITCH-PUSH BUTTON	1
15	9SS13146-1	START BUTTON	1
16A	9ST10800-38	SWITCH-TOGGLE	2
17B	9SS22061-4	SEALING BOOT	1
34	9ST10800-39	SWITCH-TOGGLE	1
17B	9SS22061-4	SEALING BOOT	1
38	9SG8353	DECAL CARRIER	1
19A	9SG7637-3	WELD CONTROL PC BD ASBLY	1
	9SS8025-100	SELF TAPPING SCREW	4
19C	9SL11924-1	PC BD MOUNTING BRKT	1
37B	9ST9187-13	#10-24HLN-1817/1-NYLON INSERT	4
	9SG8337	Wiring Harness	1
21A	9ST13637-5	DIODE-BRIDGE35A800VF-W1-PH	1
21B	9SS10773-7	INSULATING WASHER	1
30H	9SS9262-3	PLAIN WASHER	4

Printed 09/22/2015 at 13:19:34. Produced by Enigma.

Case Front & Control Panel Assembly

KEY	PART NUMBER	DESCRIPTION	QTY
21D	9SE106A-1	LOCKWASHER	1
	9SCF000010	#10-24HN	1
	K2467-1	Digital Weld Meter Kit	1
30A	9SL11160	METER HOUSING ASBLY	2
	9SS24630	METER HOUSING SEAL	2
30E	9SM19368	METER BEZEL	2
30F	9ST14807-9	FILTER LENS	2
30G	9SCF000389	#4-40X.375SS-PPNHS-FULL-GR2-3147	4
30H	9SS9262-3	PLAIN WASHER	4
30J	9SCF000005	#6-32HN	4
	9SM21328-27	DOOR DECAL & LATCH ASBLY	1
31B	9SL12440	FLIP DOWN DOOR ASBLY	1
38	9SG8353	DECAL CARRIER	1
31D	9SS25569	DOOR PADDLE LATCH	1
	9SS9225-68	THREAD FORMING SCREW (CUTTING)	4
34	9ST10800-39	SWITCH-TOGGLE	1
35	9SS24691	PILOT LIGHT & TERMINAL	1
36	9ST13534-3	PILOT LIGHT	1
37A	9SG4407-2	OCV INDICATOR PCB ASBLY	1
37B	9ST9187-13	#10-24HLN-1817/1-NYLON INSERT	4
38	9SG8353	DECAL CARRIER	1
	9SM19685-11	CONNECTOR & LEAD ASBLY	1
41A	9ST12287-20	CIRCUIT BREAKER-10A250VAC	2
41B	9SS22061-3	SEALING BOOT	2
	9SS9225-68	THREAD FORMING SCREW (CUTTING)	4
	9SL13117-4	Case Front & Insert Asbly	1
45A	9SG4865-4	Case Front	1
	9SS9225-68	THREAD FORMING SCREW (CUTTING)	4
45C	9SG4870	CASEFRONT INSERT	1
	9SS9225-68	THREAD FORMING SCREW (CUTTING)	4
46	9SG6048-4	Shield	1
	9SM17238	INSTRUCTION TAG	1

Printed 09/22/2015 at 13:19:34. Produced by Enigma.

Case Front & Control Panel Assembly

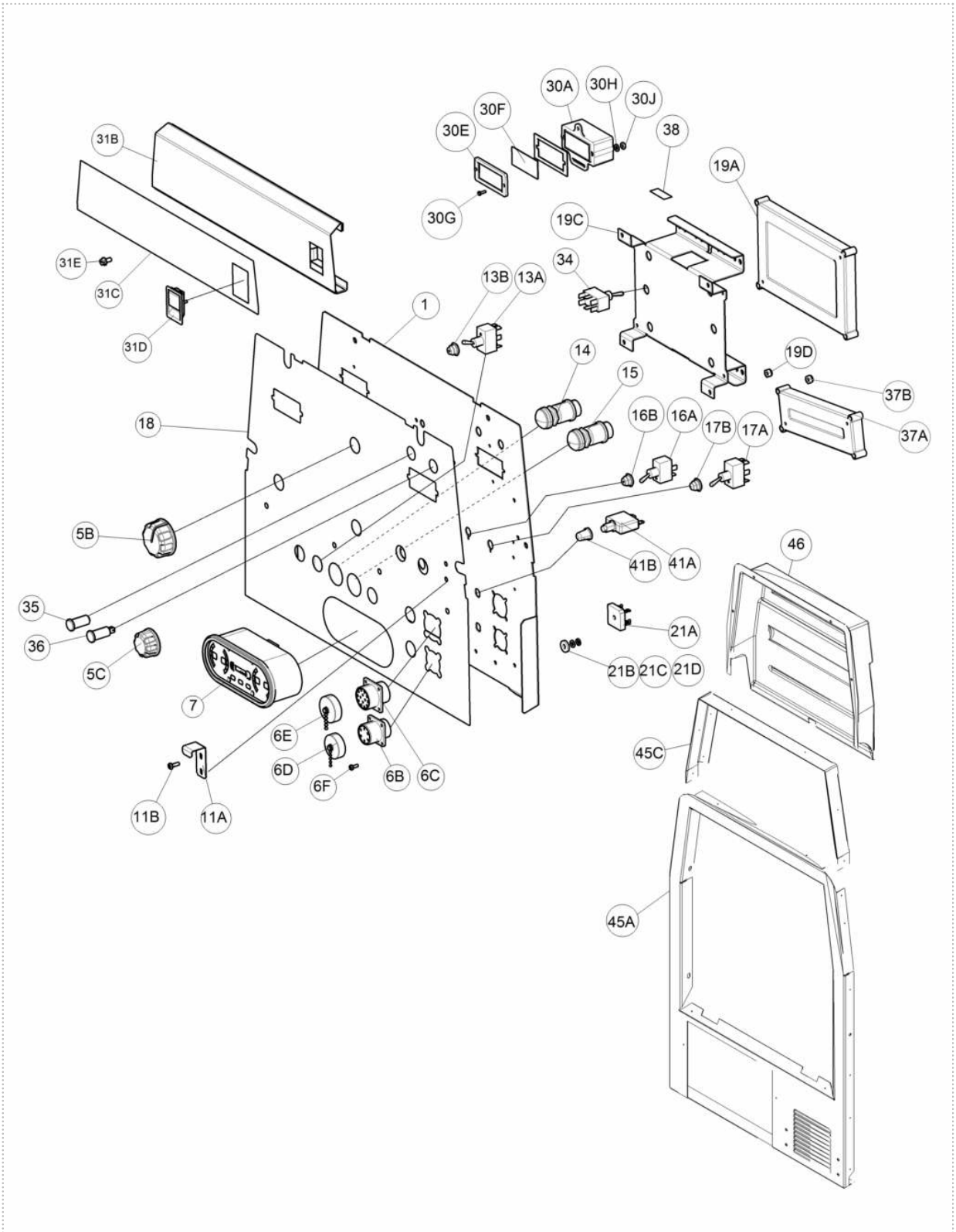

P-892-C.jpg

Printed 09/22/2015 at 13:19:34. Produced by Enigma.

Output Panel Assembly

KEY	PART NUMBER	DESCRIPTION	QTY
	9SG4983-49	Output Panel Assembly	1
1	9SG4866-18	Output Panel	1
2	9SM13900	OUTPUT TERMINAL ASBLY	2
3	9SS8025-91	SELF TAPPING SCREW	4
4	9SM20007	OUTPUT STUD COVER	2
5	9SS25669	OUTPUT STUD COVER PLATE	2
6	9SS9225-68	THREAD FORMING SCREW (CUTTING)	4
7	9ST9187-1	1/4-20HJLN	1
8	9SCF000017	1/4-20HN	1
9	9SS9262-27	PLAIN WASHER	3
10	9SE106A-1	LOCKWASHER	3
11	9SCF000010	#10-24HN	6
13	9SM20152-4	PLUG OUTLET	1
14	9SM20152-3	RECEPTACLE-230V	1
15	9SM20194-2	Circuit Breaker	1
16	9SG7594-2	BOOT	1
17	9SM22867	PARALLEL SWITCH	1
18	9SS28387-4	CIRCUIT BREAKER STRAP	1
19	9SS21130-50	PUSH BUTTONE-STOP IDEC 4NC	1
20	9ST14731-38	METRIC HEX HD SCREW-M6 X1.0	3
21	9SS9225-63	THREAD FORMING SCREW (CUTTING)	10
44	9SG8353	DECAL CARRIER	1
44	9SG8353	DECAL CARRIER	1

Printed 09/22/2015 at 13:19:34. Produced by Enigma.

Output Panel Assembly

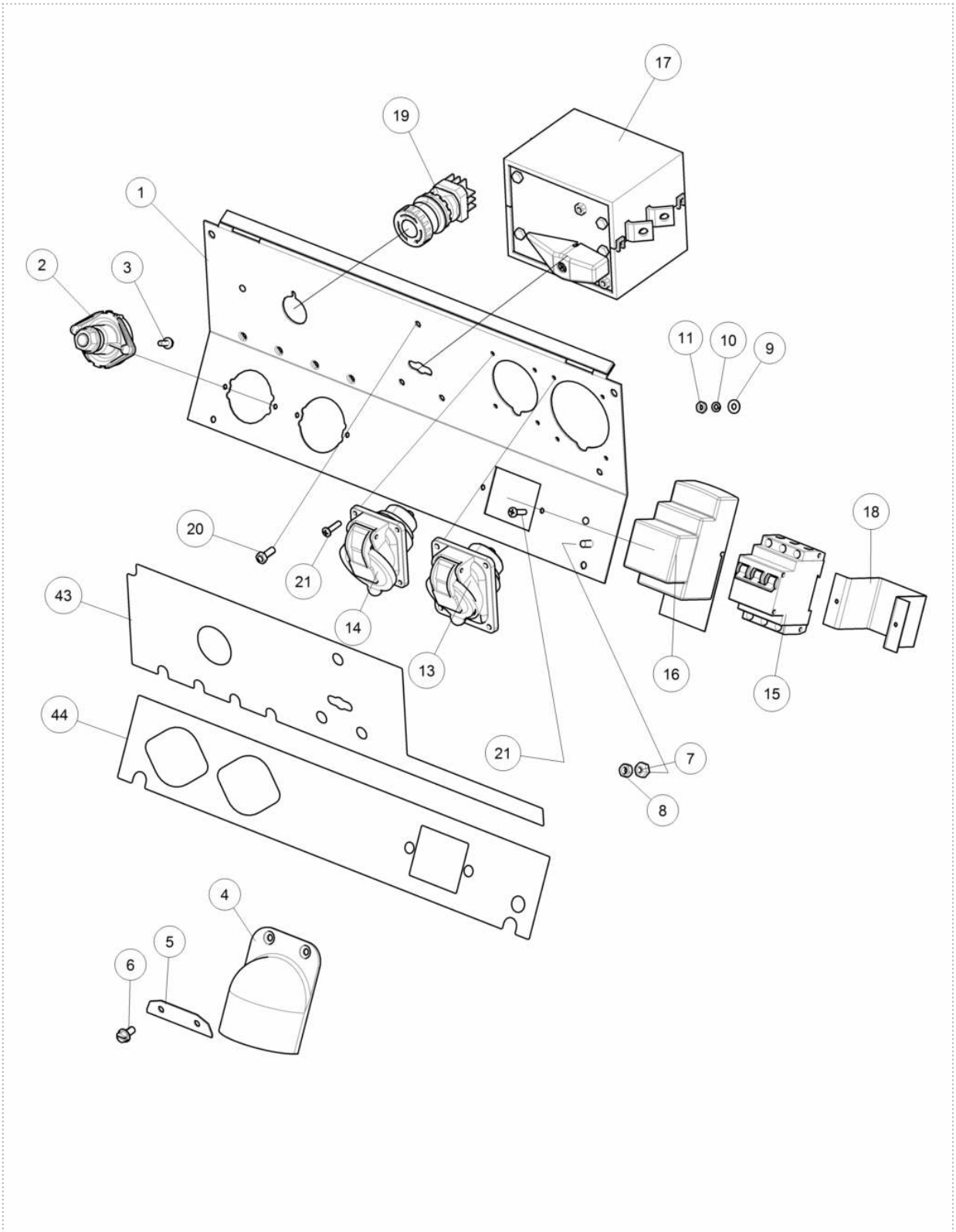

P-892-D.jpg

Printed 09/22/2015 at 13:19:34. Produced by Enigma.

Power Module Panel Assembly

KEY	PART NUMBER	DESCRIPTION	QTY
	9SG5011-3	Power Module Panel	1
1	9SG4930-1	POWER MODULE PANEL	1
2A	9SG4932-1	FUEL TANK FRONT PANEL	1
	9SS9225-68	THREAD FORMING SCREW (CUTTING)	4
3	9ST12380-4	BUSHING	1
4A	9SS26006	CHOPPER BRACKET	2
	9SS9225-68	THREAD FORMING SCREW (CUTTING)	4
5	9SL11497-2	CHOPPER HEAT SINK & PC BD ASBLY	1
5A	9SCF000014	1/4-20X.75HHCS	4
5B	9SE106A-2	LOCKWASHER	4
7A	9SS10404-138	RESISTOR-WW100W505%	1
7B	9SCF000191	#10-24X7.50RHS	1
7C	9SS9262-27	PLAIN WASHER	2
	9SE106A-1	LOCKWASHER	1
7E	9SCF000010	#10-24HN	1
8A	9SS22168	HEAT SINK HOLDER	2
8B	9SS9225-45	THREAD FORMING SCREW	2
9A	9SL11132-2	THREE PHASE BRIDGE RECTIFIER	1
	9SS9262-121	PLAIN WASHER	2
	9SE106A-14	LOCKWASHER	2
	9SS9225-68	THREAD FORMING SCREW (CUTTING)	4
15A	9SL12400-3V1	IDLER/ENGINE SHUTDOWN PC BD ASBLY	1
	9SS8025-100	SELF TAPPING SCREW	4

Printed 09/22/2015 at 13:19:34. Produced by Enigma.

Power Module Panel Assembly

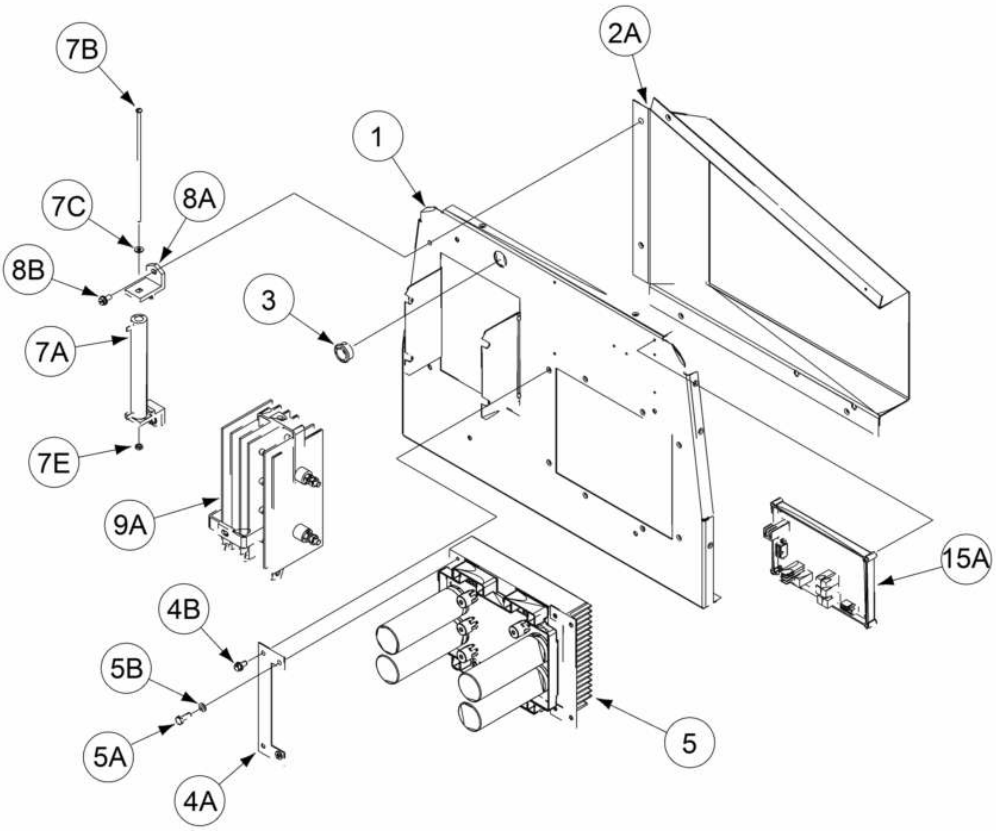

P-892-E.jpg

Printed 09/22/2015 at 13:19:34. Produced by Enigma.

Generator & Rotor Assembly

KEY	PART NUMBER	DESCRIPTION	QTY
	9SL10742-38	Generator Assembly	1
1A	9SG3088-37	Stator Tie Bar Welded Assembly	1
	9SL13110-1	Rotor & Coupling Disc Asbly	1
2A	9SL10501-5	ROTOR & SHAFT ASBLY	1
2B	9SM20555	COUPLING DISC	1
2C	9SS14233	COUPLING CLAMP RING-INSIDE	1
2E	9ST8833-2	HEX HD CAP SCREW	8
2F	9SE106A-8	LOCKWASHER	8
3A	9SS22657	FAN COUPLE	1
3B	9SCF000025	3/4-10HN	1
3C	9SE106A-7	LOCKWASHER	1
4A	9SL9551	FAN BLADE	1
4B	9SS9225-22	THREAD FORMING SCREW (ROLLING)	4
9C	9SE106A-14	LOCKWASHER	6
5A	9SM9300-85	BEARING	1
5B	9SS18044-5	TOLERANCE RING	1
9A	9SS17895	DISC CLAMPING BAR	6
9B	9ST8833-47	5/16-18 X .875 HHCS	6
9C	9SE106A-14	LOCKWASHER	6
	9ST8833-52	HEX HD CAP SCREW	8
	9SE106A-16	LOCKWASHER	2
	9ST8833-62	HEX HD CAP SCREW	2
	9SE106A-16	LOCKWASHER	2
	9SS9262-120	PLAIN WASHER	2
	9SM21315	BRUSH HOLDER & BRACKET ASBLY	1
20A	9SM18323	BRUSH HOLDER BRKT	1
20B	9SM16158	BRUSH & BRUSH HOLDER ASBLY	1
	9SG2114	BRUSH HOLDER CARTRIDGE	1
	9SS19480	BRUSH ASBLY	2
	9SM16157	BRUSH ASBLY RETAINER	1
20C	9ST12380-4	BUSHING	1
	9SS9225-68	THREAD FORMING SCREW (CUTTING)	2

Printed 09/22/2015 at 13:19:34. Produced by Enigma.

Generator & Rotor Assembly

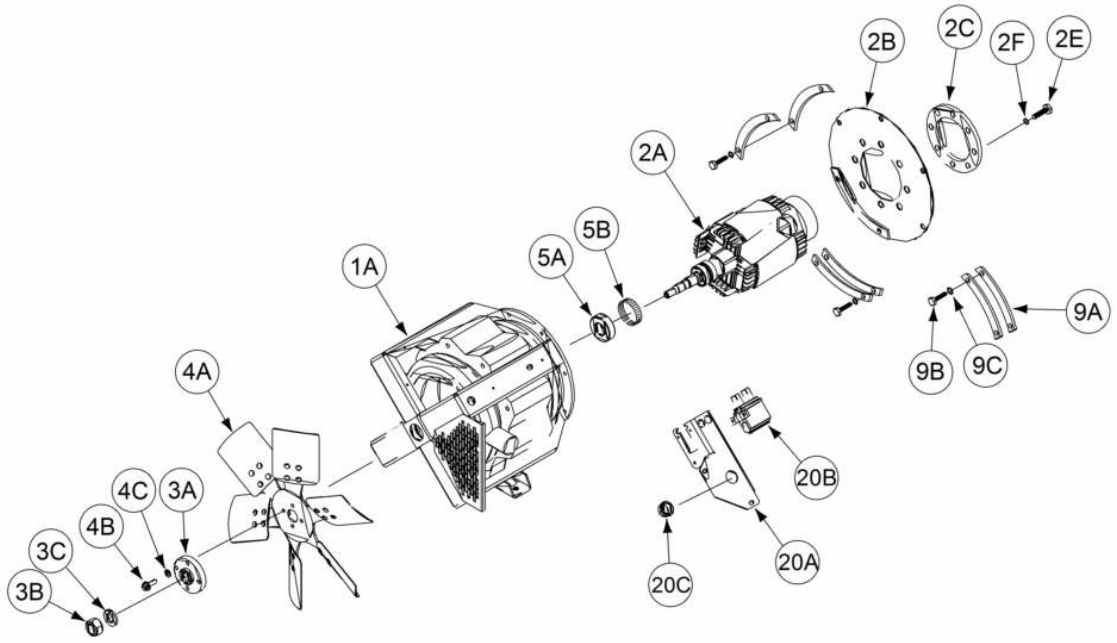

P-892-F.jpg

Printed 09/22/2015 at 13:19:34. Produced by Enigma.

Base, Fuel Tank & Battery Assembly

KEY	PART NUMBER	DESCRIPTION	QTY
1	9SG4900-4	BASE	1
2A	9SM20610	MOUNTING BRACKET	4
	9SS9225-64	SELF TAPPING SCREW	1
3A	9SL12454-12	SUPPORT	1
	9SS9225-64	SELF TAPPING SCREW	1
3C	9SL12454-11	STATOR SUPPORT	1
5A	9ST11991-3	RUBBER MOUNTING	4
	9SS9225-64	SELF TAPPING SCREW	1
6	9SS8070-51	BATTERY CABLE (NEGATIVE)	1
	9SS9225-64	SELF TAPPING SCREW	1
	9SG6071	FUEL TANK ASSEMBLY	1
12A	9SG6058	Fuel Tank	1
12B	9SS20541	FUEL CAP	1
12C	9SL12505	FUEL SENDER	1
12D	9SS19564-1	FUEL FITTING (PUSH-IN)	1
12E	9SS19563	RUBBER PLUG	2
12F	9SS19564-5	FUEL FITTINGPUSH-IN	1
	9SL13304	FUEL TANK TRAY	1
	9SM21314-1	Choke & Bracket Assembly	1
14A	9SM19416-1	CHOKE ASBLY	1
14B	9SM20547	CHOKE BRACKET	1
14C	9SCF000187	5/16-18X2.50HHCS	2
14D	9SS9262-121	PLAIN WASHER	2
14E	9SE106A-14	LOCKWASHER	2
14F	9SCF000029	5/16-18HN	2
36B	9SS9225-68	THREAD FORMING SCREW (CUTTING)	2
	9SL8904-5	BATTERY & HOLD DOWN ASBLY	1
15A	9SM9399-11	Battery	1
15B	9SM20535	BATTERY TRAY	1
15C	9SS22018	BATTERY BRKT	1
15D	9ST11827-31	CARRIAGE BOLT	2
15E	9ST9187-6	LOCKNUT	2
15F	9ST14654	CAP-PLASTIC	1
36B	9SS9225-68	THREAD FORMING SCREW (CUTTING)	2

Printed 09/22/2015 at 13:19:34. Produced by Enigma.

Base, Fuel Tank & Battery Assembly

KEY	PART NUMBER	DESCRIPTION	QTY
15H	9SS8070-47	BATTERY CABLE	1
15J	9SS20191-1	BATTERY TERMINAL COVER	1
18A	9ST10642-320	FLEX TUBE	1
18B	9SS10888-35	HOSE CLAMP	2
19A	9ST10642-229	FLEX TUBE	1
19B	9ST13777-1	HOSE CLAMP	As req
20A	9SG6084	LIFT BALE FRAME	1
	9ST8833-24	HEX HD CAP SCREW	4
	9SE106A-15	LOCKWASHER	4
	9SCF000027	1/2-13HN	4
21A	9SS10227-61	LIFT BALE	1
	9ST8833-24	HEX HD CAP SCREW	4
	9SE106A-15	LOCKWASHER	4
	9SCF000027	1/2-13HN	4
27A	9SL12458-1	FAN GUARD	1
27B	9SL12485	STATOR FAN SHROUD	1
36B	9SS9225-68	THREAD FORMING SCREW (CUTTING)	2
27D	9SL15862-1	MEGA BYPASS/VRD STABILIZER PC BD ASBLY	1
27E	9SS14020-3	PLASTIC EXPANSION NUT	3
27F	9SS8025-97	SELF TAPPING SCREW	3
27G	9SS13490-171A	FILTER CAPACITOR	1
27H	9SS22747	CAPACITOR BRKT ASBLY	1
36B	9SS9225-68	THREAD FORMING SCREW (CUTTING)	2
	9SS11604-65	SET SCREW	2
27L	9SM20007	OUTPUT STUD COVER	1
27M	9SS25669	OUTPUT STUD COVER PLATE	1
36B	9SS9225-68	THREAD FORMING SCREW (CUTTING)	2
30	9SS25455	OIL DRAIN DECAL	1
31	9SM16197	DECAL-WARNING	1
32	9SS17851	DECAL-CAUTION	1
34A	9SL12515-1	SIDE PANEL	1
	9SS24739-27	1/4X.75 TEK SCREW	3
35A	9SL12457	SUPPORT RAIL	2
36B	9SS9225-68	THREAD FORMING SCREW (CUTTING)	2

Printed 09/22/2015 at 13:19:34. Produced by Enigma.

Base, Fuel Tank & Battery Assembly

KEY	PART NUMBER	DESCRIPTION	QTY
36A	9SM20612	CONTAINER BRACKET	1
36B	9SS9225-68	THREAD FORMING SCREW (CUTTING)	2

Printed 09/22/2015 at 13:19:34. Produced by Enigma.

Base, Fuel Tank & Battery Assembly

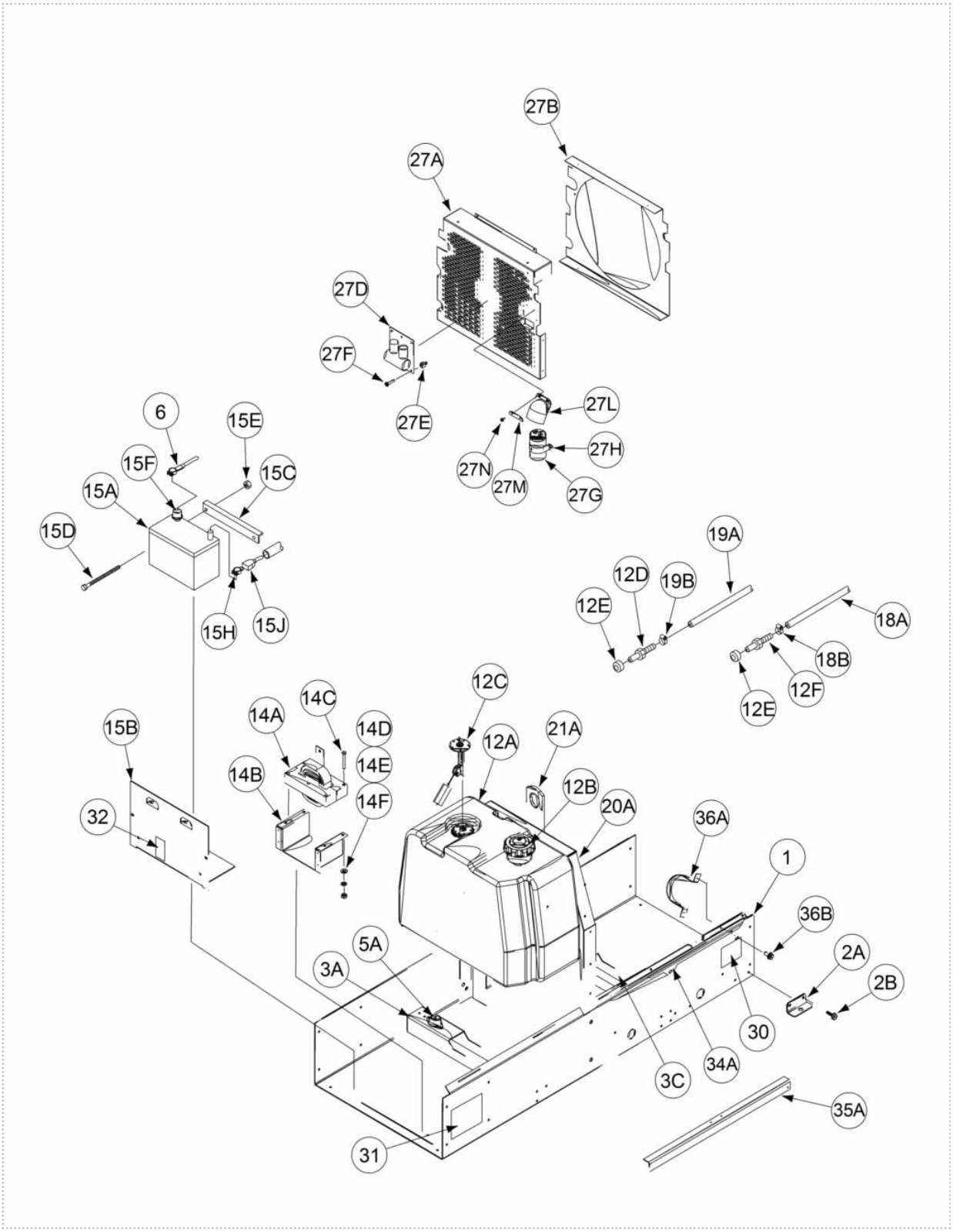

P-892-G.jpg

Printed 09/22/2015 at 13:19:34. Produced by Enigma.

Engine Assembly

KEY	PART NUMBER	DESCRIPTION	QTY
	9SG7672	Engine Assembly	1
1A	9SM22815	Engine	1
2A	9SG5354	MUFFLER ASBLY	1
	9SS30694-5	EXHAUST GASKET	1
2D	9SL15770	MUFFLER BRACKET	1
	9SCF000019	3/8-16X1.00HHCS 10	2
	9SE106A-16	LOCKWASHER	2
	9SS9262-120	PLAIN WASHER	2
	9SCF000067	3/8-16HN	2
3A	9SS17026-1	PRESSURE SENDER	1
3B	9SS24464-2	PIPE ADAPTOR	1
4A	9SS25162	SWITCH WATER	1
4B	9SS25979	PIPE ADAPTER	1
5A	9SL12512	ENGINE FOOT	2
	9ST14731-30	METRIC HEX HD SCREW-M10 X 1.25	4
	9SS17400-1	LOCKWASHER-METRIC	4
6A	9SM20598	SOLENOID BRACKET	1
	9SCF000028	5/16-18X1.25HHCS	1
	9SCF000029	5/16-18HN	2
	9SS9262-121	PLAIN WASHER	2
	9SE106A-14	LOCKWASHER	1
7A	9SS20140-4	SOLENOID ASBLY	1
	9SS9225-68	THREAD FORMING SCREW (CUTTING)	2
7C	9SS22070	IN-LINE SWIVEL	1
	9SCF000060	1/4-28HJN	1
7E	9SS22232	ROD END SWIVEL	1
	9SCF000015	1/4-20X1.00HHCS	1
	9SE106A-2	LOCKWASHER	1
	9SCF000017	1/4-20HN	1
8A	9SS30694-2	IN-LINE FUEL FILTER	1
8B	9SS15286-1	CLAMP	1
	9SS9225-64	SELF TAPPING SCREW	1
	9SS9225-66	SELF TAPPING SCREW	1
	9ST10642-229	FLEX TUBE	1

Printed 09/22/2015 at 13:19:34. Produced by Enigma.

Engine Assembly

KEY	PART NUMBER	DESCRIPTION	QTY
	9ST13777-1	HOSE CLAMP	1
10A	9SM20587	UPPER RADIATOR HOSE	1
	9SS10888-44	HOSE CLAMP	1
	9SM20588	LOWER RADIATOR HOSE	1
	9SS10888-44	HOSE CLAMP	1
12A	9SM20061	AIR INTAKE HOSE	1
	9SS10888-29	HOSE CLAMP	1
13A	9SS24662	OIL DRAIN VALVE	1
13B	9SS25362-1	HOSE NIPPLE	1
13C	9SS25362-2	HOSE NIPPLE (MALE)	1
	9ST10642-264	FLEX TUBE	1
	9SS10888-27	HOSE CLAMP	2
13G	9SS30694-1	OIL FILTER	1
	9ST8833-62	HEX HD CAP SCREW	2
	9SE106A-16	LOCKWASHER	2
	9SS9262-120	PLAIN WASHER	2
20A	9SM19801-1	AIR FILTER	1
20B	9SS25230	AIR FILTER MOUNTING BAND	1
20C	9SM20590	AIR CLEANER BRACKET	1
	9SCF000062	5/16-18X1.00HHCS	2
	9SS9262-121	PLAIN WASHER	2
	9SE106A-14	LOCKWASHER	1
	9SCF000029	5/16-18HN	2
	9SM19801-1A	OIL FILTER ELEMENT	1
	9SS9225-68	THREAD FORMING SCREW (CUTTING)	2
25A	9SS26066	WATER SEPARATOR BRKT	1
	9SS9225-68	THREAD FORMING SCREW (CUTTING)	2
	9SCF000187	5/16-18X2.50HHCS	1
	9SE106A-14	LOCKWASHER	1
	9SCF000029	5/16-18HN	2
	9ST10642-111	FLEX TUBE	1
	9ST13777-1	HOSE CLAMP	1
	9SS10888-35	HOSE CLAMP	1

Printed 09/22/2015 at 13:19:34. Produced by Enigma.

Engine Assembly

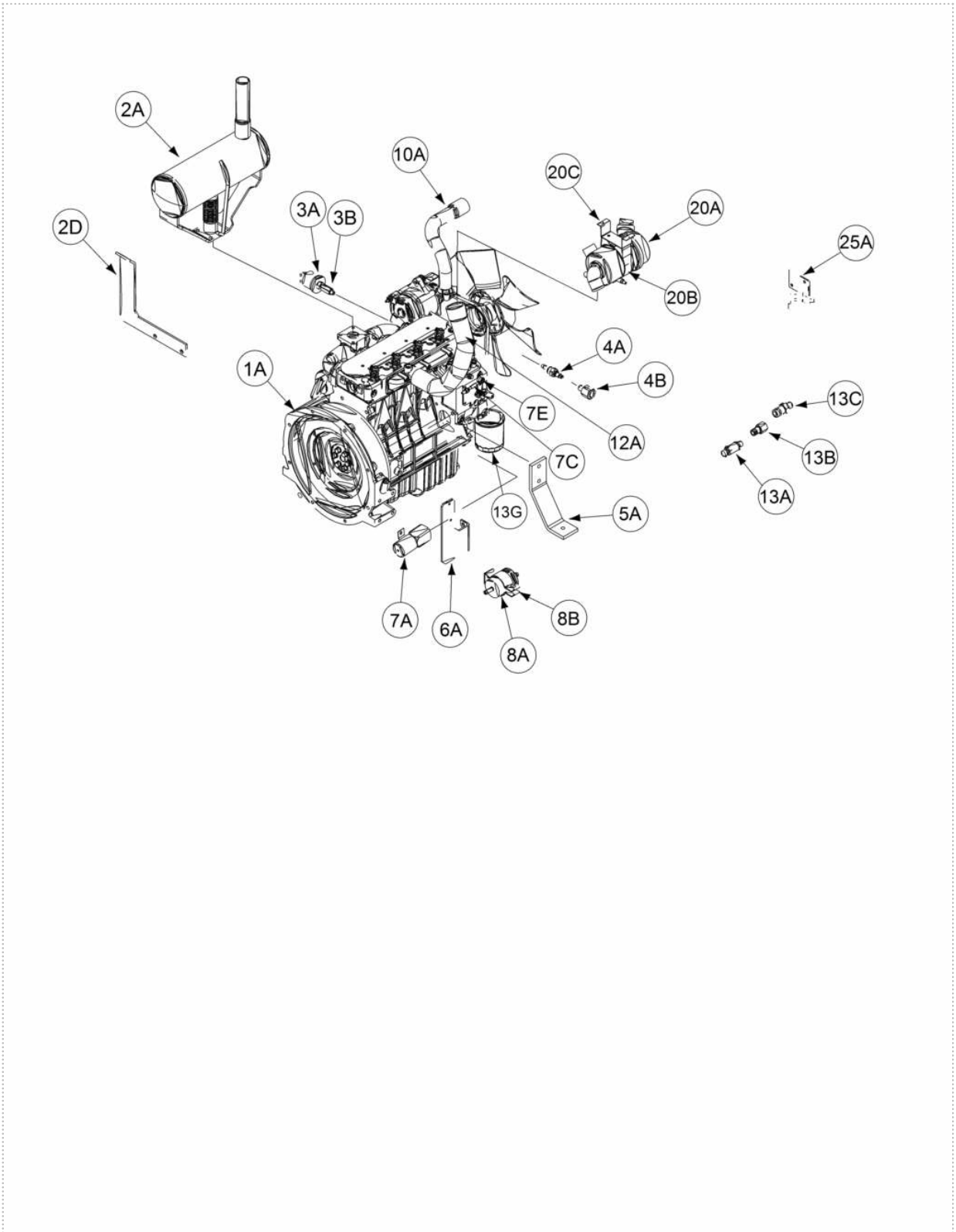

P-892-H.jpg

Printed 09/22/2015 at 13:19:34. Produced by Enigma.

Case Back & Radiator Asbly

KEY	PART NUMBER	DESCRIPTION	QTY
1	9SG4901-3	CASE BACK	1
2A	9SG3115-8	RADIATOR	1
	9SS9225-64	SELF TAPPING SCREW	4
	9SE106A-14	LOCKWASHER	4
4A	9SM20584	RADIATOR AIR BAFFLE	2
	9SS9225-68	THREAD FORMING SCREW (CUTTING)	2
5A	9SG4996-5	FAN SHROUD	1
	9SS9225-68	THREAD FORMING SCREW (CUTTING)	2
6	9ST10642-287	FLEX TUBE	1
	9ST13777-1	HOSE CLAMP	As req
	9SS9225-68	THREAD FORMING SCREW (CUTTING)	2
10A	9SG4058-6	RIGHT FAN GUARD	1
	9SS9225-68	THREAD FORMING SCREW (CUTTING)	2
11A	9SG4060-6	LEFT FAN GUARD	1
	9SS9225-68	THREAD FORMING SCREW (CUTTING)	2
15	9SG8353	DECAL CARRIER	1
	9SS26073	ENGINE SERVICE DECAL	1
17	9ST13086-62	DECAL-WARNING	1
	9ST14882	DOOR BUMPER	1
	9SS25514	COOLANT BOTTLE BRACKET	1
	9SS9225-68	THREAD FORMING SCREW (CUTTING)	2

Printed 09/22/2015 at 13:19:34. Produced by Enigma.

Case Back & Radiator Asbly

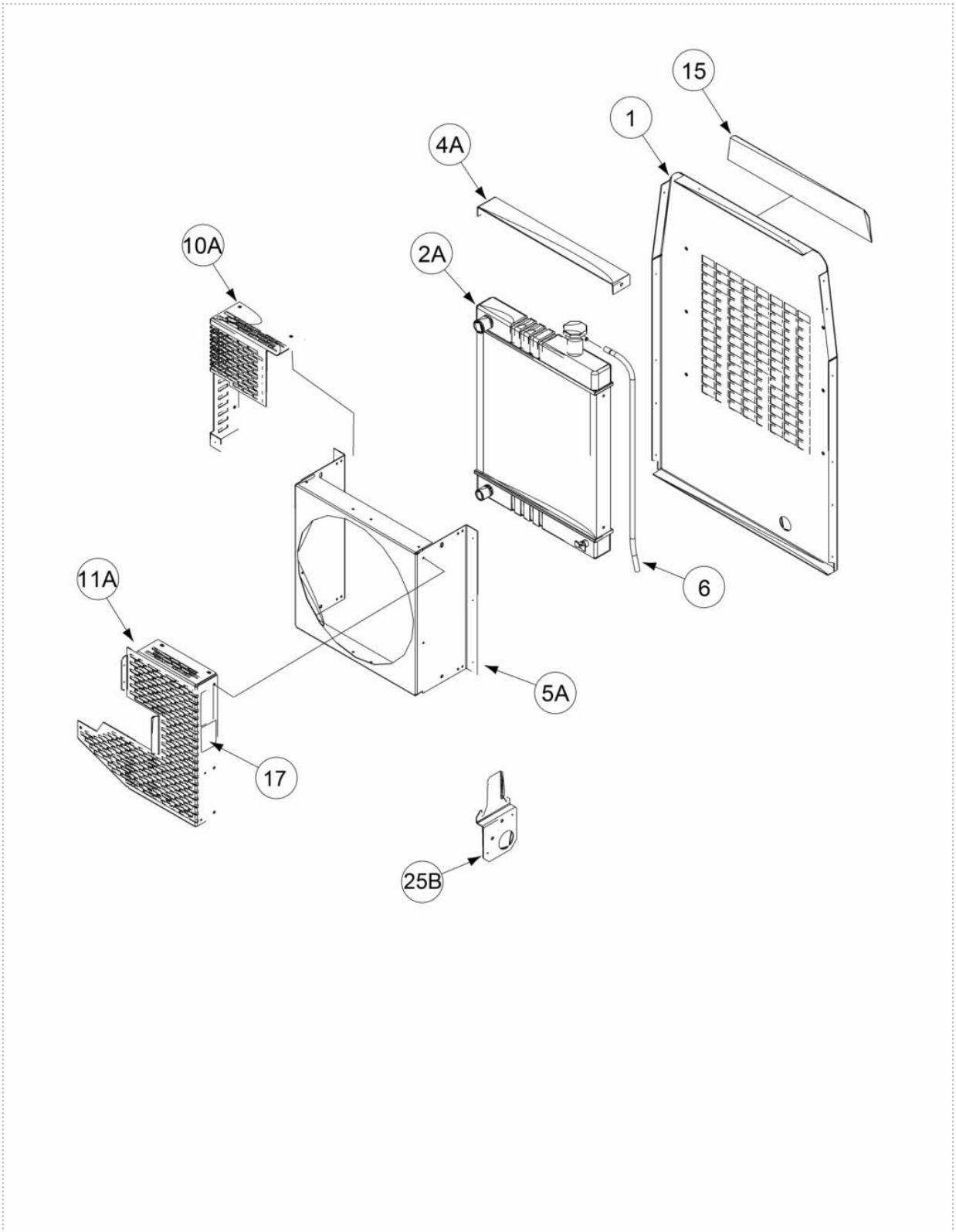

P-892-J.jpg

Printed 09/22/2015 at 13:19:34. Produced by Enigma.

Enclosure Components

KEY	PART NUMBER	DESCRIPTION	QTY
1A	9SG4902-1	ROOF	1
7B	9SS24739-27	1/4X.75 TEK SCREW	12
1C	9SL12084	FUEL TROUGH	1
1D	9ST13086-205	FUEL WARNING DECAL	1
8C	9ST12584-6	RIVET	6
1F	9ST14882-1	DOOR BUMPER	2
1G	9SS25896	DECAL-WARNING	1
	9SM20278	RADIATOR CAP COVER ASSEMBLY	1
2A	9SS25717	RADIATOR CAP COVER	1
2B	9SS21250-19	HINGE - STAINLESS STEEL	1
2C	9SS24694	LATCH	1
	9ST12584-9	RIVET	2
	9ST14882	DOOR BUMPER	2
8C	9ST12584-6	RIVET	6
3A	9SG4903	LEFT CASE SIDE	1
7B	9SS24739-27	1/4X.75 TEK SCREW	12
8G	9SM21801	FAMILY NAME LOGO	1
8F	9SS27368-6	LOGO DECAL	1
4A	9SG4904	RIGHT CASE SIDE	1
7B	9SS24739-27	1/4X.75 TEK SCREW	12
7A	9SL12516-1	DOOR SLIDE	1
7B	9SS24739-27	1/4X.75 TEK SCREW	12
7C	9SS25719-2	EDGE GUARD	2
	9SL13813	DOOR ASBLY	1
8A	9SL12513-1	Door	1
8B	9SM20241	DOOR LATCH	1
8C	9ST12584-6	RIVET	6
	9ST14882-2	DOOR BUMPER	2
	9ST14882	DOOR BUMPER	2
8F	9SS27368-6	LOGO DECAL	1
8G	9SM21801	FAMILY NAME LOGO	1
10	9SS12934-1	COVER SEAL	1
11	9SS30277-3	WARRANTY DECAL	1
12	9SM21436	CARBON MONOXIDE WARNING DECAL	1

Printed 09/22/2015 at 13:19:34. Produced by Enigma.

Enclosure Components

KEY	PART NUMBER	DESCRIPTION	QTY
13	9SS28039-3	DECAL GREEN INITIATIVE	1

Printed 09/22/2015 at 13:19:34. Produced by Enigma.

Enclosure Components

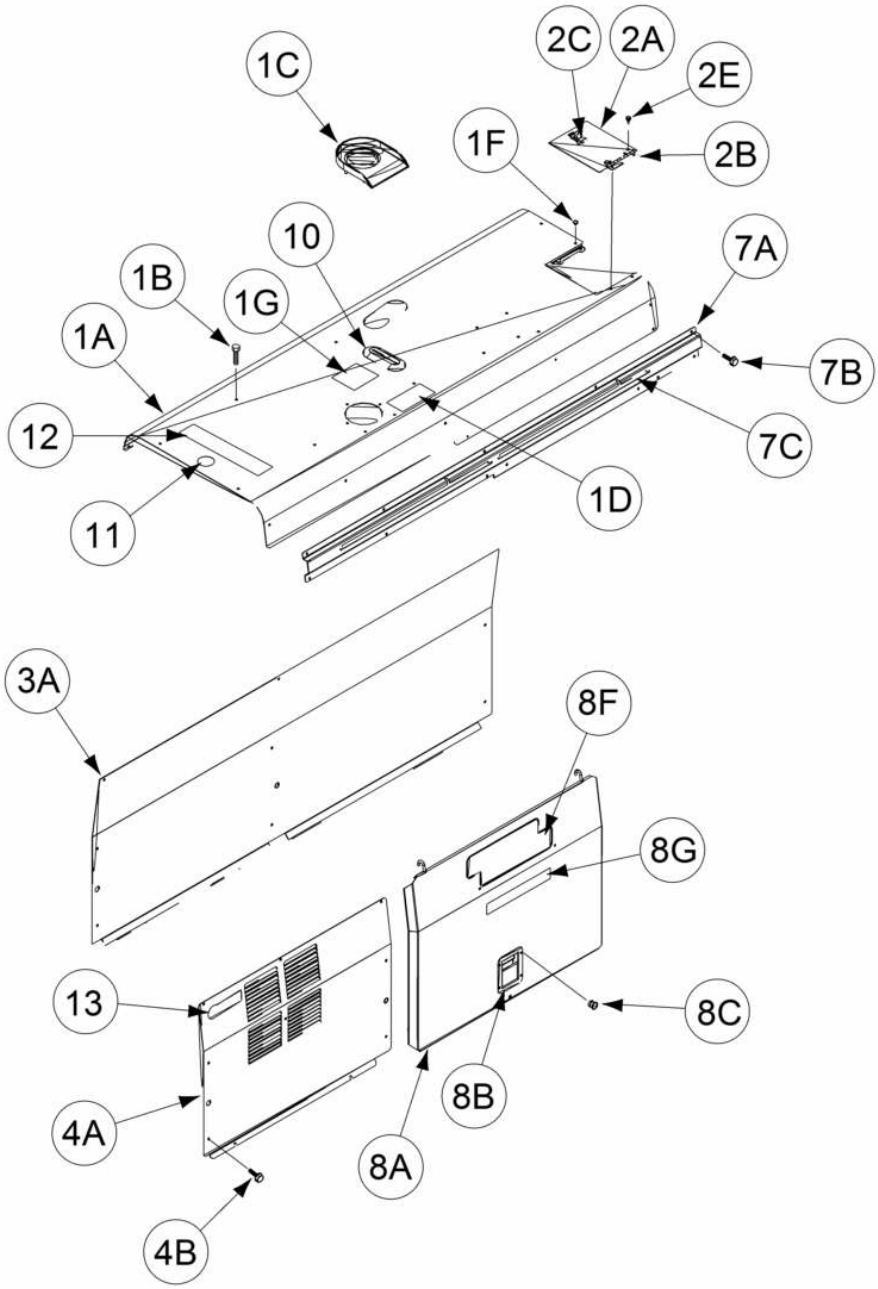

P-892-K.jpg

Printed 09/22/2015 at 13:19:34. Produced by Enigma.

WARNING	● Do not touch electrically live parts or electrode with skin or wet clothing. ● Insulate yourself from work and ground.	● Keep flammable materials away.	● Wear eye, ear and body protection.
Spanish **AVISO DE PRECAUCION**	● No toque las partes o los electrodos bajo carga con la piel o ropa mojada. ● Aislese del trabajo y de la tierra.	● Mantenga el material combustible fuera del área de trabajo.	● Protéjase los ojos, los oídos y el cuerpo.
French **ATTENTION**	● Ne laissez ni la peau ni des vêtements mouillés entrer en contact avec des pièces sous tension. ● Isolez-vous du travail et de la terre.	● Gardez à l'écart de tout matériel inflammable.	● Protégez vos yeux, vos oreilles et votre corps.
German **WARNUNG**	● Berühren Sie keine stromführenden Teile oder Elektroden mit Ihrem Körper oder feuchter Kleidung! ● Isolieren Sie sich von den Elektroden und dem Erdboden!	● Entfernen Sie brennbarres Material!	● Tragen Sie Augen-, Ohren- und Körperschutz!
Portuguese **ATENÇÃO**	● Não toque partes elétricas e electrodos com a pele ou roupa molhada. ● Isole-se da peça e terra.	● Mantenha inflamáveis bem guardados.	● Use proteção para a vista, ouvido e corpo.
Japanese **注意事項**	● 通電中の電気部品、又は溶材にヒフやぬれた布で触れないこと。 ● 施工物やアースから身体が絶縁されている様にして下さい。	● 燃えやすいものの側での溶接作業は絶対にしてはなりません。	● 目、耳及び身体に保護具をして下さい。
Chinese **警 告**	● 皮肤或濕衣物切勿接觸帶電部件及銲條。 ● 使你自己與地面和工件絶緣。	● 把一切易燃物品移離工作場所。	● 佩戴眼、耳及身體勞動保護用具。
Korean **위 험**	● 전도체나 용접봉을 젖은 헝겁 또는 피부로 절대 접촉치 마십시요. ● 모재와 접지를 접촉치 마십시요.	● 인화성 물질을 접근 시키지 마시요.	● 눈, 귀와 몸에 보호장구를 착용하십시요.
Arabic **تحذير**	● لا تلمس الاجزاء التي يسري فيها التيار الكهربائي أو الالكترود بجلد الجسم أو بالملابس المبللة بالماء. ● ضع عازلا على جسمك خلال العمل.	● ضع المواد القابلة للاشتعال في مكان بعيد.	● ضع أدوات وملابس واقية على عينيك وأذنيك وجسمك.

READ AND UNDERSTAND THE MANUFACTURER'S INSTRUCTION FOR THIS EQUIPMENT AND THE CONSUMABLES TO BE USED AND FOLLOW YOUR EMPLOYER'S SAFETY PRACTICES.

SE RECOMIENDA LEER Y ENTENDER LAS INSTRUCCIONES DEL FABRICANTE PARA EL USO DE ESTE EQUIPO Y LOS CONSUMIBLES QUE VA A UTILIZAR, SIGA LAS MEDIDAS DE SEGURIDAD DE SU SUPERVISOR.

LISEZ ET COMPRENEZ LES INSTRUCTIONS DU FABRICANT EN CE QUI REGARDE CET EQUIPMENT ET LES PRODUITS A ETRE EMPLOYES ET SUIVEZ LES PROCEDURES DE SECURITE DE VOTRE EMPLOYEUR.

LESEN SIE UND BEFOLGEN SIE DIE BETRIEBSANLEITUNG DER ANLAGE UND DEN ELEKTRODENEINSATZ DES HERSTELLERS. DIE UNFALLVERHÜTUNGSVORSCHRIFTEN DES ARBEITGEBERS SIND EBENFALLS ZU BEACHTEN.

● Keep your head out of fumes. ● Use ventilation or exhaust to remove fumes from breathing zone.	● Turn power off before servicing.	● Do not operate with panel open or guards off.	**WARNING**
● Los humos fuera de la zona de respiración. ● Mantenga la cabeza fuera de los humos. Utilice ventilación o aspiración para gases.	● Desconectar el cable de alimentación de poder de la máquina antes de iniciar cualquier servicio.	● No operar con panel abierto o guardas quitadas.	Spanish **AVISO DE PRECAUCION**
● Gardez la tête à l'écart des fumées. ● Utilisez un ventilateur ou un aspirateur pour ôter les fumées des zones de travail.	● Débranchez le courant avant l'entretien.	● N'opérez pas avec les panneaux ouverts ou avec les dispositifs de protection enlevés.	French **ATTENTION**
● Vermeiden Sie das Einatmen von Schweibrauch! ● Sorgen Sie für gute Be- und Entlüftung des Arbeitsplatzes!	● Strom vor Wartungsarbeiten abschalten! (Netzstrom völlig öffnen; Maschine anhalten!)	● Anlage nie ohne Schutzgehäuse oder Innenschutzverkleidung in Betrieb setzen!	German **WARNUNG**
● Mantenha seu rosto da fumaça. ● Use ventilação e exhaustão para remover fumo da zona respiratória.	● Não opere com as tampas removidas. ● Desligue a corrente antes de fazer serviço. ● Não toque as partes elétricas nuas.	● Mantenha-se afastado das partes moventes. ● Não opere com os paineis abertos ou guardas removidas.	Portuguese **ATENÇÃO**
● ヒュームから頭を離すようにして下さい。 ● 換気や排煙に十分留意して下さい。	● メンテナンス・サービスに取りかかる際には、まず電源スイッチを必ず切って下さい。	● パネルやカバーを取り外したままで機械操作をしないで下さい。	Japanese **注意事項**
● 頭部遠離煙霧。 ● 在呼吸區使用通風或排風器除煙。	● 維修前切斷電源。	● 儀表板打開或沒有安全罩時不準作業。	Chinese **警 告**
● 얼굴로부터 용접가스를 멀리하십시요. ● 호흡지역으로부터 용접가스를 제거하기 위해 가스제거기나 통풍기를 사용하십시요.	● 보수전에 전원을 차단하십시요.	● 판넬이 열린 상태로 작동치 마십시요.	Korean **위 험**
● ابعد رأسك بعيداً عن الدخان. ● استعمل التهوية أو جهاز ضغط الدخان للخارج لكي تبعد الدخان عن المنطقة التي تتنفس فيها.	● اقطع التيار الكهربائي قبل القيام بأية صيانة.	● لا تشغل هذا الجهاز اذا كانت الاغطية الحديدية الواقية ليست عليه.	Arabic **تحذير**

LEIA E COMPREENDA AS INSTRUÇÕES DO FABRICANTE PARA ESTE EQUIPAMENTO E AS PARTES DE USO, E SIGA AS PRÁTICAS DE SEGURANÇA DO EMPREGADOR.

使う機械や溶材のメーカーの指示書をよく読み、まず理解して下さい。そして貴社の安全規定に従って下さい。

請詳細閱讀並理解製造廠提供的説明以及應該使用的銀捍材料，並請遵守貴方的有関勞動保護規定。

이 제품에 동봉된 작업지침서를 숙지하시고 귀사의 작업자 안전수칙을 준수하시기 바랍니다.

اقرأ بتمعن وافهم تعليمات المصنع المنتج لهذه المعدات والمواد قبل استعمالها واتبع تعليمات الوقاية لصاحب العمل.

CUSTOMER ASSISTANCE POLICY

The business of The Lincoln Electric Company is manufacturing and selling high quality welding equipment, consumables, and cutting equipment. Our challenge is to meet the needs of our customers and to exceed their expectations. On occasion, purchasers may ask Lincoln Electric for advice or information about their use of our products. We respond to our customers based on the best information in our possession at that time. Lincoln Electric is not in a position to warrant or guarantee such advice, and assumes no liability, with respect to such information or advice. We expressly disclaim any warranty of any kind, including any warranty of fitness for any customer's particular purpose, with respect to such information or advice. As a matter of practical consideration, we also cannot assume any responsibility for updating or correcting any such information or advice once it has been given, nor does the provision of information or advice create, expand or alter any warranty with respect to the sale of our products.

Lincoln Electric is a responsive manufacturer, but the selection and use of specific products sold by Lincoln Electric is solely within the control of, and remains the sole responsibility of the customer. Many variables beyond the control of Lincoln Electric affect the results obtained in applying these types of fabrication methods and service requirements.

Subject to Change – This information is accurate to the best of our knowledge at the time of printing. Please refer to www.lincolnelectric.com for any updated information.

THE LINCOLN ELECTRIC COMPANY
22801 St. Clair Avenue • Cleveland, OH • 44117-1199 • U.S.A.
Phone: +1.216.481.8100 • www.lincolnelectric.com